ФЕДЕРАЛЬНОЕ АГЕНТСТВО

ПО ТЕХНИЧЕСКОМУ РЕГУЛИРОВАНИЮ И МЕТРОЛОГИИ

НАЦИОНАЛЬНЫЙ СТАНДАРТ РОССИЙСКОЙ ФЕДЕРАЦИИ

ГОСТ Р 25645.167— 2022

КОСМИЧЕСКАЯ СРЕДА (ЕСТЕСТВЕННАЯ И ИСКУССТВЕННАЯ)

Модель пространственно-временного распределения плотности потоков техногенного вещества в околоземном космическом пространстве

Издание официальное

Москва
Российский институт стандартизации
2022

gost.e-ecolog.ru

Предисловие

1 РАЗРАБОТАН Акционерным обществом «Центральный научно-исследовательский институт машиностроения» (АО «ЦНИИмаш»)

2 ВНЕСЕН Техническим комитетом по стандартизации ТК 321 «Ракетно-космическая техника»

3 УТВЕРЖДЕН И ВВЕДЕН В ДЕЙСТВИЕ Приказом Федерального агентства по техническому регулированию и метрологии от 17 февраля 2022 г. № 78-ст

4 ВЗАМЕН ГОСТ Р 25645.167—2005

*Правила применения настоящего стандарта установлены в статье 26 Федерального закона от 29 июня 2015 г. № 162-ФЗ «О стандартизации в Российской Федерации». Информация об изменениях к настоящему стандарту публикуется в ежегодном (по состоянию на 1 января текущего года) информационном указателе «Национальные стандарты», а официальный текст изменений и поправок — в ежемесячном информационном указателе «Национальные стандарты». В случае пересмотра (замены) или отмены настоящего стандарта соответствующее уведомление будет опубликовано в ближайшем выпуске ежемесячного информационного указателя «Национальные стандарты». Соответствующая информация, уведомление и тексты размещаются также в информационной системе общего пользования — на официальном сайте Федерального агентства по техническому регулированию и метрологии в сети Интернет (*gost.e-ecolog.ru

© Оформление. ФГБУ «РСТ», 2022

Настоящий стандарт не может быть полностью или частично воспроизведен, тиражирован и распространен в качестве официального издания без разрешения Федерального агентства по техническому регулированию и метрологии

Содержание

1 Область применения 1
2 Термины и определения. 1
3 Обозначения и сокращения 2
4 Общие положения 3
5 Определение плотности потока техногенного вещества относительно инерциальной системы координат 5
6 Определение потока техногенного вещества относительно космических аппаратов с типовыми орбитами. 72
7 Прогнозирование плотности потока техногенного вещества 79
Приложение А (справочное) Характеристики компьютерных программ для определения пространственно-временного распределения техногенного вещества 108
Библиография 109

НАЦИОНАЛЬНЫЙ СТАНДАРТ РОССИЙСКОЙ ФЕДЕРАЦИИ

КОСМИЧЕСКАЯ СРЕДА (ЕСТЕСТВЕННАЯ И ИСКУССТВЕННАЯ)

Модель пространственно-временного распределения плотности потоков техногенного вещества в околоземном космическом пространстве

Space environment (natural and artificial).Model of spatial and time distribution for space debris flux density in near-Earth space

Дата введения — 2022—06—01

1 Область применения

Настоящий стандарт устанавливает модель пространственно-временного распределения плотности потоков техногенного вещества размером более 10 мкм (0,01 мм) в околоземном космическом пространстве на удалении от поверхности Земли от 200 до 40 000 км в произвольный момент времени с 2020 по 2050 г.

Настоящий стандарт предназначен:

- для использования в расчетах при определении условий функционирования и полета орбитальных средств в околоземном космическом пространстве;
- разработки мероприятий по обеспечению экологической безопасности при создании и эксплуатации орбитальных средств;
- обоснования и оценки эффективности мероприятий и рекомендаций, направленных на ослабление антропогенного воздействия на околоземное космическое пространство;
- обоснования параметров и условий применения наземной и бортовой аппаратуры, предназначенной для измерения характеристик техногенного вещества в околоземном космическом пространстве.

2 Термины и определения

В настоящем стандарте применены следующие термины с соответствующими определениями:

2.1 **инерциальная система координат:** Начало системы отсчета О находится в центре масс Земли, ось OZ совпадает с осью вращения Земли и направлена к северному полюсу, ось OX направлена в точку весеннего равноденствия, а ось OY дополняет систему отсчета до правой.

2.2 **высота точки:** Расстояние от точки по нормали к поверхности Земли, где поверхность Земли принимается сферой радиусом 6371,2 км с центром в центре масс Земли.

2.3 **широта точки:** Географическая широта проекции положения космического объекта в пространстве на поверхности Земли.

2.4 **околоземное космическое пространство:** Область пространства между гомосферой Земли (линией Кармана) и сферой с радиусом, равным среднему расстоянию Луны от Земли.

2.5 **космический объект:** Объект, выведенный на орбиту вокруг Земли или дальше в космическое пространство и предназначенный для деятельности в космическом пространстве, либо фрагмент данного объекта, образовавшийся в процессе этой деятельности.

2.6 **каталогизированный космический объект:** Космический объект размером более 10 см, включенный в каталоги сопровождаемых объектов систем контроля космического пространства или других служб и организаций.

Издание официальное

2.7 **некаталогизированный космический объект:** Космический объект размером, как правило, менее 10 см, образовавшийся в процессе или после прекращения функционирования орбитальных средств в околоземном пространстве и не включенный в каталоги сопровождаемых объектов.

2.8 **техногенное вещество:** Совокупность каталогизированных и некаталогизированных космических объектов.

2.9 **концентрация техногенного вещества:** Среднее число космических объектов в единице объема (в окрестности фиксированной точки) околоземного пространства.

2.10 **поток техногенного вещества:** Среднее число космических объектов в единицу времени через некоторую заданную поверхность.

2.11 **плотность потока техногенного вещества:** Поток техногенного вещества через сферическую поверхность единичного сечения.

2.12 **статистические характеристики скорости техногенного вещества:** Функции распределения и числовые характеристики радиальной и трансверсальной составляющих скорости космических объектов, а также возможных направлений трансверсальной составляющей скорости в околоземном пространстве.

2.13 **относительная скорость сближающихся космических объектов:** Векторная разность скоростей произвольного и заданного космических объектов в момент их максимального сближения.

2.14 **средняя относительная скорость:** Среднее значение относительной скорости, полученное усреднением относительных скоростей всех космических объектов в окрестности траектории заданного космического объекта (произвольный космический объект участвует в усреднении один раз).

2.15 **средняя скорость возможных столкновений:** Среднее значение относительной скорости, полученное усреднением относительных скоростей всех космических объектов, с которыми может столкнуться заданный космический объект, то есть усреднением по множеству возможных столкновений.

2.16 **коэффициент технической политики:** Показатель интенсивности образования техногенного вещества в интервале прогноза, определяемый отношением числа ежегодно образующихся космических объектов в интервале прогноза (после 2025 г.) к соответствующей средней оценке за время с 2020 по 2025 г.

2.17 **модель пространственно-временного распределения плотности потоков техногенного вещества:** Совокупность взаимосвязанных математических и формально-логических выражений, отображающих пространственно-временное распределение плотности потоков техногенного вещества в околоземном космическом пространстве.

3 Обозначения и сокращения

3.1 В настоящем стандарте применены следующие обозначения:

h — высота точки;

φ — широта точки;

j — номер диапазона размеров космических объектов;

$p(h, \varphi)_j$ — концентрация техногенного вещества для j-го диапазона размеров космических объектов в зависимости от высоты и широты точки;

i — наклонение плоскости орбиты космических объектов;

V_τ — трансверсальная составляющая скорости космических объектов (направлена в плоскости орбиты перпендикулярно к радиусу-вектору);

$\overline{V}_\tau(h)$ — среднее значение трансверсальной составляющей скорости, полученное усреднением скоростей всех космических объектов, которые в произвольный момент времени могут находиться на данной высоте;

$V_{отн}$ — относительная скорость сближающихся космических объектов;

A — угол между трансверсальными составляющими скорости заданного космического объекта и относительной скорости произвольного космического объекта;

$pV_{отн}(A)$ — статистическая плотность распределения направления трансверсальной составляющей относительной скорости, полученная путем усреднения относительных скоростей всех космических объектов, которые находятся в окрестности траектории заданного космического объекта (произвольный космический объект участвует в усреднении один раз);

$pV_{стл}(A)$ — статистическая плотность распределения направления трансверсальной составляющей скорости возможных столкновений, полученная усреднением по множеству возможных столкновений;

$\overline{V}_{стл}$ — средняя скорость возможных столкновений космических аппаратов с техногенным веществом;

P — поток техногенного вещества;

$Q(h, \varphi)_j$ — плотность потока техногенного вещества для j-го диапазона размеров космических объектов относительно инерциальной системы координат в зависимости от высоты и широты точки;

$Q_{отн}(h, i)_j$ — плотность потока техногенного вещества для j-го диапазона размеров космических объектов относительно космического аппарата, находящегося на круговой орбите с высотой h и наклонением i;

$N(t_1, t_2)_j$ — среднее число возможных столкновений заданного космического аппарата с космическим объектом j-го диапазона размеров за время от t_1 до t_2;

S — характерная площадь поперечного сечения космического аппарата;

$F(t)$ — функция, учитывающая изменение потока техногенного вещества в интервале прогноза от начального момента времени t_1 до момента времени t;

K — коэффициент технической политики.

3.2 В настоящем стандарте применены следующие сокращения:

ВЭО — высокоэллиптическая орбита;

ГЛОНАСС — глобальная навигационная спутниковая система;

ГСО — геостационарная орбита (окрестность ГСО от 35 000 до 40 000 км);

ИСК — инерциальная система координат;

КА — космический аппарат;

КО — космический объект;

МКС — Международная космическая станция;

НОО — низкая околоземная орбита (высота от 200 до 2000 км);

ОКП — околоземное космическое пространство;

ОССС — орбита спутниковых систем связи;

СВО — средневысокая орбита (высота от 2000 до 35 000 км);

ССО — солнечно-синхронная орбита.

4 Общие положения

4.1 В соответствии с моделью пространственно-временного распределения техногенного вещества в ОКП определяют плотность потока техногенного вещества:

- относительно ИСК в начальный момент времени t_0 = 2020 г.;
- относительно КА, движущихся по типовым орбитам, в начальный момент времени t_0 = 2020 г.;
- в произвольный момент времени с 2020 до 2050 г.

4.2 Для определения пространственно-временного распределения плотности потока техногенного вещества в ОКП использованы следующие исходные данные:

- данные систем контроля ОКП по каталогизированным КО;
- сведения о разрушении КА и ступеней ракет-носителей, а также о выполнении различных операций, предусмотренных программами космических полетов;
- данные радиолокационных и оптических измерений некаталогизированных КО;
- результаты космических экспериментов по определению непосредственного воздействия техногенного вещества на конструкцию КА.

4.3 Характеристики пространственно-временного распределения техногенного вещества строились на основе данных, перечисленных в 4.2, с помощью математического моделирования техногенного засорения ОКП. Точность характеристик пространственно-временного распределения техногенного вещества определена точностью исходных данных по каталогизированным и некаталогизированным КО, а также допущениями, применяемыми при математическом моделировании.

4.4 Характеристики пространственно-временного распределения КО определяют для 11 диапазонов их размеров, приведенных в таблицах 4.1 и 4.2.

Таблица 4.1 — Классификация диапазонов размеров и средней массы КО размером не более 1 мм

Наименование показателя	Диапазон размеров j		
	1	2	3
Размеры, мм	От 0,01 до 0,10	От 0,1 до 0,5	От 0,5 до 1,0
Средняя масса, г	$2{,}4 \cdot 10^{-7}$	$3{,}9 \cdot 10^{-5}$	$6{,}2 \cdot 10^{-4}$
Плотность, г/см^3	2,2	2,3	2,4

Таблица 4.2 — Классификация диапазонов размеров и средней массы КО размером не менее 1 мм

Наименование показателя	Диапазон размеров j							
	1	2	3	4	5	6	7	8
Размеры, см	От 0,10 до 0,25	От 0,25 до 0,50	От 0,5 до 1,0	От 1,0 до 2,5	От 2,5 до 5,0	От 5 до 10	От 10 до 20	Свыше 20
Средняя масса, г	$7{,}9 \cdot 10^{-3}$	$7{,}7 \cdot 10^{-2}$	0,6	7,9	77,3	$6{,}1 \cdot 10^{2}$	$4{,}9 \cdot 10^{3}$	$3{,}0 \cdot 10^{5}$
Плотность, г/см^3	2,5	2,7	2,9	3,1	3,3	3,5	3,7	3,9

4.5 Значение функции $Q(h, \varphi)_j$, м$^{-2}$·год$^{-1}$, характеризующей плотность потока КО j-го диапазона размеров относительно ИСК в зависимости от высоты и широты точки, вычисляют в процессе математического моделирования по формуле

$$Q(h,\varphi)_j = p(h,\varphi)_j \overline{V}_\tau(h), \quad (1)$$

где $p(h, \varphi)_j$ — концентрация КО для j-го диапазона размеров в зависимости от высоты и широты точки, км$^{-3}$;

$\overline{V}_\tau(h)$ — средняя трансверсальная составляющая скорости, км/с, согласно [1].

4.6 Значения функции $Q_{отн}(h, i)_j$, м$^{-2}$ · год$^{-1}$, характеризующей плотность потока КО относительно КА для различных диапазонов размеров КО, определяют для круговых орбит КА в зависимости от высоты h, км, и наклонения i, град.

Значения $Q_{отн}(h, i)_j$ вычисляют в процессе математического моделирования усреднением мгновенных значений плотности потока, определяемых концентрацией КО и их относительной скоростью в различных точках траектории за виток.

4.7 Значения потока P_j, м$^{-2}$ · год$^{-1}$, за год для КО различных диапазонов размеров относительно КА простой формы определяют по формуле

$$P_j = SC_N Q_{отн}(h, i)_j, \quad (2)$$

где C_N — коэффициент, учитывающий форму и ориентацию КА;

S — характерная площадь сечения КА перпендикулярно направлению трансверсальной скорости КА, м^2;

$Q_{отн}(h, i)_j$ — соответствующая плотность потока, м$^{-2}$ · год$^{-1}$, по [1].

При этом используют допущение, что размеры КА существенно больше размеров КО.

Значения коэффициента C_N устанавливают для элементов конструкции КА различной формы (цилиндр, конус, панель) в виде функций углов α, град, и β, град, характеризующих ориентацию заданной оси по отношению к подвижной, связанной с рассматриваемым КА, системой координат. Для КА сферической формы принимают:

$$C_N = 1, \quad S = \frac{\pi D^2}{4},$$

где D — диаметр КА, м.

4.8 В связи с тем, что трансверсальная составляющая скорости КО в среднем на порядок больше радиальной (за исключением высокоэллиптических орбит), т. е. вектор относительной скорости $V_{отн}$, км/с, отклоняется от горизонтальной скорости незначительно, направление относительной скорости столкновений характеризуется только ее отклонением A, град, от трансверсальной составляющей скорости КА V_τ, км/с, за исключением высокоэллиптических орбит. В общем случае в процессе математи-

ческого моделирования относительную скорость вычисляют как векторную разность скоростей соответственно произвольного и заданного объектов. Для приближенных вычислений относительной скорости при значениях угла A в пределах от минус 90° до плюс 90° применяют формулу

$$V_{отн}(A) = 2V_{\tau}\cos(A). \quad (3)$$

Погрешность вычислений по формуле (3) в большинстве случаев не превышает 0,5 км/с.

4.9 Статистическую плотность распределения направления трансверсальной составляющей относительной скорости $pV_{отн}(A)$ вычисляют в процессе математического моделирования усреднением соответствующих мгновенных значений в различных точках траектории с учетом концентрации техногенного вещества и возможных направлений относительной скорости КО в этих точках согласно [2], [3].

Статистическую плотность распределения направления трансверсальной составляющей скорости возможных столкновений $pV_{стл}(A)$ в процессе математического моделирования по [1] вычисляют по формуле

$$pV_{стл}(A) = \frac{V_{отн}(A)\,pV_{отн}(A)}{\int\limits_{A} V_{отн}(A)\,pV_{отн}(A)\,dA}. \quad (4)$$

Применение формулы (4) учитывает влияние различного вклада КО с различными относительными скоростями в суммарную оценку плотности потока, при этом реализуется переход к усреднению по множеству возможных столкновений.

Среднюю скорость возможных столкновений КА с КО $V_{стл}$, км/с, в процессе математического моделирования по [1] вычисляют по формуле

$$\overline{V}_{стл} = \int\limits_{A} V_{отн}(A)\,pV_{стл}(A)\,dA. \quad (5)$$

4.10 Среднее число столкновений КА сферической формы с техногенным веществом j-го диапазона размеров $N(n)_j$ за период n лет определяют по формуле

$$N(n)_j = \sum_{k=1}^{n} N_j(t_{k+1}, t_k), \quad (6)$$

где $N_j(t_{k+1}, t_k) = P_j\left(F(t_{k+1}) - F(t_k)\right)$ — поток техногенного вещества для j-го диапазона в n-м году, $м^{-2} \cdot год^{-1}$;

$F(t_k)$ — значение функции для момента времени t_k.

Среднее число столкновений КА сферической формы с техногенным веществом j-го диапазона размеров $N(t_1, t_2)$ в интервале времени (t_1, t_2) меньше года в k-м году определяют по формуле

$$N(t_1, t_2)_j = P_j\left(F(t_{k+1}) - F(t_k)\right)\frac{t_2 - t_1}{365}. \quad (7)$$

Вероятность столкновения КА с техногенным веществом j-го диапазона размеров за период n лет определяют по формуле

$$P\left(N_{(t_k, t_{k+n})}\right) = 1 - \exp\left(-N_j(t_{k+n}, t_k)\right). \quad (8)$$

5 Определение плотности потока техногенного вещества относительно инерциальной системы координат

5.1 При оценке текущей плотности потока КО $Q(h, \varphi)_j$ относительно ИСК высоту h и широту точки φ задают дискретно с вариативным шагом по высоте и 5° по широте.

5.2 Средние значения трансверсальной составляющей скорости КО $\overline{V}_{\tau}(h)_j$, которые при вычислениях по формуле (1) использовались для определения плотности потока $Q(h, \varphi)_j$, приведены в таблице 5.1. Эти значения получены усреднением скоростей всех КО заданного диапазона размеров, орбиты которых отличаются высотами, эксцентриситетами и наклонениями.

Таблица 5.1 — Средние значения трансверсальной составляющей скорости по высоте

Высота, км	Средняя скорость, км/с, для j-го диапазона размеров										
	1	2	3	4	5	6	7	8	9	10	11
200	7,8248	7,8215	7,8190	7,8203	7,8191	7,8181	7,8186	7,8148	7,8130	7,8149	7,8112
300	7,7835	7,7807	7,7727	7,7714	7,7621	7,7640	7,7574	7,7478	7,7508	7,7517	7,7513
400	7,7191	7,7099	7,7007	7,6950	7,6957	7,6983	7,6895	7,6899	7,6934	7,6973	7,6950
500	7,6669	7,6686	7,6620	7,6580	7,6620	7,6568	7,6574	7,6475	7,6376	7,6325	7,6396
600	7,6133	7,6059	7,5999	7,5899	7,5813	7,5741	7,5670	7,5709	7,5740	7,5780	7,5856
700	7,5608	7,5520	7,5467	7,5411	7,5383	7,5369	7,5305	7,5354	7,5290	7,5258	7,5325
800	7,4794	7,4749	7,4722	7,4740	7,4731	7,4777	7,4818	7,4823	7,4851	7,4841	7,4801
900	7,4490	7,4503	7,4471	7,4451	7,4435	7,4345	7,4291	7,4224	7,4221	7,4210	7,4240
1000	7,3860	7,3894	7,3809	7,3783	7,3727	7,3737	7,3639	7,3687	7,3676	7,3668	7,3756
1100	7,3353	7,3403	7,3369	7,3325	7,3345	7,3278	7,3319	7,3342	7,3380	7,3311	7,3263
1200	7,3193	7,3107	7,3052	7,3012	7,2998	7,2920	7,2925	7,2898	7,2868	7,2820	7,2831
1300	7,2673	7,2589	7,2520	7,2477	7,2419	7,2379	7,2387	7,2405	7,2443	7,2407	7,2352
1400	7,2037	7,2003	7,2018	7,1958	7,1907	7,1916	7,1955	7,1961	7,1884	7,1849	7,1867
1500	7,1566	7,1598	7,1607	7,1590	7,1511	7,1422	7,1337	7,1357	7,1372	7,1356	7,1381
1600	7,1558	7,1516	7,1532	7,1528	7,1429	7,1372	7,1276	7,1206	7,1201	7,1167	7,1076
1700	7,1007	7,1051	7,0952	7,0987	7,0897	7,0896	7,0936	7,0896	7,0796	7,0735	7,0823
1800	7,0499	7,0536	7,0500	7,0533	7,0512	7,0504	7,0462	7,0473	7,0487	7,0411	7,0490
1900	7,0605	7,0534	7,0502	7,0530	7,0449	7,0403	7,0428	7,0330	7,0254	7,0286	7,0226
2000	6,6477	6,6434	6,6344	6,6291	6,6296	6,6228	6,6196	6,6228	6,6266	6,6217	6,6281
4000	5,8740	5,8755	5,8700	5,8746	5,8688	5,8660	5,8640	5,8669	5,8681	5,8667	5,8745
9000	4,0709	4,0721	4,0621	4,0613	4,0540	4,0568	4,0605	4,0600	4,0541	4,0454	4,0494
18 000	3,3840	3,3801	3,3801	3,3810	3,3844	3,3866	3,3823	3,3777	3,3784	3,3770	3,3827
19 000	3,8311	3,8323	3,8315	3,8320	3,8307	3,8282	3,8267	3,8201	3,8198	3,8154	3,8141
19 100	3,8570	3,8570	3,8517	3,8441	3,8346	3,8298	3,8331	3,8307	3,8323	3,8223	3,8152
19 200	3,6800	3,6846	3,6812	3,6789	3,6746	3,6721	3,6752	3,6729	3,6748	3,6715	3,6712
19 300	3,5122	3,5163	3,5168	3,5147	3,5135	3,5099	3,5119	3,5148	3,5058	3,5000	3,5020
19 400	3,4002	3,4034	3,3964	3,3917	3,3961	3,3974	3,3961	3,3945	3,3931	3,3892	3,3882
19 600	3,3394	3,3414	3,3362	3,3305	3,3255	3,3286	3,3288	3,3273	3,3260	3,3174	3,3225
19 800	3,3861	3,3887	3,3930	3,3924	3,3972	3,3949	3,3870	3,3887	3,3903	3,3925	3,3916
20 000	3,3978	3,3887	3,3894	3,3811	3,3766	3,3688	3,3700	3,3743	3,3689	3,3645	3,3690
20 100	3,3796	3,3705	3,3661	3,3641	3,3577	3,3603	3,3600	3,3556	3,3475	3,3417	3,3440
20 200	3,2972	3,3003	3,2913	3,2815	3,2772	3,2793	3,2818	3,2765	3,2676	3,2599	3,2512
20 300	3,2338	3,2341	3,2304	3,2273	3,2233	3,2249	3,2295	3,2305	3,2230	3,2239	3,2139
20 400	3,2996	3,2969	3,2936	3,2962	3,3008	3,3058	3,2992	3,2956	3,2964	3,3008	3,3050
20 600	3,2187	3,2139	3,2092	3,2087	3,2021	3,2013	3,1971	3,2002	3,1991	3,1949	3,1881
20 800	3,1750	3,1685	3,1735	3,1673	3,1634	3,1588	3,1549	3,1579	3,1617	3,1620	3,1575
21 000	3,2229	3,1613	3,2069	3,2031	3,1943	3,1986	3,1899	3,1817	3,1738	3,1687	3,1654
21 100	3,2164	3,2167	3,2096	3,2090	3,2076	3,1980	3,1981	3,1901	3,1867	3,1830	3,1883
21 200	3,2226	3,2147	3,2136	3,2092	3,2134	3,2152	3,2156	3,2062	3,2056	3,2051	3,2091
21 300	3,2243	3,2235	3,2239	3,2283	3,2301	3,2222	3,2227	3,2233	3,2205	3,2147	3,2087
21 400	3,3149	3,3163	3,3077	3,2978	3,2954	3,2978	3,2945	3,2942	3,2969	3,3004	3,3036

Продолжение таблицы 5.1

Высота, км	Средняя скорость, км/с, для *j*-го диапазона размеров										
	1	2	3	4	5	6	7	8	9	10	11
21 600	3,1491	3,1469	3,1471	3,1387	3,1381	3,1398	3,1343	3,1350	3,1390	3,1378	3,1420
21 800	3,1265	3,1226	3,1207	3,1121	3,1043	3,0947	3,0982	3,1015	3,0968	3,0980	3,0911
22 000	3,1340	3,1269	3,1229	3,1210	3,1224	3,1205	3,1185	3,1168	3,1146	3,1183	3,1200
22 200	3,0529	3,0442	3,0480	3,0485	3,0454	3,0375	3,0304	3,0305	3,0298	3,0334	3,0372
22 400	3,0006	2,9972	3,0022	3,0070	3,0097	3,0114	3,0080	3,0129	3,0100	3,0082	3,0027
22 600	2,9697	2,9642	2,9677	2,9686	2,9684	2,9712	2,9696	2,9625	2,9659	2,9602	2,9642
22 800	2,9891	2,9796	2,9762	2,9769	2,9691	2,9643	2,9565	2,9504	2,9417	2,9378	2,9414
23 000	2,9517	2,9554	2,9571	2,9610	2,9635	2,9592	2,9555	2,9573	2,9567	2,9576	2,9506
23 200	3,1605	3,1552	3,1546	3,1543	3,1565	3,1544	3,1448	3,1459	3,1382	3,1295	3,1315
23 400	3,0591	3,0509	3,0484	3,0462	3,0460	3,0363	3,0388	3,0320	3,0294	3,0207	3,0238
23 500	3,0397	3,0318	3,0283	3,0307	3,0255	3,0299	3,0285	3,0196	3,0194	3,0165	3,0129
23 600	3,0120	3,0052	3,0046	2,9989	2,9899	2,9903	2,9818	2,9740	2,9691	2,9718	2,9666
23 700	2,9932	2,9877	2,9816	2,9822	2,9760	2,9692	2,9622	2,9537	2,9584	2,9602	2,9570
23 800	2,9748	2,9694	2,9605	2,9619	2,9526	2,9516	2,9537	2,9438	2,9386	2,9403	2,9430
24 000	2,8668	2,8590	2,8490	2,8400	2,8430	2,8413	2,8343	2,8384	2,8417	2,8351	2,8301
30 000	2,7656	2,7621	2,7587	2,7552	2,7459	2,7410	2,7317	2,7237	2,7161	2,7117	2,7160
31 000	2,7718	2,7717	2,7752	2,7715	2,7638	2,7654	2,7623	2,7565	2,7609	2,7591	2,7554
32 000	2,7597	2,7598	2,7536	2,7519	2,7454	2,7378	2,7427	2,7426	2,7389	2,7332	2,7359
33 000	2,8578	2,8544	2,8453	2,8363	2,8341	2,8251	2,8194	2,8191	2,8093	2,8014	2,8055
34 000	2,8658	2,8683	2,8628	2,8556	2,8511	2,8436	2,8477	2,8474	2,8451	2,8433	2,8357
35 000	2,8939	2,8987	2,8914	2,8886	2,8884	2,8910	2,8855	2,8869	2,8801	2,8807	2,8904
35 500	2,9482	2,9460	2,9504	2,9528	2,9540	2,9532	2,9451	2,9402	2,9417	2,9427	2,9358
35 600	2,9911	2,9849	2,9816	2,9797	2,9779	2,9779	2,9746	2,9724	2,9709	2,9684	2,9777
35 700	3,0104	3,0099	3,0121	3,0052	3,0056	3,0095	3,0035	3,0022	3,0071	2,9990	2,9956
35 710	3,0351	3,0258	3,0275	3,0208	3,0224	3,0219	3,0150	3,0167	3,0157	3,0104	3,0098
35 720	3,0376	3,0358	3,0341	3,0379	3,0350	3,0294	3,0272	3,0310	3,0258	3,0213	3,0189
35 730	3,0515	3,0529	3,0531	3,0549	3,0529	3,0450	3,0361	3,0314	3,0331	3,0375	3,0281
35 740	3,1052	3,0975	3,0901	3,0853	3,0754	3,0655	3,0612	3,0587	3,0487	3,0401	3,0487
35 750	3,0929	3,0945	3,0986	3,0891	3,0842	3,0820	3,0832	3,0792	3,0770	3,0705	3,0608
35 760	3,0994	3,0920	3,0872	3,0862	3,0879	3,0918	3,0961	3,0939	3,0926	3,0865	3,0807
35 770	3,1181	3,1110	3,1111	3,1031	3,0931	3,0981	3,0922	3,0967	3,0881	3,0917	3,0934
35 780	3,1038	3,0964	3,0983	3,1017	3,0992	3,0993	3,1012	3,0932	3,0845	3,0839	3,0934
35 790	3,1225	3,1162	3,1157	3,1171	3,1221	3,1190	3,1117	3,1046	3,0978	3,0941	3,0893
35 800	3,0981	3,0899	3,0822	3,0863	3,0819	3,0790	3,0795	3,0831	3,0836	3,0782	3,0827
35 810	3,0963	3,0920	3,0843	3,0766	3,0753	3,0698	3,0703	3,0680	3,0691	3,0711	3,0776
35 820	3,1037	3,1037	3,1043	3,0994	3,1017	3,0959	3,0940	3,0878	3,0860	3,0760	3,0718
35 830	3,0702	3,0724	3,0704	3,0618	3,0588	3,0600	3,0636	3,0686	3,0703	3,0625	3,0651
35 840	3,0861	3,0766	3,0722	3,0682	3,0727	3,0695	3,0627	3,0672	3,0718	3,0692	3,0620
35 850	3,0896	3,0803	3,0826	3,0875	3,0846	3,0787	3,0708	3,0635	3,0573	3,0575	3,0603
35 860	3,0990	3,0913	3,0834	3,0778	3,0799	3,0833	3,0767	3,0675	3,0664	3,0632	3,0614
35 870	3,0769	3,0774	3,0729	3,0773	3,0719	3,0708	3,0700	3,0640	3,0579	3,0591	3,0548

Окончание таблицы 5.1

Высота, км	Средняя скорость, км/с, для *j*-го диапазона размеров										
	1	2	3	4	5	6	7	8	9	10	11
35 880	3,0690	3,0626	3,0562	3,0504	3,0498	3,0467	3,0515	3,0496	3,0509	3,0552	3,0540
35 890	3,0932	3,0967	3,0890	3,0832	3,0738	3,0680	3,0678	3,0625	3,0622	3,0600	3,0534
36 000	3,0903	3,0836	3,0758	3,0686	3,0649	3,0609	3,0547	3,0568	3,0519	3,0470	3,0379
36 100	3,0700	3,0680	3,0612	3,0587	3,0509	3,0515	3,0430	3,0422	3,0467	3,0367	3,0362
36 200	3,0125	3,0102	3,0123	3,0160	3,0110	3,0026	3,0064	3,0099	3,0088	3,0111	3,0084
36 300	3,0096	3,0100	3,0055	2,9958	3,0001	3,0050	2,9977	2,9881	2,9820	2,9864	2,9885
36 400	2,9694	2,9604	2,9653	2,9690	2,9734	2,9703	2,9611	2,9655	2,9574	2,9493	2,9555
36 500	2,9012	2,8974	2,8887	2,8872	2,8914	2,8962	2,8894	2,8859	2,8842	2,8847	2,8782
37 000	2,7768	2,7727	2,7738	2,7778	2,7814	2,7714	2,7715	2,7674	2,7666	2,7702	2,7674
38 000	2,6656	2,6576	2,6476	2,6443	2,6343	2,6329	2,6283	2,6333	2,6382	2,6410	2,6406
39 000	2,6249	2,6218	2,6248	2,6175	2,6104	2,6052	2,5966	2,6001	2,5904	2,5853	2,5813

5.3 Плотность потока $Q(h, \varphi)_j$ для объектов различных диапазонов размеров определяют в соответствии с таблицами 5.2—5.12.

Таблица 5.2 — Плотность потока КО размером от 0,01 до 0,10 мм относительно ИСК

Высота, км	Плотность потока, $м^{-2} \cdot год^{-1}$																	
	2,5°	7,5°	12,5°	17,5°	22,5°	27,5°	32,5°	37,5°	42,5°	47,5°	52,5°	57,5°	62,5°	67,5°	72,5°	77,5°	82,5°	87,5°
200	7,92 E+03	7,92 E+03	8,32 E+03	8,32 E+03	8,66 E+03	8,43 E+03	8,11 E+03	8,30 E+03	9,20 E+03	1,05 E+04	1,18 E+04	1,07 E+04	1,33 E+04	1,41 E+04	1,93 E+04	2,15 E+04	3,18 E+04	8,12 E+03
300	1,65 E+04	1,65 E+04	1,73 E+04	1,73 E+04	1,80 E+04	1,75 E+04	1,69 E+04	1,72 E+04	1,91 E+04	2,17 E+04	2,45 E+04	2,23 E+04	2,76 E+04	2,93 E+04	4,02 E+04	4,48 E+04	6,61 E+04	1,69 E+04
400	3,33 E+04	3,33 E+04	3,50 E+04	3,50 E+04	3,64 E+04	3,54 E+04	3,41 E+04	3,49 E+04	3,87 E+04	4,40 E+04	4,95 E+04	4,51 E+04	5,58 E+04	5,92 E+04	8,13 E+04	9,05 E+04	1,34 E+05	3,41 E+04
500	4,81 E+04	4,81 E+04	5,06 E+04	5,06 E+04	5,27 E+04	5,12 E+04	4,93 E+04	5,04 E+04	5,59 E+04	6,36 E+04	7,16 E+04	6,53 E+04	8,07 E+04	8,57 E+04	1,18 E+05	1,31 E+05	1,93 E+05	4,94 E+04
600	5,50 E+04	5,50 E+04	5,78 E+04	5,78 E+04	6,02 E+04	5,86 E+04	5,63 E+04	5,76 E+04	6,39 E+04	7,27 E+04	8,18 E+04	7,46 E+04	9,22 E+04	9,79 E+04	1,34 E+05	1,50 E+05	2,21 E+05	5,64 E+04
700	6,96 E+04	6,96 E+04	7,32 E+04	7,32 E+04	7,62 E+04	7,41 E+04	7,13 E+04	7,30 E+04	8,09 E+04	9,20 E+04	1,04 E+05	9,44 E+04	1,17 E+05	1,24 E+05	1,70 E+05	1,89 E+05	2,80 E+05	7,14 E+04
800	6,38 E+04	6,38 E+04	6,59 E+04	6,59 E+04	6,85 E+04	6,82 E+04	6,74 E+04	7,03 E+04	7,73 E+04	8,64 E+04	9,60 E+04	1,02 E+05	1,28 E+05	1,35 E+05	1,73 E+05	2,28 E+05	3,11 E+05	7,67 E+04
900	4,34 E+04	4,34 E+04	4,46 E+04	4,46 E+04	4,63 E+04	4,66 E+04	4,64 E+04	4,88 E+04	5,35 E+04	5,94 E+04	6,57 E+04	7,35 E+04	9,28 E+04	9,70 E+04	1,22 E+05	1,70 E+05	2,26 E+05	5,52 E+04
1000	2,45 E+04	2,45 E+04	2,52 E+04	2,52 E+04	2,62 E+04	2,63 E+04	2,63 E+04	2,76 E+04	3,03 E+04	3,36 E+04	3,72 E+04	4,17 E+04	5,26 E+04	5,50 E+04	6,91 E+04	9,64 E+04	1,28 E+05	3,13 E+04
1100	1,43 E+04	1,43 E+04	1,47 E+04	1,47 E+04	1,53 E+04	1,54 E+04	1,53 E+04	1,61 E+04	1,76 E+04	1,96 E+04	2,17 E+04	2,41 E+04	3,05 E+04	3,19 E+04	4,01 E+04	5,56 E+04	7,41 E+04	1,81 E+04
1200	1,07 E+04	1,07 E+04	1,10 E+04	1,10 E+04	1,14 E+04	1,15 E+04	1,14 E+04	1,20 E+04	1,32 E+04	1,46 E+04	1,62 E+04	1,81 E+04	2,29 E+04	2,40 E+04	3,01 E+04	4,19 E+04	5,57 E+04	1,36 E+04
1300	1,08 E+04	1,08 E+04	1,11 E+04	1,11 E+04	1,14 E+04	1,13 E+04	1,15 E+04	1,22 E+04	1,34 E+04	1,51 E+04	1,69 E+04	1,82 E+04	2,26 E+04	2,45 E+04	3,41 E+04	3,56 E+04	3,74 E+04	7,79 E+03
1400	1,75 E+04	1,75 E+04	1,79 E+04	1,79 E+04	1,82 E+04	1,79 E+04	1,85 E+04	1,97 E+04	2,18 E+04	2,48 E+04	2,79 E+04	2,93 E+04	3,60 E+04	4,00 E+04	5,99 E+04	4,95 E+04	3,75 E+04	5,31 E+03
1500	9,62 E+03	9,62 E+03	9,88 E+03	9,88 E+03	1,01 E+04	9,87 E+03	1,02 E+04	1,08 E+04	1,20 E+04	1,36 E+04	1,53 E+04	1,61 E+04	1,97 E+04	2,19 E+04	3,27 E+04	2,72 E+04	2,11 E+04	3,09 E+03
1600	4,32 E+03	4,32 E+03	4,45 E+03	4,45 E+03	4,54 E+03	4,46 E+03	4,57 E+03	4,85 E+03	5,35 E+03	6,09 E+03	6,84 E+03	7,15 E+03	8,79 E+03	9,70 E+03	1,43 E+04	1,26 E+04	1,09 E+04	1,87 E+03
1700	2,55 E+03	2,55 E+03	2,62 E+03	2,62 E+03	2,68 E+03	2,64 E+03	2,69 E+03	2,85 E+03	3,15 E+03	3,57 E+03	4,01 E+03	4,18 E+03	5,15 E+03	5,66 E+03	8,24 E+03	7,52 E+03	6,99 E+03	1,30 E+03
1800	2,01 E+03	2,01 E+03	2,07 E+03	2,07 E+03	2,11 E+03	2,08 E+03	2,12 E+03	2,24 E+03	2,48 E+03	2,82 E+03	3,16 E+03	3,29 E+03	4,05 E+03	4,46 E+03	6,51 E+03	5,88 E+03	5,40 E+03	9,87 E+02

Продолжение таблицы 5.2

Высота, км	Плотность потока, $м^{-2} \cdot год^{-1}$																	
	2,5°	7,5°	12,5°	17,5°	22,5°	27,5°	32,5°	37,5°	42,5°	47,5°	52,5°	57,5°	62,5°	67,5°	72,5°	77,5°	82,5°	87,5°
1900	1,50 E+03	1,50 E+03	1,55 E+03	1,55 E+03	1,58 E+03	1,56 E+03	1,59 E+03	1,68 E+03	1,85 E+03	2,11 E+03	2,36 E+03	2,46 E+03	3,03 E+03	3,33 E+03	4,86 E+03	4,39 E+03	4,05 E+03	7,43 E+02
2000	2,58 E+02	2,35 E+02	2,58 E+02	2,35 E+02	2,51 E+02	2,17 E+02	2,13 E+02	2,22 E+02	2,45 E+02	2,77 E+02	3,11 E+02	3,07 E+02	3,80 E+02	4,07 E+02	5,62 E+02	5,98 E+02	7,56 E+02	1,84 E+02
4000	1,35 E+02	1,31 E+02	1,24 E+02	6,97 E+01	8,75 E+01	3,35 E+01	3,21 E+01	3,28 E+01	3,60 E+01	4,05 E+01	4,58 E+01	4,46 E+01	5,61 E+01	5,79 E+01	7,26 E+01	7,95 E+01	1,12 E+02	3,84 E+01
9000	4,52 E+01	4,24 E+01	3,90 E+01	2,11 E+01	2,60 E+01	1,02 E+01	9,68 E+00	9,80 E+00	1,07 E+01	1,20 E+01	1,36 E+01	1,31 E+01	1,65 E+01	1,69 E+01	2,13 E+01	2,35 E+01	3,35 E+01	1,14 E+01
18 000	4,04 E+01	3,62 E+01	3,26 E+01	1,87 E+01	2,20 E+01	1,03 E+01	9,94 E+00	1,03 E+01	1,11 E+01	1,27 E+01	1,50 E+01	1,59 E+01	2,28 E+01	1,15 E+01	1,33 E+01	1,45 E+01	2,07 E+01	7,38 E+00
19 000	1,67 E+02	1,19 E+02	9,78 E+01	7,92 E+01	7,80 E+01	6,47 E+01	6,51 E+01	7,00 E+01	7,53 E+01	8,73 E+01	1,08 E+02	1,27 E+02	2,02 E+02	2,37 E+01	1,42 E+01	1,54 E+01	2,19 E+01	7,95 E+00
19 100	1,87 E+02	1,32 E+02	1,07 E+02	8,85 E+01	8,65 E+01	7,34 E+01	7,38 E+01	7,95 E+01	8,54 E+01	9,91 E+01	1,23 E+02	1,45 E+02	2,31 E+02	2,53 E+01	1,39 E+01	1,51 E+01	2,15 E+01	7,81 E+00
19 200	1,06 E+02	7,91 E+01	6,63 E+01	5,00 E+01	5,10 E+01	3,84 E+01	3,85 E+01	4,12 E+01	4,43 E+01	5,13 E+01	6,33 E+01	7,35 E+01	1,16 E+02	1,75 E+01	1,33 E+01	1,44 E+01	2,05 E+01	7,47 E+00
19 300	6,23 E+01	5,06 E+01	4,39 E+01	2,93 E+01	3,18 E+01	1,97 E+01	1,95 E+01	2,07 E+01	2,23 E+01	2,57 E+01	3,13 E+01	3,55 E+01	5,46 E+01	1,32 E+01	1,27 E+01	1,38 E+01	1,97 E+01	7,18 E+00
19 400	4,39 E+01	3,80 E+01	3,38 E+01	2,05 E+01	2,34 E+01	1,21 E+01	1,18 E+01	1,24 E+01	1,34 E+01	1,53 E+01	1,84 E+01	2,03 E+01	3,01 E+01	1,09 E+01	1,18 E+01	1,29 E+01	1,82 E+01	6,68 E+00
19 600	3,99 E+01	3,54 E+01	3,18 E+01	1,86 E+01	2,17 E+01	1,04 E+01	1,01 E+01	1,06 E+01	1,14 E+01	1,31 E+01	1,55 E+01	1,69 E+01	2,47 E+01	1,03 E+01	1,15 E+01	1,25 E+01	1,77 E+01	6,54 E+00
19 800	4,64 E+01	3,96 E+01	3,51 E+01	2,17 E+01	2,45 E+01	1,31 E+01	1,29 E+01	1,36 E+01	1,46 E+01	1,68 E+01	2,02 E+01	2,25 E+01	3,38 E+01	1,09 E+01	1,15 E+01	1,24 E+01	1,76 E+01	6,53 E+00
20 000	5,25 E+01	4,19 E+01	3,67 E+01	2,20 E+01	2,46 E+01	1,27 E+01	1,23 E+01	1,27 E+01	1,41 E+01	1,67 E+01	2,21 E+01	1,72 E+01	2,17 E+01	9,87 E+00	1,11 E+01	1,21 E+01	1,71 E+01	6,38 E+00
20 100	5,05 E+01	4,01 E+01	3,53 E+01	2,05 E+01	2,32 E+01	1,12 E+01	1,07 E+01	1,10 E+01	1,23 E+01	1,47 E+01	2,01 E+01	1,31 E+01	1,43 E+01	9,24 E+00	1,09 E+01	1,18 E+01	1,67 E+01	6,28 E+00
20 300	3,58 E+01	3,14 E+01	2,84 E+01	1,54 E+01	1,84 E+01	7,49 E+00	7,14 E+00	7,26 E+00	8,02 E+00	9,34 E+00	1,19 E+01	9,23 E+00	1,09 E+01	8,55 E+00	1,03 E+01	1,11 E+01	1,57 E+01	5,91 E+00
20 400	4,71 E+01	3,77 E+01	3,33 E+01	1,89 E+01	2,16 E+01	9,95 E+00	9,50 E+00	9,64 E+00	1,08 E+01	1,30 E+01	1,80 E+01	1,09 E+01	1,09 E+01	8,60 E+00	1,03 E+01	1,12 E+01	1,58 E+01	5,98 E+00
20 600	3,64 E+01	3,14 E+01	2,83 E+01	1,53 E+01	1,82 E+01	7,38 E+00	7,02 E+00	7,11 E+00	7,90 E+00	9,29 E+00	1,22 E+01	8,54 E+00	9,40 E+00	8,05 E+00	9,70 E+00	1,05 E+01	1,48 E+01	5,64 E+00

Продолжение таблицы 5.2

Высота, км	Плотность потока, $м^{-2} \cdot год^{-1}$																	
	2,5°	7,5°	12,5°	17,5°	22,5°	27,5°	32,5°	37,5°	42,5°	47,5°	52,5°	57,5°	62,5°	67,5°	72,5°	77,5°	82,5°	87,5°
20 800	3,43 E+01	3,01 E+01	2,73 E+01	1,46 E+01	1,75 E+01	6,81 E+00	6,46 E+00	6,54 E+00	7,26 E+00	8,49 E+00	1,10 E+01	7,95 E+00	8,86 E+00	7,81 E+00	9,40 E+00	1,02 E+01	1,43 E+01	5,51 E+00
21 000	3,60 E+01	3,10 E+01	2,79 E+01	1,51 E+01	1,79 E+01	7,14 E+00	6,78 E+00	6,86 E+00	7,64 E+00	9,00 E+00	1,19 E+01	8,10 E+00	8,70 E+00	7,66 E+00	9,20 E+00	9,94 E+00	1,40 E+01	5,42 E+00
21 100	3,89 E+01	3,25 E+01	2,92 E+01	1,59 E+01	1,87 E+01	7,78 E+00	7,39 E+00	7,48 E+00	8,38 E+00	9,95 E+00	1,35 E+01	8,55 E+00	8,75 E+00	7,66 E+00	9,21 E+00	9,96 E+00	1,40 E+01	5,43 E+00
21 200	4,17 E+01	3,39 E+01	3,02 E+01	1,67 E+01	1,93 E+01	8,41 E+00	8,00 E+00	8,10 E+00	9,11 E+00	1,09 E+01	1,51 E+01	8,97 E+00	8,74 E+00	7,59 E+00	9,12 E+00	9,86 E+00	1,38 E+01	5,37 E+00
21 300	4,30 E+01	3,48 E+01	3,09 E+01	1,72 E+01	1,98 E+01	8,65 E+00	8,24 E+00	8,34 E+00	9,39 E+00	1,13 E+01	1,57 E+01	9,14 E+00	8,75 E+00	7,59 E+00	9,11 E+00	9,84 E+00	1,38 E+01	5,40 E+00
21 400	5,64 E+01	4,20 E+01	3,65 E+01	2,12 E+01	2,34 E+01	1,17 E+01	1,12 E+01	1,13 E+01	1,29 E+01	1,58 E+01	2,31 E+01	1,14 E+01	9,27 E+00	7,59 E+00	9,11 E+00	9,85 E+00	1,38 E+01	5,39 E+00
21 600	3,86 E+01	3,19 E+01	2,86 E+01	1,56 E+01	1,82 E+01	7,55 E+00	7,18 E+00	7,26 E+00	8,15 E+00	9,72 E+00	1,34 E+01	8,13 E+00	8,04 E+00	7,09 E+00	8,47 E+00	9,14 E+00	1,28 E+01	5,08 E+00
21 800	3,39 E+01	2,92 E+01	2,64 E+01	1,40 E+01	1,67 E+01	6,48 E+00	6,15 E+00	6,22 E+00	6,93 E+00	8,18 E+00	1,09 E+01	7,24 E+00	7,60 E+00	6,85 E+00	8,17 E+00	8,82 E+00	1,23 E+01	4,92 E+00
22 000	3,79 E+01	3,14 E+01	2,81 E+01	1,52 E+01	1,79 E+01	7,33 E+00	6,96 E+00	7,04 E+00	7,90 E+00	9,44 E+00	1,30 E+01	7,84 E+00	7,68 E+00	6,80 E+00	8,09 E+00	8,73 E+00	1,22 E+01	4,90 E+00
22 200	3,16 E+01	2,76 E+01	2,50 E+01	1,32 E+01	1,59 E+01	5,94 E+00	5,63 E+00	5,69 E+00	6,33 E+00	7,45 E+00	9,86 E+00	6,71 E+00	7,16 E+00	6,52 E+00	7,76 E+00	8,39 E+00	1,17 E+01	4,71 E+00
22 400	2,93 E+01	2,61 E+01	2,37 E+01	1,24 E+01	1,50 E+01	5,43 E+00	5,15 E+00	5,20 E+00	5,76 E+00	6,72 E+00	8,73 E+00	6,28 E+00	6,92 E+00	6,38 E+00	7,60 E+00	8,22 E+00	1,15 E+01	4,59 E+00
22 600	2,73 E+01	2,48 E+01	2,27 E+01	1,17 E+01	1,43 E+01	5,00 E+00	4,73 E+00	4,77 E+00	5,27 E+00	6,11 E+00	7,76 E+00	5,91 E+00	6,72 E+00	6,27 E+00	7,48 E+00	8,10 E+00	1,13 E+01	4,51 E+00
22 800	2,64 E+01	2,42 E+01	2,22 E+01	1,14 E+01	1,40 E+01	4,78 E+00	4,52 E+00	4,56 E+00	5,02 E+00	5,81 E+00	7,33 E+00	5,70 E+00	6,54 E+00	6,14 E+00	7,30 E+00	7,90 E+00	1,10 E+01	4,42 E+00
23 000	2,75 E+01	2,48 E+01	2,27 E+01	1,17 E+01	1,43 E+01	5,03 E+00	4,76 E+00	4,80 E+00	5,31 E+00	6,19 E+00	7,96 E+00	5,86 E+00	6,52 E+00	6,09 E+00	7,24 E+00	7,84 E+00	1,09 E+01	4,40 E+00
23 200	4,38 E+01	3,41 E+01	3,00 E+01	1,68 E+01	1,91 E+01	8,70 E+00	8,29 E+00	8,39 E+00	9,52 E+00	1,16 E+01	1,67 E+01	8,66 E+00	7,41 E+00	6,37 E+00	7,57 E+00	8,19 E+00	1,14 E+01	4,60 E+00
23 400	3,58 E+01	2,93 E+01	2,62 E+01	1,43 E+01	1,66 E+01	6,94 E+00	6,60 E+00	6,67 E+00	7,50 E+00	9,00 E+00	1,26 E+01	7,26 E+00	6,86 E+00	6,14 E+00	7,31 E+00	7,92 E+00	1,10 E+01	4,42 E+00
23 500	3,33 E+01	2,77 E+01	2,48 E+01	1,34 E+01	1,57 E+01	6,41 E+00	6,09 E+00	6,15 E+00	6,90 E+00	8,24 E+00	1,14 E+01	6,84 E+00	6,67 E+00	6,05 E+00	7,21 E+00	7,82 E+00	1,09 E+01	4,35 E+00

Продолжение таблицы 5.2

Высота, км	Плотность потока, $м^{-2} \cdot год^{-1}$																	
	2,5°	7,5°	12,5°	17,5°	22,5°	27,5°	32,5°	37,5°	42,5°	47,5°	52,5°	57,5°	62,5°	67,5°	72,5°	77,5°	82,5°	87,5°
23 600	3,04 E+01	2,61 E+01	2,36 E+01	1,25 E+01	1,49 E+01	5,69 E+00	5,40 E+00	5,45 E+00	6,08 E+00	7,20 E+00	9,70 E+00	6,26 E+00	6,42 E+00	5,92 E+00	7,03 E+00	7,61 E+00	1,06 E+01	4,27 E+00
23 700	2,96 E+01	2,56 E+01	2,32 E+01	1,22 E+01	1,46 E+01	5,52 E+00	5,23 E+00	5,28 E+00	5,89 E+00	6,96 E+00	9,33 E+00	6,10 E+00	6,32 E+00	5,84 E+00	6,94 E+00	7,50 E+00	1,04 E+01	4,22 E+00
23 800	2,87 E+01	2,50 E+01	2,26 E+01	1,19 E+01	1,42 E+01	5,32 E+00	5,04 E+00	5,08 E+00	5,66 E+00	6,67 E+00	8,89 E+00	5,93 E+00	6,21 E+00	5,77 E+00	6,86 E+00	7,41 E+00	1,03 E+01	4,16 E+00
24 000	4,58 E+01	2,66 E+01	2,31 E+01	8,46 E+00	9,99 E+00	3,15 E+00	2,92 E+00	2,92 E+00	3,16 E+00	3,56 E+00	4,18 E+00	3,85 E+00	4,75 E+00	4,62 E+00	5,53 E+00	5,92 E+00	8,13 E+00	3,26 E+00
30 000	4,31 E+01	2,31 E+01	1,97 E+01	6,57 E+00	7,54 E+00	2,46 E+00	2,28 E+00	2,26 E+00	2,45 E+00	2,75 E+00	3,20 E+00	3,00 E+00	3,72 E+00	3,62 E+00	4,40 E+00	4,63 E+00	6,18 E+00	2,43 E+00
31 000	4,98 E+01	2,48 E+01	2,09 E+01	6,37 E+00	7,09 E+00	2,37 E+00	2,19 E+00	2,17 E+00	2,35 E+00	2,64 E+00	3,07 E+00	2,86 E+00	3,54 E+00	3,43 E+00	4,19 E+00	4,41 E+00	5,88 E+00	2,28 E+00
32 000	4,87 E+01	2,35 E+01	1,97 E+01	5,82 E+00	6,37 E+00	2,20 E+00	2,03 E+00	2,01 E+00	2,17 E+00	2,44 E+00	2,84 E+00	2,63 E+00	3,26 E+00	3,14 E+00	3,85 E+00	4,07 E+00	5,44 E+00	2,07 E+00
33 000	6,52 E+01	2,87 E+01	2,35 E+01	5,90 E+00	6,06 E+00	2,17 E+00	1,97 E+00	1,94 E+00	2,10 E+00	2,35 E+00	2,74 E+00	2,50 E+00	3,08 E+00	2,97 E+00	3,65 E+00	3,88 E+00	5,20 E+00	1,95 E+00
34 000	7,49 E+01	3,10 E+01	2,51 E+01	5,59 E+00	5,37 E+00	2,07 E+00	1,87 E+00	1,83 E+00	1,98 E+00	2,21 E+00	2,58 E+00	2,32 E+00	2,84 E+00	2,75 E+00	3,41 E+00	3,66 E+00	4,93 E+00	1,77 E+00
35 000	9,68 E+01	3,84 E+01	3,08 E+01	6,02 E+00	5,42 E+00	2,08 E+00	1,84 E+00	1,78 E+00	1,92 E+00	2,13 E+00	2,49 E+00	2,21 E+00	2,69 E+00	2,59 E+00	3,19 E+00	3,44 E+00	4,63 E+00	1,69 E+00
35 500	1,36 E+02	5,14 E+01	4,07 E+01	6,77 E+00	5,41 E+00	2,20 E+00	1,91 E+00	1,81 E+00	1,95 E+00	2,15 E+00	2,51 E+00	2,18 E+00	2,61 E+00	2,51 E+00	3,12 E+00	3,37 E+00	4,55 E+00	1,62 E+00
35 600	1,80 E+02	6,66 E+01	5,24 E+01	7,89 E+00	5,80 E+00	2,40 E+00	2,04 E+00	1,91 E+00	2,05 E+00	2,24 E+00	2,62 E+00	2,23 E+00	2,65 E+00	2,55 E+00	3,15 E+00	3,42 E+00	4,62 E+00	1,65 E+00
35 700	2,32 E+02	8,43 E+01	6,61 E+01	9,15 E+00	6,19 E+00	2,59 E+00	2,16 E+00	1,98 E+00	2,11 E+00	2,29 E+00	2,69 E+00	2,22 E+00	2,61 E+00	2,50 E+00	3,09 E+00	3,35 E+00	4,52 E+00	1,63 E+00
35 710	2,60 E+02	9,39 E+01	7,36 E+01	9,91 E+00	6,51 E+00	2,73 E+00	2,26 E+00	2,06 E+00	2,20 E+00	2,38 E+00	2,79 E+00	2,29 E+00	2,67 E+00	2,57 E+00	3,17 E+00	3,42 E+00	4,59 E+00	1,67 E+00
35 720	2,80 E+02	1,01 E+02	7,86 E+01	1,03 E+01	6,49 E+00	2,79 E+00	2,28 E+00	2,07 E+00	2,20 E+00	2,37 E+00	2,78 E+00	2,25 E+00	2,60 E+00	2,50 E+00	3,09 E+00	3,35 E+00	4,53 E+00	1,63 E+00
35 730	3,17 E+02	1,13 E+02	8,85 E+01	1,12 E+01	6,83 E+00	2,97 E+00	2,40 E+00	2,16 E+00	2,29 E+00	2,45 E+00	2,87 E+00	2,29 E+00	2,64 E+00	2,54 E+00	3,14 E+00	3,40 E+00	4,57 E+00	1,64 E+00
35 740	4,20 E+02	1,48 E+02	1,16 E+02	1,37 E+01	7,54 E+00	3,38 E+00	2,65 E+00	2,32 E+00	2,45 E+00	2,59 E+00	3,04 E+00	2,33 E+00	2,61 E+00	2,51 E+00	3,10 E+00	3,35 E+00	4,51 E+00	1,62 E+00

Продолжение таблицы 5.2

Высота, км	Плотность потока, $м^{-2} \cdot год^{-1}$																	
	2,5°	7,5°	12,5°	17,5°	22,5°	27,5°	32,5°	37,5°	42,5°	47,5°	52,5°	57,5°	62,5°	67,5°	72,5°	77,5°	82,5°	87,5°
35 750	5,53 E+02	1,94 E+02	1,51 E+02	1,71 E+01	8,70 E+00	3,99 E+00	3,06 E+00	2,62 E+00	2,75 E+00	2,87 E+00	3,37 E+00	2,47 E+00	2,70 E+00	2,60 E+00	3,21 E+00	3,48 E+00	4,70 E+00	1,70 E+00
35 760	9,42 E+02	3,27 E+02	2,53 E+02	2,66 E+01	1,15 E+01	5,59 E+00	4,07 E+00	3,31 E+00	3,44 E+00	3,46 E+00	4,08 E+00	2,65 E+00	2,68 E+00	2,57 E+00	3,17 E+00	3,41 E+00	4,59 E+00	1,67 E+00
35 770	1,89 E+03	6,50 E+02	5,02 E+02	4,94 E+01	1,83 E+01	9,52 E+00	6,56 E+00	5,01 E+00	5,13 E+00	4,95 E+00	5,83 E+00	3,12 E+00	2,64 E+00	2,54 E+00	3,15 E+00	3,41 E+00	4,60 E+00	1,64 E+00
35 780	1,97 E+03	6,79 E+02	5,25 E+02	5,16 E+01	1,91 E+01	9,91 E+00	6,82 E+00	5,20 E+00	5,32 E+00	5,12 E+00	6,04 E+00	3,22 E+00	2,70 E+00	2,60 E+00	3,20 E+00	3,47 E+00	4,70 E+00	1,70 E+00
35 790	1,49 E+03	5,13 E+02	3,96 E+02	3,96 E+01	1,53 E+01	7,84 E+00	5,49 E+00	4,27 E+00	4,40 E+00	4,30 E+00	5,07 E+00	2,91 E+00	2,63 E+00	2,53 E+00	3,14 E+00	3,41 E+00	4,59 E+00	1,63 E+00
35 800	1,13 E+03	3,91 E+02	3,03 E+02	3,11 E+01	1,28 E+01	6,37 E+00	4,56 E+00	3,64 E+00	3,77 E+00	3,75 E+00	4,42 E+00	2,74 E+00	2,66 E+00	2,56 E+00	3,16 E+00	3,42 E+00	4,62 E+00	1,67 E+00
35 810	9,58 E+02	3,33 E+02	2,58 E+02	2,70 E+01	1,17 E+01	5,67 E+00	4,13 E+00	3,35 E+00	3,48 E+00	3,51 E+00	4,13 E+00	2,68 E+00	2,70 E+00	2,59 E+00	3,19 E+00	3,46 E+00	4,67 E+00	1,70 E+00
35 820	8,04 E+02	2,80 E+02	2,17 E+02	2,30 E+01	1,03 E+01	4,99 E+00	3,68 E+00	3,03 E+00	3,16 E+00	3,21 E+00	3,78 E+00	2,54 E+00	2,62 E+00	2,51 E+00	3,12 E+00	3,37 E+00	4,53 E+00	1,62 E+00
35 830	6,97 E+02	2,43 E+02	1,89 E+02	2,06 E+01	9,76 E+00	4,56 E+00	3,42 E+00	2,86 E+00	2,99 E+00	3,07 E+00	3,61 E+00	2,52 E+00	2,67 E+00	2,57 E+00	3,16 E+00	3,42 E+00	4,59 E+00	1,68 E+00
35 840	6,17 E+02	2,16 E+02	1,68 E+02	1,86 E+01	9,15 E+00	4,22 E+00	3,19 E+00	2,70 E+00	2,83 E+00	2,92 E+00	3,44 E+00	2,46 E+00	2,65 E+00	2,54 E+00	3,12 E+00	3,38 E+00	4,57 E+00	1,67 E+00
35 850	5,43 E+02	1,90 E+02	1,48 E+02	1,67 E+01	8,45 E+00	3,91 E+00	3,00 E+00	2,57 E+00	2,70 E+00	2,82 E+00	3,31 E+00	2,43 E+00	2,66 E+00	2,55 E+00	3,16 E+00	3,43 E+00	4,64 E+00	1,66 E+00
35 860	4,95 E+02	1,74 E+02	1,35 E+02	1,55 E+01	8,10 E+00	3,70 E+00	2,86 E+00	2,47 E+00	2,60 E+00	2,72 E+00	3,20 E+00	2,38 E+00	2,63 E+00	2,52 E+00	3,12 E+00	3,39 E+00	4,58 E+00	1,64 E+00
35 870	4,47 E+02	1,58 E+02	1,23 E+02	1,46 E+01	8,13 E+00	3,57 E+00	2,80 E+00	2,45 E+00	2,58 E+00	2,72 E+00	3,20 E+00	2,44 E+00	2,75 E+00	2,64 E+00	3,24 E+00	3,50 E+00	4,73 E+00	1,74 E+00
35 880	4,25 E+02	1,50 E+02	1,16 E+02	1,37 E+01	7,44 E+00	3,39 E+00	2,66 E+00	2,33 E+00	2,46 E+00	2,59 E+00	3,05 E+00	2,32 E+00	2,60 E+00	2,50 E+00	3,10 E+00	3,37 E+00	4,55 E+00	1,61 E+00
35 890	4,19 E+02	1,48 E+02	1,15 E+02	1,37 E+01	7,59 E+00	3,35 E+00	2,63 E+00	2,30 E+00	2,43 E+00	2,57 E+00	3,02 E+00	2,30 E+00	2,58 E+00	2,47 E+00	3,05 E+00	3,29 E+00	4,42 E+00	1,62 E+00
35 900	3,36 E+02	1,19 E+02	9,28 E+01	1,14 E+01	6,62 E+00	2,97 E+00	2,38 E+00	2,12 E+00	2,24 E+00	2,39 E+00	2,81 E+00	2,21 E+00	2,52 E+00	2,42 E+00	3,00 E+00	3,26 E+00	4,39 E+00	1,55 E+00
36 000	3,16 E+02	1,12 E+02	8,77 E+01	1,11 E+01	6,70 E+00	2,90 E+00	2,34 E+00	2,10 E+00	2,23 E+00	2,38 E+00	2,80 E+00	2,22 E+00	2,55 E+00	2,45 E+00	3,03 E+00	3,27 E+00	4,41 E+00	1,59 E+00

Окончание таблицы 5.2

Высота, км	Плотность потока, $м^{-2} \cdot год^{-1}$																	
	2,5°	7,5°	12,5°	17,5°	22,5°	27,5°	32,5°	37,5°	42,5°	47,5°	52,5°	57,5°	62,5°	67,5°	72,5°	77,5°	82,5°	87,5°
36 100	2,94 E+02	1,05 E+02	8,15 E+01	1,03 E+01	6,18 E+00	2,75 E+00	2,23 E+00	2,00 E+00	2,13 E+00	2,28 E+00	2,68 E+00	2,13 E+00	2,45 E+00	2,35 E+00	2,92 E+00	3,18 E+00	4,29 E+00	1,51 E+00
36 200	2,17 E+02	7,82 E+01	6,12 E+01	8,42 E+00	5,61 E+00	2,42 E+00	2,01 E+00	1,85 E+00	1,97 E+00	2,14 E+00	2,51 E+00	2,07 E+00	2,42 E+00	2,32 E+00	2,89 E+00	3,14 E+00	4,24 E+00	1,50 E+00
36 300	1,79 E+02	6,51 E+01	5,11 E+01	7,46 E+00	5,29 E+00	2,24 E+00	1,89 E+00	1,76 E+00	1,89 E+00	2,06 E+00	2,42 E+00	2,03 E+00	2,40 E+00	2,30 E+00	2,85 E+00	3,11 E+00	4,21 E+00	1,49 E+00
36 400	1,41 E+02	5,24 E+01	4,14 E+01	6,56 E+00	5,05 E+00	2,06 E+00	1,77 E+00	1,66 E+00	1,78 E+00	1,96 E+00	2,30 E+00	1,97 E+00	2,35 E+00	2,25 E+00	2,77 E+00	3,01 E+00	4,07 E+00	1,46 E+00
36 500	8,07 E+01	3,14 E+01	2,51 E+01	4,83 E+00	4,26 E+00	1,70 E+00	1,51 E+00	1,45 E+00	1,56 E+00	1,74 E+00	2,04 E+00	1,80 E+00	2,17 E+00	2,08 E+00	2,57 E+00	2,80 E+00	3,80 E+00	1,35 E+00
37 000	4,55 E+01	1,89 E+01	1,52 E+01	3,51 E+00	3,39 E+00	1,36 E+00	1,23 E+00	1,20 E+00	1,29 E+00	1,45 E+00	1,71 E+00	1,51 E+00	1,84 E+00	1,75 E+00	2,17 E+00	2,38 E+00	3,25 E+00	1,14 E+00
38 000	2,80 E+01	1,24 E+01	1,01 E+01	2,66 E+00	2,71 E+00	1,08 E+00	9,86 E–01	9,68 E–01	1,05 E+00	1,18 E+00	1,39 E+00	1,23 E+00	1,51 E+00	1,42 E+00	1,75 E+00	1,95 E+00	2,68 E+00	9,41 E–01
39 000	1,86 E+01	8,74 E+00	7,17 E+00	2,08 E+00	2,18 E+00	8,77 E–01	8,03 E–01	7,90 E–01	8,52 E–01	9,62 E–01	1,14 E+00	1,01 E+00	1,23 E+00	1,15 E+00	1,41 E+00	1,58 E+00	2,17 E+00	7,59 E–01

Таблица 5.3 — Плотность потока КО размером от 0,1 до 0,5 мм относительно ИСК

Высота, км	Плотность потока, $м^{-2} \cdot год^{-1}$																	
	2,5°	7,5°	12,5°	17,5°	22,5°	27,5°	32,5°	37,5°	42,5°	47,5°	52,5°	57,5°	62,5°	67,5°	72,5°	77,5°	82,5°	87,5°
200	4,40 E–01	4,40 E–01	4,62 E–01	4,62 E–01	4,81 E–01	4,68 E–01	4,50 E–01	4,61 E–01	5,11 E–01	5,81 E–01	6,54 E–01	5,96 E–01	7,37 E–01	7,83 E–01	1,07 E+00	1,20 E+00	1,77 E+00	4,51 E–01
300	9,14 E–01	9,14 E–01	9,61 E–01	9,61 E–01	1,00 E+00	9,73 E–01	9,36 E–01	9,58 E–01	1,06 E+00	1,21 E+00	1,36 E+00	1,24 E+00	1,53 E+00	1,63 E+00	2,23 E+00	2,49 E+00	3,67 E+00	9,38 E–01
400	1,85 E+00	1,85 E+00	1,94 E+00	1,94 E+00	2,02 E+00	1,97 E+00	1,89 E+00	1,94 E+00	2,15 E+00	2,44 E+00	2,75 E+00	2,51 E+00	3,10 E+00	3,29 E+00	4,52 E+00	5,03 E+00	7,42 E+00	1,90 E+00
500	2,67 E+00	2,67 E+00	2,81 E+00	2,81 E+00	2,93 E+00	2,85 E+00	2,74 E+00	2,80 E+00	3,11 E+00	3,53 E+00	3,98 E+00	3,63 E+00	4,48 E+00	4,76 E+00	6,53 E+00	7,27 E+00	1,07 E+01	2,74 E+00
600	3,06 E+00	3,06 E+00	3,21 E+00	3,21 E+00	3,34 E+00	3,25 E+00	3,13 E+00	3,20 E+00	3,55 E+00	4,04 E+00	4,55 E+00	4,14 E+00	5,12 E+00	5,44 E+00	7,46 E+00	8,31 E+00	1,23 E+01	3,13 E+00
700	3,87 E+00	3,87 E+00	4,07 E+00	4,07 E+00	4,23 E+00	4,12 E+00	3,96 E+00	4,05 E+00	4,49 E+00	5,11 E+00	5,76 E+00	5,25 E+00	6,48 E+00	6,89 E+00	9,45 E+00	1,05 E+01	1,55 E+01	3,97 E+00

Продолжение таблицы 5.3

Высота, км	Плотность потока, $м^{-2} \cdot год^{-1}$																	
	2,5°	7,5°	12,5°	17,5°	22,5°	27,5°	32,5°	37,5°	42,5°	47,5°	52,5°	57,5°	62,5°	67,5°	72,5°	77,5°	82,5°	87,5°
800	3,54 E+00	3,54 E+00	3,66 E+00	3,66 E+00	3,80 E+00	3,79 E+00	3,74 E+00	3,91 E+00	4,30 E+00	4,80 E+00	5,33 E+00	5,67 E+00	7,12 E+00	7,47 E+00	9,59 E+00	1,27 E+01	1,73 E+01	4,26 E+00
900	2,41 E+00	2,41 E+00	2,48 E+00	2,48 E+00	2,57 E+00	2,59 E+00	2,58 E+00	2,71 E+00	2,97 E+00	3,30 E+00	3,65 E+00	4,08 E+00	5,15 E+00	5,39 E+00	6,78 E+00	9,43 E+00	1,25 E+01	3,06 E+00
1000	1,36 E+00	1,36 E+00	1,40 E+00	1,40 E+00	1,45 E+00	1,46 E+00	1,46 E+00	1,53 E+00	1,68 E+00	1,87 E+00	2,06 E+00	2,31 E+00	2,92 E+00	3,06 E+00	3,84 E+00	5,35 E+00	7,11 E+00	1,74 E+00
1100	7,96 E–01	7,96 E–01	8,17 E–01	8,17 E–01	8,49 E–01	8,53 E–01	8,50 E–01	8,93 E–01	9,79 E–01	1,09 E+00	1,20 E+00	1,34 E+00	1,69 E+00	1,77 E+00	2,23 E+00	3,09 E+00	4,11 E+00	1,01 E+00
1200	5,94 E–01	5,94 E–01	6,09 E–01	6,09 E–01	6,33 E–01	6,37 E–01	6,36 E–01	6,68 E–01	7,33 E–01	8,13 E–01	8,99 E–01	1,01 E+00	1,27 E+00	1,33 E+00	1,67 E+00	2,33 E+00	3,09 E+00	7,56 E–01
1300	6,00 E–01	6,00 E–01	6,16 E–01	6,16 E–01	6,32 E–01	6,27 E–01	6,38 E–01	6,76 E–01	7,44 E–01	8,38 E–01	9,36 E–01	1,01 E+00	1,25 E+00	1,36 E+00	1,89 E+00	1,98 E+00	2,08 E+00	4,33 E–01
1400	9,71 E–01	9,71 E–01	9,97 E–01	9,97 E–01	1,01 E+00	9,96 E–01	1,03 E+00	1,10 E+00	1,21 E+00	1,38 E+00	1,55 E+00	1,63 E+00	2,00 E+00	2,22 E+00	3,33 E+00	2,75 E+00	2,08 E+00	2,95 E–01
1500	5,34 E–01	5,34 E–01	5,49 E–01	5,49 E–01	5,58 E–01	5,48 E–01	5,65 E–01	6,02 E–01	6,65 E–01	7,57 E–01	8,51 E–01	8,93 E–01	1,09 E+00	1,22 E+00	1,82 E+00	1,51 E+00	1,17 E+00	1,72 E–01
1600	2,40 E–01	2,40 E–01	2,47 E–01	2,47 E–01	2,52 E–01	2,48 E–01	2,54 E–01	2,69 E–01	2,97 E–01	3,38 E–01	3,80 E–01	3,97 E–01	4,88 E–01	5,39 E–01	7,93 E–01	6,97 E–01	6,06 E–01	1,04 E–01
1700	1,42 E–01	1,42 E–01	1,46 E–01	1,46 E–01	1,49 E–01	1,47 E–01	1,50 E–01	1,58 E–01	1,75 E–01	1,98 E–01	2,23 E–01	2,32 E–01	2,86 E–01	3,14 E–01	4,57 E–01	4,18 E–01	3,88 E–01	7,20 E–02
1800	1,11 E–01	1,11 E–01	1,15 E–01	1,15 E–01	1,17 E–01	1,15 E–01	1,18 E–01	1,25 E–01	1,38 E–01	1,56 E–01	1,76 E–01	1,83 E–01	2,25 E–01	2,48 E–01	3,61 E–01	3,27 E–01	3,00 E–01	5,48 E–02
1900	8,35 E–02	8,35 E–02	8,60 E–02	8,60 E–02	8,79 E–02	8,64 E–02	8,81 E–02	9,33 E–02	1,03 E–01	1,17 E–01	1,31 E–01	1,37 E–01	1,68 E–01	1,85 E–01	2,70 E–01	2,44 E–01	2,25 E–01	4,13 E–02
2000	1,43 E–02	1,30 E–02	1,43 E–02	1,30 E–02	1,40 E–02	1,20 E–02	1,19 E–02	1,23 E–02	1,36 E–02	1,54 E–02	1,73 E–02	1,70 E–02	2,11 E–02	2,26 E–02	3,12 E–02	3,32 E–02	4,20 E–02	1,02 E–02
4000	7,49 E–03	7,25 E–03	6,88 E–03	3,87 E–03	4,86 E–03	1,86 E–03	1,78 E–03	1,82 E–03	2,00 E–03	2,25 E–03	2,54 E–03	2,48 E–03	3,11 E–03	3,22 E–03	4,04 E–03	4,42 E–03	6,23 E–03	2,13 E–03
9000	2,51 E–03	2,35 E–03	2,17 E–03	1,17 E–03	1,44 E–03	5,68 E–04	5,38 E–04	5,44 E–04	5,94 E–04	6,68 E–04	7,55 E–04	7,29 E–04	9,16 E–04	9,41 E–04	1,18 E–03	1,30 E–03	1,86 E–03	6,31 E–04
18 000	2,24 E–03	2,01 E–03	1,81 E–03	1,04 E–03	1,22 E–03	5,70 E–04	5,52 E–04	5,72 E–04	6,19 E–04	7,06 E–04	8,32 E–04	8,85 E–04	1,27 E–03	6,39 E–04	7,39 E–04	8,07 E–04	1,15 E–03	4,10 E–04
19 000	9,28 E–03	6,62 E–03	5,43 E–03	4,40 E–03	4,33 E–03	3,60 E–03	3,61 E–03	3,89 E–03	4,18 E–03	4,85 E–03	6,01 E–03	7,05 E–03	1,12 E–02	1,31 E–03	7,87 E–04	8,57 E–04	1,22 E–03	4,41 E–04

Продолжение таблицы 5.3

Высота, км	Плотность потока, $м^{-2} \cdot год^{-1}$																	
	2,5°	7,5°	12,5°	17,5°	22,5°	27,5°	32,5°	37,5°	42,5°	47,5°	52,5°	57,5°	62,5°	67,5°	72,5°	77,5°	82,5°	87,5°
19 100	1,04 E–02	7,31 E–03	5,97 E–03	4,92 E–03	4,80 E–03	4,07 E–03	4,10 E–03	4,42 E–03	4,75 E–03	5,51 E–03	6,84 E–03	8,04 E–03	1,28 E–02	1,41 E–03	7,72 E–04	8,41 E–04	1,19 E–03	4,34 E–04
19 200	5,88 E–03	4,39 E–03	3,68 E–03	2,78 E–03	2,83 E–03	2,13 E–03	2,14 E–03	2,29 E–03	2,46 E–03	2,85 E–03	3,52 E–03	4,08 E–03	6,44 E–03	9,71 E–04	7,36 E–04	8,01 E–04	1,14 E–03	4,15 E–04
19 300	3,46 E–03	2,81 E–03	2,44 E–03	1,63 E–03	1,77 E–03	1,10 E–03	1,09 E–03	1,15 E–03	1,24 E–03	1,43 E–03	1,74 E–03	1,97 E–03	3,03 E–03	7,31 E–04	7,07 E–04	7,69 E–04	1,09 E–03	3,99 E–04
19 400	2,44 E–03	2,11 E–03	1,88 E–03	1,14 E–03	1,30 E–03	6,72 E–04	6,58 E–04	6,90 E–04	7,44 E–04	8,53 E–04	1,02 E–03	1,12 E–03	1,67 E–03	6,06 E–04	6,56 E–04	7,14 E–04	1,01 E–03	3,71 E–04
19 600	2,22 E–03	1,97 E–03	1,77 E–03	1,03 E–03	1,20 E–03	5,78 E–04	5,63 E–04	5,87 E–04	6,35 E–04	7,25 E–04	8,63 E–04	9,39 E–04	1,37 E–03	5,75 E–04	6,38 E–04	6,93 E–04	9,82 E–04	3,63 E–04
19 800	2,57 E–03	2,20 E–03	1,95 E–03	1,20 E–03	1,36 E–03	7,30 E–04	7,17 E–04	7,54 E–04	8,14 E–04	9,33 E–04	1,12 E–03	1,25 E–03	1,88 E–03	6,06 E–04	6,37 E–04	6,92 E–04	9,79 E–04	3,63 E–04
20 000	2,92 E–03	2,32 E–03	2,04 E–03	1,22 E–03	1,37 E–03	7,07 E–04	6,85 E–04	7,07 E–04	7,83 E–04	9,25 E–04	1,23 E–03	9,55 E–04	1,20 E–03	5,48 E–04	6,19 E–04	6,72 E–04	9,50 E–04	3,54 E–04
20 100	2,80 E–03	2,23 E–03	1,96 E–03	1,14 E–03	1,29 E–03	6,22 E–04	5,97 E–04	6,09 E–04	6,82 E–04	8,14 E–04	1,12 E–03	7,28 E–04	7,95 E–04	5,13 E–04	6,07 E–04	6,58 E–04	9,30 E–04	3,49 E–04
20 200	2,20 E–03	1,87 E–03	1,68 E–03	9,30 E–04	1,09 E–03	4,70 E–04	4,49 E–04	4,57 E–04	5,07 E–04	5,96 E–04	7,80 E–04	5,70 E–04	6,58 E–04	4,86 E–04	5,81 E–04	6,30 E–04	8,89 E–04	3,34 E–04
20 300	1,99 E–03	1,74 E–03	1,58 E–03	8,57 E–04	1,02 E–03	4,16 E–04	3,96 E–04	4,03 E–04	4,45 E–04	5,19 E–04	6,63 E–04	5,13 E–04	6,06 E–04	4,75 E–04	5,70 E–04	6,18 E–04	8,72 E–04	3,28 E–04
20 400	2,62 E–03	2,09 E–03	1,85 E–03	1,05 E–03	1,20 E–03	5,53 E–04	5,27 E–04	5,36 E–04	6,02 E–04	7,21 E–04	9,98 E–04	6,03 E–04	6,05 E–04	4,78 E–04	5,75 E–04	6,23 E–04	8,78 E–04	3,32 E–04
20 600	2,02 E–03	1,74 E–03	1,57 E–03	8,51 E–04	1,01 E–03	4,10 E–04	3,90 E–04	3,95 E–04	4,39 E–04	5,16 E–04	6,78 E–04	4,75 E–04	5,22 E–04	4,47 E–04	5,39 E–04	5,83 E–04	8,21 E–04	3,13 E–04
20 800	1,91 E–03	1,67 E–03	1,51 E–03	8,10 E–04	9,71 E–04	3,78 E–04	3,59 E–04	3,63 E–04	4,03 E–04	4,72 E–04	6,12 E–04	4,41 E–04	4,92 E–04	4,34 E–04	5,22 E–04	5,65 E–04	7,94 E–04	3,06 E–04
21 000	2,00 E–03	1,72 E–03	1,55 E–03	8,36 E–04	9,94 E–04	3,96 E–04	3,77 E–04	3,81 E–04	4,24 E–04	5,00 E–04	6,63 E–04	4,50 E–04	4,83 E–04	4,25 E–04	5,11 E–04	5,52 E–04	7,75 E–04	3,01 E–04
21 100	2,16 E–03	1,81 E–03	1,62 E–03	8,84 E–04	1,04 E–03	4,32 E–04	4,11 E–04	4,16 E–04	4,65 E–04	5,53 E–04	7,49 E–04	4,75 E–04	4,86 E–04	4,26 E–04	5,12 E–04	5,53 E–04	7,77 E–04	3,02 E–04
21 200	2,31 E–03	1,88 E–03	1,68 E–03	9,28 E–04	1,07 E–03	4,67 E–04	4,45 E–04	4,50 E–04	5,06 E–04	6,06 E–04	8,39 E–04	4,98 E–04	4,86 E–04	4,21 E–04	5,07 E–04	5,48 E–04	7,69 E–04	2,99 E–04
21 300	2,39 E–03	1,93 E–03	1,72 E–03	9,53 E–04	1,10 E–03	4,81 E–04	4,58 E–04	4,63 E–04	5,21 E–04	6,25 E–04	8,72 E–04	5,07 E–04	4,86 E–04	4,21 E–04	5,06 E–04	5,46 E–04	7,67 E–04	3,00 E–04

Продолжение таблицы 5.3

Высота, км	Плотность потока, $м^{-2} \cdot год^{-1}$																	
	2,5°	7,5°	12,5°	17,5°	22,5°	27,5°	32,5°	37,5°	42,5°	47,5°	52,5°	57,5°	62,5°	67,5°	72,5°	77,5°	82,5°	87,5°
21 400	3,13 E–03	2,33 E–03	2,03 E–03	1,18 E–03	1,30 E–03	6,51 E–04	6,21 E–04	6,30 E–04	7,17 E–04	8,77 E–04	1,28 E–03	6,33 E–04	5,15 E–04	4,22 E–04	5,06 E–04	5,47 E–04	7,67 E–04	3,00 E–04
21 600	2,14 E–03	1,77 E–03	1,59 E–03	8,65 E–04	1,01 E–03	4,20 E–04	3,99 E–04	4,04 E–04	4,53 E–04	5,40 E–04	7,43 E–04	4,51 E–04	4,47 E–04	3,94 E–04	4,70 E–04	5,08 E–04	7,11 E–04	2,82 E–04
21 800	1,88 E–03	1,62 E–03	1,46 E–03	7,80 E–04	9,30 E–04	3,60 E–04	3,42 E–04	3,45 E–04	3,85 E–04	4,55 E–04	6,08 E–04	4,02 E–04	4,22 E–04	3,80 E–04	4,54 E–04	4,90 E–04	6,85 E–04	2,73 E–04
22 000	2,10 E–03	1,74 E–03	1,56 E–03	8,47 E–04	9,92 E–04	4,07 E–04	3,87 E–04	3,91 E–04	4,39 E–04	5,24 E–04	7,23 E–04	4,35 E–04	4,27 E–04	3,78 E–04	4,50 E–04	4,85 E–04	6,77 E–04	2,72 E–04
22 200	1,76 E–03	1,53 E–03	1,39 E–03	7,33 E–04	8,81 E–04	3,30 E–04	3,13 E–04	3,16 E–04	3,52 E–04	4,14 E–04	5,48 E–04	3,73 E–04	3,98 E–04	3,62 E–04	4,31 E–04	4,66 E–04	6,50 E–04	2,61 E–04
22 400	1,63 E–03	1,45 E–03	1,32 E–03	6,87 E–04	8,33 E–04	3,02 E–04	2,86 E–04	2,89 E–04	3,20 E–04	3,74 E–04	4,85 E–04	3,49 E–04	3,84 E–04	3,54 E–04	4,22 E–04	4,57 E–04	6,36 E–04	2,55 E–04
22 600	1,51 E–03	1,38 E–03	1,26 E–03	6,49 E–04	7,94 E–04	2,78 E–04	2,63 E–04	2,65 E–04	2,93 E–04	3,39 E–04	4,31 E–04	3,28 E–04	3,73 E–04	3,48 E–04	4,15 E–04	4,50 E–04	6,26 E–04	2,50 E–04
22 800	1,46 E–03	1,34 E–03	1,23 E–03	6,31 E–04	7,76 E–04	2,66 E–04	2,51 E–04	2,53 E–04	2,79 E–04	3,23 E–04	4,07 E–04	3,16 E–04	3,63 E–04	3,41 E–04	4,05 E–04	4,39 E–04	6,11 E–04	2,46 E–04
23 000	1,53 E–03	1,38 E–03	1,26 E–03	6,50 E–04	7,93 E–04	2,79 E–04	2,64 E–04	2,67 E–04	2,95 E–04	3,44 E–04	4,42 E–04	3,25 E–04	3,62 E–04	3,38 E–04	4,02 E–04	4,35 E–04	6,05 E–04	2,44 E–04
23 200	2,43 E–03	1,89 E–03	1,67 E–03	9,35 E–04	1,06 E–03	4,83 E–04	4,61 E–04	4,66 E–04	5,29 E–04	6,42 E–04	9,27 E–04	4,81 E–04	4,11 E–04	3,54 E–04	4,20 E–04	4,55 E–04	6,32 E–04	2,56 E–04
23 400	1,99 E–03	1,63 E–03	1,45 E–03	7,92 E–04	9,20 E–04	3,85 E–04	3,66 E–04	3,70 E–04	4,17 E–04	5,00 E–04	6,98 E–04	4,04 E–04	3,81 E–04	3,41 E–04	4,06 E–04	4,40 E–04	6,11 E–04	2,46 E–04
23 500	1,85 E–03	1,54 E–03	1,38 E–03	7,45 E–04	8,73 E–04	3,56 E–04	3,38 E–04	3,42 E–04	3,83 E–04	4,58 E–04	6,31 E–04	3,80 E–04	3,71 E–04	3,36 E–04	4,01 E–04	4,35 E–04	6,03 E–04	2,41 E–04
23 600	1,69 E–03	1,45 E–03	1,31 E–03	6,92 E–04	8,25 E–04	3,16 E–04	3,00 E–04	3,03 E–04	3,38 E–04	4,00 E–04	5,39 E–04	3,48 E–04	3,57 E–04	3,29 E–04	3,91 E–04	4,23 E–04	5,87 E–04	2,37 E–04
23 700	1,65 E–03	1,42 E–03	1,29 E–03	6,78 E–04	8,11 E–04	3,07 E–04	2,91 E–04	2,93 E–04	3,27 E–04	3,86 E–04	5,18 E–04	3,39 E–04	3,51 E–04	3,24 E–04	3,85 E–04	4,17 E–04	5,78 E–04	2,34 E–04
23 800	1,59 E–03	1,39 E–03	1,26 E–03	6,59 E–04	7,90 E–04	2,95 E–04	2,80 E–04	2,82 E–04	3,14 E–04	3,71 E–04	4,94 E–04	3,29 E–04	3,45 E–04	3,20 E–04	3,81 E–04	4,12 E–04	5,71 E–04	2,31 E–04
24 000	2,54 E–03	1,48 E–03	1,28 E–03	4,70 E–04	5,55 E–04	1,75 E–04	1,62 E–04	1,62 E–04	1,76 E–04	1,98 E–04	2,32 E–04	2,14 E–04	2,64 E–04	2,56 E–04	3,07 E–04	3,29 E–04	4,52 E–04	1,81 E–04
30 000	2,39 E–03	1,28 E–03	1,10 E–03	3,65 E–04	4,19 E–04	1,36 E–04	1,26 E–04	1,26 E–04	1,36 E–04	1,53 E–04	1,78 E–04	1,67 E–04	2,07 E–04	2,01 E–04	2,44 E–04	2,57 E–04	3,43 E–04	1,35 E–04

Продолжение таблицы 5.3

Высота, км	Плотность потока, $м^{-2} \cdot год^{-1}$																	
	2,5°	7,5°	12,5°	17,5°	22,5°	27,5°	32,5°	37,5°	42,5°	47,5°	52,5°	57,5°	62,5°	67,5°	72,5°	77,5°	82,5°	87,5°
31 000	2,77 E–03	1,37 E–03	1,16 E–03	3,54 E–04	3,94 E–04	1,32 E–04	1,22 E–04	1,21 E–04	1,31 E–04	1,46 E–04	1,70 E–04	1,59 E–04	1,97 E–04	1,91 E–04	2,33 E–04	2,45 E–04	3,27 E–04	1,27 E–04
32 000	2,71 E–03	1,31 E–03	1,09 E–03	3,23 E–04	3,54 E–04	1,22 E–04	1,12 E–04	1,11 E–04	1,21 E–04	1,35 E–04	1,58 E–04	1,46 E–04	1,81 E–04	1,75 E–04	2,14 E–04	2,26 E–04	3,02 E–04	1,15 E–04
33 000	3,62 E–03	1,59 E–03	1,31 E–03	3,28 E–04	3,37 E–04	1,20 E–04	1,10 E–04	1,08 E–04	1,16 E–04	1,30 E–04	1,52 E–04	1,39 E–04	1,71 E–04	1,65 E–04	2,03 E–04	2,15 E–04	2,89 E–04	1,08 E–04
34 000	4,16 E–03	1,72 E–03	1,39 E–03	3,10 E–04	2,98 E–04	1,15 E–04	1,04 E–04	1,02 E–04	1,10 E–04	1,23 E–04	1,43 E–04	1,29 E–04	1,58 E–04	1,53 E–04	1,89 E–04	2,04 E–04	2,74 E–04	9,82 E–05
35 000	5,37 E–03	2,13 E–03	1,71 E–03	3,35 E–04	3,01 E–04	1,15 E–04	1,02 E–04	9,89 E–05	1,06 E–04	1,18 E–04	1,39 E–04	1,23 E–04	1,49 E–04	1,44 E–04	1,77 E–04	1,91 E–04	2,57 E–04	9,39 E–05
35 500	7,55 E–03	2,86 E–03	2,26 E–03	3,76 E–04	3,01 E–04	1,22 E–04	1,06 E–04	1,01 E–04	1,08 E–04	1,19 E–04	1,40 E–04	1,21 E–04	1,45 E–04	1,39 E–04	1,73 E–04	1,87 E–04	2,52 E–04	9,01 E–05
35 600	1,00 E–02	3,70 E–03	2,91 E–03	4,38 E–04	3,22 E–04	1,33 E–04	1,14 E–04	1,06 E–04	1,14 E–04	1,24 E–04	1,46 E–04	1,24 E–04	1,47 E–04	1,41 E–04	1,75 E–04	1,90 E–04	2,57 E–04	9,18 E–05
35 700	1,29 E–02	4,68 E–03	3,67 E–03	5,08 E–04	3,44 E–04	1,44 E–04	1,20 E–04	1,10 E–04	1,17 E–04	1,27 E–04	1,49 E–04	1,24 E–04	1,45 E–04	1,39 E–04	1,72 E–04	1,86 E–04	2,51 E–04	9,08 E–05
35 710	1,44 E–02	5,22 E–03	4,09 E–03	5,51 E–04	3,62 E–04	1,52 E–04	1,25 E–04	1,15 E–04	1,22 E–04	1,32 E–04	1,55 E–04	1,27 E–04	1,48 E–04	1,43 E–04	1,76 E–04	1,90 E–04	2,55 E–04	9,27 E–05
35 720	1,55 E–02	5,59 E–03	4,37 E–03	5,71 E–04	3,61 E–04	1,55 E–04	1,27 E–04	1,15 E–04	1,22 E–04	1,31 E–04	1,54 E–04	1,25 E–04	1,45 E–04	1,39 E–04	1,72 E–04	1,86 E–04	2,52 E–04	9,05 E–05
35 730	1,76 E–02	6,30 E–03	4,91 E–03	6,24 E–04	3,79 E–04	1,65 E–04	1,33 E–04	1,20 E–04	1,27 E–04	1,36 E–04	1,60 E–04	1,27 E–04	1,47 E–04	1,41 E–04	1,75 E–04	1,89 E–04	2,54 E–04	9,12 E–05
35 740	2,33 E–02	8,24 E–03	6,42 E–03	7,61 E–04	4,19 E–04	1,88 E–04	1,47 E–04	1,29 E–04	1,36 E–04	1,44 E–04	1,69 E–04	1,29 E–04	1,45 E–04	1,39 E–04	1,72 E–04	1,86 E–04	2,51 E–04	9,02 E–05
35 750	3,07 E–02	1,08 E–02	8,38 E–03	9,49 E–04	4,83 E–04	2,22 E–04	1,70 E–04	1,46 E–04	1,53 E–04	1,59 E–04	1,87 E–04	1,37 E–04	1,50 E–04	1,44 E–04	1,78 E–04	1,93 E–04	2,61 E–04	9,43 E–05
35 760	5,23 E–02	1,82 E–02	1,41 E–02	1,48 E–03	6,41 E–04	3,11 E–04	2,26 E–04	1,84 E–04	1,91 E–04	1,92 E–04	2,27 E–04	1,47 E–04	1,49 E–04	1,43 E–04	1,76 E–04	1,90 E–04	2,55 E–04	9,29 E–05
35 770	1,05 E–01	3,61 E–02	2,79 E–02	2,75 E–03	1,01 E–03	5,29 E–04	3,64 E–04	2,78 E–04	2,85 E–04	2,75 E–04	3,24 E–04	1,74 E–04	1,47 E–04	1,41 E–04	1,75 E–04	1,89 E–04	2,55 E–04	9,11 E–05
35 780	1,10 E–01	3,77 E–02	2,92 E–02	2,87 E–03	1,06 E–03	5,50 E–04	3,79 E–04	2,89 E–04	2,95 E–04	2,84 E–04	3,35 E–04	1,79 E–04	1,50 E–04	1,44 E–04	1,78 E–04	1,93 E–04	2,61 E–04	9,43 E–05
35 790	8,25 E–02	2,85 E–02	2,20 E–02	2,20 E–03	8,48 E–04	4,35 E–04	3,05 E–04	2,37 E–04	2,44 E–04	2,39 E–04	2,82 E–04	1,61 E–04	1,46 E–04	1,41 E–04	1,74 E–04	1,89 E–04	2,55 E–04	9,05 E–05

Продолжение таблицы 5.3

Высота, км	Плотность потока, $м^{-2} \cdot год^{-1}$																	
	2,5°	7,5°	12,5°	17,5°	22,5°	27,5°	32,5°	37,5°	42,5°	47,5°	52,5°	57,5°	62,5°	67,5°	72,5°	77,5°	82,5°	87,5°
35 800	6,27 E–02	2,17 E–02	1,68 E–02	1,72 E–03	7,12 E–04	3,54 E–04	2,54 E–04	2,02 E–04	2,09 E–04	2,09 E–04	2,46 E–04	1,52 E–04	1,48 E–04	1,42 E–04	1,75 E–04	1,90 E–04	2,57 E–04	9,25 E–05
35 810	5,32 E–02	1,85 E–02	1,43 E–02	1,50 E–03	6,50 E–04	3,15 E–04	2,29 E–04	1,86 E–04	1,93 E–04	1,95 E–04	2,29 E–04	1,49 E–04	1,50 E–04	1,44 E–04	1,77 E–04	1,92 E–04	2,60 E–04	9,46 E–05
35 820	4,47 E–02	1,55 E–02	1,20 E–02	1,28 E–03	5,72 E–04	2,77 E–04	2,04 E–04	1,68 E–04	1,75 E–04	1,78 E–04	2,10 E–04	1,41 E–04	1,46 E–04	1,40 E–04	1,73 E–04	1,87 E–04	2,52 E–04	9,00 E–05
35 830	3,87 E–02	1,35 E–02	1,05 E–02	1,14 E–03	5,42 E–04	2,53 E–04	1,90 E–04	1,59 E–04	1,66 E–04	1,70 E–04	2,00 E–04	1,40 E–04	1,49 E–04	1,43 E–04	1,76 E–04	1,90 E–04	2,55 E–04	9,31 E–05
35 840	3,43 E–02	1,20 E–02	9,31 E–03	1,03 E–03	5,08 E–04	2,34 E–04	1,77 E–04	1,50 E–04	1,57 E–04	1,62 E–04	1,91 E–04	1,36 E–04	1,47 E–04	1,41 E–04	1,73 E–04	1,88 E–04	2,54 E–04	9,27 E–05
35 850	3,01 E–02	1,06 E–02	8,20 E–03	9,27 E–04	4,70 E–04	2,17 E–04	1,67 E–04	1,43 E–04	1,50 E–04	1,57 E–04	1,84 E–04	1,35 E–04	1,48 E–04	1,42 E–04	1,76 E–04	1,91 E–04	2,58 E–04	9,21 E–05
35 860	2,75 E–02	9,65 E–03	7,50 E–03	8,62 E–04	4,50 E–04	2,05 E–04	1,59 E–04	1,37 E–04	1,44 E–04	1,51 E–04	1,78 E–04	1,32 E–04	1,46 E–04	1,40 E–04	1,73 E–04	1,88 E–04	2,54 E–04	9,14 E–05
35 870	2,49 E–02	8,77 E–03	6,83 E–03	8,13 E–04	4,51 E–04	1,98 E–04	1,55 E–04	1,36 E–04	1,43 E–04	1,51 E–04	1,77 E–04	1,36 E–04	1,52 E–04	1,47 E–04	1,80 E–04	1,95 E–04	2,63 E–04	9,66 E–05
35 880	2,36 E–02	8,31 E–03	6,46 E–03	7,62 E–04	4,13 E–04	1,88 E–04	1,48 E–04	1,29 E–04	1,37 E–04	1,44 E–04	1,69 E–04	1,29 E–04	1,44 E–04	1,39 E–04	1,72 E–04	1,87 E–04	2,53 E–04	8,94 E–05
35 890	2,33 E–02	8,21 E–03	6,40 E–03	7,61 E–04	4,21 E–04	1,86 E–04	1,46 E–04	1,28 E–04	1,35 E–04	1,43 E–04	1,68 E–04	1,28 E–04	1,43 E–04	1,37 E–04	1,69 E–04	1,83 E–04	2,46 E–04	8,99 E–05
35 900	1,87 E–02	6,61 E–03	5,15 E–03	6,35 E–04	3,68 E–04	1,65 E–04	1,32 E–04	1,18 E–04	1,25 E–04	1,33 E–04	1,56 E–04	1,23 E–04	1,40 E–04	1,34 E–04	1,67 E–04	1,81 E–04	2,44 E–04	8,60 E–05
36 000	1,75 E–02	6,24 E–03	4,87 E–03	6,16 E–04	3,72 E–04	1,61 E–04	1,30 E–04	1,17 E–04	1,24 E–04	1,32 E–04	1,56 E–04	1,23 E–04	1,42 E–04	1,36 E–04	1,68 E–04	1,82 E–04	2,45 E–04	8,86 E–05
36 100	1,63 E–02	5,81 E–03	4,53 E–03	5,72 E–04	3,43 E–04	1,53 E–04	1,24 E–04	1,11 E–04	1,18 E–04	1,27 E–04	1,49 E–04	1,18 E–04	1,36 E–04	1,31 E–04	1,62 E–04	1,77 E–04	2,38 E–04	8,36 E–05
36 200	1,20 E–02	4,34 E–03	3,40 E–03	4,68 E–04	3,12 E–04	1,34 E–04	1,12 E–04	1,03 E–04	1,09 E–04	1,19 E–04	1,39 E–04	1,15 E–04	1,35 E–04	1,29 E–04	1,60 E–04	1,75 E–04	2,35 E–04	8,31 E–05
36 300	9,93 E–03	3,62 E–03	2,84 E–03	4,14 E–04	2,94 E–04	1,24 E–04	1,05 E–04	9,79 E–05	1,05 E–04	1,14 E–04	1,34 E–04	1,13 E–04	1,33 E–04	1,28 E–04	1,58 E–04	1,73 E–04	2,34 E–04	8,25 E–05
36 400	7,85 E–03	2,91 E–03	2,30 E–03	3,64 E–04	2,81 E–04	1,14 E–04	9,81 E–05	9,24 E–05	9,90 E–05	1,09 E–04	1,28 E–04	1,09 E–04	1,30 E–04	1,25 E–04	1,54 E–04	1,67 E–04	2,26 E–04	8,12 E–05
36 500	4,48 E–03	1,75 E–03	1,39 E–03	2,68 E–04	2,37 E–04	9,43 E–05	8,36 E–05	8,06 E–05	8,68 E–05	9,65 E–05	1,13 E–04	9,97 E–05	1,21 E–04	1,15 E–04	1,43 E–04	1,56 E–04	2,11 E–04	7,51 E–05

Окончание таблицы 5.3

Высота, км	Плотность потока, $м^{-2} \cdot год^{-1}$																	
	2,5°	7,5°	12,5°	17,5°	22,5°	27,5°	32,5°	37,5°	42,5°	47,5°	52,5°	57,5°	62,5°	67,5°	72,5°	77,5°	82,5°	87,5°
37 000	2,53 E–03	1,05 E–03	8,47 E–04	1,95 E–04	1,88 E–04	7,53 E–05	6,81 E–05	6,65 E–05	7,18 E–05	8,04 E–05	9,48 E–05	8,40 E–05	1,02 E–04	9,71 E–05	1,20 E–04	1,32 E–04	1,81 E–04	6,35 E–05
38 000	1,55 E–03	6,89 E–04	5,62 E–04	1,48 E–04	1,51 E–04	6,01 E–05	5,48 E–05	5,38 E–05	5,81 E–05	6,53 E–05	7,72 E–05	6,86 E–05	8,37 E–05	7,87 E–05	9,71 E–05	1,08 E–04	1,49 E–04	5,23 E–05
39 000	1,03 E–03	4,86 E–04	3,98 E–04	1,16 E–04	1,21 E–04	4,87 E–05	4,46 E–05	4,39 E–05	4,73 E–05	5,34 E–05	6,34 E–05	5,61 E–05	6,86 E–05	6,37 E–05	7,86 E–05	8,78 E–05	1,21 E–04	4,22 E–05

Таблица 5.4 — Плотность потока КО размером от 0,5 до 1,0 мм относительно ИСК

Высота, км	Плотность потока, $м^{-2} \cdot год^{-1}$																	
	2,5°	7,5°	12,5°	17,5°	22,5°	27,5°	32,5°	37,5°	42,5°	47,5°	52,5°	57,5°	62,5°	67,5°	72,5°	77,5°	82,5°	87,5°
200	5,29 E–02	5,29 E–02	5,56 E–02	5,56 E–02	5,79 E–02	5,63 E–02	5,42 E–02	5,54 E–02	6,15 E–02	6,99 E–02	7,87 E–02	7,18 E–02	8,87 E–02	9,42 E–02	1,29 E–01	1,44 E–01	2,12 E–01	5,43 E–02
300	1,10 E–01	1,10 E–01	1,16 E–01	1,16 E–01	1,20 E–01	1,17 E–01	1,13 E–01	1,15 E–01	1,28 E–01	1,45 E–01	1,64 E–01	1,49 E–01	1,84 E–01	1,96 E–01	2,69 E–01	2,99 E–01	4,42 E–01	1,13 E–01
400	2,22 E–01	2,22 E–01	2,34 E–01	2,34 E–01	2,43 E–01	2,37 E–01	2,28 E–01	2,33 E–01	2,58 E–01	2,94 E–01	3,31 E–01	3,02 E–01	3,73 E–01	3,96 E–01	5,43 E–01	6,05 E–01	8,93 E–01	2,28 E–01
500	3,22 E–01	3,22 E–01	3,38 E–01	3,38 E–01	3,52 E–01	3,42 E–01	3,29 E–01	3,37 E–01	3,74 E–01	4,25 E–01	4,78 E–01	4,36 E–01	5,39 E–01	5,73 E–01	7,86 E–01	8,75 E–01	1,29 E+00	3,30 E–01
600	3,68 E–01	3,68 E–01	3,86 E–01	3,86 E–01	4,02 E–01	3,91 E–01	3,76 E–01	3,85 E–01	4,27 E–01	4,86 E–01	5,47 E–01	4,98 E–01	6,16 E–01	6,54 E–01	8,98 E–01	1,00 E+00	1,48 E+00	3,77 E–01
700	4,65 E–01	4,65 E–01	4,89 E–01	4,89 E–01	5,09 E–01	4,95 E–01	4,76 E–01	4,88 E–01	5,41 E–01	6,15 E–01	6,92 E–01	6,31 E–01	7,80 E–01	8,28 E–01	1,14 E+00	1,27 E+00	1,87 E+00	4,77 E–01
800	4,26 E–01	4,26 E–01	4,40 E–01	4,40 E–01	4,58 E–01	4,56 E–01	4,50 E–01	4,70 E–01	5,17 E–01	5,77 E–01	6,42 E–01	6,82 E–01	8,57 E–01	8,99 E–01	1,15 E+00	1,53 E+00	2,08 E+00	5,13 E–01
900	2,90 E–01	2,90 E–01	2,98 E–01	2,98 E–01	3,10 E–01	3,11 E–01	3,10 E–01	3,26 E–01	3,58 E–01	3,97 E–01	4,39 E–01	4,91 E–01	6,20 E–01	6,48 E–01	8,15 E–01	1,13 E+00	1,51 E+00	3,69 E–01
1000	1,64 E–01	1,64 E–01	1,68 E–01	1,68 E–01	1,75 E–01	1,76 E–01	1,76 E–01	1,85 E–01	2,02 E–01	2,25 E–01	2,48 E–01	2,78 E–01	3,52 E–01	3,68 E–01	4,62 E–01	6,44 E–01	8,55 E–01	2,09 E–01
1100	9,57 E–02	9,57 E–02	9,83 E–02	9,83 E–02	1,02 E–01	1,03 E–01	1,02 E–01	1,07 E–01	1,18 E–01	1,31 E–01	1,45 E–01	1,61 E–01	2,04 E–01	2,13 E–01	2,68 E–01	3,72 E–01	4,95 E–01	1,21 E–01
1200	7,15 E–02	7,15 E–02	7,33 E–02	7,33 E–02	7,62 E–02	7,66 E–02	7,64 E–02	8,04 E–02	8,81 E–02	9,78 E–02	1,08 E–01	1,21 E–01	1,53 E–01	1,60 E–01	2,01 E–01	2,80 E–01	3,72 E–01	9,10 E–02

Продолжение таблицы 5.4

Высота, км	Плотность потока, $м^{-2} \cdot год^{-1}$																	
	2,5°	7,5°	12,5°	17,5°	22,5°	27,5°	32,5°	37,5°	42,5°	47,5°	52,5°	57,5°	62,5°	67,5°	72,5°	77,5°	82,5°	87,5°
1300	7,22 E–02	7,22 E–02	7,41 E–02	7,41 E–02	7,60 E–02	7,55 E–02	7,68 E–02	8,13 E–02	8,95 E–02	1,01 E–01	1,13 E–01	1,22 E–01	1,51 E–01	1,63 E–01	2,28 E–01	2,38 E–01	2,50 E–01	5,21 E–02
1400	1,17 E–01	1,17 E–01	1,20 E–01	1,20 E–01	1,22 E–01	1,20 E–01	1,24 E–01	1,32 E–01	1,46 E–01	1,66 E–01	1,86 E–01	1,96 E–01	2,40 E–01	2,67 E–01	4,00 E–01	3,31 E–01	2,51 E–01	3,55 E–02
1500	6,43 E–02	6,43 E–02	6,60 E–02	6,60 E–02	6,72 E–02	6,60 E–02	6,80 E–02	7,24 E–02	8,00 E–02	9,11 E–02	1,02 E–01	1,07 E–01	1,32 E–01	1,46 E–01	2,19 E–01	1,82 E–01	1,41 E–01	2,06 E–02
1600	2,89 E–02	2,89 E–02	2,97 E–02	2,97 E–02	3,03 E–02	2,98 E–02	3,05 E–02	3,24 E–02	3,58 E–02	4,07 E–02	4,57 E–02	4,78 E–02	5,87 E–02	6,48 E–02	9,53 E–02	8,39 E–02	7,29 E–02	1,25 E–02
1700	1,70 E–02	1,70 E–02	1,75 E–02	1,75 E–02	1,79 E–02	1,76 E–02	1,80 E–02	1,90 E–02	2,10 E–02	2,39 E–02	2,68 E–02	2,80 E–02	3,44 E–02	3,78 E–02	5,50 E–02	5,02 E–02	4,67 E–02	8,66 E–03
1800	1,34 E–02	1,34 E–02	1,38 E–02	1,38 E–02	1,41 E–02	1,39 E–02	1,42 E–02	1,50 E–02	1,66 E–02	1,88 E–02	2,11 E–02	2,20 E–02	2,71 E–02	2,98 E–02	4,35 E–02	3,93 E–02	3,61 E–02	6,59 E–03
1900	1,00 E–02	1,00 E–02	1,03 E–02	1,03 E–02	1,06 E–02	1,04 E–02	1,06 E–02	1,12 E–02	1,24 E–02	1,41 E–02	1,58 E–02	1,64 E–02	2,02 E–02	2,22 E–02	3,25 E–02	2,94 E–02	2,70 E–02	4,96 E–03
2000	1,72 E–03	1,57 E–03	1,72 E–03	1,57 E–03	1,68 E–03	1,45 E–03	1,43 E–03	1,48 E–03	1,64 E–03	1,85 E–03	2,08 E–03	2,05 E–03	2,54 E–03	2,72 E–03	3,75 E–03	4,00 E–03	5,05 E–03	1,23 E–03
4000	9,01 E–04	8,72 E–04	8,28 E–04	4,66 E–04	5,84 E–04	2,24 E–04	2,14 E–04	2,19 E–04	2,40 E–04	2,71 E–04	3,06 E–04	2,98 E–04	3,75 E–04	3,87 E–04	4,85 E–04	5,31 E–04	7,49 E–04	2,57 E–04
9000	3,02 E–04	2,83 E–04	2,61 E–04	1,41 E–04	1,74 E–04	6,83 E–05	6,47 E–05	6,55 E–05	7,14 E–05	8,04 E–05	9,08 E–05	8,77 E–05	1,10 E–04	1,13 E–04	1,42 E–04	1,57 E–04	2,24 E–04	7,59 E–05
18 000	2,70 E–04	2,42 E–04	2,18 E–04	1,25 E–04	1,47 E–04	6,86 E–05	6,64 E–05	6,88 E–05	7,45 E–05	8,49 E–05	1,00 E–04	1,06 E–04	1,52 E–04	7,69 E–05	8,89 E–05	9,71 E–05	1,38 E–04	4,93 E–05
19 000	1,12 E–03	7,96 E–04	6,53 E–04	5,29 E–04	5,21 E–04	4,33 E–04	4,35 E–04	4,68 E–04	5,03 E–04	5,83 E–04	7,23 E–04	8,48 E–04	1,35 E–03	1,58 E–04	9,46 E–05	1,03 E–04	1,46 E–04	5,31 E–05
19 100	1,25 E–03	8,80 E–04	7,18 E–04	5,91 E–04	5,78 E–04	4,90 E–04	4,93 E–04	5,31 E–04	5,71 E–04	6,62 E–04	8,23 E–04	9,67 E–04	1,54 E–03	1,69 E–04	9,29 E–05	1,01 E–04	1,44 E–04	5,22 E–05
19 200	7,08 E–04	5,29 E–04	4,43 E–04	3,34 E–04	3,41 E–04	2,57 E–04	2,57 E–04	2,75 E–04	2,96 E–04	3,43 E–04	4,23 E–04	4,91 E–04	7,75 E–04	1,17 E–04	8,86 E–05	9,64 E–05	1,37 E–04	4,99 E–05
19 300	4,17 E–04	3,38 E–04	2,93 E–04	1,96 E–04	2,13 E–04	1,32 E–04	1,31 E–04	1,39 E–04	1,49 E–04	1,72 E–04	2,09 E–04	2,37 E–04	3,65 E–04	8,80 E–05	8,50 E–05	9,25 E–05	1,31 E–04	4,80 E–05
19 400	2,93 E–04	2,54 E–04	2,26 E–04	1,37 E–04	1,56 E–04	8,08 E–05	7,91 E–05	8,30 E–05	8,95 E–05	1,03 E–04	1,23 E–04	1,35 E–04	2,01 E–04	7,30 E–05	7,90 E–05	8,59 E–05	1,22 E–04	4,46 E–05
19 600	2,67 E–04	2,36 E–04	2,12 E–04	1,24 E–04	1,45 E–04	6,95 E–05	6,77 E–05	7,07 E–05	7,63 E–05	8,72 E–05	1,04 E–04	1,13 E–04	1,65 E–04	6,91 E–05	7,67 E–05	8,34 E–05	1,18 E–04	4,37 E–05

Продолжение таблицы 5.4

Высота, км	Плотность потока, $м^{-2} \cdot год^{-1}$																	
	2,5°	7,5°	12,5°	17,5°	22,5°	27,5°	32,5°	37,5°	42,5°	47,5°	52,5°	57,5°	62,5°	67,5°	72,5°	77,5°	82,5°	87,5°
19 800	3,10 E–04	2,65 E–04	2,35 E–04	1,45 E–04	1,64 E–04	8,78 E–05	8,62 E–05	9,07 E–05	9,79 E–05	1,12 E–04	1,35 E–04	1,50 E–04	2,26 E–04	7,29 E–05	7,66 E–05	8,32 E–05	1,18 E–04	4,37 E–05
20 000	3,51 E–04	2,80 E–04	2,45 E–04	1,47 E–04	1,65 E–04	8,51 E–05	8,24 E–05	8,51 E–05	9,42 E–05	1,11 E–04	1,48 E–04	1,15 E–04	1,45 E–04	6,60 E–05	7,44 E–05	8,08 E–05	1,14 E–04	4,26 E–05
20 100	3,37 E–04	2,68 E–04	2,36 E–04	1,37 E–04	1,55 E–04	7,49 E–05	7,18 E–05	7,33 E–05	8,20 E–05	9,79 E–05	1,34 E–04	8,76 E–05	9,57 E–05	6,17 E–05	7,30 E–05	7,92 E–05	1,12 E–04	4,20 E–05
20 200	2,65 E–04	2,25 E–04	2,02 E–04	1,12 E–04	1,31 E–04	5,65 E–05	5,40 E–05	5,50 E–05	6,10 E–05	7,16 E–05	9,38 E–05	6,86 E–05	7,92 E–05	5,85 E–05	6,99 E–05	7,58 E–05	1,07 E–04	4,02 E–05
20 300	2,39 E–04	2,10 E–04	1,90 E–04	1,03 E–04	1,23 E–04	5,00 E–05	4,77 E–05	4,85 E–05	5,36 E–05	6,24 E–05	7,98 E–05	6,17 E–05	7,29 E–05	5,71 E–05	6,85 E–05	7,43 E–05	1,05 E–04	3,95 E–05
20 400	3,15 E–04	2,52 E–04	2,23 E–04	1,26 E–04	1,44 E–04	6,65 E–05	6,35 E–05	6,44 E–05	7,24 E–05	8,67 E–05	1,20 E–04	7,26 E–05	7,28 E–05	5,75 E–05	6,91 E–05	7,49 E–05	1,06 E–04	4,00 E–05
20 600	2,43 E–04	2,10 E–04	1,89 E–04	1,02 E–04	1,21 E–04	4,93 E–05	4,69 E–05	4,75 E–05	5,28 E–05	6,21 E–05	8,15 E–05	5,71 E–05	6,28 E–05	5,38 E–05	6,48 E–05	7,02 E–05	9,88 E–05	3,77 E–05
20 800	2,29 E–04	2,01 E–04	1,82 E–04	9,74 E–05	1,17 E–04	4,55 E–05	4,32 E–05	4,37 E–05	4,85 E–05	5,67 E–05	7,36 E–05	5,31 E–05	5,92 E–05	5,22 E–05	6,28 E–05	6,79 E–05	9,56 E–05	3,68 E–05
21 000	2,41 E–04	2,07 E–04	1,87 E–04	1,01 E–04	1,20 E–04	4,77 E–05	4,53 E–05	4,59 E–05	5,11 E–05	6,02 E–05	7,98 E–05	5,41 E–05	5,81 E–05	5,12 E–05	6,15 E–05	6,64 E–05	9,33 E–05	3,62 E–05
21 100	2,60 E–04	2,17 E–04	1,95 E–04	1,06 E–04	1,25 E–04	5,20 E–05	4,94 E–05	5,00 E–05	5,60 E–05	6,65 E–05	9,02 E–05	5,71 E–05	5,85 E–05	5,12 E–05	6,16 E–05	6,65 E–05	9,35 E–05	3,63 E–05
21 200	2,78 E–04	2,27 E–04	2,02 E–04	1,12 E–04	1,29 E–04	5,62 E–05	5,35 E–05	5,42 E–05	6,09 E–05	7,28 E–05	1,01 E–04	5,99 E–05	5,84 E–05	5,07 E–05	6,09 E–05	6,59 E–05	9,25 E–05	3,59 E–05
21 300	2,87 E–04	2,33 E–04	2,07 E–04	1,15 E–04	1,32 E–04	5,78 E–05	5,50 E–05	5,57 E–05	6,27 E–05	7,52 E–05	1,05 E–04	6,10 E–05	5,85 E–05	5,07 E–05	6,08 E–05	6,57 E–05	9,22 E–05	3,61 E–05
21 400	3,77 E–04	2,81 E–04	2,44 E–04	1,42 E–04	1,57 E–04	7,83 E–05	7,47 E–05	7,57 E–05	8,63 E–05	1,05 E–04	1,55 E–04	7,61 E–05	6,19 E–05	5,07 E–05	6,09 E–05	6,58 E–05	9,22 E–05	3,60 E–05
21 600	2,58 E–04	2,13 E–04	1,91 E–04	1,04 E–04	1,22 E–04	5,05 E–05	4,80 E–05	4,85 E–05	5,45 E–05	6,50 E–05	8,93 E–05	5,43 E–05	5,37 E–05	4,73 E–05	5,66 E–05	6,11 E–05	8,55 E–05	3,39 E–05
21 800	2,27 E–04	1,95 E–04	1,76 E–04	9,38 E–05	1,12 E–04	4,33 E–05	4,11 E–05	4,16 E–05	4,63 E–05	5,47 E–05	7,31 E–05	4,84 E–05	5,08 E–05	4,58 E–05	5,46 E–05	5,89 E–05	8,24 E–05	3,29 E–05
22 000	2,53 E–04	2,10 E–04	1,88 E–04	1,02 E–04	1,19 E–04	4,90 E–05	4,65 E–05	4,71 E–05	5,28 E–05	6,31 E–05	8,70 E–05	5,24 E–05	5,13 E–05	4,54 E–05	5,41 E–05	5,84 E–05	8,15 E–05	3,28 E–05
22 200	2,11 E–04	1,84 E–04	1,67 E–04	8,82 E–05	1,06 E–04	3,97 E–05	3,76 E–05	3,80 E–05	4,23 E–05	4,98 E–05	6,59 E–05	4,48 E–05	4,78 E–05	4,36 E–05	5,19 E–05	5,61 E–05	7,82 E–05	3,15 E–05

Продолжение таблицы 5.4

Высота, км	Плотность потока, $м^{-2} \cdot год^{-1}$																	
	2,5°	7,5°	12,5°	17,5°	22,5°	27,5°	32,5°	37,5°	42,5°	47,5°	52,5°	57,5°	62,5°	67,5°	72,5°	77,5°	82,5°	87,5°
22 400	1,96 E–04	1,74 E–04	1,59 E–04	8,27 E–05	1,00 E–04	3,63 E–05	3,44 E–05	3,47 E–05	3,85 E–05	4,49 E–05	5,83 E–05	4,19 E–05	4,62 E–05	4,26 E–05	5,08 E–05	5,50 E–05	7,65 E–05	3,07 E–05
22 600	1,82 E–04	1,66 E–04	1,52 E–04	7,81 E–05	9,56 E–05	3,34 E–05	3,16 E–05	3,19 E–05	3,52 E–05	4,08 E–05	5,19 E–05	3,95 E–05	4,49 E–05	4,19 E–05	5,00 E–05	5,41 E–05	7,53 E–05	3,01 E–05
22 800	1,76 E–04	1,62 E–04	1,48 E–04	7,59 E–05	9,34 E–05	3,20 E–05	3,02 E–05	3,05 E–05	3,36 E–05	3,88 E–05	4,90 E–05	3,81 E–05	4,37 E–05	4,10 E–05	4,88 E–05	5,28 E–05	7,35 E–05	2,95 E–05
23 000	1,84 E–04	1,66 E–04	1,51 E–04	7,82 E–05	9,53 E–05	3,36 E–05	3,18 E–05	3,21 E–05	3,55 E–05	4,13 E–05	5,32 E–05	3,91 E–05	4,36 E–05	4,07 E–05	4,83 E–05	5,24 E–05	7,28 E–05	2,94 E–05
23 200	2,93 E–04	2,28 E–04	2,00 E–04	1,13 E–04	1,27 E–04	5,81 E–05	5,54 E–05	5,61 E–05	6,36 E–05	7,72 E–05	1,11 E–04	5,78 E–05	4,95 E–05	4,26 E–05	5,06 E–05	5,48 E–05	7,60 E–05	3,07 E–05
23 400	2,40 E–04	1,96 E–04	1,75 E–04	9,52 E–05	1,11 E–04	4,64 E–05	4,41 E–05	4,46 E–05	5,01 E–05	6,01 E–05	8,40 E–05	4,85 E–05	4,59 E–05	4,11 E–05	4,89 E–05	5,29 E–05	7,35 E–05	2,96 E–05
23 500	2,23 E–04	1,85 E–04	1,66 E–04	8,96 E–05	1,05 E–04	4,28 E–05	4,07 E–05	4,11 E–05	4,61 E–05	5,50 E–05	7,59 E–05	4,57 E–05	4,46 E–05	4,04 E–05	4,82 E–05	5,23 E–05	7,25 E–05	2,90 E–05
23 600	2,03 E–04	1,74 E–04	1,57 E–04	8,33 E–05	9,93 E–05	3,80 E–05	3,61 E–05	3,64 E–05	4,06 E–05	4,81 E–05	6,48 E–05	4,18 E–05	4,29 E–05	3,95 E–05	4,70 E–05	5,09 E–05	7,06 E–05	2,85 E–05
23 700	1,98 E–04	1,71 E–04	1,55 E–04	8,16 E–05	9,75 E–05	3,69 E–05	3,50 E–05	3,53 E–05	3,94 E–05	4,65 E–05	6,24 E–05	4,08 E–05	4,22 E–05	3,90 E–05	4,64 E–05	5,01 E–05	6,95 E–05	2,82 E–05
23 800	1,92 E–04	1,67 E–04	1,51 E–04	7,92 E–05	9,51 E–05	3,55 E–05	3,37 E–05	3,40 E–05	3,78 E–05	4,46 E–05	5,94 E–05	3,96 E–05	4,15 E–05	3,85 E–05	4,58 E–05	4,95 E–05	6,87 E–05	2,78 E–05
24 000	3,06 E–04	1,77 E–04	1,54 E–04	5,65 E–05	6,68 E–05	2,10 E–05	1,95 E–05	1,95 E–05	2,11 E–05	2,38 E–05	2,79 E–05	2,57 E–05	3,17 E–05	3,08 E–05	3,69 E–05	3,96 E–05	5,43 E–05	2,18 E–05
30 000	2,88 E–04	1,54 E–04	1,32 E–04	4,39 E–05	5,04 E–05	1,64 E–05	1,52 E–05	1,51 E–05	1,64 E–05	1,84 E–05	2,14 E–05	2,00 E–05	2,49 E–05	2,42 E–05	2,94 E–05	3,09 E–05	4,13 E–05	1,62 E–05
31 000	3,33 E–04	1,65 E–04	1,39 E–04	4,26 E–05	4,74 E–05	1,59 E–05	1,46 E–05	1,45 E–05	1,57 E–05	1,76 E–05	2,05 E–05	1,91 E–05	2,37 E–05	2,29 E–05	2,80 E–05	2,95 E–05	3,93 E–05	1,52 E–05
32 000	3,26 E–04	1,57 E–04	1,32 E–04	3,89 E–05	4,26 E–05	1,47 E–05	1,35 E–05	1,34 E–05	1,45 E–05	1,63 E–05	1,89 E–05	1,76 E–05	2,18 E–05	2,10 E–05	2,58 E–05	2,72 E–05	3,64 E–05	1,38 E–05
33 000	4,36 E–04	1,91 E–04	1,57 E–04	3,94 E–05	4,05 E–05	1,45 E–05	1,32 E–05	1,30 E–05	1,40 E–05	1,57 E–05	1,83 E–05	1,67 E–05	2,06 E–05	1,98 E–05	2,44 E–05	2,59 E–05	3,48 E–05	1,30 E–05
34 000	5,01 E–04	2,07 E–04	1,68 E–04	3,73 E–05	3,59 E–05	1,38 E–05	1,25 E–05	1,22 E–05	1,32 E–05	1,47 E–05	1,72 E–05	1,55 E–05	1,90 E–05	1,83 E–05	2,28 E–05	2,45 E–05	3,29 E–05	1,18 E–05
35 000	6,47 E–04	2,57 E–04	2,06 E–04	4,02 E–05	3,62 E–05	1,39 E–05	1,23 E–05	1,19 E–05	1,28 E–05	1,42 E–05	1,67 E–05	1,48 E–05	1,80 E–05	1,73 E–05	2,13 E–05	2,30 E–05	3,09 E–05	1,13 E–05

Продолжение таблицы 5.4

Высота, км	Плотность потока, $м^{-2} \cdot год^{-1}$																	
	2,5°	7,5°	12,5°	17,5°	22,5°	27,5°	32,5°	37,5°	42,5°	47,5°	52,5°	57,5°	62,5°	67,5°	72,5°	77,5°	82,5°	87,5°
35 500	9,08 E–04	3,44 E–04	2,72 E–04	4,52 E–05	3,62 E–05	1,47 E–05	1,27 E–05	1,21 E–05	1,30 E–05	1,43 E–05	1,68 E–05	1,45 E–05	1,74 E–05	1,68 E–05	2,08 E–05	2,25 E–05	3,04 E–05	1,08 E–05
35 600	1,20 E–03	4,45 E–04	3,50 E–04	5,27 E–05	3,88 E–05	1,60 E–05	1,37 E–05	1,28 E–05	1,37 E–05	1,50 E–05	1,75 E–05	1,49 E–05	1,77 E–05	1,70 E–05	2,11 E–05	2,29 E–05	3,09 E–05	1,10 E–05
35 700	1,55 E–03	5,63 E–04	4,42 E–04	6,12 E–05	4,14 E–05	1,73 E–05	1,44 E–05	1,32 E–05	1,41 E–05	1,53 E–05	1,80 E–05	1,49 E–05	1,74 E–05	1,67 E–05	2,07 E–05	2,24 E–05	3,02 E–05	1,09 E–05
35 710	1,74 E–03	6,28 E–04	4,92 E–04	6,62 E–05	4,35 E–05	1,83 E–05	1,51 E–05	1,38 E–05	1,47 E–05	1,59 E–05	1,86 E–05	1,53 E–05	1,78 E–05	1,72 E–05	2,12 E–05	2,28 E–05	3,07 E–05	1,11 E–05
35 720	1,87 E–03	6,72 E–04	5,25 E–04	6,87 E–05	4,34 E–05	1,86 E–05	1,52 E–05	1,38 E–05	1,47 E–05	1,58 E–05	1,86 E–05	1,50 E–05	1,74 E–05	1,67 E–05	2,06 E–05	2,24 E–05	3,03 E–05	1,09 E–05
35 730	2,12 E–03	7,57 E–04	5,91 E–04	7,51 E–05	4,56 E–05	1,98 E–05	1,60 E–05	1,44 E–05	1,53 E–05	1,64 E–05	1,92 E–05	1,53 E–05	1,76 E–05	1,70 E–05	2,10 E–05	2,27 E–05	3,05 E–05	1,10 E–05
35 740	2,80 E–03	9,92 E–04	7,72 E–04	9,16 E–05	5,04 E–05	2,26 E–05	1,77 E–05	1,55 E–05	1,64 E–05	1,73 E–05	2,03 E–05	1,55 E–05	1,75 E–05	1,67 E–05	2,07 E–05	2,24 E–05	3,01 E–05	1,08 E–05
35 750	3,69 E–03	1,30 E–03	1,01 E–03	1,14 E–04	5,81 E–05	2,67 E–05	2,05 E–05	1,75 E–05	1,84 E–05	1,92 E–05	2,25 E–05	1,65 E–05	1,81 E–05	1,74 E–05	2,14 E–05	2,32 E–05	3,14 E–05	1,13 E–05
35 760	6,30 E–03	2,19 E–03	1,69 E–03	1,77 E–04	7,71 E–05	3,74 E–05	2,72 E–05	2,21 E–05	2,30 E–05	2,32 E–05	2,73 E–05	1,77 E–05	1,79 E–05	1,72 E–05	2,12 E–05	2,28 E–05	3,07 E–05	1,12 E–05
35 770	1,26 E–02	4,34 E–03	3,36 E–03	3,30 E–04	1,22 E–04	6,36 E–05	4,38 E–05	3,35 E–05	3,43 E–05	3,31 E–05	3,90 E–05	2,09 E–05	1,76 E–05	1,69 E–05	2,10 E–05	2,28 E–05	3,07 E–05	1,10 E–05
35 780	1,32 E–02	4,54 E–03	3,51 E–03	3,45 E–04	1,27 E–04	6,62 E–05	4,56 E–05	3,47 E–05	3,55 E–05	3,42 E–05	4,03 E–05	2,15 E–05	1,81 E–05	1,73 E–05	2,14 E–05	2,32 E–05	3,14 E–05	1,13 E–05
35 790	9,93 E–03	3,43 E–03	2,65 E–03	2,65 E–04	1,02 E–04	5,24 E–05	3,67 E–05	2,86 E–05	2,94 E–05	2,87 E–05	3,39 E–05	1,94 E–05	1,76 E–05	1,69 E–05	2,10 E–05	2,28 E–05	3,06 E–05	1,09 E–05
35 800	7,54 E–03	2,61 E–03	2,02 E–03	2,07 E–04	8,57 E–05	4,26 E–05	3,05 E–05	2,44 E–05	2,52 E–05	2,51 E–05	2,95 E–05	1,83 E–05	1,78 E–05	1,71 E–05	2,11 E–05	2,29 E–05	3,09 E–05	1,11 E–05
35 810	6,40 E–03	2,22 E–03	1,72 E–03	1,80 E–04	7,82 E–05	3,79 E–05	2,76 E–05	2,24 E–05	2,33 E–05	2,34 E–05	2,76 E–05	1,79 E–05	1,80 E–05	1,73 E–05	2,13 E–05	2,31 E–05	3,12 E–05	1,14 E–05
35 820	5,37 E–03	1,87 E–03	1,45 E–03	1,54 E–04	6,88 E–05	3,33 E–05	2,46 E–05	2,02 E–05	2,11 E–05	2,14 E–05	2,52 E–05	1,69 E–05	1,75 E–05	1,68 E–05	2,08 E–05	2,25 E–05	3,03 E–05	1,08 E–05
35 830	4,65 E–03	1,62 E–03	1,26 E–03	1,37 E–04	6,52 E–05	3,05 E–05	2,28 E–05	1,91 E–05	2,00 E–05	2,05 E–05	2,41 E–05	1,68 E–05	1,79 E–05	1,71 E–05	2,11 E–05	2,28 E–05	3,07 E–05	1,12 E–05
35 840	4,13 E–03	1,44 E–03	1,12 E–03	1,24 E–04	6,11 E–05	2,82 E–05	2,13 E–05	1,80 E–05	1,89 E–05	1,95 E–05	2,30 E–05	1,64 E–05	1,77 E–05	1,69 E–05	2,08 E–05	2,26 E–05	3,05 E–05	1,12 E–05

Окончание таблицы 5.4

Высота, км	Плотность потока, $м^{-2} \cdot год^{-1}$																	
	2,5°	7,5°	12,5°	17,5°	22,5°	27,5°	32,5°	37,5°	42,5°	47,5°	52,5°	57,5°	62,5°	67,5°	72,5°	77,5°	82,5°	87,5°
35 850	3,63 E–03	1,27 E–03	9,86 E–04	1,12 E–04	5,65 E–05	2,61 E–05	2,01 E–05	1,72 E–05	1,81 E–05	1,88 E–05	2,21 E–05	1,62 E–05	1,78 E–05	1,71 E–05	2,11 E–05	2,29 E–05	3,10 E–05	1,11 E–05
35 860	3,31 E–03	1,16 E–03	9,02 E–04	1,04 E–04	5,41 E–05	2,47 E–05	1,91 E–05	1,65 E–05	1,74 E–05	1,82 E–05	2,14 E–05	1,59 E–05	1,76 E–05	1,69 E–05	2,08 E–05	2,26 E–05	3,06 E–05	1,10 E–05
35 870	2,99 E–03	1,05 E–03	8,21 E–04	9,78 E–05	5,43 E–05	2,38 E–05	1,87 E–05	1,63 E–05	1,73 E–05	1,82 E–05	2,14 E–05	1,63 E–05	1,83 E–05	1,76 E–05	2,17 E–05	2,34 E–05	3,16 E–05	1,16 E–05
35 880	2,84 E–03	9,99 E–04	7,77 E–04	9,16 E–05	4,97 E–05	2,27 E–05	1,78 E–05	1,56 E–05	1,64 E–05	1,73 E–05	2,04 E–05	1,55 E–05	1,74 E–05	1,67 E–05	2,07 E–05	2,25 E–05	3,04 E–05	1,08 E–05
35 890	2,80 E–03	9,88 E–04	7,69 E–04	9,15 E–05	5,07 E–05	2,24 E–05	1,76 E–05	1,54 E–05	1,62 E–05	1,71 E–05	2,02 E–05	1,54 E–05	1,73 E–05	1,65 E–05	2,04 E–05	2,20 E–05	2,96 E–05	1,08 E–05
35 900	2,25 E–03	7,96 E–04	6,20 E–04	7,64 E–05	4,43 E–05	1,98 E–05	1,59 E–05	1,41 E–05	1,50 E–05	1,60 E–05	1,88 E–05	1,47 E–05	1,68 E–05	1,61 E–05	2,01 E–05	2,18 E–05	2,93 E–05	1,03 E–05
36 000	2,11 E–03	7,51 E–04	5,86 E–04	7,41 E–05	4,48 E–05	1,94 E–05	1,57 E–05	1,40 E–05	1,49 E–05	1,59 E–05	1,87 E–05	1,49 E–05	1,71 E–05	1,64 E–05	2,02 E–05	2,19 E–05	2,95 E–05	1,07 E–05
36 100	1,96 E–03	6,98 E–04	5,45 E–04	6,88 E–05	4,13 E–05	1,84 E–05	1,49 E–05	1,34 E–05	1,42 E–05	1,52 E–05	1,79 E–05	1,43 E–05	1,64 E–05	1,57 E–05	1,95 E–05	2,13 E–05	2,87 E–05	1,01 E–05
36 200	1,45 E–03	5,23 E–04	4,09 E–04	5,62 E–05	3,75 E–05	1,61 E–05	1,34 E–05	1,23 E–05	1,32 E–05	1,43 E–05	1,68 E–05	1,38 E–05	1,62 E–05	1,55 E–05	1,93 E–05	2,10 E–05	2,83 E–05	1,00 E–05
36 300	1,19 E–03	4,35 E–04	3,42 E–04	4,98 E–05	3,54 E–05	1,50 E–05	1,27 E–05	1,18 E–05	1,26 E–05	1,38 E–05	1,62 E–05	1,36 E–05	1,60 E–05	1,54 E–05	1,91 E–05	2,08 E–05	2,81 E–05	9,93 E–06
36 400	9,44 E–04	3,50 E–04	2,77 E–04	4,38 E–05	3,38 E–05	1,37 E–05	1,18 E–05	1,11 E–05	1,19 E–05	1,31 E–05	1,54 E–05	1,31 E–05	1,57 E–05	1,50 E–05	1,85 E–05	2,01 E–05	2,72 E–05	9,77 E–06
36 500	5,39 E–04	2,10 E–04	1,68 E–04	3,23 E–05	2,85 E–05	1,13 E–05	1,01 E–05	9,70 E–06	1,04 E–05	1,16 E–05	1,36 E–05	1,20 E–05	1,45 E–05	1,39 E–05	1,72 E–05	1,87 E–05	2,54 E–05	9,04 E–06
37 000	3,04 E–04	1,26 E–04	1,02 E–04	2,35 E–05	2,27 E–05	9,06 E–06	8,19 E–06	8,00 E–06	8,64 E–06	9,68 E–06	1,14 E–05	1,01 E–05	1,23 E–05	1,17 E–05	1,45 E–05	1,59 E–05	2,17 E–05	7,64 E–06
38 000	1,87 E–04	8,29 E–05	6,76 E–05	1,78 E–05	1,81 E–05	7,23 E–06	6,59 E–06	6,47 E–06	6,99 E–06	7,86 E–06	9,29 E–06	8,25 E–06	1,01 E–05	9,47 E–06	1,17 E–05	1,30 E–05	1,79 E–05	6,29 E–06
39 000	1,24 E–04	5,84 E–05	4,79 E–05	1,39 E–05	1,46 E–05	5,86 E–06	5,36 E–06	5,28 E–06	5,70 E–06	6,43 E–06	7,63 E–06	6,75 E–06	8,25 E–06	7,66 E–06	9,45 E–06	1,06 E–05	1,45 E–05	5,07 E–06

Таблица 5.5 — Плотность потока КО размером от 0,10 до 0,25 см относительно ИСК

Высота, км	Плотность потока, $м^{-2} \cdot год^{-1}$																	
	2,5°	7,5°	12,5°	17,5°	22,5°	27,5°	32,5°	37,5°	42,5°	47,5°	52,5°	57,5°	62,5°	67,5°	72,5°	77,5°	82,5°	87,5°
200	1,32 E–02	1,32 E–02	1,38 E–02	1,38 E–02	1,44 E–02	1,40 E–02	1,35 E–02	1,38 E–02	1,53 E–02	1,74 E–02	1,96 E–02	1,79 E–02	2,21 E–02	2,34 E–02	3,22 E–02	3,58 E–02	5,29 E–02	1,35 E–02
300	2,74 E–02	2,74 E–02	2,88 E–02	2,88 E–02	3,00 E–02	2,92 E–02	2,80 E–02	2,87 E–02	3,18 E–02	3,62 E–02	4,07 E–02	3,71 E–02	4,59 E–02	4,87 E–02	6,69 E–02	7,45 E–02	1,10 E–01	2,81 E–02
400	5,54 E–02	5,54 E–02	5,82 E–02	5,82 E–02	6,06 E–02	5,89 E–02	5,67 E–02	5,80 E–02	6,43 E–02	7,31 E–02	8,24 E–02	7,51 E–02	9,28 E–02	9,85 E–02	1,35 E–01	1,51 E–01	2,22 E–01	5,68 E–02
500	8,01 E–02	8,01 E–02	8,42 E–02	8,42 E–02	8,76 E–02	8,52 E–02	8,20 E–02	8,39 E–02	9,30 E–02	1,06 E–01	1,19 E–01	1,09 E–01	1,34 E–01	1,43 E–01	1,96 E–01	2,18 E–01	3,21 E–01	8,21 E–02
600	9,15 E–02	9,15 E–02	9,62 E–02	9,62 E–02	1,00 E–01	9,74 E–02	9,37 E–02	9,59 E–02	1,06 E–01	1,21 E–01	1,36 E–01	1,24 E–01	1,53 E–01	1,63 E–01	2,24 E–01	2,49 E–01	3,67 E–01	9,39 E–02
700	1,16 E–01	1,16 E–01	1,22 E–01	1,22 E–01	1,27 E–01	1,23 E–01	1,19 E–01	1,21 E–01	1,35 E–01	1,53 E–01	1,72 E–01	1,57 E–01	1,94 E–01	2,06 E–01	2,83 E–01	3,15 E–01	4,65 E–01	1,19 E–01
800	1,06 E–01	1,06 E–01	1,10 E–01	1,10 E–01	1,14 E–01	1,14 E–01	1,12 E–01	1,17 E–01	1,29 E–01	1,44 E–01	1,60 E–01	1,70 E–01	2,13 E–01	2,24 E–01	2,87 E–01	3,80 E–01	5,17 E–01	1,28 E–01
900	7,23 E–02	7,23 E–02	7,42 E–02	7,42 E–02	7,71 E–02	7,75 E–02	7,73 E–02	8,12 E–02	8,91 E–02	9,89 E–02	1,09 E–01	1,22 E–01	1,54 E–01	1,61 E–01	2,03 E–01	2,82 E–01	3,75 E–01	9,18 E–02
1000	4,08 E–02	4,08 E–02	4,19 E–02	4,19 E–02	4,35 E–02	4,38 E–02	4,37 E–02	4,59 E–02	5,04 E–02	5,59 E–02	6,18 E–02	6,93 E–02	8,76 E–02	9,16 E–02	1,15 E–01	1,60 E–01	2,13 E–01	5,20 E–02
1100	2,38 E–02	2,38 E–02	2,45 E–02	2,45 E–02	2,54 E–02	2,55 E–02	2,55 E–02	2,67 E–02	2,93 E–02	3,26 E–02	3,60 E–02	4,02 E–02	5,07 E–02	5,30 E–02	6,68 E–02	9,26 E–02	1,23 E–01	3,01 E–02
1200	1,78 E–02	1,78 E–02	1,82 E–02	1,82 E–02	1,90 E–02	1,91 E–02	1,90 E–02	2,00 E–02	2,19 E–02	2,43 E–02	2,69 E–02	3,02 E–02	3,81 E–02	3,99 E–02	5,00 E–02	6,98 E–02	9,27 E–02	2,26 E–02
1300	1,80 E–02	1,80 E–02	1,84 E–02	1,84 E–02	1,89 E–02	1,88 E–02	1,91 E–02	2,02 E–02	2,23 E–02	2,51 E–02	2,80 E–02	3,03 E–02	3,76 E–02	4,07 E–02	5,68 E–02	5,92 E–02	6,22 E–02	1,30 E–02
1400	2,91 E–02	2,91 E–02	2,99 E–02	2,99 E–02	3,04 E–02	2,98 E–02	3,08 E–02	3,28 E–02	3,62 E–02	4,13 E–02	4,64 E–02	4,88 E–02	5,98 E–02	6,65 E–02	9,96 E–02	8,24 E–02	6,24 E–02	8,83 E–03
1500	1,60 E–02	1,60 E–02	1,64 E–02	1,64 E–02	1,67 E–02	1,64 E–02	1,69 E–02	1,80 E–02	1,99 E–02	2,27 E–02	2,55 E–02	2,67 E–02	3,28 E–02	3,64 E–02	5,44 E–02	4,53 E–02	3,50 E–02	5,14 E–03
1600	7,19 E–03	7,19 E–03	7,40 E–03	7,40 E–03	7,55 E–03	7,42 E–03	7,60 E–03	8,07 E–03	8,91 E–03	1,01 E–02	1,14 E–02	1,19 E–02	1,46 E–02	1,61 E–02	2,37 E–02	2,09 E–02	1,81 E–02	3,12 E–03
1700	4,24 E–03	4,24 E–03	4,37 E–03	4,37 E–03	4,46 E–03	4,39 E–03	4,48 E–03	4,74 E–03	5,23 E–03	5,94 E–03	6,67 E–03	6,96 E–03	8,57 E–03	9,41 E–03	1,37 E–02	1,25 E–02	1,16 E–02	2,16 E–03
1800	3,34 E–03	3,34 E–03	3,44 E–03	3,44 E–03	3,51 E–03	3,46 E–03	3,53 E–03	3,73 E–03	4,12 E–03	4,68 E–03	5,26 E–03	5,48 E–03	6,74 E–03	7,42 E–03	1,08 E–02	9,79 E–03	8,98 E–03	1,64 E–03

Продолжение таблицы 5.5

Высота, км	Плотность потока, $м^{-2} \cdot год^{-1}$																	
	2,5°	7,5°	12,5°	17,5°	22,5°	27,5°	32,5°	37,5°	42,5°	47,5°	52,5°	57,5°	62,5°	67,5°	72,5°	77,5°	82,5°	87,5°
1900	2,50 E–03	2,50 E–03	2,58 E–03	2,58 E–03	2,63 E–03	2,59 E–03	2,64 E–03	2,79 E–03	3,08 E–03	3,51 E–03	3,93 E–03	4,09 E–03	5,04 E–03	5,54 E–03	8,09 E–03	7,31 E–03	6,73 E–03	1,24 E–03
2000	4,29 E–04	3,90 E–04	4,29 E–04	3,90 E–04	4,18 E–04	3,61 E–04	3,55 E–04	3,69 E–04	4,07 E–04	4,61 E–04	5,18 E–04	5,11 E–04	6,33 E–04	6,77 E–04	9,35 E–04	9,95 E–04	1,26 E–03	3,06 E–04
4000	2,24 E–04	2,17 E–04	2,06 E–04	1,16 E–04	1,46 E–04	5,58 E–05	5,34 E–05	5,45 E–05	5,99 E–05	6,74 E–05	7,61 E–05	7,43 E–05	9,33 E–05	9,63 E–05	1,21 E–04	1,32 E–04	1,87 E–04	6,39 E–05
9000	7,51 E–05	7,05 E–05	6,49 E–05	3,50 E–05	4,33 E–05	1,70 E–05	1,61 E–05	1,63 E–05	1,78 E–05	2,00 E–05	2,26 E–05	2,18 E–05	2,74 E–05	2,82 E–05	3,54 E–05	3,90 E–05	5,57 E–05	1,89 E–05
18 000	6,71 E–05	6,02 E–05	5,42 E–05	3,12 E–05	3,66 E–05	1,71 E–05	1,65 E–05	1,71 E–05	1,85 E–05	2,11 E–05	2,49 E–05	2,65 E–05	3,79 E–05	1,91 E–05	2,21 E–05	2,42 E–05	3,44 E–05	1,23 E–05
19 000	2,78 E–04	1,98 E–04	1,63 E–04	1,32 E–04	1,30 E–04	1,08 E–04	1,08 E–04	1,17 E–04	1,25 E–04	1,45 E–04	1,80 E–04	2,11 E–04	3,36 E–04	3,94 E–05	2,36 E–05	2,57 E–05	3,64 E–05	1,32 E–05
19 100	3,11 E–04	2,19 E–04	1,79 E–04	1,47 E–04	1,44 E–04	1,22 E–04	1,23 E–04	1,32 E–04	1,42 E–04	1,65 E–04	2,05 E–04	2,41 E–04	3,84 E–04	4,21 E–05	2,31 E–05	2,52 E–05	3,57 E–05	1,30 E–05
19 200	1,76 E–04	1,32 E–04	1,10 E–04	8,32 E–05	8,48 E–05	6,39 E–05	6,40 E–05	6,86 E–05	7,37 E–05	8,54 E–05	1,05 E–04	1,22 E–04	1,93 E–04	2,91 E–05	2,21 E–05	2,40 E–05	3,41 E–05	1,24 E–05
19 300	1,04 E–04	8,41 E–05	7,30 E–05	4,87 E–05	5,29 E–05	3,28 E–05	3,25 E–05	3,45 E–05	3,72 E–05	4,28 E–05	5,21 E–05	5,91 E–05	9,08 E–05	2,19 E–05	2,12 E–05	2,30 E–05	3,27 E–05	1,20 E–05
19 400	7,30 E–05	6,32 E–05	5,63 E–05	3,41 E–05	3,89 E–05	2,01 E–05	1,97 E–05	2,07 E–05	2,23 E–05	2,55 E–05	3,06 E–05	3,37 E–05	5,01 E–05	1,82 E–05	1,97 E–05	2,14 E–05	3,03 E–05	1,11 E–05
19 600	6,64 E–05	5,89 E–05	5,29 E–05	3,10 E–05	3,60 E–05	1,73 E–05	1,69 E–05	1,76 E–05	1,90 E–05	2,17 E–05	2,59 E–05	2,81 E–05	4,12 E–05	1,72 E–05	1,91 E–05	2,08 E–05	2,94 E–05	1,09 E–05
19 800	7,71 E–05	6,59 E–05	5,84 E–05	3,60 E–05	4,07 E–05	2,19 E–05	2,15 E–05	2,26 E–05	2,44 E–05	2,80 E–05	3,37 E–05	3,74 E–05	5,63 E–05	1,82 E–05	1,91 E–05	2,07 E–05	2,93 E–05	1,09 E–05
20 000	8,73 E–05	6,96 E–05	6,11 E–05	3,66 E–05	4,10 E–05	2,12 E–05	2,05 E–05	2,12 E–05	2,34 E–05	2,77 E–05	3,68 E–05	2,86 E–05	3,61 E–05	1,64 E–05	1,85 E–05	2,01 E–05	2,84 E–05	1,06 E–05
20 100	8,40 E–05	6,68 E–05	5,88 E–05	3,40 E–05	3,85 E–05	1,86 E–05	1,79 E–05	1,83 E–05	2,04 E–05	2,44 E–05	3,34 E–05	2,18 E–05	2,38 E–05	1,54 E–05	1,82 E–05	1,97 E–05	2,79 E–05	1,04 E–05
20 200	6,59 E–05	5,60 E–05	5,02 E–05	2,79 E–05	3,27 E–05	1,41 E–05	1,34 E–05	1,37 E–05	1,52 E–05	1,78 E–05	2,34 E–05	1,71 E–05	1,97 E–05	1,46 E–05	1,74 E–05	1,89 E–05	2,66 E–05	1,00 E–05
20 300	5,96 E–05	5,22 E–05	4,72 E–05	2,57 E–05	3,06 E–05	1,25 E–05	1,19 E–05	1,21 E–05	1,33 E–05	1,55 E–05	1,99 E–05	1,54 E–05	1,81 E–05	1,42 E–05	1,71 E–05	1,85 E–05	2,61 E–05	9,83 E–06
20 400	7,84 E–05	6,27 E–05	5,55 E–05	3,14 E–05	3,59 E–05	1,66 E–05	1,58 E–05	1,60 E–05	1,80 E–05	2,16 E–05	2,99 E–05	1,81 E–05	1,81 E–05	1,43 E–05	1,72 E–05	1,86 E–05	2,63 E–05	9,95 E–06

Продолжение таблицы 5.5

Высота, км	Плотность потока, $м^{-2} \cdot год^{-1}$																	
	2,5°	7,5°	12,5°	17,5°	22,5°	27,5°	32,5°	37,5°	42,5°	47,5°	52,5°	57,5°	62,5°	67,5°	72,5°	77,5°	82,5°	87,5°
20 600	6,06 E–05	5,22 E–05	4,70 E–05	2,55 E–05	3,02 E–05	1,23 E–05	1,17 E–05	1,18 E–05	1,32 E–05	1,55 E–05	2,03 E–05	1,42 E–05	1,56 E–05	1,34 E–05	1,61 E–05	1,75 E–05	2,46 E–05	9,39 E–06
20 800	5,71 E–05	5,00 E–05	4,53 E–05	2,42 E–05	2,91 E–05	1,13 E–05	1,08 E–05	1,09 E–05	1,21 E–05	1,41 E–05	1,83 E–05	1,32 E–05	1,47 E–05	1,30 E–05	1,56 E–05	1,69 E–05	2,38 E–05	9,16 E–06
21 000	6,00 E–05	5,15 E–05	4,65 E–05	2,50 E–05	2,98 E–05	1,19 E–05	1,13 E–05	1,14 E–05	1,27 E–05	1,50 E–05	1,99 E–05	1,35 E–05	1,45 E–05	1,27 E–05	1,53 E–05	1,65 E–05	2,32 E–05	9,02 E–06
21 100	6,47 E–05	5,42 E–05	4,85 E–05	2,65 E–05	3,11 E–05	1,29 E–05	1,23 E–05	1,25 E–05	1,39 E–05	1,66 E–05	2,24 E–05	1,42 E–05	1,46 E–05	1,28 E–05	1,53 E–05	1,66 E–05	2,33 E–05	9,04 E–06
21 200	6,93 E–05	5,64 E–05	5,02 E–05	2,78 E–05	3,22 E–05	1,40 E–05	1,33 E–05	1,35 E–05	1,52 E–05	1,81 E–05	2,51 E–05	1,49 E–05	1,45 E–05	1,26 E–05	1,52 E–05	1,64 E–05	2,30 E–05	8,94 E–06
21 300	7,15 E–05	5,79 E–05	5,14 E–05	2,85 E–05	3,29 E–05	1,44 E–05	1,37 E–05	1,39 E–05	1,56 E–05	1,87 E–05	2,61 E–05	1,52 E–05	1,46 E–05	1,26 E–05	1,51 E–05	1,64 E–05	2,30 E–05	8,98 E–06
21 400	9,39 E–05	6,99 E–05	6,07 E–05	3,53 E–05	3,90 E–05	1,95 E–05	1,86 E–05	1,89 E–05	2,15 E–05	2,63 E–05	3,85 E–05	1,89 E–05	1,54 E–05	1,26 E–05	1,52 E–05	1,64 E–05	2,30 E–05	8,97 E–06
21 600	6,42 E–05	5,31 E–05	4,75 E–05	2,59 E–05	3,03 E–05	1,26 E–05	1,19 E–05	1,21 E–05	1,36 E–05	1,62 E–05	2,22 E–05	1,35 E–05	1,34 E–05	1,18 E–05	1,41 E–05	1,52 E–05	2,13 E–05	8,45 E–06
21 800	5,65 E–05	4,85 E–05	4,39 E–05	2,34 E–05	2,78 E–05	1,08 E–05	1,02 E–05	1,03 E–05	1,15 E–05	1,36 E–05	1,82 E–05	1,20 E–05	1,27 E–05	1,14 E–05	1,36 E–05	1,47 E–05	2,05 E–05	8,18 E–06
22 000	6,30 E–05	5,22 E–05	4,68 E–05	2,54 E–05	2,97 E–05	1,22 E–05	1,16 E–05	1,17 E–05	1,32 E–05	1,57 E–05	2,17 E–05	1,30 E–05	1,28 E–05	1,13 E–05	1,35 E–05	1,45 E–05	2,03 E–05	8,16 E–06
22 200	5,26 E–05	4,59 E–05	4,16 E–05	2,20 E–05	2,64 E–05	9,88 E–06	9,37 E–06	9,47 E–06	1,05 E–05	1,24 E–05	1,64 E–05	1,12 E–05	1,19 E–05	1,09 E–05	1,29 E–05	1,40 E–05	1,95 E–05	7,83 E–06
22 400	4,87 E–05	4,34 E–05	3,95 E–05	2,06 E–05	2,50 E–05	9,04 E–06	8,56 E–06	8,64 E–06	9,57 E–06	1,12 E–05	1,45 E–05	1,04 E–05	1,15 E–05	1,06 E–05	1,26 E–05	1,37 E–05	1,91 E–05	7,64 E–06
22 600	4,54 E–05	4,12 E–05	3,77 E–05	1,94 E–05	2,38 E–05	8,32 E–06	7,87 E–06	7,94 E–06	8,76 E–06	1,02 E–05	1,29 E–05	9,84 E–06	1,12 E–05	1,04 E–05	1,24 E–05	1,35 E–05	1,88 E–05	7,50 E–06
22 800	4,39 E–05	4,02 E–05	3,69 E–05	1,89 E–05	2,32 E–05	7,96 E–06	7,52 E–06	7,59 E–06	8,36 E–06	9,67 E–06	1,22 E–05	9,48 E–06	1,09 E–05	1,02 E–05	1,21 E–05	1,32 E–05	1,83 E–05	7,36 E–06
23 000	4,58 E–05	4,13 E–05	3,77 E–05	1,95 E–05	2,37 E–05	8,37 E–06	7,92 E–06	7,99 E–06	8,83 E–06	1,03 E–05	1,32 E–05	9,74 E–06	1,09 E–05	1,01 E–05	1,20 E–05	1,30 E–05	1,81 E–05	7,31 E–06
23 200	7,29 E–05	5,67 E–05	4,99 E–05	2,80 E–05	3,17 E–05	1,45 E–05	1,38 E–05	1,40 E–05	1,58 E–05	1,92 E–05	2,78 E–05	1,44 E–05	1,23 E–05	1,06 E–05	1,26 E–05	1,36 E–05	1,89 E–05	7,66 E–06
23 400	5,96 E–05	4,88 E–05	4,35 E–05	2,37 E–05	2,76 E–05	1,15 E–05	1,10 E–05	1,11 E–05	1,25 E–05	1,50 E–05	2,09 E–05	1,21 E–05	1,14 E–05	1,02 E–05	1,22 E–05	1,32 E–05	1,83 E–05	7,36 E–06

Продолжение таблицы 5.5

Высота, км	Плотность потока, $м^{-2} \cdot год^{-1}$																	
	2,5°	7,5°	12,5°	17,5°	22,5°	27,5°	32,5°	37,5°	42,5°	47,5°	52,5°	57,5°	62,5°	67,5°	72,5°	77,5°	82,5°	87,5°
23 500	5,55 E–05	4,62 E–05	4,13 E–05	2,23 E–05	2,61 E–05	1,07 E–05	1,01 E–05	1,02 E–05	1,15 E–05	1,37 E–05	1,89 E–05	1,14 E–05	1,11 E–05	1,01 E–05	1,20 E–05	1,30 E–05	1,81 E–05	7,23 E–06
23 600	5,05 E–05	4,34 E–05	3,92 E–05	2,07 E–05	2,47 E–05	9,47 E–06	8,98 E–06	9,07 E–06	1,01 E–05	1,20 E–05	1,61 E–05	1,04 E–05	1,07 E–05	9,84 E–06	1,17 E–05	1,27 E–05	1,76 E–05	7,10 E–06
23 700	4,93 E–05	4,26 E–05	3,85 E–05	2,03 E–05	2,43 E–05	9,19 E–06	8,71 E–06	8,79 E–06	9,80 E–06	1,16 E–05	1,55 E–05	1,02 E–05	1,05 E–05	9,71 E–06	1,15 E–05	1,25 E–05	1,73 E–05	7,01 E–06
23 800	4,77 E–05	4,15 E–05	3,76 E–05	1,97 E–05	2,37 E–05	8,85 E–06	8,38 E–06	8,46 E–06	9,42 E–06	1,11 E–05	1,48 E–05	9,86 E–06	1,03 E–05	9,59 E–06	1,14 E–05	1,23 E–05	1,71 E–05	6,92 E–06
24 000	7,61 E–05	4,42 E–05	3,84 E–05	1,41 E–05	1,66 E–05	5,23 E–06	4,86 E–06	4,85 E–06	5,26 E–06	5,93 E–06	6,95 E–06	6,40 E–06	7,90 E–06	7,68 E–06	9,20 E–06	9,86 E–06	1,35 E–05	5,43 E–06
30 000	7,17 E–05	3,84 E–05	3,28 E–05	1,09 E–05	1,25 E–05	4,09 E–06	3,79 E–06	3,77 E–06	4,08 E–06	4,58 E–06	5,33 E–06	4,99 E–06	6,19 E–06	6,02 E–06	7,32 E–06	7,70 E–06	1,03 E–05	4,04 E–06
31 000	8,29 E–05	4,12 E–05	3,47 E–05	1,06 E–05	1,18 E–05	3,95 E–06	3,64 E–06	3,62 E–06	3,91 E–06	4,39 E–06	5,10 E–06	4,76 E–06	5,90 E–06	5,71 E–06	6,98 E–06	7,34 E–06	9,79 E–06	3,79 E–06
32 000	8,10 E–05	3,92 E–05	3,28 E–05	9,68 E–06	1,06 E–05	3,66 E–06	3,37 E–06	3,34 E–06	3,61 E–06	4,05 E–06	4,72 E–06	4,38 E–06	5,42 E–06	5,23 E–06	6,41 E–06	6,78 E–06	9,06 E–06	3,45 E–06
33 000	1,09 E–04	4,77 E–05	3,91 E–05	9,82 E–06	1,01 E–05	3,61 E–06	3,28 E–06	3,23 E–06	3,49 E–06	3,90 E–06	4,55 E–06	4,16 E–06	5,13 E–06	4,94 E–06	6,07 E–06	6,45 E–06	8,66 E–06	3,25 E–06
34 000	1,25 E–04	5,16 E–05	4,17 E–05	9,29 E–06	8,93 E–06	3,44 E–06	3,11 E–06	3,04 E–06	3,29 E–06	3,67 E–06	4,29 E–06	3,87 E–06	4,73 E–06	4,57 E–06	5,67 E–06	6,10 E–06	8,20 E–06	2,94 E–06
35 000	1,61 E–04	6,39 E–05	5,12 E–05	1,00 E–05	9,02 E–06	3,45 E–06	3,07 E–06	2,96 E–06	3,19 E–06	3,54 E–06	4,15 E–06	3,68 E–06	4,48 E–06	4,30 E–06	5,31 E–06	5,72 E–06	7,70 E–06	2,81 E–06
35 500	2,26 E–04	8,56 E–05	6,77 E–05	1,13 E–05	9,01 E–06	3,66 E–06	3,17 E–06	3,01 E–06	3,24 E–06	3,57 E–06	4,18 E–06	3,62 E–06	4,34 E–06	4,18 E–06	5,18 E–06	5,61 E–06	7,56 E–06	2,70 E–06
35 600	3,00 E–04	1,11 E–04	8,72 E–05	1,31 E–05	9,65 E–06	3,99 E–06	3,40 E–06	3,18 E–06	3,40 E–06	3,73 E–06	4,37 E–06	3,71 E–06	4,41 E–06	4,24 E–06	5,25 E–06	5,70 E–06	7,69 E–06	2,75 E–06
35 700	3,86 E–04	1,40 E–04	1,10 E–04	1,52 E–05	1,03 E–05	4,31 E–06	3,59 E–06	3,30 E–06	3,52 E–06	3,81 E–06	4,47 E–06	3,70 E–06	4,34 E–06	4,17 E–06	5,15 E–06	5,57 E–06	7,52 E–06	2,72 E–06
35 710	4,32 E–04	1,56 E–04	1,22 E–04	1,65 E–05	1,08 E–05	4,55 E–06	3,76 E–06	3,43 E–06	3,66 E–06	3,95 E–06	4,64 E–06	3,80 E–06	4,44 E–06	4,27 E–06	5,28 E–06	5,69 E–06	7,64 E–06	2,78 E–06
35 720	4,66 E–04	1,67 E–04	1,31 E–04	1,71 E–05	1,08 E–05	4,64 E–06	3,80 E–06	3,44 E–06	3,66 E–06	3,94 E–06	4,62 E–06	3,74 E–06	4,33 E–06	4,16 E–06	5,14 E–06	5,58 E–06	7,54 E–06	2,71 E–06
35 730	5,27 E–04	1,89 E–04	1,47 E–04	1,87 E–05	1,14 E–05	4,94 E–06	4,00 E–06	3,59 E–06	3,81 E–06	4,07 E–06	4,78 E–06	3,82 E–06	4,39 E–06	4,22 E–06	5,23 E–06	5,66 E–06	7,60 E–06	2,73 E–06

Продолжение таблицы 5.5

Высота, км	Плотность потока, $м^{-2} \cdot год^{-1}$																	
	2,5°	7,5°	12,5°	17,5°	22,5°	27,5°	32,5°	37,5°	42,5°	47,5°	52,5°	57,5°	62,5°	67,5°	72,5°	77,5°	82,5°	87,5°
35 740	6,98 E–04	2,47 E–04	1,92 E–04	2,28 E–05	1,25 E–05	5,62 E–06	4,42 E–06	3,87 E–06	4,08 E–06	4,31 E–06	5,06 E–06	3,87 E–06	4,35 E–06	4,17 E–06	5,16 E–06	5,58 E–06	7,50 E–06	2,70 E–06
35 750	9,19 E–04	3,23 E–04	2,51 E–04	2,84 E–05	1,45 E–05	6,64 E–06	5,09 E–06	4,36 E–06	4,58 E–06	4,78 E–06	5,61 E–06	4,11 E–06	4,50 E–06	4,32 E–06	5,34 E–06	5,78 E–06	7,82 E–06	2,82 E–06
35 760	1,57 E–03	5,44 E–04	4,22 E–04	4,42 E–05	1,92 E–05	9,30 E–06	6,78 E–06	5,50 E–06	5,72 E–06	5,76 E–06	6,79 E–06	4,41 E–06	4,45 E–06	4,27 E–06	5,27 E–06	5,68 E–06	7,64 E–06	2,78 E–06
35 770	3,14 E–03	1,08 E–03	8,36 E–04	8,22 E–05	3,04 E–05	1,58 E–05	1,09 E–05	8,34 E–06	8,53 E–06	8,23 E–06	9,70 E–06	5,20 E–06	4,39 E–06	4,22 E–06	5,23 E–06	5,67 E–06	7,65 E–06	2,73 E–06
35 780	3,28 E–03	1,13 E–03	8,73 E–04	8,59 E–05	3,17 E–05	1,65 E–05	1,13 E–05	8,65 E–06	8,85 E–06	8,52 E–06	1,00 E–05	5,35 E–06	4,50 E–06	4,32 E–06	5,33 E–06	5,78 E–06	7,82 E–06	2,82 E–06
35 790	2,47 E–03	8,53 E–04	6,60 E–04	6,59 E–05	2,54 E–05	1,30 E–05	9,13 E–06	7,11 E–06	7,31 E–06	7,16 E–06	8,43 E–06	4,84 E–06	4,38 E–06	4,21 E–06	5,23 E–06	5,67 E–06	7,63 E–06	2,71 E–06
35 800	1,88 E–03	6,50 E–04	5,03 E–04	5,17 E–05	2,13 E–05	1,06 E–05	7,59 E–06	6,06 E–06	6,27 E–06	6,25 E–06	7,35 E–06	4,56 E–06	4,43 E–06	4,25 E–06	5,26 E–06	5,69 E–06	7,69 E–06	2,77 E–06
35 810	1,59 E–03	5,53 E–04	4,29 E–04	4,49 E–05	1,95 E–05	9,44 E–06	6,87 E–06	5,58 E–06	5,79 E–06	5,83 E–06	6,87 E–06	4,46 E–06	4,49 E–06	4,31 E–06	5,31 E–06	5,75 E–06	7,78 E–06	2,83 E–06
35 820	1,34 E–03	4,65 E–04	3,60 E–04	3,83 E–05	1,71 E–05	8,29 E–06	6,12 E–06	5,04 E–06	5,25 E–06	5,34 E–06	6,28 E–06	4,22 E–06	4,36 E–06	4,18 E–06	5,18 E–06	5,60 E–06	7,54 E–06	2,69 E–06
35 830	1,16 E–03	4,04 E–04	3,14 E–04	3,42 E–05	1,62 E–05	7,59 E–06	5,69 E–06	4,76 E–06	4,97 E–06	5,10 E–06	6,00 E–06	4,19 E–06	4,45 E–06	4,27 E–06	5,26 E–06	5,68 E–06	7,64 E–06	2,79 E–06
35 840	1,03 E–03	3,59 E–04	2,79 E–04	3,10 E–05	1,52 E–05	7,02 E–06	5,32 E–06	4,49 E–06	4,71 E–06	4,86 E–06	5,72 E–06	4,09 E–06	4,40 E–06	4,22 E–06	5,19 E–06	5,63 E–06	7,60 E–06	2,78 E–06
35 850	9,03 E–04	3,16 E–04	2,46 E–04	2,78 E–05	1,41 E–05	6,51 E–06	5,00 E–06	4,28 E–06	4,50 E–06	4,69 E–06	5,51 E–06	4,04 E–06	4,42 E–06	4,25 E–06	5,26 E–06	5,71 E–06	7,72 E–06	2,76 E–06
35 860	8,24 E–04	2,89 E–04	2,25 E–04	2,58 E–05	1,35 E–05	6,15 E–06	4,76 E–06	4,11 E–06	4,32 E–06	4,53 E–06	5,32 E–06	3,95 E–06	4,37 E–06	4,20 E–06	5,19 E–06	5,63 E–06	7,62 E–06	2,74 E–06
35 870	7,44 E–04	2,63 E–04	2,04 E–04	2,43 E–05	1,35 E–05	5,93 E–06	4,66 E–06	4,07 E–06	4,30 E–06	4,53 E–06	5,32 E–06	4,06 E–06	4,57 E–06	4,39 E–06	5,39 E–06	5,83 E–06	7,87 E–06	2,89 E–06
35 880	7,07 E–04	2,49 E–04	1,94 E–04	2,28 E–05	1,24 E–05	5,64 E–06	4,43 E–06	3,87 E–06	4,09 E–06	4,32 E–06	5,07 E–06	3,86 E–06	4,33 E–06	4,15 E–06	5,16 E–06	5,61 E–06	7,57 E–06	2,68 E–06
35 890	6,98 E–04	2,46 E–04	1,92 E–04	2,28 E–05	1,26 E–05	5,58 E–06	4,38 E–06	3,83 E–06	4,04 E–06	4,27 E–06	5,02 E–06	3,83 E–06	4,30 E–06	4,12 E–06	5,07 E–06	5,47 E–06	7,36 E–06	2,69 E–06
35 900	5,59 E–04	1,98 E–04	1,54 E–04	1,90 E–05	1,10 E–05	4,93 E–06	3,96 E–06	3,52 E–06	3,73 E–06	3,98 E–06	4,68 E–06	3,67 E–06	4,19 E–06	4,02 E–06	5,00 E–06	5,43 E–06	7,30 E–06	2,58 E–06

Окончание таблицы 5.5

Высота, км	Плотность потока, $м^{-2} \cdot год^{-1}$																	
	2,5°	7,5°	12,5°	17,5°	22,5°	27,5°	32,5°	37,5°	42,5°	47,5°	52,5°	57,5°	62,5°	67,5°	72,5°	77,5°	82,5°	87,5°
36 000	5,25 E–04	1,87 E–04	1,46 E–04	1,84 E–05	1,11 E–05	4,83 E–06	3,90 E–06	3,49 E–06	3,71 E–06	3,97 E–06	4,66 E–06	3,70 E–06	4,25 E–06	4,07 E–06	5,03 E–06	5,44 E–06	7,34 E–06	2,65 E–06
36 100	4,89 E–04	1,74 E–04	1,36 E–04	1,71 E–05	1,03 E–05	4,58 E–06	3,71 E–06	3,33 E–06	3,54 E–06	3,79 E–06	4,46 E–06	3,55 E–06	4,08 E–06	3,91 E–06	4,87 E–06	5,30 E–06	7,13 E–06	2,50 E–06
36 200	3,61 E–04	1,30 E–04	1,02 E–04	1,40 E–05	9,34 E–06	4,02 E–06	3,35 E–06	3,07 E–06	3,28 E–06	3,56 E–06	4,18 E–06	3,44 E–06	4,03 E–06	3,87 E–06	4,80 E–06	5,23 E–06	7,05 E–06	2,49 E–06
36 300	2,97 E–04	1,08 E–04	8,51 E–05	1,24 E–05	8,81 E–06	3,73 E–06	3,15 E–06	2,93 E–06	3,14 E–06	3,43 E–06	4,02 E–06	3,37 E–06	3,99 E–06	3,82 E–06	4,75 E–06	5,17 E–06	7,00 E–06	2,47 E–06
36 400	2,35 E–04	8,72 E–05	6,88 E–05	1,09 E–05	8,40 E–06	3,42 E–06	2,94 E–06	2,77 E–06	2,96 E–06	3,26 E–06	3,83 E–06	3,27 E–06	3,91 E–06	3,74 E–06	4,62 E–06	5,01 E–06	6,77 E–06	2,43 E–06
36 500	1,34 E–04	5,23 E–05	4,17 E–05	8,03 E–06	7,09 E–06	2,82 E–06	2,50 E–06	2,41 E–06	2,60 E–06	2,89 E–06	3,40 E–06	2,99 E–06	3,62 E–06	3,46 E–06	4,27 E–06	4,67 E–06	6,32 E–06	2,25 E–06
37 000	7,56 E–05	3,14 E–05	2,54 E–05	5,85 E–06	5,65 E–06	2,26 E–06	2,04 E–06	1,99 E–06	2,15 E–06	2,41 E–06	2,84 E–06	2,52 E–06	3,07 E–06	2,91 E–06	3,60 E–06	3,97 E–06	5,41 E–06	1,90 E–06
38 000	4,65 E–05	2,06 E–05	1,68 E–05	4,43 E–06	4,52 E–06	1,80 E–06	1,64 E–06	1,61 E–06	1,74 E–06	1,96 E–06	2,31 E–06	2,05 E–06	2,51 E–06	2,36 E–06	2,91 E–06	3,24 E–06	4,46 E–06	1,57 E–06
39 000	3,09 E–05	1,45 E–05	1,19 E–05	3,46 E–06	3,63 E–06	1,46 E–06	1,34 E–06	1,31 E–06	1,42 E–06	1,60 E–06	1,90 E–06	1,68 E–06	2,05 E–06	1,91 E–06	2,35 E–06	2,63 E–06	3,62 E–06	1,26 E–06

Таблица 5.6 — Плотность потока КО размером от 0,25 до 0,50 см относительно ИСК

Высота, км	Плотность потока, $м^{-2} \cdot год^{-1}$																	
	2,5°	7,5°	12,5°	17,5°	22,5°	27,5°	32,5°	37,5°	42,5°	47,5°	52,5°	57,5°	62,5°	67,5°	72,5°	77,5°	82,5°	87,5°
200	1,03 E–03	1,03 E–03	1,08 E–03	1,08 E–03	1,12 E–03	1,09 E–03	1,05 E–03	1,08 E–03	1,19 E–03	1,36 E–03	1,53 E–03	1,39 E–03	1,72 E–03	1,83 E–03	2,51 E–03	2,79 E–03	4,12 E–03	1,05 E–03
300	2,13 E–03	2,13 E–03	2,24 E–03	2,24 E–03	2,34 E–03	2,27 E–03	2,18 E–03	2,24 E–03	2,48 E–03	2,82 E–03	3,17 E–03	2,89 E–03	3,58 E–03	3,80 E–03	5,21 E–03	5,80 E–03	8,57 E–03	2,19 E–03
400	4,31 E–03	4,31 E–03	4,53 E–03	4,53 E–03	4,72 E–03	4,59 E–03	4,42 E–03	4,52 E–03	5,01 E–03	5,70 E–03	6,42 E–03	5,85 E–03	7,23 E–03	7,68 E–03	1,05 E–02	1,17 E–02	1,73 E–02	4,42 E–03
500	6,24 E–03	6,24 E–03	6,56 E–03	6,56 E–03	6,83 E–03	6,64 E–03	6,39 E–03	6,54 E–03	7,25 E–03	8,24 E–03	9,28 E–03	8,46 E–03	1,05 E–02	1,11 E–02	1,52 E–02	1,70 E–02	2,51 E–02	6,40 E–03
600	7,13 E–03	7,13 E–03	7,50 E–03	7,50 E–03	7,80 E–03	7,59 E–03	7,30 E–03	7,47 E–03	8,29 E–03	9,42 E–03	1,06 E–02	9,67 E–03	1,20 E–02	1,27 E–02	1,74 E–02	1,94 E–02	2,86 E–02	7,31 E–03

Продолжение таблицы 5.6

Высота, км	Плотность потока, $м^{-2} \cdot год^{-1}$																	
	2,5°	7,5°	12,5°	17,5°	22,5°	27,5°	32,5°	37,5°	42,5°	47,5°	52,5°	57,5°	62,5°	67,5°	72,5°	77,5°	82,5°	87,5°
700	9,03 E–03	9,03 E–03	9,49 E–03	9,49 E–03	9,88 E–03	9,61 E–03	9,24 E–03	9,46 E–03	1,05 E–02	1,19 E–02	1,34 E–02	1,22 E–02	1,51 E–02	1,61 E–02	2,21 E–02	2,46 E–02	3,62 E–02	9,26 E–03
800	8,27 E–03	8,27 E–03	8,54 E–03	8,54 E–03	8,88 E–03	8,85 E–03	8,73 E–03	9,12 E–03	1,00 E–02	1,12 E–02	1,25 E–02	1,32 E–02	1,66 E–02	1,74 E–02	2,24 E–02	2,96 E–02	4,03 E–02	9,94 E–03
900	5,63 E–03	5,63 E–03	5,78 E–03	5,78 E–03	6,01 E–03	6,04 E–03	6,02 E–03	6,33 E–03	6,94 E–03	7,70 E–03	8,52 E–03	9,53 E–03	1,20 E–02	1,26 E–02	1,58 E–02	2,20 E–02	2,92 E–02	7,15 E–03
1000	3,18 E–03	3,18 E–03	3,26 E–03	3,26 E–03	3,39 E–03	3,41 E–03	3,41 E–03	3,58 E–03	3,93 E–03	4,36 E–03	4,82 E–03	5,40 E–03	6,82 E–03	7,13 E–03	8,96 E–03	1,25 E–02	1,66 E–02	4,05 E–03
1100	1,86 E–03	1,86 E–03	1,91 E–03	1,91 E–03	1,98 E–03	1,99 E–03	1,98 E–03	2,08 E–03	2,29 E–03	2,54 E–03	2,81 E–03	3,13 E–03	3,95 E–03	4,13 E–03	5,20 E–03	7,21 E–03	9,60 E–03	2,35 E–03
1200	1,39 E–03	1,39 E–03	1,42 E–03	1,42 E–03	1,48 E–03	1,49 E–03	1,48 E–03	1,56 E–03	1,71 E–03	1,90 E–03	2,10 E–03	2,35 E–03	2,97 E–03	3,11 E–03	3,90 E–03	5,44 E–03	7,22 E–03	1,76 E–03
1300	1,40 E–03	1,40 E–03	1,44 E–03	1,44 E–03	1,48 E–03	1,46 E–03	1,49 E–03	1,58 E–03	1,74 E–03	1,96 E–03	2,18 E–03	2,36 E–03	2,93 E–03	3,17 E–03	4,42 E–03	4,62 E–03	4,85 E–03	1,01 E–03
1400	2,27 E–03	2,27 E–03	2,33 E–03	2,33 E–03	2,37 E–03	2,32 E–03	2,40 E–03	2,56 E–03	2,82 E–03	3,22 E–03	3,62 E–03	3,80 E–03	4,66 E–03	5,18 E–03	7,76 E–03	6,42 E–03	4,86 E–03	6,88 E–04
1500	1,25 E–03	1,25 E–03	1,28 E–03	1,28 E–03	1,30 E–03	1,28 E–03	1,32 E–03	1,40 E–03	1,55 E–03	1,77 E–03	1,99 E–03	2,08 E–03	2,55 E–03	2,84 E–03	4,24 E–03	3,53 E–03	2,73 E–03	4,00 E–04
1600	5,60 E–04	5,60 E–04	5,76 E–04	5,76 E–04	5,88 E–04	5,78 E–04	5,92 E–04	6,29 E–04	6,94 E–04	7,89 E–04	8,86 E–04	9,27 E–04	1,14 E–03	1,26 E–03	1,85 E–03	1,63 E–03	1,41 E–03	2,43 E–04
1700	3,30 E–04	3,30 E–04	3,40 E–04	3,40 E–04	3,48 E–04	3,42 E–04	3,49 E–04	3,69 E–04	4,08 E–04	4,63 E–04	5,20 E–04	5,42 E–04	6,68 E–04	7,33 E–04	1,07 E–03	9,74 E–04	9,06 E–04	1,68 E–04
1800	2,60 E–04	2,60 E–04	2,68 E–04	2,68 E–04	2,74 E–04	2,69 E–04	2,75 E–04	2,91 E–04	3,21 E–04	3,65 E–04	4,10 E–04	4,27 E–04	5,25 E–04	5,78 E–04	8,44 E–04	7,63 E–04	7,00 E–04	1,28 E–04
1900	1,95 E–04	1,95 E–04	2,01 E–04	2,01 E–04	2,05 E–04	2,02 E–04	2,06 E–04	2,18 E–04	2,40 E–04	2,73 E–04	3,07 E–04	3,19 E–04	3,92 E–04	4,32 E–04	6,30 E–04	5,69 E–04	5,25 E–04	9,63 E–05
2000	3,34 E–05	3,04 E–05	3,34 E–05	3,04 E–05	3,26 E–05	2,81 E–05	2,77 E–05	2,87 E–05	3,17 E–05	3,60 E–05	4,04 E–05	3,98 E–05	4,93 E–05	5,28 E–05	7,28 E–05	7,75 E–05	9,80 E–05	2,39 E–05
4000	1,75 E–05	1,69 E–05	1,61 E–05	9,04 E–06	1,13 E–05	4,35 E–06	4,16 E–06	4,25 E–06	4,66 E–06	5,25 E–06	5,93 E–06	5,79 E–06	7,27 E–06	7,51 E–06	9,42 E–06	1,03 E–05	1,45 E–05	4,98 E–06
9000	5,85 E–06	5,50 E–06	5,06 E–06	2,73 E–06	3,37 E–06	1,33 E–06	1,26 E–06	1,27 E–06	1,39 E–06	1,56 E–06	1,76 E–06	1,70 E–06	2,14 E–06	2,20 E–06	2,76 E–06	3,04 E–06	4,34 E–06	1,47 E–06
18 000	5,23 E–06	4,69 E–06	4,22 E–06	2,43 E–06	2,85 E–06	1,33 E–06	1,29 E–06	1,34 E–06	1,44 E–06	1,65 E–06	1,94 E–06	2,07 E–06	2,95 E–06	1,49 E–06	1,73 E–06	1,88 E–06	2,68 E–06	9,56 E–07

Продолжение таблицы 5.6

Высота, км	Плотность потока, $м^{-2} \cdot год^{-1}$																	
	2,5°	7,5°	12,5°	17,5°	22,5°	27,5°	32,5°	37,5°	42,5°	47,5°	52,5°	57,5°	62,5°	67,5°	72,5°	77,5°	82,5°	87,5°
19 000	2,17 E–05	1,54 E–05	1,27 E–05	1,03 E–05	1,01 E–05	8,39 E–06	8,43 E–06	9,08 E–06	9,76 E–06	1,13 E–05	1,40 E–05	1,65 E–05	2,62 E–05	3,07 E–06	1,84 E–06	2,00 E–06	2,84 E–06	1,03 E–06
19 100	2,42 E–05	1,71 E–05	1,39 E–05	1,15 E–05	1,12 E–05	9,51 E–06	9,57 E–06	1,03 E–05	1,11 E–05	1,29 E–05	1,60 E–05	1,88 E–05	2,99 E–05	3,28 E–06	1,80 E–06	1,96 E–06	2,78 E–06	1,01 E–06
19 200	1,37 E–05	1,03 E–05	8,60 E–06	6,49 E–06	6,61 E–06	4,98 E–06	4,98 E–06	5,34 E–06	5,75 E–06	6,65 E–06	8,21 E–06	9,53 E–06	1,50 E–05	2,27 E–06	1,72 E–06	1,87 E–06	2,65 E–06	9,69 E–07
19 300	8,08 E–06	6,56 E–06	5,69 E–06	3,80 E–06	4,12 E–06	2,56 E–06	2,53 E–06	2,69 E–06	2,90 E–06	3,34 E–06	4,06 E–06	4,60 E–06	7,07 E–06	1,71 E–06	1,65 E–06	1,79 E–06	2,55 E–06	9,31 E–07
19 400	5,69 E–06	4,92 E–06	4,38 E–06	2,66 E–06	3,03 E–06	1,57 E–06	1,53 E–06	1,61 E–06	1,74 E–06	1,99 E–06	2,38 E–06	2,63 E–06	3,90 E–06	1,42 E–06	1,53 E–06	1,67 E–06	2,36 E–06	8,66 E–07
19 600	5,17 E–06	4,59 E–06	4,12 E–06	2,41 E–06	2,81 E–06	1,35 E–06	1,31 E–06	1,37 E–06	1,48 E–06	1,69 E–06	2,01 E–06	2,19 E–06	3,21 E–06	1,34 E–06	1,49 E–06	1,62 E–06	2,29 E–06	8,47 E–07
19 800	6,01 E–06	5,14 E–06	4,55 E–06	2,81 E–06	3,17 E–06	1,70 E–06	1,67 E–06	1,76 E–06	1,90 E–06	2,18 E–06	2,62 E–06	2,92 E–06	4,38 E–06	1,42 E–06	1,49 E–06	1,61 E–06	2,28 E–06	8,47 E–07
20 000	6,80 E–06	5,43 E–06	4,76 E–06	2,85 E–06	3,19 E–06	1,65 E–06	1,60 E–06	1,65 E–06	1,83 E–06	2,16 E–06	2,87 E–06	2,23 E–06	2,81 E–06	1,28 E–06	1,44 E–06	1,57 E–06	2,22 E–06	8,27 E–07
20 100	6,55 E–06	5,20 E–06	4,58 E–06	2,65 E–06	3,00 E–06	1,45 E–06	1,39 E–06	1,42 E–06	1,59 E–06	1,90 E–06	2,60 E–06	1,70 E–06	1,86 E–06	1,20 E–06	1,42 E–06	1,54 E–06	2,17 E–06	8,14 E–07
20 200	5,13 E–06	4,36 E–06	3,92 E–06	2,17 E–06	2,55 E–06	1,10 E–06	1,05 E–06	1,07 E–06	1,18 E–06	1,39 E–06	1,82 E–06	1,33 E–06	1,54 E–06	1,13 E–06	1,36 E–06	1,47 E–06	2,08 E–06	7,81 E–07
20 300	4,65 E–06	4,07 E–06	3,68 E–06	2,00 E–06	2,39 E–06	9,71 E–07	9,25 E–07	9,41 E–07	1,04 E–06	1,21 E–06	1,55 E–06	1,20 E–06	1,41 E–06	1,11 E–06	1,33 E–06	1,44 E–06	2,03 E–06	7,66 E–07
20 400	6,11 E–06	4,89 E–06	4,32 E–06	2,45 E–06	2,80 E–06	1,29 E–06	1,23 E–06	1,25 E–06	1,41 E–06	1,68 E–06	2,33 E–06	1,41 E–06	1,41 E–06	1,11 E–06	1,34 E–06	1,45 E–06	2,05 E–06	7,75 E–07
20 600	4,72 E–06	4,06 E–06	3,66 E–06	1,99 E–06	2,36 E–06	9,57 E–07	9,09 E–07	9,22 E–07	1,02 E–06	1,20 E–06	1,58 E–06	1,11 E–06	1,22 E–06	1,04 E–06	1,26 E–06	1,36 E–06	1,92 E–06	7,32 E–07
20 800	4,45 E–06	3,90 E–06	3,53 E–06	1,89 E–06	2,27 E–06	8,82 E–07	8,38 E–07	8,48 E–07	9,41 E–07	1,10 E–06	1,43 E–06	1,03 E–06	1,15 E–06	1,01 E–06	1,22 E–06	1,32 E–06	1,85 E–06	7,14 E–07
21 000	4,67 E–06	4,02 E–06	3,62 E–06	1,95 E–06	2,32 E–06	9,25 E–07	8,79 E–07	8,90 E–07	9,91 E–07	1,17 E–06	1,55 E–06	1,05 E–06	1,13 E–06	9,92 E–07	1,19 E–06	1,29 E–06	1,81 E–06	7,03 E–07
21 100	5,04 E–06	4,22 E–06	3,78 E–06	2,06 E–06	2,42 E–06	1,01 E–06	9,59 E–07	9,70 E–07	1,09 E–06	1,29 E–06	1,75 E–06	1,11 E–06	1,13 E–06	9,94 E–07	1,19 E–06	1,29 E–06	1,81 E–06	7,04 E–07
21 200	5,40 E–06	4,40 E–06	3,91 E–06	2,17 E–06	2,51 E–06	1,09 E–06	1,04 E–06	1,05 E–06	1,18 E–06	1,41 E–06	1,96 E–06	1,16 E–06	1,13 E–06	9,83 E–07	1,18 E–06	1,28 E–06	1,79 E–06	6,97 E–07

Продолжение таблицы 5.6

Высота, км	Плотность потока, $м^{-2} \cdot год^{-1}$																	
	2,5°	7,5°	12,5°	17,5°	22,5°	27,5°	32,5°	37,5°	42,5°	47,5°	52,5°	57,5°	62,5°	67,5°	72,5°	77,5°	82,5°	87,5°
21 300	5,57 E–06	4,51 E–06	4,01 E–06	2,22 E–06	2,57 E–06	1,12 E–06	1,07 E–06	1,08 E–06	1,22 E–06	1,46 E–06	2,03 E–06	1,18 E–06	1,13 E–06	9,84 E–07	1,18 E–06	1,28 E–06	1,79 E–06	7,00 E–07
21 400	7,31 E–06	5,45 E–06	4,73 E–06	2,75 E–06	3,04 E–06	1,52 E–06	1,45 E–06	1,47 E–06	1,67 E–06	2,05 E–06	3,00 E–06	1,48 E–06	1,20 E–06	9,84 E–07	1,18 E–06	1,28 E–06	1,79 E–06	6,99 E–07
21 600	5,00 E–06	4,14 E–06	3,70 E–06	2,02 E–06	2,36 E–06	9,79 E–07	9,31 E–07	9,42 E–07	1,06 E–06	1,26 E–06	1,73 E–06	1,05 E–06	1,04 E–06	9,19 E–07	1,10 E–06	1,18 E–06	1,66 E–06	6,58 E–07
21 800	4,40 E–06	3,78 E–06	3,42 E–06	1,82 E–06	2,17 E–06	8,41 E–07	7,98 E–07	8,06 E–07	8,99 E–07	1,06 E–06	1,42 E–06	9,39 E–07	9,86 E–07	8,88 E–07	1,06 E–06	1,14 E–06	1,60 E–06	6,37 E–07
22 000	4,91 E–06	4,07 E–06	3,64 E–06	1,98 E–06	2,31 E–06	9,50 E–07	9,03 E–07	9,13 E–07	1,02 E–06	1,22 E–06	1,69 E–06	1,02 E–06	9,96 E–07	8,81 E–07	1,05 E–06	1,13 E–06	1,58 E–06	6,36 E–07
22 200	4,10 E–06	3,58 E–06	3,25 E–06	1,71 E–06	2,06 E–06	7,70 E–07	7,30 E–07	7,38 E–07	8,21 E–07	9,65 E–07	1,28 E–06	8,70 E–07	9,28 E–07	8,46 E–07	1,01 E–06	1,09 E–06	1,52 E–06	6,10 E–07
22 400	3,80 E–06	3,38 E–06	3,08 E–06	1,60 E–06	1,94 E–06	7,04 E–07	6,67 E–07	6,74 E–07	7,46 E–07	8,72 E–07	1,13 E–06	8,14 E–07	8,97 E–07	8,27 E–07	9,85 E–07	1,07 E–06	1,49 E–06	5,95 E–07
22 600	3,54 E–06	3,21 E–06	2,94 E–06	1,51 E–06	1,85 E–06	6,49 E–07	6,13 E–07	6,19 E–07	6,83 E–07	7,92 E–07	1,01 E–06	7,66 E–07	8,71 E–07	8,13 E–07	9,69 E–07	1,05 E–06	1,46 E–06	5,85 E–07
22 800	3,42 E–06	3,14 E–06	2,88 E–06	1,47 E–06	1,81 E–06	6,20 E–07	5,86 E–07	5,91 E–07	6,51 E–07	7,54 E–07	9,50 E–07	7,39 E–07	8,48 E–07	7,95 E–07	9,46 E–07	1,02 E–06	1,43 E–06	5,73 E–07
23 000	3,57 E–06	3,22 E–06	2,94 E–06	1,52 E–06	1,85 E–06	6,52 E–07	6,17 E–07	6,23 E–07	6,88 E–07	8,02 E–07	1,03 E–06	7,59 E–07	8,46 E–07	7,89 E–07	9,38 E–07	1,02 E–06	1,41 E–06	5,70 E–07
23 200	5,68 E–06	4,42 E–06	3,89 E–06	2,18 E–06	2,47 E–06	1,13 E–06	1,07 E–06	1,09 E–06	1,23 E–06	1,50 E–06	2,16 E–06	1,12 E–06	9,60 E–07	8,26 E–07	9,81 E–07	1,06 E–06	1,48 E–06	5,97 E–07
23 400	4,65 E–06	3,80 E–06	3,39 E–06	1,85 E–06	2,15 E–06	9,00 E–07	8,55 E–07	8,64 E–07	9,73 E–07	1,17 E–06	1,63 E–06	9,42 E–07	8,90 E–07	7,96 E–07	9,48 E–07	1,03 E–06	1,43 E–06	5,74 E–07
23 500	4,32 E–06	3,60 E–06	3,22 E–06	1,74 E–06	2,04 E–06	8,31 E–07	7,89 E–07	7,98 E–07	8,95 E–07	1,07 E–06	1,47 E–06	8,87 E–07	8,65 E–07	7,85 E–07	9,35 E–07	1,01 E–06	1,41 E–06	5,63 E–07
23 600	3,94 E–06	3,38 E–06	3,05 E–06	1,62 E–06	1,93 E–06	7,38 E–07	7,00 E–07	7,07 E–07	7,89 E–07	9,33 E–07	1,26 E–06	8,11 E–07	8,32 E–07	7,67 E–07	9,12 E–07	9,87 E–07	1,37 E–06	5,53 E–07
23 700	3,84 E–06	3,32 E–06	3,00 E–06	1,58 E–06	1,89 E–06	7,16 E–07	6,78 E–07	6,85 E–07	7,63 E–07	9,02 E–07	1,21 E–06	7,91 E–07	8,19 E–07	7,57 E–07	8,99 E–07	9,72 E–07	1,35 E–06	5,47 E–07
23 800	3,72 E–06	3,24 E–06	2,93 E–06	1,54 E–06	1,84 E–06	6,89 E–07	6,53 E–07	6,59 E–07	7,34 E–07	8,65 E–07	1,15 E–06	7,68 E–07	8,05 E–07	7,48 E–07	8,89 E–07	9,61 E–07	1,33 E–06	5,39 E–07
24 000	5,93 E–06	3,44 E–06	2,99 E–06	1,10 E–06	1,30 E–06	4,08 E–07	3,79 E–07	3,78 E–07	4,10 E–07	4,62 E–07	5,41 E–07	4,99 E–07	6,16 E–07	5,98 E–07	7,17 E–07	7,68 E–07	1,05 E–06	4,23 E–07

Продолжение таблицы 5.6

Высота, км	Плотность потока, $м^{-2} \cdot год^{-1}$																	
	2,5°	7,5°	12,5°	17,5°	22,5°	27,5°	32,5°	37,5°	42,5°	47,5°	52,5°	57,5°	62,5°	67,5°	72,5°	77,5°	82,5°	87,5°
30 000	5,59 E–06	2,99 E–06	2,56 E–06	8,52 E–07	9,77 E–07	3,19 E–07	2,95 E–07	2,94 E–07	3,18 E–07	3,57 E–07	4,15 E–07	3,89 E–07	4,82 E–07	4,69 E–07	5,70 E–07	6,00 E–07	8,02 E–07	3,15 E–07
31 000	6,46 E–06	3,21 E–06	2,70 E–06	8,26 E–07	9,19 E–07	3,08 E–07	2,84 E–07	2,82 E–07	3,05 E–07	3,42 E–07	3,98 E–07	3,71 E–07	4,60 E–07	4,45 E–07	5,44 E–07	5,72 E–07	7,63 E–07	2,95 E–07
32 000	6,32 E–06	3,05 E–06	2,55 E–06	7,54 E–07	8,26 E–07	2,85 E–07	2,63 E–07	2,60 E–07	2,81 E–07	3,16 E–07	3,68 E–07	3,41 E–07	4,22 E–07	4,07 E–07	5,00 E–07	5,28 E–07	7,06 E–07	2,69 E–07
33 000	8,46 E–06	3,72 E–06	3,05 E–06	7,65 E–07	7,86 E–07	2,81 E–07	2,56 E–07	2,52 E–07	2,72 E–07	3,04 E–07	3,55 E–07	3,24 E–07	3,99 E–07	3,85 E–07	4,73 E–07	5,03 E–07	6,75 E–07	2,53 E–07
34 000	9,71 E–06	4,02 E–06	3,25 E–06	7,24 E–07	6,96 E–07	2,68 E–07	2,43 E–07	2,37 E–07	2,56 E–07	2,86 E–07	3,34 E–07	3,01 E–07	3,69 E–07	3,56 E–07	4,42 E–07	4,75 E–07	6,39 E–07	2,29 E–07
35 000	1,25 E–05	4,98 E–06	3,99 E–06	7,81 E–07	7,03 E–07	2,69 E–07	2,39 E–07	2,31 E–07	2,48 E–07	2,76 E–07	3,23 E–07	2,87 E–07	3,49 E–07	3,35 E–07	4,13 E–07	4,45 E–07	6,00 E–07	2,19 E–07
35 500	1,76 E–05	6,67 E–06	5,28 E–06	8,77 E–07	7,02 E–07	2,85 E–07	2,47 E–07	2,35 E–07	2,52 E–07	2,78 E–07	3,26 E–07	2,82 E–07	3,39 E–07	3,26 E–07	4,04 E–07	4,37 E–07	5,89 E–07	2,10 E–07
35 600	2,34 E–05	8,63 E–06	6,79 E–06	1,02 E–06	7,52 E–07	3,11 E–07	2,65 E–07	2,48 E–07	2,65 E–07	2,90 E–07	3,40 E–07	2,89 E–07	3,43 E–07	3,30 E–07	4,09 E–07	4,44 E–07	6,00 E–07	2,14 E–07
35 700	3,01 E–05	1,09 E–05	8,57 E–06	1,19 E–06	8,03 E–07	3,36 E–07	2,79 E–07	2,57 E–07	2,74 E–07	2,97 E–07	3,48 E–07	2,88 E–07	3,38 E–07	3,25 E–07	4,01 E–07	4,34 E–07	5,86 E–07	2,12 E–07
35 710	3,37 E–05	1,22 E–05	9,54 E–06	1,28 E–06	8,44 E–07	3,55 E–07	2,93 E–07	2,67 E–07	2,85 E–07	3,08 E–07	3,62 E–07	2,96 E–07	3,46 E–07	3,33 E–07	4,11 E–07	4,43 E–07	5,96 E–07	2,16 E–07
35 720	3,63 E–05	1,30 E–05	1,02 E–05	1,33 E–06	8,42 E–07	3,62 E–07	2,96 E–07	2,68 E–07	2,85 E–07	3,07 E–07	3,60 E–07	2,91 E–07	3,38 E–07	3,24 E–07	4,00 E–07	4,35 E–07	5,88 E–07	2,11 E–07
35 730	4,11 E–05	1,47 E–05	1,15 E–05	1,46 E–06	8,85 E–07	3,85 E–07	3,11 E–07	2,79 E–07	2,97 E–07	3,18 E–07	3,73 E–07	2,97 E–07	3,42 E–07	3,29 E–07	4,08 E–07	4,41 E–07	5,93 E–07	2,13 E–07
35 740	5,44 E–05	1,92 E–05	1,50 E–05	1,78 E–06	9,77 E–07	4,38 E–07	3,44 E–07	3,01 E–07	3,18 E–07	3,36 E–07	3,95 E–07	3,01 E–07	3,39 E–07	3,25 E–07	4,02 E–07	4,35 E–07	5,85 E–07	2,10 E–07
35 750	7,16 E–05	2,52 E–05	1,95 E–05	2,21 E–06	1,13 E–06	5,17 E–07	3,97 E–07	3,40 E–07	3,57 E–07	3,72 E–07	4,37 E–07	3,20 E–07	3,51 E–07	3,37 E–07	4,16 E–07	4,51 E–07	6,09 E–07	2,20 E–07
35 760	1,22 E–04	4,24 E–05	3,29 E–05	3,44 E–06	1,50 E–06	7,25 E–07	5,28 E–07	4,29 E–07	4,46 E–07	4,49 E–07	5,29 E–07	3,44 E–07	3,47 E–07	3,33 E–07	4,11 E–07	4,43 E–07	5,95 E–07	2,17 E–07
35 770	2,45 E–04	8,43 E–05	6,51 E–05	6,41 E–06	2,37 E–06	1,23 E–06	8,51 E–07	6,50 E–07	6,65 E–07	6,41 E–07	7,56 E–07	4,05 E–07	3,42 E–07	3,29 E–07	4,08 E–07	4,42 E–07	5,96 E–07	2,13 E–07
35 780	2,56 E–04	8,81 E–05	6,81 E–05	6,69 E–06	2,47 E–06	1,28 E–06	8,84 E–07	6,74 E–07	6,89 E–07	6,64 E–07	7,83 E–07	4,17 E–07	3,50 E–07	3,37 E–07	4,15 E–07	4,50 E–07	6,09 E–07	2,20 E–07

Продолжение таблицы 5.6

Высота, км	Плотность потока, $м^{-2} \cdot год^{-1}$																	
	2,5°	7,5°	12,5°	17,5°	22,5°	27,5°	32,5°	37,5°	42,5°	47,5°	52,5°	57,5°	62,5°	67,5°	72,5°	77,5°	82,5°	87,5°
35 790	1,93 E–04	6,65 E–05	5,14 E–05	5,14 E–06	1,98 E–06	1,02 E–06	7,12 E–07	5,54 E–07	5,70 E–07	5,58 E–07	6,57 E–07	3,77 E–07	3,41 E–07	3,28 E–07	4,07 E–07	4,42 E–07	5,95 E–07	2,11 E–07
35 800	1,46 E–04	5,07 E–05	3,92 E–05	4,03 E–06	1,66 E–06	8,26 E–07	5,92 E–07	4,72 E–07	4,89 E–07	4,87 E–07	5,73 E–07	3,55 E–07	3,45 E–07	3,31 E–07	4,10 E–07	4,44 E–07	5,99 E–07	2,16 E–07
35 810	1,24 E–04	4,31 E–05	3,34 E–05	3,50 E–06	1,52 E–06	7,36 E–07	5,35 E–07	4,35 E–07	4,51 E–07	4,55 E–07	5,35 E–07	3,47 E–07	3,50 E–07	3,36 E–07	4,14 E–07	4,48 E–07	6,06 E–07	2,21 E–07
35 820	1,04 E–04	3,62 E–05	2,81 E–05	2,99 E–06	1,34 E–06	6,46 E–07	4,77 E–07	3,93 E–07	4,09 E–07	4,16 E–07	4,90 E–07	3,29 E–07	3,40 E–07	3,26 E–07	4,04 E–07	4,37 E–07	5,88 E–07	2,10 E–07
35 830	9,03 E–05	3,15 E–05	2,44 E–05	2,67 E–06	1,27 E–06	5,92 E–07	4,43 E–07	3,71 E–07	3,87 E–07	3,98 E–07	4,68 E–07	3,27 E–07	3,47 E–07	3,33 E–07	4,10 E–07	4,43 E–07	5,95 E–07	2,17 E–07
35 840	8,00 E–05	2,80 E–05	2,17 E–05	2,41 E–06	1,19 E–06	5,47 E–07	4,14 E–07	3,50 E–07	3,67 E–07	3,79 E–07	4,46 E–07	3,18 E–07	3,43 E–07	3,29 E–07	4,04 E–07	4,39 E–07	5,92 E–07	2,16 E–07
35 850	7,04 E–05	2,46 E–05	1,91 E–05	2,16 E–06	1,10 E–06	5,07 E–07	3,89 E–07	3,33 E–07	3,51 E–07	3,65 E–07	4,29 E–07	3,15 E–07	3,45 E–07	3,31 E–07	4,10 E–07	4,45 E–07	6,01 E–07	2,15 E–07
35 860	6,42 E–05	2,25 E–05	1,75 E–05	2,01 E–06	1,05 E–06	4,79 E–07	3,71 E–07	3,20 E–07	3,37 E–07	3,53 E–07	4,15 E–07	3,08 E–07	3,41 E–07	3,27 E–07	4,04 E–07	4,39 E–07	5,93 E–07	2,13 E–07
35 870	5,80 E–05	2,05 E–05	1,59 E–05	1,90 E–06	1,05 E–06	4,62 E–07	3,63 E–07	3,17 E–07	3,35 E–07	3,53 E–07	4,14 E–07	3,17 E–07	3,56 E–07	3,42 E–07	4,20 E–07	4,54 E–07	6,13 E–07	2,26 E–07
35 880	5,51 E–05	1,94 E–05	1,51 E–05	1,78 E–06	9,65 E–07	4,40 E–07	3,45 E–07	3,02 E–07	3,19 E–07	3,36 E–07	3,95 E–07	3,01 E–07	3,37 E–07	3,24 E–07	4,02 E–07	4,37 E–07	5,90 E–07	2,09 E–07
35 890	5,44 E–05	1,92 E–05	1,49 E–05	1,78 E–06	9,83 E–07	4,35 E–07	3,41 E–07	2,99 E–07	3,15 E–07	3,33 E–07	3,91 E–07	2,98 E–07	3,35 E–07	3,21 E–07	3,95 E–07	4,26 E–07	5,73 E–07	2,10 E–07
35 900	4,36 E–05	1,54 E–05	1,20 E–05	1,48 E–06	8,59 E–07	3,84 E–07	3,08 E–07	2,74 E–07	2,91 E–07	3,10 E–07	3,64 E–07	2,86 E–07	3,26 E–07	3,13 E–07	3,89 E–07	4,23 E–07	5,69 E–07	2,01 E–07
36 000	4,09 E–05	1,46 E–05	1,14 E–05	1,44 E–06	8,68 E–07	3,77 E–07	3,04 E–07	2,72 E–07	2,89 E–07	3,09 E–07	3,63 E–07	2,88 E–07	3,31 E–07	3,17 E–07	3,92 E–07	4,24 E–07	5,72 E–07	2,07 E–07
36 100	3,81 E–05	1,35 E–05	1,06 E–05	1,33 E–06	8,01 E–07	3,57 E–07	2,89 E–07	2,60 E–07	2,76 E–07	2,96 E–07	3,47 E–07	2,76 E–07	3,18 E–07	3,05 E–07	3,79 E–07	4,13 E–07	5,56 E–07	1,95 E–07
36 200	2,81 E–05	1,01 E–05	7,94 E–06	1,09 E–06	7,28 E–07	3,13 E–07	2,61 E–07	2,39 E–07	2,55 E–07	2,77 E–07	3,25 E–07	2,68 E–07	3,14 E–07	3,01 E–07	3,74 E–07	4,07 E–07	5,50 E–07	1,94 E–07
36 300	2,32 E–05	8,44 E–06	6,63 E–06	9,67 E–07	6,86 E–07	2,91 E–07	2,46 E–07	2,29 E–07	2,44 E–07	2,67 E–07	3,13 E–07	2,63 E–07	3,11 E–07	2,98 E–07	3,70 E–07	4,03 E–07	5,45 E–07	1,93 E–07
36 400	1,83 E–05	6,80 E–06	5,36 E–06	8,51 E–07	6,55 E–07	2,66 E–07	2,29 E–07	2,16 E–07	2,31 E–07	2,54 E–07	2,98 E–07	2,55 E–07	3,05 E–07	2,91 E–07	3,60 E–07	3,91 E–07	5,27 E–07	1,90 E–07

Окончание таблицы 5.6

Высота, км	Плотность потока, $м^{-2} \cdot год^{-1}$																	
	2,5°	7,5°	12,5°	17,5°	22,5°	27,5°	32,5°	37,5°	42,5°	47,5°	52,5°	57,5°	62,5°	67,5°	72,5°	77,5°	82,5°	87,5°
36 500	1,05 E–05	4,08 E–06	3,25 E–06	6,26 E–07	5,52 E–07	2,20 E–07	1,95 E–07	1,88 E–07	2,03 E–07	2,25 E–07	2,65 E–07	2,33 E–07	2,82 E–07	2,69 E–07	3,33 E–07	3,64 E–07	4,92 E–07	1,75 E–07
37 000	5,89 E–06	2,45 E–06	1,98 E–06	4,55 E–07	4,40 E–07	1,76 E–07	1,59 E–07	1,55 E–07	1,68 E–07	1,88 E–07	2,21 E–07	1,96 E–07	2,39 E–07	2,27 E–07	2,81 E–07	3,09 E–07	4,21 E–07	1,48 E–07
38 000	3,63 E–06	1,61 E–06	1,31 E–06	3,45 E–07	3,52 E–07	1,40 E–07	1,28 E–07	1,26 E–07	1,36 E–07	1,53 E–07	1,80 E–07	1,60 E–07	1,95 E–07	1,84 E–07	2,27 E–07	2,53 E–07	3,48 E–07	1,22 E–07
39 000	2,41 E–06	1,13 E–06	9,30 E–07	2,70 E–07	2,83 E–07	1,14 E–07	1,04 E–07	1,02 E–07	1,11 E–07	1,25 E–07	1,48 E–07	1,31 E–07	1,60 E–07	1,49 E–07	1,83 E–07	2,05 E–07	2,82 E–07	9,84 E–08

Таблица 5.7 — Плотность потока КО размером от 0,5 до 1,0 см относительно ИСК

Высота, км	Плотность потока, $м^{-2} \cdot год^{-1}$																	
	2,5°	7,5°	12,5°	17,5°	22,5°	27,5°	32,5°	37,5°	42,5°	47,5°	52,5°	57,5°	62,5°	67,5°	72,5°	77,5°	82,5°	87,5°
200	1,66 E–04	1,66 E–04	1,74 E–04	1,74 E–04	1,81 E–04	1,76 E–04	1,69 E–04	1,73 E–04	1,92 E–04	2,19 E–04	2,46 E–04	2,25 E–04	2,77 E–04	2,95 E–04	4,04 E–04	4,50 E–04	6,65 E–04	1,70 E–04
300	3,44 E–04	3,44 E–04	3,62 E–04	3,62 E–04	3,77 E–04	3,66 E–04	3,52 E–04	3,61 E–04	4,00 E–04	4,55 E–04	5,12 E–04	4,67 E–04	5,77 E–04	6,13 E–04	8,41 E–04	9,36 E–04	1,38 E–03	3,53 E–04
400	6,96 E–04	6,96 E–04	7,31 E–04	7,31 E–04	7,61 E–04	7,41 E–04	7,12 E–04	7,29 E–04	8,08 E–04	9,19 E–04	1,04 E–03	9,44 E–04	1,17 E–03	1,24 E–03	1,70 E–03	1,89 E–03	2,79 E–03	7,14 E–04
500	1,01 E–03	1,01 E–03	1,06 E–03	1,06 E–03	1,10 E–03	1,07 E–03	1,03 E–03	1,05 E–03	1,17 E–03	1,33 E–03	1,50 E–03	1,36 E–03	1,69 E–03	1,79 E–03	2,46 E–03	2,74 E–03	4,04 E–03	1,03 E–03
600	1,15 E–03	1,15 E–03	1,21 E–03	1,21 E–03	1,26 E–03	1,22 E–03	1,18 E–03	1,21 E–03	1,34 E–03	1,52 E–03	1,71 E–03	1,56 E–03	1,93 E–03	2,05 E–03	2,81 E–03	3,13 E–03	4,62 E–03	1,18 E–03
700	1,46 E–03	1,46 E–03	1,53 E–03	1,53 E–03	1,59 E–03	1,55 E–03	1,49 E–03	1,53 E–03	1,69 E–03	1,92 E–03	2,17 E–03	1,97 E–03	2,44 E–03	2,59 E–03	3,56 E–03	3,96 E–03	5,85 E–03	1,49 E–03
800	1,33 E–03	1,33 E–03	1,38 E–03	1,38 E–03	1,43 E–03	1,43 E–03	1,41 E–03	1,47 E–03	1,62 E–03	1,81 E–03	2,01 E–03	2,13 E–03	2,68 E–03	2,81 E–03	3,61 E–03	4,78 E–03	6,49 E–03	1,60 E–03
900	9,08 E–04	9,08 E–04	9,32 E–04	9,32 E–04	9,69 E–04	9,74 E–04	9,71 E–04	1,02 E–03	1,12 E–03	1,24 E–03	1,37 E–03	1,54 E–03	1,94 E–03	2,03 E–03	2,55 E–03	3,55 E–03	4,72 E–03	1,15 E–03
1000	5,13 E–04	5,13 E–04	5,27 E–04	5,27 E–04	5,47 E–04	5,50 E–04	5,49 E–04	5,77 E–04	6,33 E–04	7,03 E–04	7,77 E–04	8,71 E–04	1,10 E–03	1,15 E–03	1,44 E–03	2,02 E–03	2,68 E–03	6,54 E–04
1100	2,99 E–04	2,99 E–04	3,07 E–04	3,07 E–04	3,20 E–04	3,21 E–04	3,20 E–04	3,36 E–04	3,69 E–04	4,09 E–04	4,53 E–04	5,05 E–04	6,37 E–04	6,66 E–04	8,39 E–04	1,16 E–03	1,55 E–03	3,79 E–04

Продолжение таблицы 5.7

Высота, км	Плотность потока, $м^{-2} \cdot год^{-1}$																	
	2,5°	7,5°	12,5°	17,5°	22,5°	27,5°	32,5°	37,5°	42,5°	47,5°	52,5°	57,5°	62,5°	67,5°	72,5°	77,5°	82,5°	87,5°
1700	5,33 E–05	5,33 E–05	5,49 E–05	5,49 E–05	5,61 E–05	5,52 E–05	5,63 E–05	5,96 E–05	6,58 E–05	7,47 E–05	8,38 E–05	8,75 E–05	1,08 E–04	1,18 E–04	1,72 E–04	1,57 E–04	1,46 E–04	2,71 E–05
1800	4,20 E–05	4,20 E–05	4,32 E–05	4,32 E–05	4,42 E–05	4,34 E–05	4,43 E–05	4,69 E–05	5,18 E–05	5,89 E–05	6,61 E–05	6,89 E–05	8,47 E–05	9,32 E–05	1,36 E–04	1,23 E–04	1,13 E–04	2,06 E–05
1900	3,14 E–05	3,14 E–05	3,24 E–05	3,24 E–05	3,31 E–05	3,25 E–05	3,32 E–05	3,51 E–05	3,88 E–05	4,41 E–05	4,95 E–05	5,15 E–05	6,33 E–05	6,96 E–05	1,02 E–04	9,18 E–05	8,46 E–05	1,55 E–05
2000	5,39 E–06	4,90 E–06	5,39 E–06	4,90 E–06	5,25 E–06	4,53 E–06	4,46 E–06	4,63 E–06	5,12 E–06	5,80 E–06	6,51 E–06	6,42 E–06	7,95 E–06	8,51 E–06	1,17 E–05	1,25 E–05	1,58 E–05	3,85 E–06
4000	2,82 E–06	2,73 E–06	2,59 E–06	1,46 E–06	1,83 E–06	7,01 E–07	6,71 E–07	6,85 E–07	7,52 E–07	8,47 E–07	9,57 E–07	9,33 E–07	1,17 E–06	1,21 E–06	1,52 E–06	1,66 E–06	2,35 E–06	8,03 E–07
9000	9,44 E–07	8,86 E–07	8,15 E–07	4,40 E–07	5,44 E–07	2,14 E–07	2,02 E–07	2,05 E–07	2,24 E–07	2,52 E–07	2,84 E–07	2,75 E–07	3,45 E–07	3,54 E–07	4,45 E–07	4,91 E–07	7,00 E–07	2,38 E–07
18 000	8,44 E–07	7,57 E–07	6,81 E–07	3,92 E–07	4,60 E–07	2,15 E–07	2,08 E–07	2,15 E–07	2,33 E–07	2,66 E–07	3,13 E–07	3,33 E–07	4,76 E–07	2,41 E–07	2,78 E–07	3,04 E–07	4,32 E–07	1,54 E–07
19 000	3,49 E–06	2,49 E–06	2,04 E–06	1,66 E–06	1,63 E–06	1,35 E–06	1,36 E–06	1,46 E–06	1,57 E–06	1,83 E–06	2,26 E–06	2,65 E–06	4,23 E–06	4,95 E–07	2,96 E–07	3,23 E–07	4,58 E–07	1,66 E–07
19 100	3,90 E–06	2,75 E–06	2,25 E–06	1,85 E–06	1,81 E–06	1,53 E–06	1,54 E–06	1,66 E–06	1,79 E–06	2,07 E–06	2,57 E–06	3,03 E–06	4,83 E–06	5,29 E–07	2,91 E–07	3,16 E–07	4,49 E–07	1,63 E–07
19 200	2,22 E–06	1,65 E–06	1,39 E–06	1,05 E–06	1,07 E–06	8,04 E–07	8,04 E–07	8,62 E–07	9,27 E–07	1,07 E–06	1,32 E–06	1,54 E–06	2,42 E–06	3,66 E–07	2,77 E–07	3,02 E–07	4,28 E–07	1,56 E–07
19 300	1,30 E–06	1,06 E–06	9,18 E–07	6,13 E–07	6,65 E–07	4,13 E–07	4,09 E–07	4,34 E–07	4,67 E–07	5,38 E–07	6,55 E–07	7,43 E–07	1,14 E–06	2,75 E–07	2,66 E–07	2,90 E–07	4,11 E–07	1,50 E–07
19 400	9,17 E–07	7,94 E–07	7,07 E–07	4,28 E–07	4,89 E–07	2,53 E–07	2,48 E–07	2,60 E–07	2,80 E–07	3,21 E–07	3,85 E–07	4,23 E–07	6,29 E–07	2,28 E–07	2,47 E–07	2,69 E–07	3,81 E–07	1,40 E–07
19 600	8,34 E–07	7,40 E–07	6,64 E–07	3,89 E–07	4,53 E–07	2,18 E–07	2,12 E–07	2,21 E–07	2,39 E–07	2,73 E–07	3,25 E–07	3,53 E–07	5,17 E–07	2,16 E–07	2,40 E–07	2,61 E–07	3,70 E–07	1,37 E–07
19 800	9,69 E–07	8,29 E–07	7,34 E–07	4,53 E–07	5,12 E–07	2,75 E–07	2,70 E–07	2,84 E–07	3,06 E–07	3,51 E–07	4,23 E–07	4,71 E–07	7,07 E–07	2,28 E–07	2,40 E–07	2,60 E–07	3,68 E–07	1,37 E–07
20 000	1,10 E–06	8,75 E–07	7,68 E–07	4,60 E–07	5,15 E–07	2,66 E–07	2,58 E–07	2,66 E–07	2,95 E–07	3,48 E–07	4,62 E–07	3,59 E–07	4,53 E–07	2,06 E–07	2,33 E–07	2,53 E–07	3,57 E–07	1,33 E–07
20 100	1,06 E–06	8,39 E–07	7,39 E–07	4,28 E–07	4,84 E–07	2,34 E–07	2,25 E–07	2,29 E–07	2,57 E–07	3,06 E–07	4,20 E–07	2,74 E–07	2,99 E–07	1,93 E–07	2,28 E–07	2,48 E–07	3,50 E–07	1,31 E–07
20 200	8,28 E–07	7,04 E–07	6,31 E–07	3,50 E–07	4,11 E–07	1,77 E–07	1,69 E–07	1,72 E–07	1,91 E–07	2,24 E–07	2,94 E–07	2,15 E–07	2,48 E–07	1,83 E–07	2,19 E–07	2,37 E–07	3,35 E–07	1,26 E–07

Продолжение таблицы 5.7

Высота, км	Плотность потока, $м^{-2} \cdot год^{-1}$																	
	2,5°	7,5°	12,5°	17,5°	22,5°	27,5°	32,5°	37,5°	42,5°	47,5°	52,5°	57,5°	62,5°	67,5°	72,5°	77,5°	82,5°	87,5°
20 300	7,49 E–07	6,57 E–07	5,94 E–07	3,23 E–07	3,85 E–07	1,57 E–07	1,49 E–07	1,52 E–07	1,68 E–07	1,95 E–07	2,50 E–07	1,93 E–07	2,28 E–07	1,79 E–07	2,14 E–07	2,33 E–07	3,28 E–07	1,24 E–07
20 400	9,86 E–07	7,89 E–07	6,97 E–07	3,95 E–07	4,51 E–07	2,08 E–07	1,99 E–07	2,02 E–07	2,27 E–07	2,71 E–07	3,76 E–07	2,27 E–07	2,28 E–07	1,80 E–07	2,16 E–07	2,34 E–07	3,30 E–07	1,25 E–07
20 600	7,62 E–07	6,56 E–07	5,91 E–07	3,20 E–07	3,80 E–07	1,54 E–07	1,47 E–07	1,49 E–07	1,65 E–07	1,94 E–07	2,55 E–07	1,79 E–07	1,97 E–07	1,68 E–07	2,03 E–07	2,20 E–07	3,09 E–07	1,18 E–07
20 800	7,17 E–07	6,29 E–07	5,70 E–07	3,05 E–07	3,65 E–07	1,42 E–07	1,35 E–07	1,37 E–07	1,52 E–07	1,78 E–07	2,30 E–07	1,66 E–07	1,85 E–07	1,63 E–07	1,97 E–07	2,13 E–07	2,99 E–07	1,15 E–07
21 000	7,54 E–07	6,48 E–07	5,84 E–07	3,15 E–07	3,74 E–07	1,49 E–07	1,42 E–07	1,43 E–07	1,60 E–07	1,88 E–07	2,50 E–07	1,69 E–07	1,82 E–07	1,60 E–07	1,92 E–07	2,08 E–07	2,92 E–07	1,13 E–07
21 100	8,14 E–07	6,81 E–07	6,10 E–07	3,33 E–07	3,90 E–07	1,63 E–07	1,55 E–07	1,57 E–07	1,75 E–07	2,08 E–07	2,82 E–07	1,79 E–07	1,83 E–07	1,60 E–07	1,93 E–07	2,08 E–07	2,92 E–07	1,14 E–07
21 200	8,71 E–07	7,09 E–07	6,31 E–07	3,49 E–07	4,04 E–07	1,76 E–07	1,67 E–07	1,69 E–07	1,90 E–07	2,28 E–07	3,16 E–07	1,88 E–07	1,83 E–07	1,59 E–07	1,91 E–07	2,06 E–07	2,89 E–07	1,12 E–07
21 300	8,99 E–07	7,28 E–07	6,47 E–07	3,59 E–07	4,14 E–07	1,81 E–07	1,72 E–07	1,74 E–07	1,96 E–07	2,35 E–07	3,28 E–07	1,91 E–07	1,83 E–07	1,59 E–07	1,90 E–07	2,06 E–07	2,89 E–07	1,13 E–07
21 400	1,18 E–06	8,79 E–07	7,63 E–07	4,44 E–07	4,90 E–07	2,45 E–07	2,34 E–07	2,37 E–07	2,70 E–07	3,30 E–07	4,84 E–07	2,38 E–07	1,94 E–07	1,59 E–07	1,91 E–07	2,06 E–07	2,89 E–07	1,13 E–07
21 600	8,06 E–07	6,68 E–07	5,98 E–07	3,26 E–07	3,81 E–07	1,58 E–07	1,50 E–07	1,52 E–07	1,70 E–07	2,03 E–07	2,80 E–07	1,70 E–07	1,68 E–07	1,48 E–07	1,77 E–07	1,91 E–07	2,67 E–07	1,06 E–07
21 800	7,10 E–07	6,10 E–07	5,51 E–07	2,94 E–07	3,50 E–07	1,36 E–07	1,29 E–07	1,30 E–07	1,45 E–07	1,71 E–07	2,29 E–07	1,51 E–07	1,59 E–07	1,43 E–07	1,71 E–07	1,84 E–07	2,58 E–07	1,03 E–07
22 000	7,92 E–07	6,56 E–07	5,88 E–07	3,19 E–07	3,73 E–07	1,53 E–07	1,46 E–07	1,47 E–07	1,65 E–07	1,97 E–07	2,72 E–07	1,64 E–07	1,61 E–07	1,42 E–07	1,69 E–07	1,83 E–07	2,55 E–07	1,03 E–07
22 200	6,61 E–07	5,77 E–07	5,23 E–07	2,76 E–07	3,31 E–07	1,24 E–07	1,18 E–07	1,19 E–07	1,32 E–07	1,56 E–07	2,06 E–07	1,40 E–07	1,50 E–07	1,36 E–07	1,62 E–07	1,75 E–07	2,45 E–07	9,84 E–08
22 400	6,12 E–07	5,45 E–07	4,97 E–07	2,59 E–07	3,14 E–07	1,14 E–07	1,08 E–07	1,09 E–07	1,20 E–07	1,41 E–07	1,83 E–07	1,31 E–07	1,45 E–07	1,33 E–07	1,59 E–07	1,72 E–07	2,40 E–07	9,60 E–08
22 600	5,70 E–07	5,18 E–07	4,74 E–07	2,44 E–07	2,99 E–07	1,05 E–07	9,89 E–08	9,98 E–08	1,10 E–07	1,28 E–07	1,62 E–07	1,24 E–07	1,40 E–07	1,31 E–07	1,56 E–07	1,69 E–07	2,36 E–07	9,43 E–08
22 800	5,51 E–07	5,06 E–07	4,64 E–07	2,38 E–07	2,92 E–07	1,00 E–07	9,45 E–08	9,54 E–08	1,05 E–07	1,22 E–07	1,53 E–07	1,19 E–07	1,37 E–07	1,28 E–07	1,53 E–07	1,65 E–07	2,30 E–07	9,25 E–08
23 000	5,75 E–07	5,19 E–07	4,74 E–07	2,45 E–07	2,98 E–07	1,05 E–07	9,95 E–08	1,00 E–07	1,11 E–07	1,29 E–07	1,66 E–07	1,22 E–07	1,36 E–07	1,27 E–07	1,51 E–07	1,64 E–07	2,28 E–07	9,19 E–08

Продолжение таблицы 5.7

Высота, км	Плотность потока, $м^{-2} \cdot год^{-1}$																	
	2,5°	7,5°	12,5°	17,5°	22,5°	27,5°	32,5°	37,5°	42,5°	47,5°	52,5°	57,5°	62,5°	67,5°	72,5°	77,5°	82,5°	87,5°
23 200	9,16 E–07	7,13 E–07	6,27 E–07	3,52 E–07	3,98 E–07	1,82 E–07	1,73 E–07	1,75 E–07	1,99 E–07	2,42 E–07	3,49 E–07	1,81 E–07	1,55 E–07	1,33 E–07	1,58 E–07	1,71 E–07	2,38 E–07	9,62 E–08
23 400	7,50 E–07	6,14 E–07	5,47 E–07	2,98 E–07	3,46 E–07	1,45 E–07	1,38 E–07	1,39 E–07	1,57 E–07	1,88 E–07	2,63 E–07	1,52 E–07	1,44 E–07	1,28 E–07	1,53 E–07	1,66 E–07	2,30 E–07	9,25 E–08
23 500	6,97 E–07	5,80 E–07	5,19 E–07	2,80 E–07	3,29 E–07	1,34 E–07	1,27 E–07	1,29 E–07	1,44 E–07	1,72 E–07	2,37 E–07	1,43 E–07	1,40 E–07	1,27 E–07	1,51 E–07	1,64 E–07	2,27 E–07	9,09 E–08
23 600	6,35 E–07	5,46 E–07	4,93 E–07	2,61 E–07	3,11 E–07	1,19 E–07	1,13 E–07	1,14 E–07	1,27 E–07	1,51 E–07	2,03 E–07	1,31 E–07	1,34 E–07	1,24 E–07	1,47 E–07	1,59 E–07	2,21 E–07	8,92 E–08
23 700	6,20 E–07	5,36 E–07	4,84 E–07	2,55 E–07	3,05 E–07	1,15 E–07	1,09 E–07	1,10 E–07	1,23 E–07	1,45 E–07	1,95 E–07	1,28 E–07	1,32 E–07	1,22 E–07	1,45 E–07	1,57 E–07	2,17 E–07	8,81 E–08
23 800	5,99 E–07	5,22 E–07	4,73 E–07	2,48 E–07	2,97 E–07	1,11 E–07	1,05 E–07	1,06 E–07	1,18 E–07	1,39 E–07	1,86 E–07	1,24 E–07	1,30 E–07	1,21 E–07	1,43 E–07	1,55 E–07	2,15 E–07	8,70 E–08
24 000	9,57 E–07	5,55 E–07	4,83 E–07	1,77 E–07	2,09 E–07	6,58 E–08	6,11 E–08	6,10 E–08	6,61 E–08	7,45 E–08	8,73 E–08	8,04 E–08	9,93 E–08	9,65 E–08	1,16 E–07	1,24 E–07	1,70 E–07	6,82 E–08
30 000	9,01 E–07	4,83 E–07	4,12 E–07	1,37 E–07	1,58 E–07	5,14 E–08	4,76 E–08	4,74 E–08	5,12 E–08	5,76 E–08	6,69 E–08	6,27 E–08	7,78 E–08	7,56 E–08	9,20 E–08	9,68 E–08	1,29 E–07	5,07 E–08
31 000	1,04 E–06	5,18 E–07	4,36 E–07	1,33 E–07	1,48 E–07	4,97 E–08	4,58 E–08	4,54 E–08	4,91 E–08	5,51 E–08	6,42 E–08	5,98 E–08	7,41 E–08	7,18 E–08	8,77 E–08	9,22 E–08	1,23 E–07	4,77 E–08
32 000	1,02 E–06	4,92 E–07	4,12 E–07	1,22 E–07	1,33 E–07	4,60 E–08	4,23 E–08	4,20 E–08	4,54 E–08	5,09 E–08	5,93 E–08	5,50 E–08	6,81 E–08	6,57 E–08	8,06 E–08	8,52 E–08	1,14 E–07	4,33 E–08
33 000	1,36 E–06	5,99 E–07	4,92 E–07	1,23 E–07	1,27 E–07	4,53 E–08	4,13 E–08	4,06 E–08	4,38 E–08	4,90 E–08	5,72 E–08	5,23 E–08	6,44 E–08	6,21 E–08	7,63 E–08	8,11 E–08	1,09 E–07	4,08 E–08
34 000	1,57 E–06	6,49 E–07	5,25 E–07	1,17 E–07	1,12 E–07	4,33 E–08	3,91 E–08	3,82 E–08	4,13 E–08	4,61 E–08	5,39 E–08	4,86 E–08	5,94 E–08	5,74 E–08	7,13 E–08	7,66 E–08	1,03 E–07	3,70 E–08
35 000	2,02 E–06	8,03 E–07	6,43 E–07	1,26 E–07	1,13 E–07	4,34 E–08	3,85 E–08	3,72 E–08	4,01 E–08	4,45 E–08	5,21 E–08	4,63 E–08	5,63 E–08	5,41 E–08	6,67 E–08	7,18 E–08	9,68 E–08	3,54 E–08
35 500	2,84 E–06	1,08 E–06	8,51 E–07	1,42 E–07	1,13 E–07	4,59 E–08	3,99 E–08	3,79 E–08	4,07 E–08	4,49 E–08	5,26 E–08	4,55 E–08	5,46 E–08	5,25 E–08	6,51 E–08	7,05 E–08	9,50 E–08	3,39 E–08
35 600	3,77 E–06	1,39 E–06	1,10 E–06	1,65 E–07	1,21 E–07	5,02 E–08	4,27 E–08	4,00 E–08	4,28 E–08	4,68 E–08	5,49 E–08	4,66 E–08	5,54 E–08	5,32 E–08	6,60 E–08	7,16 E–08	9,67 E–08	3,45 E–08
35 700	4,85 E–06	1,76 E–06	1,38 E–06	1,91 E–07	1,30 E–07	5,42 E–08	4,51 E–08	4,14 E–08	4,42 E–08	4,79 E–08	5,62 E–08	4,65 E–08	5,46 E–08	5,24 E–08	6,47 E–08	7,00 E–08	9,45 E–08	3,42 E–08
35 710	5,44 E–06	1,96 E–06	1,54 E–06	2,07 E–07	1,36 E–07	5,72 E–08	4,72 E–08	4,31 E–08	4,60 E–08	4,97 E–08	5,83 E–08	4,78 E–08	5,58 E–08	5,37 E–08	6,63 E–08	7,15 E–08	9,61 E–08	3,49 E–08

Продолжение таблицы 5.7

Высота, км	Плотность потока, $м^{-2} \cdot год^{-1}$																	
	2,5°	7,5°	12,5°	17,5°	22,5°	27,5°	32,5°	37,5°	42,5°	47,5°	52,5°	57,5°	62,5°	67,5°	72,5°	77,5°	82,5°	87,5°
35 720	5,85 E–06	2,10 E–06	1,64 E–06	2,15 E–07	1,36 E–07	5,83 E–08	4,77 E–08	4,32 E–08	4,60 E–08	4,95 E–08	5,81 E–08	4,70 E–08	5,45 E–08	5,23 E–08	6,46 E–08	7,01 E–08	9,48 E–08	3,41 E–08
35 730	6,62 E–06	2,37 E–06	1,85 E–06	2,35 E–07	1,43 E–07	6,20 E–08	5,02 E–08	4,51 E–08	4,78 E–08	5,12 E–08	6,01 E–08	4,80 E–08	5,52 E–08	5,31 E–08	6,57 E–08	7,11 E–08	9,56 E–08	3,43 E–08
35 740	8,77 E–06	3,10 E–06	2,42 E–06	2,87 E–07	1,58 E–07	7,06 E–08	5,55 E–08	4,86 E–08	5,13 E–08	5,42 E–08	6,36 E–08	4,86 E–08	5,46 E–08	5,24 E–08	6,48 E–08	7,01 E–08	9,43 E–08	3,39 E–08
35 750	1,16 E–05	4,06 E–06	3,15 E–06	3,57 E–07	1,82 E–07	8,34 E–08	6,40 E–08	5,48 E–08	5,76 E–08	6,00 E–08	7,05 E–08	5,16 E–08	5,65 E–08	5,43 E–08	6,71 E–08	7,27 E–08	9,83 E–08	3,55 E–08
35 760	1,97 E–05	6,84 E–06	5,30 E–06	5,55 E–07	2,41 E–07	1,17 E–07	8,52 E–08	6,92 E–08	7,19 E–08	7,24 E–08	8,53 E–08	5,55 E–08	5,60 E–08	5,37 E–08	6,62 E–08	7,14 E–08	9,60 E–08	3,50 E–08
35 770	3,95 E–05	1,36 E–05	1,05 E–05	1,03 E–06	3,82 E–07	1,99 E–07	1,37 E–07	1,05 E–07	1,07 E–07	1,03 E–07	1,22 E–07	6,53 E–08	5,52 E–08	5,30 E–08	6,58 E–08	7,12 E–08	9,61 E–08	3,43 E–08
35 780	4,12 E–05	1,42 E–05	1,10 E–05	1,08 E–06	3,99 E–07	2,07 E–07	1,43 E–07	1,09 E–07	1,11 E–07	1,07 E–07	1,26 E–07	6,73 E–08	5,65 E–08	5,43 E–08	6,70 E–08	7,26 E–08	9,82 E–08	3,55 E–08
35 790	3,11 E–05	1,07 E–05	8,29 E–06	8,29 E–07	3,19 E–07	1,64 E–07	1,15 E–07	8,94 E–08	9,19 E–08	8,99 E–08	1,06 E–07	6,08 E–08	5,51 E–08	5,29 E–08	6,57 E–08	7,12 E–08	9,59 E–08	3,40 E–08
35 800	2,36 E–05	8,17 E–06	6,33 E–06	6,49 E–07	2,68 E–07	1,33 E–07	9,55 E–08	7,62 E–08	7,88 E–08	7,85 E–08	9,24 E–08	5,73 E–08	5,57 E–08	5,34 E–08	6,61 E–08	7,16 E–08	9,67 E–08	3,48 E–08
35 810	2,00 E–05	6,95 E–06	5,39 E–06	5,64 E–07	2,45 E–07	1,19 E–07	8,64 E–08	7,01 E–08	7,28 E–08	7,33 E–08	8,63 E–08	5,60 E–08	5,65 E–08	5,42 E–08	6,68 E–08	7,22 E–08	9,77 E–08	3,56 E–08
35 820	1,68 E–05	5,85 E–06	4,53 E–06	4,81 E–07	2,15 E–07	1,04 E–07	7,69 E–08	6,33 E–08	6,60 E–08	6,71 E–08	7,90 E–08	5,30 E–08	5,48 E–08	5,25 E–08	6,51 E–08	7,04 E–08	9,48 E–08	3,39 E–08
35 830	1,46 E–05	5,08 E–06	3,94 E–06	4,30 E–07	2,04 E–07	9,54 E–08	7,15 E–08	5,98 E–08	6,25 E–08	6,42 E–08	7,54 E–08	5,27 E–08	5,59 E–08	5,37 E–08	6,61 E–08	7,14 E–08	9,60 E–08	3,50 E–08
35 840	1,29 E–05	4,52 E–06	3,50 E–06	3,89 E–07	1,91 E–07	8,82 E–08	6,68 E–08	5,65 E–08	5,91 E–08	6,11 E–08	7,19 E–08	5,13 E–08	5,53 E–08	5,30 E–08	6,52 E–08	7,08 E–08	9,55 E–08	3,49 E–08
35 850	1,13 E–05	3,97 E–06	3,09 E–06	3,49 E–07	1,77 E–07	8,18 E–08	6,28 E–08	5,38 E–08	5,66 E–08	5,89 E–08	6,93 E–08	5,07 E–08	5,56 E–08	5,34 E–08	6,62 E–08	7,18 E–08	9,70 E–08	3,47 E–08
35 860	1,04 E–05	3,63 E–06	2,82 E–06	3,25 E–07	1,69 E–07	7,73 E–08	5,98 E–08	5,16 E–08	5,43 E–08	5,69 E–08	6,69 E–08	4,97 E–08	5,49 E–08	5,27 E–08	6,52 E–08	7,08 E–08	9,57 E–08	3,44 E–08
35 870	9,36 E–06	3,30 E–06	2,57 E–06	3,06 E–07	1,70 E–07	7,46 E–08	5,85 E–08	5,12 E–08	5,40 E–08	5,69 E–08	6,68 E–08	5,11 E–08	5,74 E–08	5,52 E–08	6,78 E–08	7,32 E–08	9,89 E–08	3,64 E–08
35 880	8,88 E–06	3,13 E–06	2,43 E–06	2,87 E–07	1,56 E–07	7,09 E–08	5,57 E–08	4,87 E–08	5,14 E–08	5,42 E–08	6,37 E–08	4,85 E–08	5,44 E–08	5,22 E–08	6,48 E–08	7,05 E–08	9,51 E–08	3,37 E–08

Окончание таблицы 5.7

Высота, км	Плотность потока, $м^{-2} \cdot год^{-1}$																	
	2,5°	7,5°	12,5°	17,5°	22,5°	27,5°	32,5°	37,5°	42,5°	47,5°	52,5°	57,5°	62,5°	67,5°	72,5°	77,5°	82,5°	87,5°
35 890	8,77 E–06	3,09 E–06	2,41 E–06	2,86 E–07	1,59 E–07	7,01 E–08	5,51 E–08	4,82 E–08	5,08 E–08	5,37 E–08	6,31 E–08	4,81 E–08	5,40 E–08	5,17 E–08	6,38 E–08	6,87 E–08	9,25 E–08	3,38 E–08
35 900	7,03 E–06	2,49 E–06	1,94 E–06	2,39 E–07	1,38 E–07	6,20 E–08	4,97 E–08	4,43 E–08	4,69 E–08	5,00 E–08	5,88 E–08	4,61 E–08	5,26 E–08	5,05 E–08	6,28 E–08	6,82 E–08	9,17 E–08	3,24 E–08
36 000	6,60 E–06	2,35 E–06	1,83 E–06	2,32 E–07	1,40 E–07	6,07 E–08	4,90 E–08	4,39 E–08	4,66 E–08	4,98 E–08	5,86 E–08	4,65 E–08	5,34 E–08	5,12 E–08	6,33 E–08	6,84 E–08	9,23 E–08	3,33 E–08
36 100	6,15 E–06	2,19 E–06	1,70 E–06	2,15 E–07	1,29 E–07	5,76 E–08	4,66 E–08	4,19 E–08	4,45 E–08	4,77 E–08	5,60 E–08	4,46 E–08	5,13 E–08	4,92 E–08	6,12 E–08	6,66 E–08	8,97 E–08	3,15 E–08
36 200	4,54 E–06	1,64 E–06	1,28 E–06	1,76 E–07	1,17 E–07	5,05 E–08	4,20 E–08	3,86 E–08	4,12 E–08	4,47 E–08	5,25 E–08	4,33 E–08	5,07 E–08	4,86 E–08	6,04 E–08	6,57 E–08	8,86 E–08	3,13 E–08
36 300	3,74 E–06	1,36 E–06	1,07 E–06	1,56 E–07	1,11 E–07	4,69 E–08	3,96 E–08	3,69 E–08	3,94 E–08	4,30 E–08	5,05 E–08	4,24 E–08	5,02 E–08	4,81 E–08	5,96 E–08	6,50 E–08	8,79 E–08	3,11 E–08
36 400	2,96 E–06	1,10 E–06	8,65 E–07	1,37 E–07	1,06 E–07	4,30 E–08	3,69 E–08	3,48 E–08	3,73 E–08	4,09 E–08	4,81 E–08	4,11 E–08	4,91 E–08	4,69 E–08	5,80 E–08	6,30 E–08	8,50 E–08	3,06 E–08
36 500	1,69 E–06	6,57 E–07	5,25 E–07	1,01 E–07	8,91 E–08	3,55 E–08	3,15 E–08	3,03 E–08	3,27 E–08	3,63 E–08	4,27 E–08	3,75 E–08	4,55 E–08	4,34 E–08	5,37 E–08	5,86 E–08	7,94 E–08	2,83 E–08
37 000	9,51 E–07	3,95 E–07	3,19 E–07	7,35 E–08	7,10 E–08	2,84 E–08	2,56 E–08	2,50 E–08	2,70 E–08	3,03 E–08	3,57 E–08	3,16 E–08	3,85 E–08	3,66 E–08	4,53 E–08	4,98 E–08	6,80 E–08	2,39 E–08
38 000	5,85 E–07	2,59 E–07	2,12 E–07	5,57 E–08	5,68 E–08	2,26 E–08	2,06 E–08	2,03 E–08	2,19 E–08	2,46 E–08	2,91 E–08	2,58 E–08	3,15 E–08	2,96 E–08	3,65 E–08	4,07 E–08	5,61 E–08	1,97 E–08
39 000	3,88 E–07	1,83 E–07	1,50 E–07	4,35 E–08	4,57 E–08	1,83 E–08	1,68 E–08	1,65 E–08	1,78 E–08	2,01 E–08	2,39 E–08	2,11 E–08	2,58 E–08	2,40 E–08	2,96 E–08	3,30 E–08	4,54 E–08	1,59 E–08

Таблица 5.8 — Плотность потока КО размером от 1,0 до 2,5 см относительно ИСК

Высота, км	Плотность потока, $м^{-2} \cdot год^{-1}$																	
	2,5°	7,5°	12,5°	17,5°	22,5°	27,5°	32,5°	37,5°	42,5°	47,5°	52,5°	57,5°	62,5°	67,5°	72,5°	77,5°	82,5°	87,5°
200	2,45 E–05	2,45 E–05	2,57 E–05	2,57 E–05	2,68 E–05	2,61 E–05	2,51 E–05	2,56 E–05	2,84 E–05	3,23 E–05	3,64 E–05	3,32 E–05	4,10 E–05	4,36 E–05	5,98 E–05	6,66 E–05	9,82 E–05	2,51 E–05
300	5,09 E–05	5,09 E–05	5,35 E–05	5,35 E–05	5,57 E–05	5,42 E–05	5,21 E–05	5,33 E–05	5,91 E–05	6,72 E–05	7,57 E–05	6,90 E–05	8,53 E–05	9,06 E–05	1,24 E–04	1,38 E–04	2,04 E–04	5,22 E–05
400	1,03 E–04	1,03 E–04	1,08 E–04	1,08 E–04	1,13 E–04	1,09 E–04	1,05 E–04	1,08 E–04	1,19 E–04	1,36 E–04	1,53 E–04	1,39 E–04	1,72 E–04	1,83 E–04	2,51 E–04	2,80 E–04	4,13 E–04	1,05 E–04

Продолжение таблицы 5.8

Высота, км	Плотность потока, $м^{-2} \cdot год^{-1}$																	
	2,5°	7,5°	12,5°	17,5°	22,5°	27,5°	32,5°	37,5°	42,5°	47,5°	52,5°	57,5°	62,5°	67,5°	72,5°	77,5°	82,5°	87,5°
500	1,49 E–04	1,49 E–04	1,56 E–04	1,56 E–04	1,63 E–04	1,58 E–04	1,52 E–04	1,56 E–04	1,73 E–04	1,97 E–04	2,21 E–04	2,02 E–04	2,49 E–04	2,65 E–04	3,63 E–04	4,05 E–04	5,97 E–04	1,53 E–04
600	1,70 E–04	1,70 E–04	1,79 E–04	1,79 E–04	1,86 E–04	1,81 E–04	1,74 E–04	1,78 E–04	1,98 E–04	2,25 E–04	2,53 E–04	2,31 E–04	2,85 E–04	3,03 E–04	4,15 E–04	4,63 E–04	6,83 E–04	1,74 E–04
700	2,15 E–04	2,15 E–04	2,26 E–04	2,26 E–04	2,36 E–04	2,29 E–04	2,20 E–04	2,26 E–04	2,50 E–04	2,84 E–04	3,20 E–04	2,92 E–04	3,61 E–04	3,83 E–04	5,26 E–04	5,86 E–04	8,64 E–04	2,21 E–04
800	1,97 E–04	1,97 E–04	2,04 E–04	2,04 E–04	2,12 E–04	2,11 E–04	2,08 E–04	2,17 E–04	2,39 E–04	2,67 E–04	2,97 E–04	3,15 E–04	3,96 E–04	4,16 E–04	5,34 E–04	7,06 E–04	9,60 E–04	2,37 E–04
900	1,34 E–04	1,34 E–04	1,38 E–04	1,38 E–04	1,43 E–04	1,44 E–04	1,44 E–04	1,51 E–04	1,65 E–04	1,84 E–04	2,03 E–04	2,27 E–04	2,87 E–04	3,00 E–04	3,77 E–04	5,25 E–04	6,97 E–04	1,70 E–04
1000	7,59 E–05	7,59 E–05	7,78 E–05	7,78 E–05	8,09 E–05	8,14 E–05	8,12 E–05	8,54 E–05	9,36 E–05	1,04 E–04	1,15 E–04	1,29 E–04	1,63 E–04	1,70 E–04	2,14 E–04	2,98 E–04	3,96 E–04	9,67 E–05
1100	4,43 E–05	4,43 E–05	4,55 E–05	4,55 E–05	4,72 E–05	4,75 E–05	4,73 E–05	4,97 E–05	5,45 E–05	6,05 E–05	6,70 E–05	7,46 E–05	9,42 E–05	9,85 E–05	1,24 E–04	1,72 E–04	2,29 E–04	5,60 E–05
1200	3,31 E–05	3,31 E–05	3,39 E–05	3,39 E–05	3,52 E–05	3,54 E–05	3,54 E–05	3,72 E–05	4,08 E–05	4,52 E–05	5,00 E–05	5,61 E–05	7,08 E–05	7,40 E–05	9,30 E–05	1,30 E–04	1,72 E–04	4,21 E–05
1300	3,34 E–05	3,34 E–05	3,43 E–05	3,43 E–05	3,52 E–05	3,49 E–05	3,55 E–05	3,76 E–05	4,14 E–05	4,67 E–05	5,21 E–05	5,62 E–05	6,98 E–05	7,56 E–05	1,05 E–04	1,10 E–04	1,16 E–04	2,41 E–05
1400	5,40 E–05	5,40 E–05	5,55 E–05	5,55 E–05	5,64 E–05	5,54 E–05	5,72 E–05	6,10 E–05	6,73 E–05	7,67 E–05	8,62 E–05	9,07 E–05	1,11 E–04	1,24 E–04	1,85 E–04	1,53 E–04	1,16 E–04	1,64 E–05
1500	2,97 E–05	2,97 E–05	3,05 E–05	3,05 E–05	3,11 E–05	3,05 E–05	3,15 E–05	3,35 E–05	3,70 E–05	4,21 E–05	4,74 E–05	4,97 E–05	6,08 E–05	6,76 E–05	1,01 E–04	8,41 E–05	6,51 E–05	9,55 E–06
1600	1,34 E–05	1,34 E–05	1,37 E–05	1,37 E–05	1,40 E–05	1,38 E–05	1,41 E–05	1,50 E–05	1,65 E–05	1,88 E–05	2,11 E–05	2,21 E–05	2,72 E–05	3,00 E–05	4,41 E–05	3,88 E–05	3,37 E–05	5,79 E–06
1700	7,88 E–06	7,88 E–06	8,11 E–06	8,11 E–06	8,29 E–06	8,16 E–06	8,32 E–06	8,81 E–06	9,72 E–06	1,10 E–05	1,24 E–05	1,29 E–05	1,59 E–05	1,75 E–05	2,55 E–05	2,32 E–05	2,16 E–05	4,00 E–06
1800	6,20 E–06	6,20 E–06	6,39 E–06	6,39 E–06	6,53 E–06	6,42 E–06	6,55 E–06	6,94 E–06	7,66 E–06	8,70 E–06	9,77 E–06	1,02 E–05	1,25 E–05	1,38 E–05	2,01 E–05	1,82 E–05	1,67 E–05	3,05 E–06
1900	4,65 E–06	4,65 E–06	4,78 E–06	4,78 E–06	4,89 E–06	4,81 E–06	4,90 E–06	5,19 E–06	5,73 E–06	6,51 E–06	7,31 E–06	7,61 E–06	9,36 E–06	1,03 E–05	1,50 E–05	1,36 E–05	1,25 E–05	2,30 E–06
2000	7,96 E–07	7,25 E–07	7,96 E–07	7,25 E–07	7,77 E–07	6,70 E–07	6,60 E–07	6,85 E–07	7,57 E–07	8,57 E–07	9,62 E–07	9,49 E–07	1,18 E–06	1,26 E–06	1,74 E–06	1,85 E–06	2,34 E–06	5,69 E–07
4000	4,17 E–07	4,04 E–07	3,83 E–07	2,16 E–07	2,70 E–07	1,04 E–07	9,92 E–08	1,01 E–07	1,11 E–07	1,25 E–07	1,41 E–07	1,38 E–07	1,73 E–07	1,79 E–07	2,25 E–07	2,46 E–07	3,47 E–07	1,19 E–07

Продолжение таблицы 5.8

Высота, км	Плотность потока, $м^{-2} \cdot год^{-1}$																	
	2,5°	7,5°	12,5°	17,5°	22,5°	27,5°	32,5°	37,5°	42,5°	47,5°	52,5°	57,5°	62,5°	67,5°	72,5°	77,5°	82,5°	87,5°
9000	1,40 E–07	1,31 E–07	1,21 E–07	6,51 E–08	8,04 E–08	3,16 E–08	2,99 E–08	3,03 E–08	3,30 E–08	3,72 E–08	4,20 E–08	4,06 E–08	5,10 E–08	5,24 E–08	6,58 E–08	7,25 E–08	1,04 E–07	3,51 E–08
18 000	1,25 E–07	1,12 E–07	1,01 E–07	5,79 E–08	6,80 E–08	3,17 E–08	3,07 E–08	3,18 E–08	3,45 E–08	3,93 E–08	4,63 E–08	4,93 E–08	7,04 E–08	3,56 E–08	4,11 E–08	4,49 E–08	6,39 E–08	2,28 E–08
19 000	5,16 E–07	3,68 E–07	3,02 E–07	2,45 E–07	2,41 E–07	2,00 E–07	2,01 E–07	2,17 E–07	2,33 E–07	2,70 E–07	3,35 E–07	3,92 E–07	6,25 E–07	7,31 E–08	4,38 E–08	4,77 E–08	6,77 E–08	2,46 E–08
19 100	5,77 E–07	4,07 E–07	3,32 E–07	2,74 E–07	2,67 E–07	2,27 E–07	2,28 E–07	2,46 E–07	2,64 E–07	3,06 E–07	3,81 E–07	4,47 E–07	7,14 E–07	7,82 E–08	4,30 E–08	4,68 E–08	6,64 E–08	2,42 E–08
19 200	3,27 E–07	2,45 E–07	2,05 E–07	1,55 E–07	1,58 E–07	1,19 E–07	1,19 E–07	1,27 E–07	1,37 E–07	1,59 E–07	1,96 E–07	2,27 E–07	3,58 E–07	5,41 E–08	4,10 E–08	4,46 E–08	6,33 E–08	2,31 E–08
19 300	1,93 E–07	1,56 E–07	1,36 E–07	9,06 E–08	9,83 E–08	6,10 E–08	6,04 E–08	6,41 E–08	6,90 E–08	7,95 E–08	9,68 E–08	1,10 E–07	1,69 E–07	4,07 E–08	3,93 E–08	4,28 E–08	6,07 E–08	2,22 E–08
19 400	1,36 E–07	1,17 E–07	1,05 E–07	6,33 E–08	7,23 E–08	3,74 E–08	3,66 E–08	3,84 E–08	4,14 E–08	4,74 E–08	5,68 E–08	6,26 E–08	9,30 E–08	3,37 E–08	3,65 E–08	3,97 E–08	5,63 E–08	2,06 E–08
19 600	1,23 E–07	1,09 E–07	9,82 E–08	5,75 E–08	6,69 E–08	3,22 E–08	3,13 E–08	3,27 E–08	3,53 E–08	4,04 E–08	4,80 E–08	5,23 E–08	7,65 E–08	3,20 E–08	3,55 E–08	3,86 E–08	5,46 E–08	2,02 E–08
19 800	1,43 E–07	1,22 E–07	1,09 E–07	6,70 E–08	7,57 E–08	4,06 E–08	3,99 E–08	4,20 E–08	4,53 E–08	5,19 E–08	6,25 E–08	6,96 E–08	1,05 E–07	3,37 E–08	3,54 E–08	3,85 E–08	5,45 E–08	2,02 E–08
20 000	1,62 E–07	1,29 E–07	1,14 E–07	6,80 E–08	7,61 E–08	3,94 E–08	3,81 E–08	3,94 E–08	4,36 E–08	5,15 E–08	6,83 E–08	5,31 E–08	6,70 E–08	3,05 E–08	3,44 E–08	3,74 E–08	5,28 E–08	1,97 E–08
20 100	1,56 E–07	1,24 E–07	1,09 E–07	6,32 E–08	7,16 E–08	3,46 E–08	3,32 E–08	3,39 E–08	3,80 E–08	4,53 E–08	6,21 E–08	4,05 E–08	4,43 E–08	2,86 E–08	3,38 E–08	3,66 E–08	5,17 E–08	1,94 E–08
20 200	1,22 E–07	1,04 E–07	9,33 E–08	5,18 E–08	6,07 E–08	2,61 E–08	2,50 E–08	2,54 E–08	2,82 E–08	3,31 E–08	4,34 E–08	3,17 E–08	3,66 E–08	2,71 E–08	3,23 E–08	3,50 E–08	4,95 E–08	1,86 E–08
20 300	1,11 E–07	9,71 E–08	8,78 E–08	4,77 E–08	5,69 E–08	2,31 E–08	2,21 E–08	2,24 E–08	2,48 E–08	2,89 E–08	3,69 E–08	2,85 E–08	3,37 E–08	2,64 E–08	3,17 E–08	3,44 E–08	4,85 E–08	1,83 E–08
20 400	1,46 E–07	1,17 E–07	1,03 E–07	5,84 E–08	6,67 E–08	3,08 E–08	2,94 E–08	2,98 E–08	3,35 E–08	4,01 E–08	5,55 E–08	3,36 E–08	3,37 E–08	2,66 E–08	3,20 E–08	3,46 E–08	4,88 E–08	1,85 E–08
20 600	1,13 E–07	9,69 E–08	8,74 E–08	4,73 E–08	5,62 E–08	2,28 E–08	2,17 E–08	2,20 E–08	2,44 E–08	2,87 E–08	3,77 E–08	2,64 E–08	2,90 E–08	2,49 E–08	3,00 E–08	3,25 E–08	4,57 E–08	1,74 E–08
20 800	1,06 E–07	9,30 E–08	8,42 E–08	4,50 E–08	5,40 E–08	2,10 E–08	2,00 E–08	2,02 E–08	2,24 E–08	2,62 E–08	3,41 E–08	2,46 E–08	2,74 E–08	2,41 E–08	2,91 E–08	3,14 E–08	4,42 E–08	1,70 E–08
21 000	1,11 E–07	9,58 E–08	8,64 E–08	4,65 E–08	5,53 E–08	2,21 E–08	2,10 E–08	2,12 E–08	2,36 E–08	2,78 E–08	3,69 E–08	2,50 E–08	2,69 E–08	2,37 E–08	2,84 E–08	3,07 E–08	4,31 E–08	1,68 E–08

Продолжение таблицы 5.8

Высота, км	Плотность потока, $м^{-2} \cdot год^{-1}$																	
	2,5°	7,5°	12,5°	17,5°	22,5°	27,5°	32,5°	37,5°	42,5°	47,5°	52,5°	57,5°	62,5°	67,5°	72,5°	77,5°	82,5°	87,5°
21 100	1,20 E–07	1,01 E–07	9,01 E–08	4,92 E–08	5,77 E–08	2,40 E–08	2,29 E–08	2,31 E–08	2,59 E–08	3,07 E–08	4,17 E–08	2,64 E–08	2,71 E–08	2,37 E–08	2,85 E–08	3,08 E–08	4,32 E–08	1,68 E–08
21 200	1,29 E–07	1,05 E–07	9,33 E–08	5,17 E–08	5,98 E–08	2,60 E–08	2,47 E–08	2,50 E–08	2,82 E–08	3,37 E–08	4,67 E–08	2,77 E–08	2,70 E–08	2,34 E–08	2,82 E–08	3,05 E–08	4,28 E–08	1,66 E–08
21 300	1,33 E–07	1,08 E–07	9,56 E–08	5,30 E–08	6,12 E–08	2,67 E–08	2,55 E–08	2,58 E–08	2,90 E–08	3,48 E–08	4,85 E–08	2,82 E–08	2,70 E–08	2,35 E–08	2,81 E–08	3,04 E–08	4,27 E–08	1,67 E–08
21 400	1,74 E–07	1,30 E–07	1,13 E–07	6,56 E–08	7,25 E–08	3,62 E–08	3,46 E–08	3,50 E–08	3,99 E–08	4,88 E–08	7,15 E–08	3,52 E–08	2,86 E–08	2,35 E–08	2,82 E–08	3,04 E–08	4,27 E–08	1,67 E–08
21 600	1,19 E–07	9,87 E–08	8,83 E–08	4,81 E–08	5,63 E–08	2,33 E–08	2,22 E–08	2,25 E–08	2,52 E–08	3,01 E–08	4,13 E–08	2,51 E–08	2,49 E–08	2,19 E–08	2,62 E–08	2,83 E–08	3,95 E–08	1,57 E–08
21 800	1,05 E–07	9,02 E–08	8,15 E–08	4,34 E–08	5,17 E–08	2,00 E–08	1,90 E–08	1,92 E–08	2,14 E–08	2,53 E–08	3,38 E–08	2,24 E–08	2,35 E–08	2,12 E–08	2,53 E–08	2,73 E–08	3,81 E–08	1,52 E–08
22 000	1,17 E–07	9,70 E–08	8,69 E–08	4,71 E–08	5,52 E–08	2,27 E–08	2,15 E–08	2,18 E–08	2,44 E–08	2,92 E–08	4,03 E–08	2,42 E–08	2,37 E–08	2,10 E–08	2,50 E–08	2,70 E–08	3,77 E–08	1,52 E–08
22 200	9,78 E–08	8,53 E–08	7,74 E–08	4,08 E–08	4,90 E–08	1,84 E–08	1,74 E–08	1,76 E–08	1,96 E–08	2,30 E–08	3,05 E–08	2,07 E–08	2,21 E–08	2,02 E–08	2,40 E–08	2,59 E–08	3,62 E–08	1,45 E–08
22 400	9,05 E–08	8,06 E–08	7,34 E–08	3,82 E–08	4,64 E–08	1,68 E–08	1,59 E–08	1,61 E–08	1,78 E–08	2,08 E–08	2,70 E–08	1,94 E–08	2,14 E–08	1,97 E–08	2,35 E–08	2,54 E–08	3,54 E–08	1,42 E–08
22 600	8,43 E–08	7,66 E–08	7,01 E–08	3,61 E–08	4,42 E–08	1,55 E–08	1,46 E–08	1,48 E–08	1,63 E–08	1,89 E–08	2,40 E–08	1,83 E–08	2,08 E–08	1,94 E–08	2,31 E–08	2,50 E–08	3,49 E–08	1,39 E–08
22 800	8,15 E–08	7,48 E–08	6,86 E–08	3,51 E–08	4,32 E–08	1,48 E–08	1,40 E–08	1,41 E–08	1,55 E–08	1,80 E–08	2,27 E–08	1,76 E–08	2,02 E–08	1,90 E–08	2,26 E–08	2,44 E–08	3,40 E–08	1,37 E–08
23 000	8,51 E–08	7,67 E–08	7,00 E–08	3,62 E–08	4,41 E–08	1,56 E–08	1,47 E–08	1,48 E–08	1,64 E–08	1,91 E–08	2,46 E–08	1,81 E–08	2,02 E–08	1,88 E–08	2,24 E–08	2,42 E–08	3,37 E–08	1,36 E–08
23 200	1,35 E–07	1,05 E–07	9,27 E–08	5,21 E–08	5,89 E–08	2,69 E–08	2,56 E–08	2,59 E–08	2,94 E–08	3,57 E–08	5,16 E–08	2,68 E–08	2,29 E–08	1,97 E–08	2,34 E–08	2,53 E–08	3,52 E–08	1,42 E–08
23 400	1,11 E–07	9,07 E–08	8,09 E–08	4,41 E–08	5,12 E–08	2,14 E–08	2,04 E–08	2,06 E–08	2,32 E–08	2,78 E–08	3,88 E–08	2,25 E–08	2,12 E–08	1,90 E–08	2,26 E–08	2,45 E–08	3,40 E–08	1,37 E–08
23 500	1,03 E–07	8,58 E–08	7,68 E–08	4,14 E–08	4,86 E–08	1,98 E–08	1,88 E–08	1,90 E–08	2,13 E–08	2,55 E–08	3,51 E–08	2,11 E–08	2,06 E–08	1,87 E–08	2,23 E–08	2,42 E–08	3,35 E–08	1,34 E–08
23 600	9,39 E–08	8,07 E–08	7,28 E–08	3,85 E–08	4,59 E–08	1,76 E–08	1,67 E–08	1,68 E–08	1,88 E–08	2,22 E–08	3,00 E–08	1,93 E–08	1,98 E–08	1,83 E–08	2,17 E–08	2,35 E–08	3,26 E–08	1,32 E–08
23 700	9,16 E–08	7,92 E–08	7,16 E–08	3,77 E–08	4,51 E–08	1,71 E–08	1,62 E–08	1,63 E–08	1,82 E–08	2,15 E–08	2,88 E–08	1,89 E–08	1,95 E–08	1,80 E–08	2,14 E–08	2,32 E–08	3,21 E–08	1,30 E–08

Продолжение таблицы 5.8

Высота, км	Плотность потока, $м^{-2} \cdot год^{-1}$																	
	2,5°	7,5°	12,5°	17,5°	22,5°	27,5°	32,5°	37,5°	42,5°	47,5°	52,5°	57,5°	62,5°	67,5°	72,5°	77,5°	82,5°	87,5°
23 800	8,86 E–08	7,72 E–08	6,99 E–08	3,67 E–08	4,40 E–08	1,64 E–08	1,56 E–08	1,57 E–08	1,75 E–08	2,06 E–08	2,75 E–08	1,83 E–08	1,92 E–08	1,78 E–08	2,12 E–08	2,29 E–08	3,18 E–08	1,29 E–08
24 000	1,41 E–07	8,21 E–08	7,14 E–08	2,61 E–08	3,09 E–08	9,72 E–09	9,04 E–09	9,01 E–09	9,77 E–09	1,10 E–08	1,29 E–08	1,19 E–08	1,47 E–08	1,43 E–08	1,71 E–08	1,83 E–08	2,51 E–08	1,01 E–08
30 000	1,33 E–07	7,13 E–08	6,09 E–08	2,03 E–08	2,33 E–08	7,60 E–09	7,04 E–09	7,00 E–09	7,57 E–09	8,51 E–09	9,90 E–09	9,27 E–09	1,15 E–08	1,12 E–08	1,36 E–08	1,43 E–08	1,91 E–08	7,50 E–09
31 000	1,54 E–07	7,65 E–08	6,45 E–08	1,97 E–08	2,19 E–08	7,34 E–09	6,77 E–09	6,72 E–09	7,26 E–09	8,15 E–09	9,48 E–09	8,84 E–09	1,10 E–08	1,06 E–08	1,30 E–08	1,36 E–08	1,82 E–08	7,04 E–09
32 000	1,51 E–07	7,28 E–08	6,09 E–08	1,80 E–08	1,97 E–08	6,80 E–09	6,26 E–09	6,20 E–09	6,71 E–09	7,53 E–09	8,77 E–09	8,13 E–09	1,01 E–08	9,71 E–09	1,19 E–08	1,26 E–08	1,68 E–08	6,40 E–09
33 000	2,02 E–07	8,86 E–08	7,27 E–08	1,82 E–08	1,87 E–08	6,70 E–09	6,10 E–09	6,00 E–09	6,48 E–09	7,25 E–09	8,46 E–09	7,74 E–09	9,52 E–09	9,18 E–09	1,13 E–08	1,20 E–08	1,61 E–08	6,03 E–09
34 000	2,32 E–07	9,59 E–08	7,76 E–08	1,73 E–08	1,66 E–08	6,40 E–09	5,78 E–09	5,65 E–09	6,11 E–09	6,82 E–09	7,97 E–09	7,19 E–09	8,79 E–09	8,49 E–09	1,05 E–08	1,13 E–08	1,52 E–08	5,46 E–09
35 000	2,99 E–07	1,19 E–07	9,51 E–08	1,86 E–08	1,68 E–08	6,42 E–09	5,70 E–09	5,50 E–09	5,92 E–09	6,58 E–09	7,71 E–09	6,84 E–09	8,32 E–09	7,99 E–09	9,86 E–09	1,06 E–08	1,43 E–08	5,23 E–09
35 500	4,20 E–07	1,59 E–07	1,26 E–07	2,09 E–08	1,67 E–08	6,79 E–09	5,90 E–09	5,60 E–09	6,01 E–09	6,63 E–09	7,77 E–09	6,72 E–09	8,07 E–09	7,76 E–09	9,63 E–09	1,04 E–08	1,40 E–08	5,01 E–09
35 600	5,57 E–07	2,06 E–07	1,62 E–07	2,44 E–08	1,79 E–08	7,42 E–09	6,32 E–09	5,91 E–09	6,33 E–09	6,92 E–09	8,11 E–09	6,89 E–09	8,19 E–09	7,87 E–09	9,75 E–09	1,06 E–08	1,43 E–08	5,11 E–09
35 700	7,17 E–07	2,61 E–07	2,04 E–07	2,83 E–08	1,91 E–08	8,01 E–09	6,66 E–09	6,12 E–09	6,53 E–09	7,08 E–09	8,31 E–09	6,87 E–09	8,07 E–09	7,74 E–09	9,56 E–09	1,03 E–08	1,40 E–08	5,05 E–09
35 710	8,03 E–07	2,90 E–07	2,27 E–07	3,06 E–08	2,01 E–08	8,45 E–09	6,98 E–09	6,38 E–09	6,80 E–09	7,35 E–09	8,62 E–09	7,07 E–09	8,25 E–09	7,94 E–09	9,81 E–09	1,06 E–08	1,42 E–08	5,16 E–09
35 720	8,65 E–07	3,11 E–07	2,43 E–07	3,18 E–08	2,01 E–08	8,62 E–09	7,05 E–09	6,39 E–09	6,79 E–09	7,31 E–09	8,58 E–09	6,94 E–09	8,05 E–09	7,72 E–09	9,55 E–09	1,04 E–08	1,40 E–08	5,04 E–09
35 730	9,79 E–07	3,50 E–07	2,73 E–07	3,47 E–08	2,11 E–08	9,17 E–09	7,42 E–09	6,66 E–09	7,07 E–09	7,57 E–09	8,89 E–09	7,09 E–09	8,16 E–09	7,85 E–09	9,72 E–09	1,05 E–08	1,41 E–08	5,07 E–09
35 740	1,30 E–06	4,59 E–07	3,57 E–07	4,24 E–08	2,33 E–08	1,04 E–08	8,21 E–09	7,18 E–09	7,58 E–09	8,01 E–09	9,41 E–09	7,19 E–09	8,08 E–09	7,75 E–09	9,58 E–09	1,04 E–08	1,39 E–08	5,02 E–09
35 750	1,71 E–06	6,00 E–07	4,66 E–07	5,28 E–08	2,69 E–08	1,23 E–08	9,46 E–09	8,10 E–09	8,51 E–09	8,87 E–09	1,04 E–08	7,63 E–09	8,36 E–09	8,03 E–09	9,92 E–09	1,07 E–08	1,45 E–08	5,25 E–09
35 760	2,91 E–06	1,01 E–06	7,84 E–07	8,21 E–08	3,57 E–08	1,73 E–08	1,26 E–08	1,02 E–08	1,06 E–08	1,07 E–08	1,26 E–08	8,20 E–09	8,27 E–09	7,93 E–09	9,79 E–09	1,06 E–08	1,42 E–08	5,17 E–09

Продолжение таблицы 5.8

Высота, км	Плотность потока, $м^{-2} \cdot год^{-1}$																	
	2,5°	7,5°	12,5°	17,5°	22,5°	27,5°	32,5°	37,5°	42,5°	47,5°	52,5°	57,5°	62,5°	67,5°	72,5°	77,5°	82,5°	87,5°
35 770	5,83 E–06	2,01 E–06	1,55 E–06	1,53 E–07	5,64 E–08	2,94 E–08	2,03 E–08	1,55 E–08	1,59 E–08	1,53 E–08	1,80 E–08	9,66 E–09	8,16 E–09	7,84 E–09	9,72 E–09	1,05 E–08	1,42 E–08	5,07 E–09
35 780	6,09 E–06	2,10 E–06	1,62 E–06	1,60 E–07	5,89 E–08	3,06 E–08	2,11 E–08	1,61 E–08	1,64 E–08	1,58 E–08	1,87 E–08	9,94 E–09	8,35 E–09	8,02 E–09	9,90 E–09	1,07 E–08	1,45 E–08	5,25 E–09
35 790	4,59 E–06	1,59 E–06	1,23 E–06	1,22 E–07	4,72 E–08	2,42 E–08	1,70 E–08	1,32 E–08	1,36 E–08	1,33 E–08	1,57 E–08	8,98 E–09	8,14 E–09	7,82 E–09	9,71 E–09	1,05 E–08	1,42 E–08	5,03 E–09
35 800	3,49 E–06	1,21 E–06	9,35 E–07	9,60 E–08	3,96 E–08	1,97 E–08	1,41 E–08	1,13 E–08	1,17 E–08	1,16 E–08	1,37 E–08	8,47 E–09	8,23 E–09	7,90 E–09	9,77 E–09	1,06 E–08	1,43 E–08	5,15 E–09
35 810	2,96 E–06	1,03 E–06	7,96 E–07	8,34 E–08	3,62 E–08	1,75 E–08	1,28 E–08	1,04 E–08	1,08 E–08	1,08 E–08	1,28 E–08	8,28 E–09	8,35 E–09	8,01 E–09	9,87 E–09	1,07 E–08	1,44 E–08	5,26 E–09
35 820	2,48 E–06	8,64 E–07	6,69 E–07	7,12 E–08	3,18 E–08	1,54 E–08	1,14 E–08	9,36 E–09	9,75 E–09	9,92 E–09	1,17 E–08	7,84 E–09	8,10 E–09	7,76 E–09	9,63 E–09	1,04 E–08	1,40 E–08	5,01 E–09
35 830	2,15 E–06	7,51 E–07	5,83 E–07	6,36 E–08	3,02 E–08	1,41 E–08	1,06 E–08	8,84 E–09	9,24 E–09	9,48 E–09	1,12 E–08	7,79 E–09	8,26 E–09	7,93 E–09	9,78 E–09	1,06 E–08	1,42 E–08	5,18 E–09
35 840	1,91 E–06	6,67 E–07	5,18 E–07	5,76 E–08	2,83 E–08	1,30 E–08	9,88 E–09	8,34 E–09	8,74 E–09	9,04 E–09	1,06 E–08	7,59 E–09	8,18 E–09	7,84 E–09	9,64 E–09	1,05 E–08	1,41 E–08	5,16 E–09
35 850	1,68 E–06	5,87 E–07	4,56 E–07	5,16 E–08	2,61 E–08	1,21 E–08	9,28 E–09	7,95 E–09	8,36 E–09	8,71 E–09	1,02 E–08	7,50 E–09	8,22 E–09	7,90 E–09	9,78 E–09	1,06 E–08	1,43 E–08	5,12 E–09
35 860	1,53 E–06	5,37 E–07	4,17 E–07	4,80 E–08	2,50 E–08	1,14 E–08	8,85 E–09	7,63 E–09	8,03 E–09	8,41 E–09	9,88 E–09	7,35 E–09	8,12 E–09	7,80 E–09	9,63 E–09	1,05 E–08	1,41 E–08	5,08 E–09
35 870	1,38 E–06	4,88 E–07	3,80 E–07	4,52 E–08	2,51 E–08	1,10 E–08	8,65 E–09	7,56 E–09	7,98 E–09	8,41 E–09	9,88 E–09	7,55 E–09	8,49 E–09	8,15 E–09	1,00 E–08	1,08 E–08	1,46 E–08	5,38 E–09
35 880	1,31 E–06	4,62 E–07	3,60 E–07	4,24 E–08	2,30 E–08	1,05 E–08	8,23 E–09	7,20 E–09	7,60 E–09	8,02 E–09	9,42 E–09	7,17 E–09	8,04 E–09	7,72 E–09	9,58 E–09	1,04 E–08	1,41 E–08	4,98 E–09
35 890	1,30 E–06	4,57 E–07	3,56 E–07	4,23 E–08	2,34 E–08	1,04 E–08	8,14 E–09	7,12 E–09	7,52 E–09	7,93 E–09	9,32 E–09	7,11 E–09	7,98 E–09	7,65 E–09	9,43 E–09	1,02 E–08	1,37 E–08	5,00 E–09
35 900	1,04 E–06	3,68 E–07	2,87 E–07	3,53 E–08	2,05 E–08	9,17 E–09	7,35 E–09	6,54 E–09	6,93 E–09	7,39 E–09	8,69 E–09	6,82 E–09	7,78 E–09	7,47 E–09	9,28 E–09	1,01 E–08	1,36 E–08	4,78 E–09
36 000	9,76 E–07	3,47 E–07	2,71 E–07	3,43 E–08	2,07 E–08	8,98 E–09	7,25 E–09	6,49 E–09	6,89 E–09	7,37 E–09	8,66 E–09	6,87 E–09	7,89 E–09	7,57 E–09	9,35 E–09	1,01 E–08	1,36 E–08	4,93 E–09
36 100	9,09 E–07	3,23 E–07	2,52 E–07	3,18 E–08	1,91 E–08	8,51 E–09	6,89 E–09	6,19 E–09	6,58 E–09	7,05 E–09	8,28 E–09	6,59 E–09	7,58 E–09	7,27 E–09	9,04 E–09	9,84 E–09	1,33 E–08	4,65 E–09
36 200	6,70 E–07	2,42 E–07	1,89 E–07	2,60 E–08	1,73 E–08	7,47 E–09	6,21 E–09	5,71 E–09	6,09 E–09	6,61 E–09	7,76 E–09	6,40 E–09	7,49 E–09	7,18 E–09	8,92 E–09	9,71 E–09	1,31 E–08	4,63 E–09

Окончание таблицы 5.8

Высота, км	Плотность потока, $м^{-2} \cdot год^{-1}$																	
	2,5°	7,5°	12,5°	17,5°	22,5°	27,5°	32,5°	37,5°	42,5°	47,5°	52,5°	57,5°	62,5°	67,5°	72,5°	77,5°	82,5°	87,5°
36 300	5,52 E–07	2,01 E–07	1,58 E–07	2,30 E–08	1,64 E–08	6,93 E–09	5,86 E–09	5,45 E–09	5,83 E–09	6,36 E–09	7,47 E–09	6,27 E–09	7,41 E–09	7,10 E–09	8,82 E–09	9,61 E–09	1,30 E–08	4,59 E–09
36 400	4,37 E–07	1,62 E–07	1,28 E–07	2,03 E–08	1,56 E–08	6,35 E–09	5,46 E–09	5,14 E–09	5,51 E–09	6,05 E–09	7,11 E–09	6,08 E–09	7,26 E–09	6,94 E–09	8,58 E–09	9,32 E–09	1,26 E–08	4,52 E–09
36 500	2,49 E–07	9,72 E–08	7,76 E–08	1,49 E–08	1,32 E–08	5,25 E–09	4,65 E–09	4,49 E–09	4,83 E–09	5,37 E–09	6,31 E–09	5,55 E–09	6,72 E–09	6,42 E–09	7,94 E–09	8,67 E–09	1,17 E–08	4,18 E–09
37 000	1,41 E–07	5,83 E–08	4,71 E–08	1,09 E–08	1,05 E–08	4,19 E–09	3,79 E–09	3,70 E–09	3,99 E–09	4,48 E–09	5,27 E–09	4,68 E–09	5,70 E–09	5,41 E–09	6,69 E–09	7,37 E–09	1,00 E–08	3,53 E–09
38 000	8,64 E–08	3,83 E–08	3,13 E–08	8,24 E–09	8,39 E–09	3,34 E–09	3,05 E–09	2,99 E–09	3,23 E–09	3,64 E–09	4,30 E–09	3,82 E–09	4,66 E–09	4,38 E–09	5,40 E–09	6,02 E–09	8,29 E–09	2,91 E–09
39 000	5,74 E–08	2,70 E–08	2,22 E–08	6,44 E–09	6,75 E–09	2,71 E–09	2,48 E–09	2,44 E–09	2,63 E–09	2,97 E–09	3,53 E–09	3,12 E–09	3,81 E–09	3,54 E–09	4,37 E–09	4,89 E–09	6,72 E–09	2,35 E–09

Таблица 5.9 — Плотность потока КО размером от 2,5 до 5,0 см относительно ИСК

Высота, км	Плотность потока, $м^{-2} \cdot год^{-1}$																	
	2,5°	7,5°	12,5°	17,5°	22,5°	27,5°	32,5°	37,5°	42,5°	47,5°	52,5°	57,5°	62,5°	67,5°	72,5°	77,5°	82,5°	87,5°
200	4,61 E–06	4,61 E–06	4,84 E–06	4,84 E–06	5,04 E–06	4,90 E–06	4,72 E–06	4,83 E–06	5,35 E–06	6,09 E–06	6,85 E–06	6,25 E–06	7,72 E–06	8,20 E–06	1,13 E–05	1,25 E–05	1,85 E–05	4,73 E–06
300	9,58 E–06	9,58 E–06	1,01 E–05	1,01 E–05	1,05 E–05	1,02 E–05	9,80 E–06	1,00 E–05	1,11 E–05	1,27 E–05	1,42 E–05	1,30 E–05	1,61 E–05	1,70 E–05	2,34 E–05	2,61 E–05	3,84 E–05	9,82 E–06
400	1,94 E–05	1,94 E–05	2,03 E–05	2,03 E–05	2,12 E–05	2,06 E–05	1,98 E–05	2,03 E–05	2,25 E–05	2,56 E–05	2,88 E–05	2,63 E–05	3,24 E–05	3,45 E–05	4,73 E–05	5,27 E–05	7,77 E–05	1,99 E–05
500	2,80 E–05	2,80 E–05	2,94 E–05	2,94 E–05	3,06 E–05	2,98 E–05	2,87 E–05	2,93 E–05	3,25 E–05	3,70 E–05	4,17 E–05	3,80 E–05	4,69 E–05	4,99 E–05	6,84 E–05	7,62 E–05	1,12 E–04	2,87 E–05
600	3,20 E–05	3,20 E–05	3,36 E–05	3,36 E–05	3,50 E–05	3,41 E–05	3,28 E–05	3,35 E–05	3,72 E–05	4,23 E–05	4,76 E–05	4,34 E–05	5,36 E–05	5,70 E–05	7,82 E–05	8,71 E–05	1,28 E–04	3,28 E–05
700	4,05 E–05	4,05 E–05	4,26 E–05	4,26 E–05	4,43 E–05	4,31 E–05	4,15 E–05	4,25 E–05	4,71 E–05	5,35 E–05	6,03 E–05	5,50 E–05	6,79 E–05	7,21 E–05	9,90 E–05	1,10 E–04	1,63 E–04	4,16 E–05
800	3,71 E–05	3,71 E–05	3,83 E–05	3,83 E–05	3,98 E–05	3,97 E–05	3,92 E–05	4,09 E–05	4,50 E–05	5,03 E–05	5,59 E–05	5,94 E–05	7,46 E–05	7,83 E–05	1,00 E–04	1,33 E–04	1,81 E–04	4,46 E–05
900	2,53 E–05	2,53 E–05	2,59 E–05	2,59 E–05	2,70 E–05	2,71 E–05	2,70 E–05	2,84 E–05	3,11 E–05	3,46 E–05	3,82 E–05	4,28 E–05	5,40 E–05	5,65 E–05	7,10 E–05	9,87 E–05	1,31 E–04	3,21 E–05

Продолжение таблицы 5.9

Высота, км	Плотность потока, $м^{-2} \cdot год^{-1}$																	
	2,5°	7,5°	12,5°	17,5°	22,5°	27,5°	32,5°	37,5°	42,5°	47,5°	52,5°	57,5°	62,5°	67,5°	72,5°	77,5°	82,5°	87,5°
1000	1,43 E–05	1,43 E–05	1,47 E–05	1,47 E–05	1,52 E–05	1,53 E–05	1,53 E–05	1,61 E–05	1,76 E–05	1,96 E–05	2,16 E–05	2,42 E–05	3,06 E–05	3,20 E–05	4,02 E–05	5,61 E–05	7,45 E–05	1,82 E–05
1100	8,33 E–06	8,33 E–06	8,56 E–06	8,56 E–06	8,89 E–06	8,93 E–06	8,90 E–06	9,35 E–06	1,03 E–05	1,14 E–05	1,26 E–05	1,40 E–05	1,77 E–05	1,85 E–05	2,33 E–05	3,24 E–05	4,31 E–05	1,05 E–05
1200	6,22 E–06	6,22 E–06	6,38 E–06	6,38 E–06	6,63 E–06	6,67 E–06	6,66 E–06	7,00 E–06	7,67 E–06	8,52 E–06	9,42 E–06	1,06 E–05	1,33 E–05	1,39 E–05	1,75 E–05	2,44 E–05	3,24 E–05	7,92 E–06
1300	6,28 E–06	6,28 E–06	6,45 E–06	6,45 E–06	6,62 E–06	6,57 E–06	6,68 E–06	7,08 E–06	7,79 E–06	8,78 E–06	9,81 E–06	1,06 E–05	1,31 E–05	1,42 E–05	1,98 E–05	2,07 E–05	2,18 E–05	4,53 E–06
1400	1,02 E–05	1,02 E–05	1,04 E–05	1,04 E–05	1,06 E–05	1,04 E–05	1,08 E–05	1,15 E–05	1,27 E–05	1,44 E–05	1,62 E–05	1,71 E–05	2,09 E–05	2,33 E–05	3,48 E–05	2,88 E–05	2,18 E–05	3,09 E–06
1500	5,60 E–06	5,60 E–06	5,75 E–06	5,75 E–06	5,85 E–06	5,74 E–06	5,92 E–06	6,30 E–06	6,96 E–06	7,93 E–06	8,92 E–06	9,35 E–06	1,15 E–05	1,27 E–05	1,90 E–05	1,58 E–05	1,23 E–05	1,80 E–06
1600	2,51 E–06	2,51 E–06	2,59 E–06	2,59 E–06	2,64 E–06	2,60 E–06	2,66 E–06	2,82 E–06	3,11 E–06	3,54 E–06	3,98 E–06	4,16 E–06	5,11 E–06	5,64 E–06	8,30 E–06	7,30 E–06	6,35 E–06	1,09 E–06
1700	1,48 E–06	1,48 E–06	1,53 E–06	1,53 E–06	1,56 E–06	1,54 E–06	1,57 E–06	1,66 E–06	1,83 E–06	2,08 E–06	2,33 E–06	2,43 E–06	3,00 E–06	3,29 E–06	4,79 E–06	4,37 E–06	4,07 E–06	7,54 E–07
1800	1,17 E–06	1,17 E–06	1,20 E–06	1,20 E–06	1,23 E–06	1,21 E–06	1,23 E–06	1,31 E–06	1,44 E–06	1,64 E–06	1,84 E–06	1,92 E–06	2,36 E–06	2,59 E–06	3,79 E–06	3,42 E–06	3,14 E–06	5,74 E–07
1900	8,74 E–07	8,74 E–07	9,01 E–07	9,01 E–07	9,21 E–07	9,05 E–07	9,23 E–07	9,77 E–07	1,08 E–06	1,23 E–06	1,38 E–06	1,43 E–06	1,76 E–06	1,94 E–06	2,83 E–06	2,56 E–06	2,35 E–06	4,32 E–07
2000	1,50 E–07	1,36 E–07	1,50 E–07	1,36 E–07	1,46 E–07	1,26 E–07	1,24 E–07	1,29 E–07	1,42 E–07	1,61 E–07	1,81 E–07	1,79 E–07	2,21 E–07	2,37 E–07	3,27 E–07	3,48 E–07	4,40 E–07	1,07 E–07
4000	7,85 E–08	7,60 E–08	7,21 E–08	4,06 E–08	5,09 E–08	1,95 E–08	1,87 E–08	1,91 E–08	2,09 E–08	2,36 E–08	2,66 E–08	2,60 E–08	3,26 E–08	3,37 E–08	4,23 E–08	4,63 E–08	6,53 E–08	2,23 E–08
9000	2,63 E–08	2,47 E–08	2,27 E–08	1,23 E–08	1,51 E–08	5,95 E–09	5,63 E–09	5,70 E–09	6,22 E–09	7,00 E–09	7,91 E–09	7,64 E–09	9,59 E–09	9,85 E–09	1,24 E–08	1,37 E–08	1,95 E–08	6,61 E–09
18 000	2,35 E–08	2,11 E–08	1,89 E–08	1,09 E–08	1,28 E–08	5,97 E–09	5,78 E–09	5,99 E–09	6,49 E–09	7,39 E–09	8,71 E–09	9,27 E–09	1,33 E–08	6,70 E–09	7,74 E–09	8,45 E–09	1,20 E–08	4,29 E–09
19 000	9,72 E–08	6,93 E–08	5,69 E–08	4,61 E–08	4,54 E–08	3,77 E–08	3,79 E–08	4,08 E–08	4,38 E–08	5,08 E–08	6,30 E–08	7,39 E–08	1,18 E–07	1,38 E–08	8,24 E–09	8,97 E–09	1,27 E–08	4,62 E–09
19 100	1,09 E–07	7,66 E–08	6,25 E–08	5,15 E–08	5,03 E–08	4,27 E–08	4,29 E–08	4,63 E–08	4,97 E–08	5,77 E–08	7,16 E–08	8,42 E–08	1,34 E–07	1,47 E–08	8,09 E–09	8,80 E–09	1,25 E–08	4,55 E–09
19 200	6,16 E–08	4,60 E–08	3,86 E–08	2,91 E–08	2,97 E–08	2,24 E–08	2,24 E–08	2,40 E–08	2,58 E–08	2,99 E–08	3,68 E–08	4,28 E–08	6,75 E–08	1,02 E–08	7,71 E–09	8,39 E–09	1,19 E–08	4,35 E–09

Продолжение таблицы 5.9

Высота, км	Плотность потока, $м^{-2} \cdot год^{-1}$																	
	2,5°	7,5°	12,5°	17,5°	22,5°	27,5°	32,5°	37,5°	42,5°	47,5°	52,5°	57,5°	62,5°	67,5°	72,5°	77,5°	82,5°	87,5°
19 300	3,63 E–08	2,94 E–08	2,55 E–08	1,70 E–08	1,85 E–08	1,15 E–08	1,14 E–08	1,21 E–08	1,30 E–08	1,50 E–08	1,82 E–08	2,07 E–08	3,18 E–08	7,66 E–09	7,40 E–09	8,06 E–09	1,14 E–08	4,18 E–09
19 400	2,55 E–08	2,21 E–08	1,97 E–08	1,19 E–08	1,36 E–08	7,04 E–09	6,89 E–09	7,22 E–09	7,80 E–09	8,93 E–09	1,07 E–08	1,18 E–08	1,75 E–08	6,35 E–09	6,87 E–09	7,48 E–09	1,06 E–08	3,88 E–09
19 600	2,32 E–08	2,06 E–08	1,85 E–08	1,08 E–08	1,26 E–08	6,05 E–09	5,90 E–09	6,15 E–09	6,65 E–09	7,60 E–09	9,04 E–09	9,84 E–09	1,44 E–08	6,02 E–09	6,68 E–09	7,26 E–09	1,03 E–08	3,80 E–09
19 800	2,70 E–08	2,31 E–08	2,04 E–08	1,26 E–08	1,42 E–08	7,65 E–09	7,51 E–09	7,90 E–09	8,52 E–09	9,78 E–09	1,18 E–08	1,31 E–08	1,97 E–08	6,35 E–09	6,67 E–09	7,24 E–09	1,03 E–08	3,80 E–09
20 000	3,05 E–08	2,44 E–08	2,14 E–08	1,28 E–08	1,43 E–08	7,41 E–09	7,17 E–09	7,41 E–09	8,20 E–09	9,69 E–09	1,29 E–08	1,00 E–08	1,26 E–08	5,74 E–09	6,48 E–09	7,04 E–09	9,95 E–09	3,71 E–09
20 100	2,94 E–08	2,33 E–08	2,06 E–08	1,19 E–08	1,35 E–08	6,52 E–09	6,25 E–09	6,38 E–09	7,14 E–09	8,53 E–09	1,17 E–08	7,62 E–09	8,33 E–09	5,38 E–09	6,35 E–09	6,89 E–09	9,74 E–09	3,65 E–09
20 200	2,30 E–08	1,96 E–08	1,76 E–08	9,74 E–09	1,14 E–08	4,92 E–09	4,70 E–09	4,79 E–09	5,31 E–09	6,24 E–09	8,17 E–09	5,97 E–09	6,90 E–09	5,09 E–09	6,08 E–09	6,60 E–09	9,31 E–09	3,50 E–09
20 300	2,08 E–08	1,83 E–08	1,65 E–08	8,98 E–09	1,07 E–08	4,36 E–09	4,15 E–09	4,22 E–09	4,66 E–09	5,44 E–09	6,95 E–09	5,37 E–09	6,35 E–09	4,97 E–09	5,97 E–09	6,47 E–09	9,13 E–09	3,44 E–09
20 400	2,74 E–08	2,19 E–08	1,94 E–08	1,10 E–08	1,26 E–08	5,79 E–09	5,53 E–09	5,61 E–09	6,31 E–09	7,55 E–09	1,05 E–08	6,32 E–09	6,34 E–09	5,00 E–09	6,02 E–09	6,52 E–09	9,19 E–09	3,48 E–09
20 600	2,12 E–08	1,82 E–08	1,64 E–08	8,91 E–09	1,06 E–08	4,29 E–09	4,08 E–09	4,14 E–09	4,60 E–09	5,40 E–09	7,10 E–09	4,97 E–09	5,47 E–09	4,69 E–09	5,65 E–09	6,11 E–09	8,60 E–09	3,28 E–09
20 800	2,00 E–08	1,75 E–08	1,59 E–08	8,48 E–09	1,02 E–08	3,96 E–09	3,76 E–09	3,81 E–09	4,22 E–09	4,94 E–09	6,41 E–09	4,62 E–09	5,15 E–09	4,55 E–09	5,47 E–09	5,92 E–09	8,32 E–09	3,21 E–09
21 000	2,10 E–08	1,80 E–08	1,63 E–08	8,76 E–09	1,04 E–08	4,15 E–09	3,94 E–09	3,99 E–09	4,45 E–09	5,24 E–09	6,95 E–09	4,71 E–09	5,06 E–09	4,45 E–09	5,35 E–09	5,78 E–09	8,12 E–09	3,16 E–09
21 100	2,26 E–08	1,89 E–08	1,70 E–08	9,26 E–09	1,09 E–08	4,53 E–09	4,30 E–09	4,35 E–09	4,87 E–09	5,79 E–09	7,85 E–09	4,97 E–09	5,09 E–09	4,46 E–09	5,36 E–09	5,79 E–09	8,14 E–09	3,16 E–09
21 200	2,42 E–08	1,97 E–08	1,76 E–08	9,72 E–09	1,12 E–08	4,89 E–09	4,66 E–09	4,72 E–09	5,30 E–09	6,34 E–09	8,78 E–09	5,22 E–09	5,09 E–09	4,41 E–09	5,31 E–09	5,74 E–09	8,05 E–09	3,13 E–09
21 300	2,50 E–08	2,02 E–08	1,80 E–08	9,98 E–09	1,15 E–08	5,03 E–09	4,79 E–09	4,85 E–09	5,46 E–09	6,55 E–09	9,13 E–09	5,32 E–09	5,09 E–09	4,41 E–09	5,30 E–09	5,72 E–09	8,03 E–09	3,14 E–09
21 400	3,28 E–08	2,45 E–08	2,12 E–08	1,24 E–08	1,36 E–08	6,82 E–09	6,51 E–09	6,60 E–09	7,51 E–09	9,18 E–09	1,35 E–08	6,63 E–09	5,39 E–09	4,42 E–09	5,30 E–09	5,73 E–09	8,03 E–09	3,14 E–09
21 600	2,24 E–08	1,86 E–08	1,66 E–08	9,06 E–09	1,06 E–08	4,39 E–09	4,18 E–09	4,23 E–09	4,74 E–09	5,66 E–09	7,78 E–09	4,73 E–09	4,68 E–09	4,12 E–09	4,93 E–09	5,32 E–09	7,44 E–09	2,95 E–09

Продолжение таблицы 5.9

Высота, км	Плотность потока, $м^{-2} \cdot год^{-1}$																	
	2,5°	7,5°	12,5°	17,5°	22,5°	27,5°	32,5°	37,5°	42,5°	47,5°	52,5°	57,5°	62,5°	67,5°	72,5°	77,5°	82,5°	87,5°
21 800	1,97 E–08	1,70 E–08	1,53 E–08	8,17 E–09	9,74 E–09	3,77 E–09	3,58 E–09	3,62 E–09	4,03 E–09	4,76 E–09	6,36 E–09	4,21 E–09	4,42 E–09	3,98 E–09	4,75 E–09	5,13 E–09	7,17 E–09	2,86 E–09
22 000	2,20 E–08	1,83 E–08	1,64 E–08	8,87 E–09	1,04 E–08	4,26 E–09	4,05 E–09	4,10 E–09	4,60 E–09	5,49 E–09	7,58 E–09	4,56 E–09	4,47 E–09	3,96 E–09	4,71 E–09	5,08 E–09	7,09 E–09	2,85 E–09
22 200	1,84 E–08	1,61 E–08	1,46 E–08	7,68 E–09	9,22 E–09	3,46 E–09	3,28 E–09	3,31 E–09	3,68 E–09	4,33 E–09	5,74 E–09	3,90 E–09	4,17 E–09	3,80 E–09	4,52 E–09	4,88 E–09	6,81 E–09	2,74 E–09
22 400	1,70 E–08	1,52 E–08	1,38 E–08	7,20 E–09	8,73 E–09	3,16 E–09	2,99 E–09	3,02 E–09	3,35 E–09	3,91 E–09	5,08 E–09	3,65 E–09	4,03 E–09	3,71 E–09	4,42 E–09	4,78 E–09	6,66 E–09	2,67 E–09
22 600	1,59 E–08	1,44 E–08	1,32 E–08	6,80 E–09	8,32 E–09	2,91 E–09	2,75 E–09	2,78 E–09	3,06 E–09	3,56 E–09	4,52 E–09	3,44 E–09	3,91 E–09	3,65 E–09	4,35 E–09	4,71 E–09	6,56 E–09	2,62 E–09
22 800	1,53 E–08	1,41 E–08	1,29 E–08	6,61 E–09	8,13 E–09	2,78 E–09	2,63 E–09	2,65 E–09	2,92 E–09	3,38 E–09	4,26 E–09	3,32 E–09	3,81 E–09	3,57 E–09	4,25 E–09	4,60 E–09	6,40 E–09	2,57 E–09
23 000	1,60 E–08	1,44 E–08	1,32 E–08	6,81 E–09	8,30 E–09	2,93 E–09	2,77 E–09	2,79 E–09	3,09 E–09	3,60 E–09	4,63 E–09	3,41 E–09	3,80 E–09	3,54 E–09	4,21 E–09	4,56 E–09	6,34 E–09	2,56 E–09
23 200	2,55 E–08	1,98 E–08	1,74 E–08	9,80 E–09	1,11 E–08	5,06 E–09	4,82 E–09	4,88 E–09	5,54 E–09	6,72 E–09	9,71 E–09	5,04 E–09	4,31 E–09	3,71 E–09	4,40 E–09	4,77 E–09	6,62 E–09	2,68 E–09
23 400	2,09 E–08	1,71 E–08	1,52 E–08	8,29 E–09	9,64 E–09	4,04 E–09	3,84 E–09	3,88 E–09	4,37 E–09	5,23 E–09	7,31 E–09	4,23 E–09	3,99 E–09	3,57 E–09	4,25 E–09	4,61 E–09	6,40 E–09	2,57 E–09
23 500	1,94 E–08	1,61 E–08	1,45 E–08	7,80 E–09	9,14 E–09	3,73 E–09	3,54 E–09	3,58 E–09	4,02 E–09	4,79 E–09	6,61 E–09	3,98 E–09	3,88 E–09	3,52 E–09	4,20 E–09	4,55 E–09	6,31 E–09	2,53 E–09
23 600	1,77 E–08	1,52 E–08	1,37 E–08	7,25 E–09	8,64 E–09	3,31 E–09	3,14 E–09	3,17 E–09	3,54 E–09	4,19 E–09	5,64 E–09	3,64 E–09	3,74 E–09	3,44 E–09	4,09 E–09	4,43 E–09	6,14 E–09	2,48 E–09
23700	1,72 E–08	1,49 E–08	1,35 E–08	7,10 E–09	8,49 E–09	3,21 E–09	3,04 E–09	3,07 E–09	3,43 E–09	4,05 E–09	5,43 E–09	3,55 E–09	3,68 E–09	3,40 E–09	4,04 E–09	4,36 E–09	6,05 E–09	2,45 E–09
23 800	1,67 E–08	1,45 E–08	1,31 E–08	6,90 E–09	8,28 E–09	3,09 E–09	2,93 E–09	2,96 E–09	3,29 E–09	3,88 E–09	5,17 E–09	3,45 E–09	3,61 E–09	3,36 E–09	3,99 E–09	4,31 E–09	5,98 E–09	2,42 E–09
24 000	2,66 E–08	1,55 E–08	1,34 E–08	4,92 E–09	5,81 E–09	1,83 E–09	1,70 E–09	1,70 E–09	1,84 E–09	2,07 E–09	2,43 E–09	2,24 E–09	2,76 E–09	2,69 E–09	3,22 E–09	3,45 E–09	4,73 E–09	1,90 E–09
30 000	2,51 E–08	1,34 E–08	1,15 E–08	3,82 E–09	4,39 E–09	1,43 E–09	1,32 E–09	1,32 E–09	1,43 E–09	1,60 E–09	1,86 E–09	1,74 E–09	2,16 E–09	2,10 E–09	2,56 E–09	2,69 E–09	3,60 E–09	1,41 E–09
31 000	2,90 E–08	1,44 E–08	1,21 E–08	3,71 E–09	4,13 E–09	1,38 E–09	1,27 E–09	1,26 E–09	1,37 E–09	1,53 E–09	1,79 E–09	1,66 E–09	2,06 E–09	2,00 E–09	2,44 E–09	2,57 E–09	3,42 E–09	1,33 E–09
32 000	2,83 E–08	1,37 E–08	1,15 E–08	3,39 E–09	3,71 E–09	1,28 E–09	1,18 E–09	1,17 E–09	1,26 E–09	1,42 E–09	1,65 E–09	1,53 E–09	1,90 E–09	1,83 E–09	2,24 E–09	2,37 E–09	3,17 E–09	1,21 E–09

Продолжение таблицы 5.9

Высота, км	Плотность потока, $м^{-2} \cdot год^{-1}$																	
	2,5°	7,5°	12,5°	17,5°	22,5°	27,5°	32,5°	37,5°	42,5°	47,5°	52,5°	57,5°	62,5°	67,5°	72,5°	77,5°	82,5°	87,5°
33 000	3,80 E–08	1,67 E–08	1,37 E–08	3,43 E–09	3,53 E–09	1,26 E–09	1,15 E–09	1,13 E–09	1,22 E–09	1,36 E–09	1,59 E–09	1,46 E–09	1,79 E–09	1,73 E–09	2,12 E–09	2,26 E–09	3,03 E–09	1,14 E–09
34 000	4,36 E–08	1,81 E–08	1,46 E–08	3,25 E–09	3,12 E–09	1,20 E–09	1,09 E–09	1,06 E–09	1,15 E–09	1,28 E–09	1,50 E–09	1,35 E–09	1,65 E–09	1,60 E–09	1,98 E–09	2,13 E–09	2,87 E–09	1,03 E–09
35 000	5,63 E–08	2,23 E–08	1,79 E–08	3,50 E–09	3,15 E–09	1,21 E–09	1,07 E–09	1,04 E–09	1,12 E–09	1,24 E–09	1,45 E–09	1,29 E–09	1,57 E–09	1,50 E–09	1,86 E–09	2,00 E–09	2,69 E–09	9,84 E–10
35 500	7,91 E–08	2,99 E–08	2,37 E–08	3,94 E–09	3,15 E–09	1,28 E–09	1,11 E–09	1,05 E–09	1,13 E–09	1,25 E–09	1,46 E–09	1,27 E–09	1,52 E–09	1,46 E–09	1,81 E–09	1,96 E–09	2,64 E–09	9,44 E–10
35 600	1,05 E–07	3,87 E–08	3,05 E–08	4,59 E–09	3,38 E–09	1,40 E–09	1,19 E–09	1,11 E–09	1,19 E–09	1,30 E–09	1,53 E–09	1,30 E–09	1,54 E–09	1,48 E–09	1,84 E–09	1,99 E–09	2,69 E–09	9,61 E–10
35 700	1,35 E–07	4,91 E–08	3,85 E–08	5,33 E–09	3,60 E–09	1,51 E–09	1,25 E–09	1,15 E–09	1,23 E–09	1,33 E–09	1,56 E–09	1,29 E–09	1,52 E–09	1,46 E–09	1,80 E–09	1,95 E–09	2,63 E–09	9,51 E–10
35 710	1,51 E–07	5,47 E–08	4,28 E–08	5,77 E–09	3,79 E–09	1,59 E–09	1,31 E–09	1,20 E–09	1,28 E–09	1,38 E–09	1,62 E–09	1,33 E–09	1,55 E–09	1,49 E–09	1,85 E–09	1,99 E–09	2,67 E–09	9,71 E–10
35 720	1,63 E–07	5,85 E–08	4,58 E–08	5,98 E–09	3,78 E–09	1,62 E–09	1,33 E–09	1,20 E–09	1,28 E–09	1,38 E–09	1,62 E–09	1,31 E–09	1,52 E–09	1,45 E–09	1,80 E–09	1,95 E–09	2,64 E–09	9,48 E–10
35 730	1,84 E–07	6,59 E–08	5,15 E–08	6,54 E–09	3,97 E–09	1,73 E–09	1,40 E–09	1,25 E–09	1,33 E–09	1,43 E–09	1,67 E–09	1,33 E–09	1,54 E–09	1,48 E–09	1,83 E–09	1,98 E–09	2,66 E–09	9,55 E–10
35 740	2,44 E–07	8,64 E–08	6,72 E–08	7,97 E–09	4,39 E–09	1,96 E–09	1,54 E–09	1,35 E–09	1,43 E–09	1,51 E–09	1,77 E–09	1,35 E–09	1,52 E–09	1,46 E–09	1,80 E–09	1,95 E–09	2,62 E–09	9,44 E–10
35 750	3,22 E–07	1,13 E–07	8,77 E–08	9,94 E–09	5,06 E–09	2,32 E–09	1,78 E–09	1,52 E–09	1,60 E–09	1,67 E–09	1,96 E–09	1,44 E–09	1,57 E–09	1,51 E–09	1,87 E–09	2,02 E–09	2,73 E–09	9,88 E–10
35 760	5,48 E–07	1,90 E–07	1,47 E–07	1,55 E–08	6,71 E–09	3,25 E–09	2,37 E–09	1,93 E–09	2,00 E–09	2,02 E–09	2,37 E–09	1,54 E–09	1,56 E–09	1,49 E–09	1,84 E–09	1,99 E–09	2,67 E–09	9,73 E–10
35 770	1,10 E–06	3,78 E–07	2,92 E–07	2,88 E–08	1,06 E–08	5,54 E–09	3,82 E–09	2,92 E–09	2,98 E–09	2,88 E–09	3,39 E–09	1,82 E–09	1,54 E–09	1,48 E–09	1,83 E–09	1,98 E–09	2,67 E–09	9,54 E–10
35 780	1,15 E–06	3,95 E–07	3,05 E–07	3,00 E–08	1,11 E–08	5,76 E–09	3,97 E–09	3,02 E–09	3,09 E–09	2,98 E–09	3,51 E–09	1,87 E–09	1,57 E–09	1,51 E–09	1,86 E–09	2,02 E–09	2,73 E–09	9,88 E–10
35 790	8,65 E–07	2,98 E–07	2,31 E–07	2,31 E–08	8,88 E–09	4,56 E–09	3,19 E–09	2,49 E–09	2,56 E–09	2,50 E–09	2,95 E–09	1,69 E–09	1,53 E–09	1,47 E–09	1,83 E–09	1,98 E–09	2,67 E–09	9,47 E–10
35 800	6,57 E–07	2,27 E–07	1,76 E–07	1,81 E–08	7,46 E–09	3,71 E–09	2,66 E–09	2,12 E–09	2,19 E–09	2,18 E–09	2,57 E–09	1,59 E–09	1,55 E–09	1,49 E–09	1,84 E–09	1,99 E–09	2,69 E–09	9,69 E–10

Продолжение таблицы 5.9

Высота, км	Плотность потока, $м^{-2} \cdot год^{-1}$																	
	2,5°	7,5°	12,5°	17,5°	22,5°	27,5°	32,5°	37,5°	42,5°	47,5°	52,5°	57,5°	62,5°	67,5°	72,5°	77,5°	82,5°	87,5°
35 810	5,57 E–07	1,94 E–07	1,50 E–07	1,57 E–08	6,81 E–09	3,30 E–09	2,40 E–09	1,95 E–09	2,03 E–09	2,04 E–09	2,40 E–09	1,56 E–09	1,57 E–09	1,51 E–09	1,86 E–09	2,01 E–09	2,72 E–09	9,91 E–10
35 820	4,68 E–07	1,63 E–07	1,26 E–07	1,34 E–08	5,99 E–09	2,90 E–09	2,14 E–09	1,76 E–09	1,84 E–09	1,87 E–09	2,20 E–09	1,48 E–09	1,52 E–09	1,46 E–09	1,81 E–09	1,96 E–09	2,64 E–09	9,42 E–10
35 830	4,05 E–07	1,41 E–07	1,10 E–07	1,20 E–08	5,68 E–09	2,65 E–09	1,99 E–09	1,66 E–09	1,74 E–09	1,79 E–09	2,10 E–09	1,47 E–09	1,56 E–09	1,49 E–09	1,84 E–09	1,99 E–09	2,67 E–09	9,75 E–10
35 840	3,59 E–07	1,26 E–07	9,75 E–08	1,08 E–08	5,32 E–09	2,45 E–09	1,86 E–09	1,57 E–09	1,65 E–09	1,70 E–09	2,00 E–09	1,43 E–09	1,54 E–09	1,48 E–09	1,81 E–09	1,97 E–09	2,66 E–09	9,72 E–10
35 850	3,16 E–07	1,11 E–07	8,59 E–08	9,71 E–09	4,92 E–09	2,28 E–09	1,75 E–09	1,50 E–09	1,57 E–09	1,64 E–09	1,93 E–09	1,41 E–09	1,55 E–09	1,49 E–09	1,84 E–09	2,00 E–09	2,70 E–09	9,65 E–10
35 860	2,88 E–07	1,01 E–07	7,86 E–08	9,03 E–09	4,71 E–09	2,15 E–09	1,67 E–09	1,44 E–09	1,51 E–09	1,58 E–09	1,86 E–09	1,38 E–09	1,53 E–09	1,47 E–09	1,81 E–09	1,97 E–09	2,66 E–09	9,57 E–10
35 870	2,60 E–07	9,18 E–08	7,15 E–08	8,51 E–09	4,73 E–09	2,07 E–09	1,63 E–09	1,42 E–09	1,50 E–09	1,58 E–09	1,86 E–09	1,42 E–09	1,60 E–09	1,53 E–09	1,89 E–09	2,04 E–09	2,75 E–09	1,01 E–09
35 880	2,47 E–07	8,70 E–08	6,77 E–08	7,98 E–09	4,33 E–09	1,97 E–09	1,55 E–09	1,35 E–09	1,43 E–09	1,51 E–09	1,77 E–09	1,35 E–09	1,51 E–09	1,45 E–09	1,80 E–09	1,96 E–09	2,65 E–09	9,37 E–10
35 890	2,44 E–07	8,60 E–08	6,70 E–08	7,97 E–09	4,41 E–09	1,95 E–09	1,53 E–09	1,34 E–09	1,41 E–09	1,49 E–09	1,76 E–09	1,34 E–09	1,50 E–09	1,44 E–09	1,77 E–09	1,91 E–09	2,57 E–09	9,41 E–10
35 900	1,96 E–07	6,93 E–08	5,40 E–08	6,65 E–09	3,85 E–09	1,73 E–09	1,38 E–09	1,23 E–09	1,31 E–09	1,39 E–09	1,64 E–09	1,28 E–09	1,46 E–09	1,41 E–09	1,75 E–09	1,90 E–09	2,55 E–09	9,01 E–10
36 000	1,84 E–07	6,54 E–08	5,10 E–08	6,45 E–09	3,90 E–09	1,69 E–09	1,36 E–09	1,22 E–09	1,30 E–09	1,39 E–09	1,63 E–09	1,29 E–09	1,49 E–09	1,42 E–09	1,76 E–09	1,90 E–09	2,57 E–09	9,28 E–10
36 100	1,71 E–07	6,08 E–08	4,74 E–08	5,99 E–09	3,59 E–09	1,60 E–09	1,30 E–09	1,17 E–09	1,24 E–09	1,33 E–09	1,56 E–09	1,24 E–09	1,43 E–09	1,37 E–09	1,70 E–09	1,85 E–09	2,50 E–09	8,76 E–10
36 200	1,26 E–07	4,55 E–08	3,56 E–08	4,90 E–09	3,27 E–09	1,41 E–09	1,17 E–09	1,07 E–09	1,15 E–09	1,24 E–09	1,46 E–09	1,20 E–09	1,41 E–09	1,35 E–09	1,68 E–09	1,83 E–09	2,47 E–09	8,71 E–10
36 300	1,04 E–07	3,79 E–08	2,98 E–08	4,34 E–09	3,08 E–09	1,30 E–09	1,10 E–09	1,03 E–09	1,10 E–09	1,20 E–09	1,41 E–09	1,18 E–09	1,40 E–09	1,34 E–09	1,66 E–09	1,81 E–09	2,45 E–09	8,64 E–10
36 400	8,22 E–08	3,05 E–08	2,41 E–08	3,82 E–09	2,94 E–09	1,20 E–09	1,03 E–09	9,68 E–10	1,04 E–09	1,14 E–09	1,34 E–09	1,14 E–09	1,37 E–09	1,31 E–09	1,61 E–09	1,75 E–09	2,37 E–09	8,51 E–10
36 500	4,70 E–08	1,83 E–08	1,46 E–08	2,81 E–09	2,48 E–09	9,87 E–10	8,76 E–10	8,44 E–10	9,09 E–10	1,01 E–09	1,19 E–09	1,04 E–09	1,26 E–09	1,21 E–09	1,49 E–09	1,63 E–09	2,21 E–09	7,87 E–10

Окончание таблицы 5.9

Высота, км	Плотность потока, $м^{-2} \cdot год^{-1}$																	
	2,5°	7,5°	12,5°	17,5°	22,5°	27,5°	32,5°	37,5°	42,5°	47,5°	52,5°	57,5°	62,5°	67,5°	72,5°	77,5°	82,5°	87,5°
37 000	2,65 E–08	1,10 E–08	8,87 E–09	2,04 E–09	1,97 E–09	7,89 E–10	7,13 E–10	6,97 E–10	7,52 E–10	8,43 E–10	9,93 E–10	8,80 E–10	1,07 E–09	1,02 E–09	1,26 E–09	1,39 E–09	1,89 E–09	6,65 E–10
38 000	1,63 E–08	7,22 E–09	5,89 E–09	1,55 E–09	1,58 E–09	6,29 E–10	5,74 E–10	5,64 E–10	6,08 E–10	6,84 E–10	8,09 E–10	7,18 E–10	8,77 E–10	8,25 E–10	1,02 E–09	1,13 E–09	1,56 E–09	5,48 E–10
39 000	1,08 E–08	5,09 E–09	4,17 E–09	1,21 E–09	1,27 E–09	5,10 E–10	4,67 E–10	4,60 E–10	4,96 E–10	5,60 E–10	6,64 E–10	5,88 E–10	7,18 E–10	6,67 E–10	8,23 E–10	9,20 E–10	1,26 E–09	4,42 E–10

Таблица 5.10 — Плотность потока КО размером от 5 до 10 см относительно ИСК

Высота, км	Плотность потока, $м^{-2} \cdot год^{-1}$																	
	2,5°	7,5°	12,5°	17,5°	22,5°	27,5°	32,5°	37,5°	42,5°	47,5°	52,5°	57,5°	62,5°	67,5°	72,5°	77,5°	82,5°	87,5°
200	1,44 E–06	1,44 E–06	1,51 E–06	1,51 E–06	1,58 E–06	1,53 E–06	1,47 E–06	1,51 E–06	1,67 E–06	1,90 E–06	2,14 E–06	1,95 E–06	2,41 E–06	2,56 E–06	3,52 E–06	3,92 E–06	5,78 E–06	1,48 E–06
300	2,99 E–06	2,99 E–06	3,15 E–06	3,15 E–06	3,28 E–06	3,19 E–06	3,06 E–06	3,14 E–06	3,48 E–06	3,95 E–06	4,45 E–06	4,06 E–06	5,02 E–06	5,33 E–06	7,31 E–06	8,14 E–06	1,20 E–05	3,07 E–06
400	6,05 E–06	6,05 E–06	6,36 E–06	6,36 E–06	6,62 E–06	6,44 E–06	6,19 E–06	6,34 E–06	7,03 E–06	7,99 E–06	9,00 E–06	8,20 E–06	1,01 E–05	1,08 E–05	1,48 E–05	1,65 E–05	2,43 E–05	6,20 E–06
500	8,75 E–06	8,75 E–06	9,20 E–06	9,20 E–06	9,58 E–06	9,32 E–06	8,96 E–06	9,17 E–06	1,02 E–05	1,16 E–05	1,30 E–05	1,19 E–05	1,47 E–05	1,56 E–05	2,14 E–05	2,38 E–05	3,51 E–05	8,98 E–06
600	1,00 E–05	1,00 E–05	1,05 E–05	1,05 E–05	1,09 E–05	1,06 E–05	1,02 E–05	1,05 E–05	1,16 E–05	1,32 E–05	1,49 E–05	1,36 E–05	1,68 E–05	1,78 E–05	2,44 E–05	2,72 E–05	4,02 E–05	1,03 E–05
700	1,27 E–05	1,27 E–05	1,33 E–05	1,33 E–05	1,39 E–05	1,35 E–05	1,30 E–05	1,33 E–05	1,47 E–05	1,67 E–05	1,88 E–05	1,72 E–05	2,12 E–05	2,25 E–05	3,09 E–05	3,44 E–05	5,08 E–05	1,30 E–05
800	1,16 E–05	1,16 E–05	1,20 E–05	1,20 E–05	1,25 E–05	1,24 E–05	1,23 E–05	1,28 E–05	1,41 E–05	1,57 E–05	1,75 E–05	1,85 E–05	2,33 E–05	2,45 E–05	3,14 E–05	4,15 E–05	5,65 E–05	1,39 E–05
900	7,90 E–06	7,90 E–06	8,10 E–06	8,10 E–06	8,42 E–06	8,47 E–06	8,44 E–06	8,87 E–06	9,73 E–06	1,08 E–05	1,20 E–05	1,34 E–05	1,69 E–05	1,76 E–05	2,22 E–05	3,09 E–05	4,10 E–05	1,00 E–05
1000	4,46 E–06	4,46 E–06	4,58 E–06	4,58 E–06	4,76 E–06	4,79 E–06	4,78 E–06	5,02 E–06	5,51 E–06	6,11 E–06	6,76 E–06	7,58 E–06	9,57 E–06	1,00 E–05	1,26 E–05	1,75 E–05	2,33 E–05	5,69 E–06
1100	2,60 E–06	2,60 E–06	2,67 E–06	2,67 E–06	2,78 E–06	2,79 E–06	2,78 E–06	2,92 E–06	3,21 E–06	3,56 E–06	3,94 E–06	4,39 E–06	5,54 E–06	5,80 E–06	7,30 E–06	1,01 E–05	1,35 E–05	3,29 E–06
1200	1,94 E–06	1,94 E–06	1,99 E–06	1,99 E–06	2,07 E–06	2,09 E–06	2,08 E–06	2,19 E–06	2,40 E–06	2,66 E–06	2,94 E–06	3,30 E–06	4,17 E–06	4,36 E–06	5,47 E–06	7,63 E–06	1,01 E–05	2,48 E–06

Продолжение таблицы 5.10

Высота, км	Плотность потока, $м^{-2} \cdot год^{-1}$																	
	2,5°	7,5°	12,5°	17,5°	22,5°	27,5°	32,5°	37,5°	42,5°	47,5°	52,5°	57,5°	62,5°	67,5°	72,5°	77,5°	82,5°	87,5°
1300	1,96 E–06	1,96 E–06	2,02 E–06	2,02 E–06	2,07 E–06	2,05 E–06	2,09 E–06	2,21 E–06	2,44 E–06	2,74 E–06	3,06 E–06	3,31 E–06	4,11 E–06	4,45 E–06	6,20 E–06	6,47 E–06	6,80 E–06	1,42 E–06
1400	3,18 E–06	3,18 E–06	3,26 E–06	3,26 E–06	3,32 E–06	3,26 E–06	3,37 E–06	3,59 E–06	3,96 E–06	4,51 E–06	5,07 E–06	5,34 E–06	6,54 E–06	7,27 E–06	1,09 E–05	9,00 E–06	6,82 E–06	9,65 E–07
1500	1,75 E–06	1,75 E–06	1,80 E–06	1,80 E–06	1,83 E–06	1,79 E–06	1,85 E–06	1,97 E–06	2,18 E–06	2,48 E–06	2,79 E–06	2,92 E–06	3,58 E–06	3,98 E–06	5,95 E–06	4,95 E–06	3,83 E–06	5,62 E–07
1600	7,86 E–07	7,86 E–07	8,08 E–07	8,08 E–07	8,25 E–07	8,11 E–07	8,31 E–07	8,82 E–07	9,73 E–07	1,11 E–06	1,24 E–06	1,30 E–06	1,60 E–06	1,76 E–06	2,59 E–06	2,28 E–06	1,98 E–06	3,41 E–07
1700	4,63 E–07	4,63 E–07	4,77 E–07	4,77 E–07	4,88 E–07	4,80 E–07	4,89 E–07	5,18 E–07	5,72 E–07	6,50 E–07	7,29 E–07	7,61 E–07	9,36 E–07	1,03 E–06	1,50 E–06	1,37 E–06	1,27 E–06	2,36 E–07
1800	3,65 E–07	3,65 E–07	3,76 E–07	3,76 E–07	3,84 E–07	3,78 E–07	3,85 E–07	4,08 E–07	4,51 E–07	5,12 E–07	5,75 E–07	5,99 E–07	7,37 E–07	8,11 E–07	1,18 E–06	1,07 E–06	9,81 E–07	1,79 E–07
1900	2,73 E–07	2,73 E–07	2,81 E–07	2,81 E–07	2,88 E–07	2,83 E–07	2,88 E–07	3,05 E–07	3,37 E–07	3,83 E–07	4,30 E–07	4,47 E–07	5,50 E–07	6,05 E–07	8,84 E–07	7,99 E–07	7,36 E–07	1,35 E–07
2000	4,69 E–08	4,26 E–08	4,69 E–08	4,26 E–08	4,57 E–08	3,94 E–08	3,88 E–08	4,03 E–08	4,45 E–08	5,04 E–08	5,66 E–08	5,58 E–08	6,91 E–08	7,40 E–08	1,02 E–07	1,09 E–07	1,37 E–07	3,35 E–08
4000	2,45 E–08	2,37 E–08	2,25 E–08	1,27 E–08	1,59 E–08	6,09 E–09	5,84 E–09	5,96 E–09	6,54 E–09	7,37 E–09	8,32 E–09	8,12 E–09	1,02 E–08	1,05 E–08	1,32 E–08	1,45 E–08	2,04 E–08	6,98 E–09
9000	8,21 E–09	7,71 E–09	7,09 E–09	3,83 E–09	4,73 E–09	1,86 E–09	1,76 E–09	1,78 E–09	1,94 E–09	2,19 E–09	2,47 E–09	2,39 E–09	3,00 E–09	3,08 E–09	3,87 E–09	4,27 E–09	6,09 E–09	2,07 E–09
18 000	7,34 E–09	6,58 E–09	5,92 E–09	3,41 E–09	4,00 E–09	1,87 E–09	1,81 E–09	1,87 E–09	2,03 E–09	2,31 E–09	2,72 E–09	2,90 E–09	4,14 E–09	2,09 E–09	2,42 E–09	2,64 E–09	3,76 E–09	1,34 E–09
19 000	3,04 E–08	2,17 E–08	1,78 E–08	1,44 E–08	1,42 E–08	1,18 E–08	1,18 E–08	1,27 E–08	1,37 E–08	1,59 E–08	1,97 E–08	2,31 E–08	3,68 E–08	4,30 E–09	2,58 E–09	2,80 E–09	3,98 E–09	1,45 E–09
19 100	3,39 E–08	2,39 E–08	1,95 E–08	1,61 E–08	1,57 E–08	1,33 E–08	1,34 E–08	1,45 E–08	1,55 E–08	1,80 E–08	2,24 E–08	2,63 E–08	4,20 E–08	4,60 E–09	2,53 E–09	2,75 E–09	3,91 E–09	1,42 E–09
19 200	1,93 E–08	1,44 E–08	1,21 E–08	9,10 E–09	9,27 E–09	6,99 E–09	6,99 E–09	7,50 E–09	8,06 E–09	9,33 E–09	1,15 E–08	1,34 E–08	2,11 E–08	3,18 E–09	2,41 E–09	2,62 E–09	3,72 E–09	1,36 E–09
19 300	1,13 E–08	9,19 E–09	7,98 E–09	5,33 E–09	5,78 E–09	3,59 E–09	3,55 E–09	3,77 E–09	4,06 E–09	4,68 E–09	5,69 E–09	6,46 E–09	9,92 E–09	2,39 E–09	2,31 E–09	2,52 E–09	3,57 E–09	1,31 E–09
19 400	7,98 E–09	6,91 E–09	6,15 E–09	3,72 E–09	4,25 E–09	2,20 E–09	2,15 E–09	2,26 E–09	2,44 E–09	2,79 E–09	3,34 E–09	3,68 E–09	5,47 E–09	1,99 E–09	2,15 E–09	2,34 E–09	3,31 E–09	1,21 E–09
19 600	7,25 E–09	6,43 E–09	5,78 E–09	3,38 E–09	3,94 E–09	1,89 E–09	1,84 E–09	1,92 E–09	2,08 E–09	2,37 E–09	2,83 E–09	3,07 E–09	4,50 E–09	1,88 E–09	2,09 E–09	2,27 E–09	3,21 E–09	1,19 E–09

Продолжение таблицы 5.10

Высота, км	Плотность потока, $м^{-2} \cdot год^{-1}$																	
	2,5°	7,5°	12,5°	17,5°	22,5°	27,5°	32,5°	37,5°	42,5°	47,5°	52,5°	57,5°	62,5°	67,5°	72,5°	77,5°	82,5°	87,5°
19 800	8,43 E–09	7,21 E–09	6,38 E–09	3,94 E–09	4,45 E–09	2,39 E–09	2,35 E–09	2,47 E–09	2,66 E–09	3,06 E–09	3,68 E–09	4,09 E–09	6,15 E–09	1,98 E–09	2,08 E–09	2,26 E–09	3,20 E–09	1,19 E–09
20 000	9,54 E–09	7,61 E–09	6,68 E–09	4,00 E–09	4,48 E–09	2,32 E–09	2,24 E–09	2,32 E–09	2,56 E–09	3,03 E–09	4,02 E–09	3,13 E–09	3,94 E–09	1,80 E–09	2,03 E–09	2,20 E–09	3,11 E–09	1,16 E–09
20 100	9,18 E–09	7,30 E–09	6,43 E–09	3,72 E–09	4,21 E–09	2,04 E–09	1,95 E–09	2,00 E–09	2,23 E–09	2,66 E–09	3,65 E–09	2,38 E–09	2,60 E–09	1,68 E–09	1,99 E–09	2,15 E–09	3,04 E–09	1,14 E–09
20 200	7,20 E–09	6,12 E–09	5,49 E–09	3,04 E–09	3,57 E–09	1,54 E–09	1,47 E–09	1,50 E–09	1,66 E–09	1,95 E–09	2,55 E–09	1,87 E–09	2,16 E–09	1,59 E–09	1,90 E–09	2,06 E–09	2,91 E–09	1,09 E–09
20 300	6,52 E–09	5,71 E–09	5,16 E–09	2,81 E–09	3,35 E–09	1,36 E–09	1,30 E–09	1,32 E–09	1,46 E–09	1,70 E–09	2,17 E–09	1,68 E–09	1,98 E–09	1,55 E–09	1,86 E–09	2,02 E–09	2,85 E–09	1,07 E–09
20 400	8,57 E–09	6,86 E–09	6,06 E–09	3,43 E–09	3,92 E–09	1,81 E–09	1,73 E–09	1,75 E–09	1,97 E–09	2,36 E–09	3,27 E–09	1,97 E–09	1,98 E–09	1,56 E–09	1,88 E–09	2,04 E–09	2,87 E–09	1,09 E–09
20 600	6,63 E–09	5,70 E–09	5,14 E–09	2,79 E–09	3,31 E–09	1,34 E–09	1,28 E–09	1,29 E–09	1,44 E–09	1,69 E–09	2,22 E–09	1,55 E–09	1,71 E–09	1,46 E–09	1,76 E–09	1,91 E–09	2,69 E–09	1,03 E–09
20 800	6,24 E–09	5,47 E–09	4,96 E–09	2,65 E–09	3,18 E–09	1,24 E–09	1,17 E–09	1,19 E–09	1,32 E–09	1,54 E–09	2,00 E–09	1,44 E–09	1,61 E–09	1,42 E–09	1,71 E–09	1,85 E–09	2,60 E–09	1,00 E–09
21 000	6,55 E–09	5,63 E–09	5,08 E–09	2,74 E–09	3,25 E–09	1,30 E–09	1,23 E–09	1,25 E–09	1,39 E–09	1,64 E–09	2,17 E–09	1,47 E–09	1,58 E–09	1,39 E–09	1,67 E–09	1,81 E–09	2,54 E–09	9,86 E–10
21 100	7,08 E–09	5,92 E–09	5,30 E–09	2,89 E–09	3,39 E–09	1,41 E–09	1,34 E–09	1,36 E–09	1,52 E–09	1,81 E–09	2,45 E–09	1,55 E–09	1,59 E–09	1,39 E–09	1,68 E–09	1,81 E–09	2,54 E–09	9,88 E–10
21 200	7,58 E–09	6,17 E–09	5,49 E–09	3,04 E–09	3,52 E–09	1,53 E–09	1,46 E–09	1,47 E–09	1,66 E–09	1,98 E–09	2,75 E–09	1,63 E–09	1,59 E–09	1,38 E–09	1,66 E–09	1,79 E–09	2,52 E–09	9,77 E–10
21 300	7,82 E–09	6,33 E–09	5,62 E–09	3,12 E–09	3,60 E–09	1,57 E–09	1,50 E–09	1,52 E–09	1,71 E–09	2,05 E–09	2,85 E–09	1,66 E–09	1,59 E–09	1,38 E–09	1,66 E–09	1,79 E–09	2,51 E–09	9,82 E–10
21 400	1,03 E–08	7,64 E–09	6,63 E–09	3,86 E–09	4,26 E–09	2,13 E–09	2,03 E–09	2,06 E–09	2,35 E–09	2,87 E–09	4,20 E–09	2,07 E–09	1,68 E–09	1,38 E–09	1,66 E–09	1,79 E–09	2,51 E–09	9,81 E–10
21 600	7,01 E–09	5,81 E–09	5,20 E–09	2,83 E–09	3,31 E–09	1,37 E–09	1,31 E–09	1,32 E–09	1,48 E–09	1,77 E–09	2,43 E–09	1,48 E–09	1,46 E–09	1,29 E–09	1,54 E–09	1,66 E–09	2,33 E–09	9,23 E–10
21 800	6,17 E–09	5,31 E–09	4,79 E–09	2,55 E–09	3,04 E–09	1,18 E–09	1,12 E–09	1,13 E–09	1,26 E–09	1,49 E–09	1,99 E–09	1,32 E–09	1,38 E–09	1,24 E–09	1,49 E–09	1,60 E–09	2,24 E–09	8,94 E–10
22 000	6,88 E–09	5,71 E–09	5,11 E–09	2,77 E–09	3,25 E–09	1,33 E–09	1,27 E–09	1,28 E–09	1,44 E–09	1,72 E–09	2,37 E–09	1,43 E–09	1,40 E–09	1,24 E–09	1,47 E–09	1,59 E–09	2,22 E–09	8,91 E–10
22 200	5,75 E–09	5,02 E–09	4,55 E–09	2,40 E–09	2,88 E–09	1,08 E–09	1,02 E–09	1,03 E–09	1,15 E–09	1,35 E–09	1,79 E–09	1,22 E–09	1,30 E–09	1,19 E–09	1,41 E–09	1,53 E–09	2,13 E–09	8,56 E–10

Продолжение таблицы 5.10

Высота, км	Плотность потока, $м^{-2} \cdot год^{-1}$																	
	2,5°	7,5°	12,5°	17,5°	22,5°	27,5°	32,5°	37,5°	42,5°	47,5°	52,5°	57,5°	62,5°	67,5°	72,5°	77,5°	82,5°	87,5°
22 400	5,33 E–09	4,74 E–09	4,32 E–09	2,25 E–09	2,73 E–09	9,88 E–10	9,36 E–10	9,45 E–10	1,05 E–09	1,22 E–09	1,59 E–09	1,14 E–09	1,26 E–09	1,16 E–09	1,38 E–09	1,50 E–09	2,08 E–09	8,35 E–10
22 600	4,96 E–09	4,51 E–09	4,12 E–09	2,12 E–09	2,60 E–09	9,10 E–10	8,60 E–10	8,68 E–10	9,58 E–10	1,11 E–09	1,41 E–09	1,07 E–09	1,22 E–09	1,14 E–09	1,36 E–09	1,47 E–09	2,05 E–09	8,20 E–10
22 800	4,79 E–09	4,40 E–09	4,03 E–09	2,07 E–09	2,54 E–09	8,70 E–10	8,22 E–10	8,29 E–10	9,14 E–10	1,06 E–09	1,33 E–09	1,04 E–09	1,19 E–09	1,12 E–09	1,33 E–09	1,44 E–09	2,00 E–09	8,04 E–10
23 000	5,00 E–09	4,51 E–09	4,12 E–09	2,13 E–09	2,59 E–09	9,15 E–10	8,65 E–10	8,73 E–10	9,66 E–10	1,12 E–09	1,45 E–09	1,06 E–09	1,19 E–09	1,11 E–09	1,32 E–09	1,42 E–09	1,98 E–09	7,99 E–10
23 200	7,96 E–09	6,20 E–09	5,45 E–09	3,06 E–09	3,47 E–09	1,58 E–09	1,51 E–09	1,53 E–09	1,73 E–09	2,10 E–09	3,03 E–09	1,57 E–09	1,35 E–09	1,16 E–09	1,38 E–09	1,49 E–09	2,07 E–09	8,37 E–10
23 400	6,52 E–09	5,34 E–09	4,76 E–09	2,59 E–09	3,01 E–09	1,26 E–09	1,20 E–09	1,21 E–09	1,36 E–09	1,64 E–09	2,28 E–09	1,32 E–09	1,25 E–09	1,12 E–09	1,33 E–09	1,44 E–09	2,00 E–09	8,04 E–10
23 500	6,06 E–09	5,05 E–09	4,52 E–09	2,44 E–09	2,86 E–09	1,17 E–09	1,11 E–09	1,12 E–09	1,26 E–09	1,50 E–09	2,06 E–09	1,24 E–09	1,21 E–09	1,10 E–09	1,31 E–09	1,42 E–09	1,97 E–09	7,90 E–10
23 600	5,52 E–09	4,74 E–09	4,28 E–09	2,27 E–09	2,70 E–09	1,03 E–09	9,81 E–10	9,91 E–10	1,11 E–09	1,31 E–09	1,76 E–09	1,14 E–09	1,17 E–09	1,08 E–09	1,28 E–09	1,38 E–09	1,92 E–09	7,76 E–10
23 700	5,39 E–09	4,66 E–09	4,21 E–09	2,22 E–09	2,65 E–09	1,00 E–09	9,51 E–10	9,61 E–10	1,07 E–09	1,26 E–09	1,70 E–09	1,11 E–09	1,15 E–09	1,06 E–09	1,26 E–09	1,36 E–09	1,89 E–09	7,66 E–10
23 800	5,21 E–09	4,54 E–09	4,11 E–09	2,16 E–09	2,59 E–09	9,67 E–10	9,16 E–10	9,25 E–10	1,03 E–09	1,21 E–09	1,62 E–09	1,08 E–09	1,13 E–09	1,05 E–09	1,25 E–09	1,35 E–09	1,87 E–09	7,56 E–10
24 000	8,32 E–09	4,83 E–09	4,20 E–09	1,54 E–09	1,82 E–09	5,72 E–10	5,32 E–10	5,30 E–10	5,75 E–10	6,48 E–10	7,59 E–10	6,99 E–10	8,63 E–10	8,39 E–10	1,01 E–09	1,08 E–09	1,48 E–09	5,93 E–10
30 000	7,84 E–09	4,20 E–09	3,58 E–09	1,20 E–09	1,37 E–09	4,47 E–10	4,14 E–10	4,12 E–10	4,45 E–10	5,01 E–10	5,82 E–10	5,45 E–10	6,76 E–10	6,58 E–10	8,00 E–10	8,42 E–10	1,12 E–09	4,41 E–10
31 000	9,06 E–09	4,50 E–09	3,79 E–09	1,16 E–09	1,29 E–09	4,32 E–10	3,98 E–10	3,95 E–10	4,27 E–10	4,80 E–10	5,58 E–10	5,20 E–10	6,45 E–10	6,24 E–10	7,63 E–10	8,02 E–10	1,07 E–09	4,14 E–10
32 000	8,86 E–09	4,28 E–09	3,58 E–09	1,06 E–09	1,16 E–09	4,00 E–10	3,68 E–10	3,65 E–10	3,94 E–10	4,43 E–10	5,16 E–10	4,79 E–10	5,92 E–10	5,71 E–10	7,01 E–10	7,41 E–10	9,90 E–10	3,77 E–10
33000	1,19 E–08	5,21 E–09	4,27 E–09	1,07 E–09	1,10 E–09	3,94 E–10	3,59 E–10	3,53 E–10	3,81 E–10	4,27 E–10	4,97 E–10	4,55 E–10	5,60 E–10	5,40 E–10	6,64 E–10	7,05 E–10	9,46 E–10	3,55 E–10
34 000	1,36 E–08	5,64 E–09	4,56 E–09	1,02 E–09	9,76 E–10	3,76 E–10	3,40 E–10	3,33 E–10	3,59 E–10	4,01 E–10	4,69 E–10	4,23 E–10	5,17 E–10	4,99 E–10	6,20 E–10	6,66 E–10	8,96 E–10	3,21 E–10
35 000	1,76 E–08	6,98 E–09	5,59 E–09	1,10 E–09	9,86 E–10	3,77 E–10	3,35 E–10	3,24 E–10	3,48 E–10	3,87 E–10	4,53 E–10	4,03 E–10	4,89 E–10	4,70 E–10	5,80 E–10	6,25 E–10	8,42 E–10	3,08 E–10

Продолжение таблицы 5.10

Высота, км	Плотность потока, $м^{-2} \cdot год^{-1}$																	
	2,5°	7,5°	12,5°	17,5°	22,5°	27,5°	32,5°	37,5°	42,5°	47,5°	52,5°	57,5°	62,5°	67,5°	72,5°	77,5°	82,5°	87,5°
35 500	2,47 E–08	9,35 E–09	7,40 E–09	1,23 E–09	9,84 E–10	4,00 E–10	3,47 E–10	3,29 E–10	3,54 E–10	3,90 E–10	4,57 E–10	3,96 E–10	4,75 E–10	4,57 E–10	5,67 E–10	6,13 E–10	8,26 E–10	2,95 E–10
35 600	3,28 E–08	1,21 E–08	9,53 E–09	1,43 E–09	1,05 E–09	4,37 E–10	3,72 E–10	3,48 E–10	3,72 E–10	4,07 E–10	4,77 E–10	4,05 E–10	4,81 E–10	4,63 E–10	5,74 E–10	6,22 E–10	8,41 E–10	3,00 E–10
35 700	4,22 E–08	1,53 E–08	1,20 E–08	1,66 E–09	1,13 E–09	4,71 E–10	3,92 E–10	3,60 E–10	3,84 E–10	4,17 E–10	4,89 E–10	4,04 E–10	4,75 E–10	4,55 E–10	5,62 E–10	6,08 E–10	8,21 E–10	2,97 E–10
35 710	4,73 E–08	1,71 E–08	1,34 E–08	1,80 E–09	1,18 E–09	4,97 E–10	4,11 E–10	3,75 E–10	4,00 E–10	4,32 E–10	5,07 E–10	4,16 E–10	4,85 E–10	4,67 E–10	5,77 E–10	6,21 E–10	8,35 E–10	3,03 E–10
35 720	5,09 E–08	1,83 E–08	1,43 E–08	1,87 E–09	1,18 E–09	5,07 E–10	4,15 E–10	3,76 E–10	4,00 E–10	4,30 E–10	5,05 E–10	4,08 E–10	4,74 E–10	4,54 E–10	5,62 E–10	6,10 E–10	8,24 E–10	2,96 E–10
35 730	5,76 E–08	2,06 E–08	1,61 E–08	2,04 E–09	1,24 E–09	5,40 E–10	4,37 E–10	3,92 E–10	4,16 E–10	4,45 E–10	5,23 E–10	4,17 E–10	4,80 E–10	4,62 E–10	5,72 E–10	6,18 E–10	8,31 E–10	2,99 E–10
35 740	7,63 E–08	2,70 E–08	2,10 E–08	2,49 E–09	1,37 E–09	6,14 E–10	4,83 E–10	4,22 E–10	4,46 E–10	4,71 E–10	5,53 E–10	4,23 E–10	4,75 E–10	4,56 E–10	5,64 E–10	6,10 E–10	8,20 E–10	2,95 E–10
35 750	1,00 E–07	3,53 E–08	2,74 E–08	3,11 E–09	1,58 E–09	7,25 E–10	5,57 E–10	4,77 E–10	5,01 E–10	5,22 E–10	6,13 E–10	4,49 E–10	4,92 E–10	4,72 E–10	5,83 E–10	6,32 E–10	8,55 E–10	3,09 E–10
35 760	1,71 E–07	5,95 E–08	4,61 E–08	4,83 E–09	2,10 E–09	1,02 E–09	7,40 E–10	6,02 E–10	6,25 E–10	6,30 E–10	7,42 E–10	4,82 E–10	4,87 E–10	4,67 E–10	5,76 E–10	6,21 E–10	8,35 E–10	3,04 E–10
35 770	3,43 E–07	1,18 E–07	9,13 E–08	8,99 E–09	3,32 E–09	1,73 E–09	1,19 E–09	9,11 E–10	9,33 E–10	8,99 E–10	1,06 E–09	5,68 E–10	4,80 E–10	4,61 E–10	5,72 E–10	6,20 E–10	8,36 E–10	2,98 E–10
35 780	3,59 E–07	1,24 E–07	9,54 E–08	9,39 E–09	3,47 E–09	1,80 E–09	1,24 E–09	9,45 E–10	9,67 E–10	9,31 E–10	1,10 E–09	5,85 E–10	4,91 E–10	4,72 E–10	5,83 E–10	6,32 E–10	8,54 E–10	3,09 E–10
35 790	2,70 E–07	9,32 E–08	7,21 E–08	7,20 E–09	2,78 E–09	1,42 E–09	9,98 E–10	7,77 E–10	7,99 E–10	7,82 E–10	9,22 E–10	5,28 E–10	4,79 E–10	4,60 E–10	5,71 E–10	6,19 E–10	8,34 E–10	2,96 E–10
35 800	2,05 E–07	7,11 E–08	5,50 E–08	5,65 E–09	2,33 E–09	1,16 E–09	8,30 E–10	6,63 E–10	6,85 E–10	6,83 E–10	8,04 E–10	4,98 E–10	4,84 E–10	4,65 E–10	5,74 E–10	6,22 E–10	8,41 E–10	3,03 E–10
35 810	1,74 E–07	6,05 E–08	4,68 E–08	4,91 E–09	2,13 E–09	1,03 E–09	7,51 E–10	6,10 E–10	6,33 E–10	6,38 E–10	7,50 E–10	4,87 E–10	4,91 E–10	4,71 E–10	5,81 E–10	6,28 E–10	8,50 E–10	3,10 E–10
35 820	1,46 E–07	5,08 E–08	3,94 E–08	4,19 E–09	1,87 E–09	9,06 E–10	6,69 E–10	5,51 E–10	5,74 E–10	5,84 E–10	6,87 E–10	4,61 E–10	4,76 E–10	4,57 E–10	5,66 E–10	6,12 E–10	8,24 E–10	2,94 E–10
35 830	1,27 E–07	4,42 E–08	3,43 E–08	3,74 E–09	1,77 E–09	8,30 E–10	6,22 E–10	5,20 E–10	5,43 E–10	5,58 E–10	6,56 E–10	4,58 E–10	4,86 E–10	4,67 E–10	5,75 E–10	6,21 E–10	8,35 E–10	3,05 E–10
35 840	1,12 E–07	3,93 E–08	3,05 E–08	3,39 E–09	1,66 E–09	7,67 E–10	5,81 E–10	4,91 E–10	5,14 E–10	5,32 E–10	6,25 E–10	4,46 E–10	4,81 E–10	4,61 E–10	5,67 E–10	6,15 E–10	8,31 E–10	3,04 E–10

Окончание таблицы 5.10

Высота, км	Плотность потока, $м^{-2} \cdot год^{-1}$																	
	2,5°	7,5°	12,5°	17,5°	22,5°	27,5°	32,5°	37,5°	42,5°	47,5°	52,5°	57,5°	62,5°	67,5°	72,5°	77,5°	82,5°	87,5°
35 850	9,87 E–08	3,46 E–08	2,68 E–08	3,04 E–09	1,54 E–09	7,11 E–10	5,46 E–10	4,68 E–10	4,92 E–10	5,13 E–10	6,02 E–10	4,41 E–10	4,83 E–10	4,65 E–10	5,75 E–10	6,24 E–10	8,43 E–10	3,01 E–10
35 860	9,00 E–08	3,16 E–08	2,46 E–08	2,82 E–09	1,47 E–09	6,72 E–10	5,20 E–10	4,49 E–10	4,73 E–10	4,95 E–10	5,81 E–10	4,32 E–10	4,78 E–10	4,59 E–10	5,67 E–10	6,16 E–10	8,32 E–10	2,99 E–10
35 870	8,14 E–08	2,87 E–08	2,23 E–08	2,66 E–09	1,48 E–09	6,48 E–10	5,09 E–10	4,45 E–10	4,69 E–10	4,95 E–10	5,81 E–10	4,44 E–10	4,99 E–10	4,80 E–10	5,90 E–10	6,37 E–10	8,60 E–10	3,16 E–10
35 880	7,72 E–08	2,72 E–08	2,12 E–08	2,49 E–09	1,35 E–09	6,16 E–10	4,84 E–10	4,23 E–10	4,47 E–10	4,72 E–10	5,54 E–10	4,22 E–10	4,73 E–10	4,54 E–10	5,64 E–10	6,13 E–10	8,27 E–10	2,93 E–10
35 890	7,62 E–08	2,69 E–08	2,09 E–08	2,49 E–09	1,38 E–09	6,10 E–10	4,79 E–10	4,19 E–10	4,42 E–10	4,67 E–10	5,49 E–10	4,18 E–10	4,70 E–10	4,50 E–10	5,55 E–10	5,98 E–10	8,04 E–10	2,94 E–10
35 900	6,11 E–08	2,17 E–08	1,69 E–08	2,08 E–09	1,20 E–09	5,39 E–10	4,32 E–10	3,85 E–10	4,08 E–10	4,35 E–10	5,11 E–10	4,01 E–10	4,57 E–10	4,39 E–10	5,46 E–10	5,93 E–10	7,98 E–10	2,81 E–10
36 000	5,74 E–08	2,04 E–08	1,59 E–08	2,02 E–09	1,22 E–09	5,28 E–10	4,26 E–10	3,82 E–10	4,05 E–10	4,33 E–10	5,09 E–10	4,04 E–10	4,64 E–10	4,45 E–10	5,50 E–10	5,95 E–10	8,02 E–10	2,90 E–10
36 100	5,35 E–08	1,90 E–08	1,48 E–08	1,87 E–09	1,12 E–09	5,01 E–10	4,06 E–10	3,64 E–10	3,87 E–10	4,15 E–10	4,87 E–10	3,88 E–10	4,46 E–10	4,27 E–10	5,32 E–10	5,79 E–10	7,80 E–10	2,74 E–10
36 200	3,94 E–08	1,42 E–08	1,11 E–08	1,53 E–09	1,02 E–09	4,39 E–10	3,66 E–10	3,36 E–10	3,58 E–10	3,89 E–10	4,56 E–10	3,76 E–10	4,41 E–10	4,23 E–10	5,25 E–10	5,71 E–10	7,71 E–10	2,72 E–10
36 300	3,25 E–08	1,18 E–08	9,30 E–09	1,36 E–09	9,62 E–10	4,08 E–10	3,45 E–10	3,21 E–10	3,43 E–10	3,74 E–10	4,40 E–10	3,69 E–10	4,36 E–10	4,18 E–10	5,19 E–10	5,65 E–10	7,65 E–10	2,70 E–10
36 400	2,57 E–08	9,53 E–09	7,52 E–09	1,19 E–09	9,19 E–10	3,74 E–10	3,21 E–10	3,02 E–10	3,24 E–10	3,56 E–10	4,18 E–10	3,58 E–10	4,27 E–10	4,08 E–10	5,05 E–10	5,48 E–10	7,39 E–10	2,66 E–10
36 500	1,47 E–08	5,72 E–09	4,56 E–09	8,78 E–10	7,75 E–10	3,09 E–10	2,74 E–10	2,64 E–10	2,84 E–10	3,16 E–10	3,71 E–10	3,26 E–10	3,95 E–10	3,78 E–10	4,67 E–10	5,10 E–10	6,90 E–10	2,46 E–10
37 000	8,27 E–09	3,43 E–09	2,77 E–09	6,39 E–10	6,17 E–10	2,47 E–10	2,23 E–10	2,18 E–10	2,35 E–10	2,63 E–10	3,10 E–10	2,75 E–10	3,35 E–10	3,18 E–10	3,94 E–10	4,33 E–10	5,91 E–10	2,08 E–10
38 000	5,08 E–09	2,26 E–09	1,84 E–09	4,85 E–10	4,94 E–10	1,97 E–10	1,79 E–10	1,76 E–10	1,90 E–10	2,14 E–10	2,53 E–10	2,24 E–10	2,74 E–10	2,58 E–10	3,18 E–10	3,54 E–10	4,88 E–10	1,71 E–10
39 000	3,38 E–09	1,59 E–09	1,30 E–09	3,79 E–10	3,97 E–10	1,60 E–10	1,46 E–10	1,44 E–10	1,55 E–10	1,75 E–10	2,08 E–10	1,84 E–10	2,24 E–10	2,08 E–10	2,57 E–10	2,87 E–10	3,95 E–10	1,38 E–10

Таблица 5.11 — Плотность потока КО размером от 10 до 20 см относительно ИСК

Высота, км	Плотность потока, $м^{-2} \cdot год^{-1}$																	
	2,5°	7,5°	12,5°	17,5°	22,5°	27,5°	32,5°	37,5°	42,5°	47,5°	52,5°	57,5°	62,5°	67,5°	72,5°	77,5°	82,5°	87,5°
200	4,32 E–07	4,32 E–07	4,54 E–07	4,54 E–07	4,73 E–07	4,60 E–07	4,42 E–07	4,53 E–07	5,02 E–07	5,71 E–07	6,43 E–07	5,86 E–07	7,24 E–07	7,69 E–07	1,06 E–06	1,17 E–06	1,73 E–06	4,43 E–07
300	8,98 E–07	8,98 E–07	9,44 E–07	9,44 E–07	9,83 E–07	9,56 E–07	9,19 E–07	9,41 E–07	1,04 E–06	1,19 E–06	1,34 E–06	1,22 E–06	1,50 E–06	1,60 E–06	2,19 E–06	2,44 E–06	3,60 E–06	9,21 E–07
400	1,82 E–06	1,82 E–06	1,91 E–06	1,91 E–06	1,99 E–06	1,93 E–06	1,86 E–06	1,90 E–06	2,11 E–06	2,40 E–06	2,70 E–06	2,46 E–06	3,04 E–06	3,23 E–06	4,43 E–06	4,94 E–06	7,29 E–06	1,86 E–06
500	2,63 E–06	2,63 E–06	2,76 E–06	2,76 E–06	2,87 E–06	2,80 E–06	2,69 E–06	2,75 E–06	3,05 E–06	3,47 E–06	3,91 E–06	3,56 E–06	4,40 E–06	4,67 E–06	6,41 E–06	7,14 E–06	1,05 E–05	2,69 E–06
600	3,00 E–06	3,00 E–06	3,15 E–06	3,15 E–06	3,28 E–06	3,19 E–06	3,07 E–06	3,14 E–06	3,49 E–06	3,96 E–06	4,46 E–06	4,07 E–06	5,03 E–06	5,34 E–06	7,33 E–06	8,16 E–06	1,20 E–05	3,08 E–06
700	3,80 E–06	3,80 E–06	3,99 E–06	3,99 E–06	4,16 E–06	4,04 E–06	3,89 E–06	3,98 E–06	4,41 E–06	5,02 E–06	5,65 E–06	5,15 E–06	6,37 E–06	6,76 E–06	9,28 E–06	1,03 E–05	1,53 E–05	3,90 E–06
800	3,48 E–06	3,48 E–06	3,59 E–06	3,59 E–06	3,74 E–06	3,72 E–06	3,68 E–06	3,84 E–06	4,22 E–06	4,71 E–06	5,24 E–06	5,56 E–06	6,99 E–06	7,34 E–06	9,42 E–06	1,25 E–05	1,69 E–05	4,18 E–06
900	2,37 E–06	2,37 E–06	2,43 E–06	2,43 E–06	2,53 E–06	2,54 E–06	2,53 E–06	2,66 E–06	2,92 E–06	3,24 E–06	3,59 E–06	4,01 E–06	5,06 E–06	5,29 E–06	6,65 E–06	9,26 E–06	1,23 E–05	3,01 E–06
1000	1,34 E–06	1,34 E–06	1,37 E–06	1,37 E–06	1,43 E–06	1,44 E–06	1,43 E–06	1,51 E–06	1,65 E–06	1,83 E–06	2,03 E–06	2,27 E–06	2,87 E–06	3,00 E–06	3,77 E–06	5,26 E–06	6,98 E–06	1,71 E–06
1100	7,81 E–07	7,81 E–07	8,02 E–07	8,02 E–07	8,34 E–07	8,38 E–07	8,35 E–07	8,77 E–07	9,62 E–07	1,07 E–06	1,18 E–06	1,32 E–06	1,66 E–06	1,74 E–06	2,19 E–06	3,03 E–06	4,04 E–06	9,88 E–07
1200	5,83 E–07	5,83 E–07	5,98 E–07	5,98 E–07	6,22 E–07	6,26 E–07	6,24 E–07	6,56 E–07	7,19 E–07	7,98 E–07	8,83 E–07	9,89 E–07	1,25 E–06	1,31 E–06	1,64 E–06	2,29 E–06	3,04 E–06	7,43 E–07
1300	5,89 E–07	5,89 E–07	6,05 E–07	6,05 E–07	6,21 E–07	6,16 E–07	6,27 E–07	6,64 E–07	7,31 E–07	8,23 E–07	9,19 E–07	9,92 E–07	1,23 E–06	1,33 E–06	1,86 E–06	1,94 E–06	2,04 E–06	4,25 E–07
1400	9,54 E–07	9,54 E–07	9,79 E–07	9,79 E–07	9,95 E–07	9,78 E–07	1,01 E–06	1,08 E–06	1,19 E–06	1,35 E–06	1,52 E–06	1,60 E–06	1,96 E–06	2,18 E–06	3,27 E–06	2,70 E–06	2,05 E–06	2,90 E–07
1500	5,25 E–07	5,25 E–07	5,39 E–07	5,39 E–07	5,48 E–07	5,38 E–07	5,55 E–07	5,91 E–07	6,53 E–07	7,44 E–07	8,36 E–07	8,76 E–07	1,07 E–06	1,19 E–06	1,78 E–06	1,48 E–06	1,15 E–06	1,69 E–07
1600	2,36 E–07	2,36 E–07	2,43 E–07	2,43 E–07	2,47 E–07	2,43 E–07	2,49 E–07	2,65 E–07	2,92 E–07	3,32 E–07	3,73 E–07	3,90 E–07	4,79 E–07	5,29 E–07	7,78 E–07	6,85 E–07	5,95 E–07	1,02 E–07
1700	1,39 E–07	1,39 E–07	1,43 E–07	1,43 E–07	1,46 E–07	1,44 E–07	1,47 E–07	1,55 E–07	1,72 E–07	1,95 E–07	2,19 E–07	2,28 E–07	2,81 E–07	3,09 E–07	4,49 E–07	4,10 E–07	3,81 E–07	7,07 E–08

Продолжение таблицы 5.11

Высота, км	Плотность потока, $м^{-2} \cdot год^{-1}$																	
	2,5°	7,5°	12,5°	17,5°	22,5°	27,5°	32,5°	37,5°	42,5°	47,5°	52,5°	57,5°	62,5°	67,5°	72,5°	77,5°	82,5°	87,5°
1800	1,09 E–07	1,09 E–07	1,13 E–07	1,13 E–07	1,15 E–07	1,13 E–07	1,16 E–07	1,22 E–07	1,35 E–07	1,54 E–07	1,72 E–07	1,80 E–07	2,21 E–07	2,43 E–07	3,55 E–07	3,21 E–07	2,94 E–07	5,38 E–08
1900	8,20 E–08	8,20 E–08	8,44 E–08	8,44 E–08	8,63 E–08	8,49 E–08	8,65 E–08	9,16 E–08	1,01 E–07	1,15 E–07	1,29 E–07	1,34 E–07	1,65 E–07	1,82 E–07	2,65 E–07	2,40 E–07	2,21 E–07	4,05 E–08
2000	1,41 E–08	1,28 E–08	1,41 E–08	1,28 E–08	1,37 E–08	1,18 E–08	1,16 E–08	1,21 E–08	1,34 E–08	1,51 E–08	1,70 E–08	1,67 E–08	2,07 E–08	2,22 E–08	3,06 E–08	3,26 E–08	4,12 E–08	1,00 E–08
4000	7,36 E–09	7,12 E–09	6,76 E–09	3,80 E–09	4,77 E–09	1,83 E–09	1,75 E–09	1,79 E–09	1,96 E–09	2,21 E–09	2,50 E–09	2,43 E–09	3,06 E–09	3,16 E–09	3,96 E–09	4,34 E–09	6,12 E–09	2,09 E–09
9000	2,46 E–09	2,31 E–09	2,13 E–09	1,15 E–09	1,42 E–09	5,58 E–10	5,28 E–10	5,34 E–10	5,83 E–10	6,56 E–10	7,41 E–10	7,16 E–10	8,99 E–10	9,24 E–10	1,16 E–09	1,28 E–09	1,83 E–09	6,20 E–10
18 000	2,20 E–09	1,97 E–09	1,78 E–09	1,02 E–09	1,20 E–09	5,60 E–10	5,42 E–10	5,62 E–10	6,08 E–10	6,93 E–10	8,17 E–10	8,69 E–10	1,24 E–09	6,28 E–10	7,26 E–10	7,93 E–10	1,13 E–09	4,02 E–10
19 000	9,11 E–09	6,50 E–09	5,33 E–09	4,32 E–09	4,25 E–09	3,53 E–09	3,55 E–09	3,82 E–09	4,11 E–09	4,76 E–09	5,91 E–09	6,93 E–09	1,10 E–08	1,29 E–09	7,73 E–10	8,41 E–10	1,19 E–09	4,34 E–10
19 100	1,02 E–08	7,18 E–09	5,86 E–09	4,83 E–09	4,72 E–09	4,00 E–09	4,03 E–09	4,34 E–09	4,66 E–09	5,41 E–09	6,72 E–09	7,89 E–09	1,26 E–08	1,38 E–09	7,58 E–10	8,25 E–10	1,17 E–09	4,26 E–10
19 200	5,78 E–09	4,31 E–09	3,62 E–09	2,73 E–09	2,78 E–09	2,10 E–09	2,10 E–09	2,25 E–09	2,42 E–09	2,80 E–09	3,45 E–09	4,01 E–09	6,33 E–09	9,54 E–10	7,23 E–10	7,87 E–10	1,12 E–09	4,08 E–10
19 300	3,40 E–09	2,76 E–09	2,40 E–09	1,60 E–09	1,73 E–09	1,08 E–09	1,07 E–09	1,13 E–09	1,22 E–09	1,40 E–09	1,71 E–09	1,94 E–09	2,98 E–09	7,18 E–10	6,94 E–10	7,55 E–10	1,07 E–09	3,92 E–10
19 400	2,39 E–09	2,07 E–09	1,84 E–09	1,12 E–09	1,28 E–09	6,60 E–10	6,46 E–10	6,77 E–10	7,31 E–10	8,37 E–10	1,00 E–09	1,10 E–09	1,64 E–09	5,96 E–10	6,45 E–10	7,01 E–10	9,93 E–10	3,64 E–10
19 600	2,18 E–09	1,93 E–09	1,73 E–09	1,02 E–09	1,18 E–09	5,68 E–10	5,53 E–10	5,77 E–10	6,23 E–10	7,12 E–10	8,48 E–10	9,22 E–10	1,35 E–09	5,64 E–10	6,26 E–10	6,81 E–10	9,64 E–10	3,56 E–10
19 800	2,53 E–09	2,16 E–09	1,92 E–09	1,18 E–09	1,34 E–09	7,17 E–10	7,04 E–10	7,41 E–10	7,99 E–10	9,17 E–10	1,10 E–09	1,23 E–09	1,84 E–09	5,95 E–10	6,25 E–10	6,79 E–10	9,61 E–10	3,56 E–10
20 000	2,86 E–09	2,28 E–09	2,00 E–09	1,20 E–09	1,34 E–09	6,95 E–10	6,73 E–10	6,95 E–10	7,69 E–10	9,09 E–10	1,21 E–09	9,38 E–10	1,18 E–09	5,39 E–10	6,08 E–10	6,60 E–10	9,33 E–10	3,48 E–10
20 100	2,75 E–09	2,19 E–09	1,93 E–09	1,12 E–09	1,26 E–09	6,11 E–10	5,86 E–10	5,99 E–10	6,70 E–10	7,99 E–10	1,10 E–09	7,15 E–10	7,81 E–10	5,04 E–10	5,96 E–10	6,46 E–10	9,13 E–10	3,42 E–10
20 200	2,16 E–09	1,84 E–09	1,65 E–09	9,13 E–10	1,07 E–09	4,61 E–10	4,41 E–10	4,49 E–10	4,98 E–10	5,85 E–10	7,66 E–10	5,60 E–10	6,47 E–10	4,77 E–10	5,70 E–10	6,18 E–10	8,73 E–10	3,28 E–10

Продолжение таблицы 5.11

Высота, км	Плотность потока, $м^{-2} \cdot год^{-1}$																	
	2,5°	7,5°	12,5°	17,5°	22,5°	27,5°	32,5°	37,5°	42,5°	47,5°	52,5°	57,5°	62,5°	67,5°	72,5°	77,5°	82,5°	87,5°
20 300	1,95 E–09	1,71 E–09	1,55 E–09	8,42 E–10	1,00 E–09	4,08 E–10	3,89 E–10	3,96 E–10	4,37 E–10	5,10 E–10	6,51 E–10	5,04 E–10	5,95 E–10	4,66 E–10	5,59 E–10	6,07 E–10	8,56 E–10	3,22 E–10
20 400	2,57 E–09	2,06 E–09	1,82 E–09	1,03 E–09	1,18 E–09	5,43 E–10	5,18 E–10	5,26 E–10	5,91 E–10	7,08 E–10	9,80 E–10	5,92 E–10	5,95 E–10	4,69 E–10	5,64 E–10	6,11 E–10	8,62 E–10	3,26 E–10
20 600	1,99 E–09	1,71 E–09	1,54 E–09	8,36 E–10	9,92 E–10	4,02 E–10	3,83 E–10	3,88 E–10	4,31 E–10	5,07 E–10	6,66 E–10	4,66 E–10	5,13 E–10	4,39 E–10	5,29 E–10	5,73 E–10	8,07 E–10	3,08 E–10
20 800	1,87 E–09	1,64 E–09	1,49 E–09	7,95 E–10	9,53 E–10	3,71 E–10	3,52 E–10	3,57 E–10	3,96 E–10	4,63 E–10	6,01 E–10	4,33 E–10	4,83 E–10	4,26 E–10	5,13 E–10	5,55 E–10	7,80 E–10	3,00 E–10
21 000	1,97 E–09	1,69 E–09	1,52 E–09	8,21 E–10	9,76 E–10	3,89 E–10	3,70 E–10	3,74 E–10	4,17 E–10	4,91 E–10	6,51 E–10	4,42 E–10	4,74 E–10	4,18 E–10	5,02 E–10	5,42 E–10	7,61 E–10	2,96 E–10
21 100	2,12 E–09	1,78 E–09	1,59 E–09	8,68 E–10	1,02 E–09	4,24 E–10	4,03 E–10	4,08 E–10	4,57 E–10	5,43 E–10	7,36 E–10	4,66 E–10	4,77 E–10	4,18 E–10	5,03 E–10	5,43 E–10	7,63 E–10	2,96 E–10
21 200	2,27 E–09	1,85 E–09	1,65 E–09	9,12 E–10	1,05 E–09	4,59 E–10	4,37 E–10	4,42 E–10	4,97 E–10	5,95 E–10	8,24 E–10	4,89 E–10	4,77 E–10	4,14 E–10	4,97 E–10	5,38 E–10	7,55 E–10	2,93 E–10
21 300	2,35 E–09	1,90 E–09	1,69 E–09	9,36 E–10	1,08 E–09	4,72 E–10	4,49 E–10	4,55 E–10	5,12 E–10	6,14 E–10	8,56 E–10	4,98 E–10	4,77 E–10	4,14 E–10	4,97 E–10	5,37 E–10	7,53 E–10	2,95 E–10
21 400	3,08 E–09	2,29 E–09	1,99 E–09	1,16 E–09	1,28 E–09	6,39 E–10	6,10 E–10	6,18 E–10	7,04 E–10	8,61 E–10	1,26 E–09	6,21 E–10	5,05 E–10	4,14 E–10	4,97 E–10	5,37 E–10	7,53 E–10	2,94 E–10
21 600	2,10 E–09	1,74 E–09	1,56 E–09	8,49 E–10	9,93 E–10	4,12 E–10	3,92 E–10	3,96 E–10	4,45 E–10	5,30 E–10	7,29 E–10	4,43 E–10	4,39 E–10	3,87 E–10	4,62 E–10	4,99 E–10	6,98 E–10	2,77 E–10
21 800	1,85 E–09	1,59 E–09	1,44 E–09	7,66 E–10	9,13 E–10	3,54 E–10	3,36 E–10	3,39 E–10	3,78 E–10	4,46 E–10	5,97 E–10	3,95 E–10	4,15 E–10	3,73 E–10	4,46 E–10	4,81 E–10	6,72 E–10	2,68 E–10
22 000	2,07 E–09	1,71 E–09	1,53 E–09	8,32 E–10	9,74 E–10	4,00 E–10	3,80 E–10	3,84 E–10	4,31 E–10	5,15 E–10	7,10 E–10	4,28 E–10	4,19 E–10	3,71 E–10	4,41 E–10	4,76 E–10	6,65 E–10	2,67 E–10
22 200	1,73 E–09	1,51 E–09	1,37 E–09	7,20 E–10	8,65 E–10	3,24 E–10	3,07 E–10	3,10 E–10	3,45 E–10	4,06 E–10	5,38 E–10	3,66 E–10	3,91 E–10	3,56 E–10	4,23 E–10	4,58 E–10	6,38 E–10	2,57 E–10
22 400	1,60 E–09	1,42 E–09	1,30 E–09	6,75 E–10	8,18 E–10	2,96 E–10	2,81 E–10	2,83 E–10	3,14 E–10	3,67 E–10	4,76 E–10	3,42 E–10	3,77 E–10	3,48 E–10	4,14 E–10	4,49 E–10	6,25 E–10	2,51 E–10
22 600	1,49 E–09	1,35 E–09	1,24 E–09	6,37 E–10	7,80 E–10	2,73 E–10	2,58 E–10	2,60 E–10	2,87 E–10	3,33 E–10	4,23 E–10	3,22 E–10	3,66 E–10	3,42 E–10	4,08 E–10	4,42 E–10	6,15 E–10	2,46 E–10
22 800	1,44 E–09	1,32 E–09	1,21 E–09	6,20 E–10	7,62 E–10	2,61 E–10	2,47 E–10	2,49 E–10	2,74 E–10	3,17 E–10	4,00 E–10	3,11 E–10	3,57 E–10	3,35 E–10	3,98 E–10	4,31 E–10	6,00 E–10	2,41 E–10

Продолжение таблицы 5.11

Высота, км	Плотность потока, $м^{-2} \cdot год^{-1}$																	
	2,5°	7,5°	12,5°	17,5°	22,5°	27,5°	32,5°	37,5°	42,5°	47,5°	52,5°	57,5°	62,5°	67,5°	72,5°	77,5°	82,5°	87,5°
23 000	1,50 E–09	1,35 E–09	1,24 E–09	6,38 E–10	7,78 E–10	2,74 E–10	2,60 E–10	2,62 E–10	2,90 E–10	3,37 E–10	4,34 E–10	3,19 E–10	3,56 E–10	3,32 E–10	3,95 E–10	4,27 E–10	5,94 E–10	2,40 E–10
23 200	2,39 E–09	1,86 E–09	1,64 E–09	9,19 E–10	1,04 E–09	4,75 E–10	4,52 E–10	4,58 E–10	5,19 E–10	6,30 E–10	9,10 E–10	4,72 E–10	4,04 E–10	3,48 E–10	4,13 E–10	4,47 E–10	6,21 E–10	2,51 E–10
23 400	1,96 E–09	1,60 E–09	1,43 E–09	7,77 E–10	9,04 E–10	3,78 E–10	3,60 E–10	3,64 E–10	4,09 E–10	4,91 E–10	6,85 E–10	3,96 E–10	3,74 E–10	3,35 E–10	3,99 E–10	4,32 E–10	6,00 E–10	2,41 E–10
23 500	1,82 E–09	1,51 E–09	1,35 E–09	7,31 E–10	8,57 E–10	3,50 E–10	3,32 E–10	3,36 E–10	3,77 E–10	4,49 E–10	6,19 E–10	3,73 E–10	3,64 E–10	3,30 E–10	3,93 E–10	4,27 E–10	5,92 E–10	2,37 E–10
23 600	1,66 E–09	1,42 E–09	1,28 E–09	6,80 E–10	8,10 E–10	3,10 E–10	2,94 E–10	2,97 E–10	3,32 E–10	3,93 E–10	5,29 E–10	3,41 E–10	3,50 E–10	3,23 E–10	3,84 E–10	4,15 E–10	5,76 E–10	2,33 E–10
23 700	1,62 E–09	1,40 E–09	1,26 E–09	6,66 E–10	7,96 E–10	3,01 E–10	2,85 E–10	2,88 E–10	3,21 E–10	3,79 E–10	5,09 E–10	3,33 E–10	3,45 E–10	3,18 E–10	3,78 E–10	4,09 E–10	5,67 E–10	2,30 E–10
23 800	1,56 E–09	1,36 E–09	1,23 E–09	6,47 E–10	7,76 E–10	2,90 E–10	2,75 E–10	2,77 E–10	3,09 E–10	3,64 E–10	4,85 E–10	3,23 E–10	3,39 E–10	3,15 E–10	3,74 E–10	4,04 E–10	5,61 E–10	2,27 E–10
24 000	2,50 E–09	1,45 E–09	1,26 E–09	4,61 E–10	5,45 E–10	1,72 E–10	1,59 E–10	1,59 E–10	1,72 E–10	1,94 E–10	2,28 E–10	2,10 E–10	2,59 E–10	2,52 E–10	3,02 E–10	3,23 E–10	4,43 E–10	1,78 E–10
30 000	2,35 E–09	1,26 E–09	1,08 E–09	3,59 E–10	4,11 E–10	1,34 E–10	1,24 E–10	1,24 E–10	1,34 E–10	1,50 E–10	1,75 E–10	1,64 E–10	2,03 E–10	1,97 E–10	2,40 E–10	2,52 E–10	3,37 E–10	1,32 E–10
31 000	2,72 E–09	1,35 E–09	1,14 E–09	3,48 E–10	3,87 E–10	1,30 E–10	1,19 E–10	1,19 E–10	1,28 E–10	1,44 E–10	1,67 E–10	1,56 E–10	1,93 E–10	1,87 E–10	2,29 E–10	2,41 E–10	3,21 E–10	1,24 E–10
32 000	2,66 E–09	1,28 E–09	1,07 E–09	3,17 E–10	3,47 E–10	1,20 E–10	1,10 E–10	1,09 E–10	1,18 E–10	1,33 E–10	1,55 E–10	1,44 E–10	1,78 E–10	1,71 E–10	2,10 E–10	2,22 E–10	2,97 E–10	1,13 E–10
33 000	3,56 E–09	1,56 E–09	1,28 E–09	3,22 E–10	3,31 E–10	1,18 E–10	1,08 E–10	1,06 E–10	1,14 E–10	1,28 E–10	1,49 E–10	1,37 E–10	1,68 E–10	1,62 E–10	1,99 E–10	2,11 E–10	2,84 E–10	1,06 E–10
34 000	4,09 E–09	1,69 E–09	1,37 E–09	3,05 E–10	2,93 E–10	1,13 E–10	1,02 E–10	9,98 E–11	1,08 E–10	1,20 E–10	1,41 E–10	1,27 E–10	1,55 E–10	1,50 E–10	1,86 E–10	2,00 E–10	2,69 E–10	9,64 E–11
35 000	5,28 E–09	2,09 E–09	1,68 E–09	3,29 E–10	2,96 E–10	1,13 E–10	1,01 E–10	9,71 E–11	1,05 E–10	1,16 E–10	1,36 E–10	1,21 E–10	1,47 E–10	1,41 E–10	1,74 E–10	1,87 E–10	2,52 E–10	9,23 E–11
35 500	7,41 E–09	2,81 E–09	2,22 E–09	3,69 E–10	2,95 E–10	1,20 E–10	1,04 E–10	9,88 E–11	1,06 E–10	1,17 E–10	1,37 E–10	1,19 E–10	1,42 E–10	1,37 E–10	1,70 E–10	1,84 E–10	2,48 E–10	8,85 E–11
35 600	9,83 E–09	3,63 E–09	2,86 E–09	4,30 E–10	3,16 E–10	1,31 E–10	1,11 E–10	1,04 E–10	1,12 E–10	1,22 E–10	1,43 E–10	1,22 E–10	1,44 E–10	1,39 E–10	1,72 E–10	1,87 E–10	2,52 E–10	9,01 E–11
35 700	1,27 E–08	4,60 E–09	3,61 E–09	4,99 E–10	3,38 E–10	1,41 E–10	1,18 E–10	1,08 E–10	1,15 E–10	1,25 E–10	1,47 E–10	1,21 E–10	1,42 E–10	1,37 E–10	1,69 E–10	1,82 E–10	2,46 E–10	8,91 E–11

Продолжение таблицы 5.11

Высота, км	Плотность потока, $м^{-2} \cdot год^{-1}$																	
	2,5°	7,5°	12,5°	17,5°	22,5°	27,5°	32,5°	37,5°	42,5°	47,5°	52,5°	57,5°	62,5°	67,5°	72,5°	77,5°	82,5°	87,5°
35 710	1,42 E–08	5,12 E–09	4,01 E–09	5,41 E–10	3,55 E–10	1,49 E–10	1,23 E–10	1,13 E–10	1,20 E–10	1,30 E–10	1,52 E–10	1,25 E–10	1,46 E–10	1,40 E–10	1,73 E–10	1,86 E–10	2,51 E–10	9,10 E–11
35 720	1,53 E–08	5,49 E–09	4,29 E–09	5,61 E–10	3,54 E–10	1,52 E–10	1,24 E–10	1,13 E–10	1,20 E–10	1,29 E–10	1,51 E–10	1,22 E–10	1,42 E–10	1,36 E–10	1,68 E–10	1,83 E–10	2,47 E–10	8,89 E–11
35 730	1,73 E–08	6,18 E–09	4,83 E–09	6,13 E–10	3,73 E–10	1,62 E–10	1,31 E–10	1,18 E–10	1,25 E–10	1,34 E–10	1,57 E–10	1,25 E–10	1,44 E–10	1,38 E–10	1,71 E–10	1,85 E–10	2,49 E–10	8,96 E–11
35 740	2,29 E–08	8,10 E–09	6,30 E–09	7,48 E–10	4,11 E–10	1,84 E–10	1,45 E–10	1,27 E–10	1,34 E–10	1,41 E–10	1,66 E–10	1,27 E–10	1,43 E–10	1,37 E–10	1,69 E–10	1,83 E–10	2,46 E–10	8,85 E–11
35 750	3,01 E–08	1,06 E–08	8,23 E–09	9,32 E–10	4,74 E–10	2,18 E–10	1,67 E–10	1,43 E–10	1,50 E–10	1,57 E–10	1,84 E–10	1,35 E–10	1,47 E–10	1,42 E–10	1,75 E–10	1,90 E–10	2,56 E–10	9,26 E–11
35 760	5,14 E–08	1,79 E–08	1,38 E–08	1,45 E–09	6,29 E–10	3,05 E–10	2,22 E–10	1,80 E–10	1,88 E–10	1,89 E–10	2,23 E–10	1,45 E–10	1,46 E–10	1,40 E–10	1,73 E–10	1,86 E–10	2,50 E–10	9,12 E–11
35 770	1,03 E–07	3,55 E–08	2,74 E–08	2,70 E–09	9,96 E–10	5,19 E–10	3,58 E–10	2,73 E–10	2,80 E–10	2,70 E–10	3,18 E–10	1,70 E–10	1,44 E–10	1,38 E–10	1,72 E–10	1,86 E–10	2,51 E–10	8,94 E–11
35 780	1,08 E–07	3,71 E–08	2,86 E–08	2,82 E–09	1,04 E–09	5,40 E–10	3,72 E–10	2,84 E–10	2,90 E–10	2,79 E–10	3,29 E–10	1,75 E–10	1,47 E–10	1,42 E–10	1,75 E–10	1,90 E–10	2,56 E–10	9,26 E–11
35 790	8,10 E–08	2,80 E–08	2,16 E–08	2,16 E–09	8,33 E–10	4,27 E–10	2,99 E–10	2,33 E–10	2,40 E–10	2,35 E–10	2,76 E–10	1,59 E–10	1,44 E–10	1,38 E–10	1,71 E–10	1,86 E–10	2,50 E–10	8,88 E–11
35 800	6,16 E–08	2,13 E–08	1,65 E–08	1,69 E–09	7,00 E–10	3,47 E–10	2,49 E–10	1,99 E–10	2,06 E–10	2,05 E–10	2,41 E–10	1,49 E–10	1,45 E–10	1,39 E–10	1,72 E–10	1,87 E–10	2,52 E–10	9,09 E–11
35 810	5,23 E–08	1,81 E–08	1,41 E–08	1,47 E–09	6,39 E–10	3,10 E–10	2,25 E–10	1,83 E–10	1,90 E–10	1,91 E–10	2,25 E–10	1,46 E–10	1,47 E–10	1,41 E–10	1,74 E–10	1,88 E–10	2,55 E–10	9,29 E–11
35 820	4,38 E–08	1,52 E–08	1,18 E–08	1,26 E–09	5,62 E–10	2,72 E–10	2,01 E–10	1,65 E–10	1,72 E–10	1,75 E–10	2,06 E–10	1,38 E–10	1,43 E–10	1,37 E–10	1,70 E–10	1,84 E–10	2,47 E–10	8,83 E–11
35 830	3,80 E–08	1,33 E–08	1,03 E–08	1,12 E–09	5,32 E–10	2,49 E–10	1,86 E–10	1,56 E–10	1,63 E–10	1,67 E–10	1,97 E–10	1,37 E–10	1,46 E–10	1,40 E–10	1,73 E–10	1,86 E–10	2,50 E–10	9,14 E–11
35 840	3,37 E–08	1,18 E–08	9,14 E–09	1,02 E–09	4,99 E–10	2,30 E–10	1,74 E–10	1,47 E–10	1,54 E–10	1,59 E–10	1,88 E–10	1,34 E–10	1,44 E–10	1,38 E–10	1,70 E–10	1,85 E–10	2,49 E–10	9,11 E–11
35 850	2,96 E–08	1,04 E–08	8,05 E–09	9,11 E–10	4,61 E–10	2,13 E–10	1,64 E–10	1,40 E–10	1,48 E–10	1,54 E–10	1,81 E–10	1,32 E–10	1,45 E–10	1,39 E–10	1,73 E–10	1,87 E–10	2,53 E–10	9,04 E–11
35 860	2,70 E–08	9,48 E–09	7,37 E–09	8,47 E–10	4,42 E–10	2,02 E–10	1,56 E–10	1,35 E–10	1,42 E–10	1,48 E–10	1,74 E–10	1,30 E–10	1,43 E–10	1,38 E–10	1,70 E–10	1,85 E–10	2,50 E–10	8,97 E–11
35 870	2,44 E–08	8,61 E–09	6,70 E–09	7,98 E–10	4,43 E–10	1,94 E–10	1,53 E–10	1,33 E–10	1,41 E–10	1,48 E–10	1,74 E–10	1,33 E–10	1,50 E–10	1,44 E–10	1,77 E–10	1,91 E–10	2,58 E–10	9,49 E–11

Окончание таблицы 5.11

Высота, км	Плотность потока, $м^{-2} \cdot год^{-1}$																	
	2,5°	7,5°	12,5°	17,5°	22,5°	27,5°	32,5°	37,5°	42,5°	47,5°	52,5°	57,5°	62,5°	67,5°	72,5°	77,5°	82,5°	87,5°
35 880	2,32 E–08	8,16 E–09	6,35 E–09	7,48 E–10	4,06 E–10	1,85 E–10	1,45 E–10	1,27 E–10	1,34 E–10	1,41 E–10	1,66 E–10	1,27 E–10	1,42 E–10	1,36 E–10	1,69 E–10	1,84 E–10	2,48 E–10	8,78 E–11
35 890	2,29 E–08	8,07 E–09	6,28 E–09	7,47 E–10	4,14 E–10	1,83 E–10	1,44 E–10	1,26 E–10	1,33 E–10	1,40 E–10	1,65 E–10	1,25 E–10	1,41 E–10	1,35 E–10	1,66 E–10	1,79 E–10	2,41 E–10	8,82 E–11
35 900	1,83 E–08	6,50 E–09	5,06 E–09	6,23 E–10	3,61 E–10	1,62 E–10	1,30 E–10	1,15 E–10	1,22 E–10	1,30 E–10	1,53 E–10	1,20 E–10	1,37 E–10	1,32 E–10	1,64 E–10	1,78 E–10	2,39 E–10	8,44 E–11
36 000	1,72 E–08	6,13 E–09	4,78 E–09	6,05 E–10	3,65 E–10	1,58 E–10	1,28 E–10	1,15 E–10	1,22 E–10	1,30 E–10	1,53 E–10	1,21 E–10	1,39 E–10	1,34 E–10	1,65 E–10	1,78 E–10	2,41 E–10	8,70 E–11
36 100	1,60 E–08	5,70 E–09	4,45 E–09	5,62 E–10	3,37 E–10	1,50 E–10	1,22 E–10	1,09 E–10	1,16 E–10	1,24 E–10	1,46 E–10	1,16 E–10	1,34 E–10	1,28 E–10	1,60 E–10	1,74 E–10	2,34 E–10	8,21 E–11
36 200	1,18 E–08	4,27 E–09	3,34 E–09	4,59 E–10	3,06 E–10	1,32 E–10	1,10 E–10	1,01 E–10	1,07 E–10	1,17 E–10	1,37 E–10	1,13 E–10	1,32 E–10	1,27 E–10	1,57 E–10	1,71 E–10	2,31 E–10	8,16 E–11
36 300	9,75 E–09	3,55 E–09	2,79 E–09	4,07 E–10	2,89 E–10	1,22 E–10	1,03 E–10	9,62 E–11	1,03 E–10	1,12 E–10	1,32 E–10	1,11 E–10	1,31 E–10	1,25 E–10	1,56 E–10	1,70 E–10	2,29 E–10	8,10 E–11
36 400	7,71 E–09	2,86 E–09	2,26 E–09	3,58 E–10	2,76 E–10	1,12 E–10	9,63 E–11	9,07 E–11	9,72 E–11	1,07 E–10	1,25 E–10	1,07 E–10	1,28 E–10	1,22 E–10	1,51 E–10	1,64 E–10	2,22 E–10	7,98 E–11
36 500	4,40 E–09	1,71 E–09	1,37 E–09	2,63 E–10	2,32 E–10	9,26 E–11	8,21 E–11	7,92 E–11	8,52 E–11	9,48 E–11	1,11 E–10	9,79 E–11	1,19 E–10	1,13 E–10	1,40 E–10	1,53 E–10	2,07 E–10	7,38 E–11
37 000	2,48 E–09	1,03 E–09	8,31 E–10	1,92 E–10	1,85 E–10	7,40 E–11	6,69 E–11	6,53 E–11	7,05 E–11	7,90 E–11	9,31 E–11	8,25 E–11	1,01 E–10	9,54 E–11	1,18 E–10	1,30 E–10	1,77 E–10	6,23 E–11
38 000	1,53 E–09	6,77 E–10	5,52 E–10	1,45 E–10	1,48 E–10	5,90 E–11	5,38 E–11	5,28 E–11	5,70 E–11	6,42 E–11	7,58 E–11	6,73 E–11	8,22 E–11	7,73 E–11	9,53 E–11	1,06 E–10	1,46 E–10	5,13 E–11
39 000	1,01 E–09	4,77 E–10	3,91 E–10	1,14 E–10	1,19 E–10	4,79 E–11	4,38 E–11	4,31 E–11	4,65 E–11	5,25 E–11	6,23 E–11	5,51 E–11	6,73 E–11	6,25 E–11	7,71 E–11	8,62 E–11	1,19 E–10	4,14 E–11

Таблица 5.12 — Плотность потока КО размером более 20 см относительно ИСК

Высота, км	Плотность потока, $м^{-2} \cdot год^{-1}$																	
	2,5°	7,5°	12,5°	17,5°	22,5°	27,5°	32,5°	37,5°	42,5°	47,5°	52,5°	57,5°	62,5°	67,5°	72,5°	77,5°	82,5°	87,5°
200	7,20 E–07	7,20 E–07	7,57 E–07	7,57 E–07	7,88 E–07	7,66 E–07	7,37 E–07	7,54 E–07	8,36 E–07	9,51 E–07	1,07 E–06	9,76 E–07	1,21 E–06	1,28 E–06	1,76 E–06	1,96 E–06	2,89 E–06	7,38 E–07
300	1,50 E–06	1,50 E–06	1,57 E–06	1,57 E–06	1,64 E–06	1,59 E–06	1,53 E–06	1,57 E–06	1,74 E–06	1,98 E–06	2,23 E–06	2,03 E–06	2,51 E–06	2,66 E–06	3,66 E–06	4,07 E–06	6,01 E–06	1,53 E–06

Продолжение таблицы 5.12

Высота, км	Плотность потока, $м^{-2} \cdot год^{-1}$																	
	2,5°	7,5°	12,5°	17,5°	22,5°	27,5°	32,5°	37,5°	42,5°	47,5°	52,5°	57,5°	62,5°	67,5°	72,5°	77,5°	82,5°	87,5°
400	3,03 E–06	3,03 E–06	3,18 E–06	3,18 E–06	3,31 E–06	3,22 E–06	3,10 E–06	3,17 E–06	3,51 E–06	4,00 E–06	4,50 E–06	4,10 E–06	5,07 E–06	5,38 E–06	7,39 E–06	8,23 E–06	1,21 E–05	3,10 E–06
500	4,38 E–06	4,38 E–06	4,60 E–06	4,60 E–06	4,79 E–06	4,66 E–06	4,48 E–06	4,59 E–06	5,08 E–06	5,78 E–06	6,51 E–06	5,93 E–06	7,33 E–06	7,79 E–06	1,07 E–05	1,19 E–05	1,76 E–05	4,49 E–06
600	5,00 E–06	5,00 E–06	5,26 E–06	5,26 E–06	5,47 E–06	5,32 E–06	5,12 E–06	5,24 E–06	5,81 E–06	6,61 E–06	7,44 E–06	6,78 E–06	8,38 E–06	8,90 E–06	1,22 E–05	1,36 E–05	2,01 E–05	5,13 E–06
700	6,33 E–06	6,33 E–06	6,66 E–06	6,66 E–06	6,93 E–06	6,74 E–06	6,48 E–06	6,63 E–06	7,36 E–06	8,36 E–06	9,42 E–06	8,59 E–06	1,06 E–05	1,13 E–05	1,55 E–05	1,72 E–05	2,54 E–05	6,49 E–06
800	5,80 E–06	5,80 E–06	5,99 E–06	5,99 E–06	6,23 E–06	6,20 E–06	6,13 E–06	6,39 E–06	7,03 E–06	7,85 E–06	8,73 E–06	9,27 E–06	1,17 E–05	1,22 E–05	1,57 E–05	2,08 E–05	2,82 E–05	6,97 E–06
900	3,95 E–06	3,95 E–06	4,05 E–06	4,05 E–06	4,21 E–06	4,23 E–06	4,22 E–06	4,44 E–06	4,87 E–06	5,40 E–06	5,98 E–06	6,68 E–06	8,44 E–06	8,82 E–06	1,11 E–05	1,54 E–05	2,05 E–05	5,01 E–06
1000	2,23 E–06	2,23 E–06	2,29 E–06	2,29 E–06	2,38 E–06	2,39 E–06	2,39 E–06	2,51 E–06	2,75 E–06	3,06 E–06	3,38 E–06	3,79 E–06	4,79 E–06	5,00 E–06	6,28 E–06	8,76 E–06	1,16 E–05	2,84 E–06
1100	1,30 E–06	1,30 E–06	1,34 E–06	1,34 E–06	1,39 E–06	1,40 E–06	1,39 E–06	1,46 E–06	1,60 E–06	1,78 E–06	1,97 E–06	2,19 E–06	2,77 E–06	2,90 E–06	3,65 E–06	5,06 E–06	6,73 E–06	1,65 E–06
1200	9,72 E–07	9,72 E–07	9,97 E–07	9,97 E–07	1,04 E–06	1,04 E–06	1,04 E–06	1,09 E–06	1,20 E–06	1,33 E–06	1,47 E–06	1,65 E–06	2,08 E–06	2,18 E–06	2,73 E–06	3,81 E–06	5,06 E–06	1,24 E–06
1300	9,82 E–07	9,82 E–07	1,01 E–06	1,01 E–06	1,03 E–06	1,03 E–06	1,04 E–06	1,11 E–06	1,22 E–06	1,37 E–06	1,53 E–06	1,65 E–06	2,05 E–06	2,22 E–06	3,10 E–06	3,24 E–06	3,40 E–06	7,08 E–07
1400	1,59 E–06	1,59 E–06	1,63 E–06	1,63 E–06	1,66 E–06	1,63 E–06	1,68 E–06	1,79 E–06	1,98 E–06	2,26 E–06	2,54 E–06	2,67 E–06	3,27 E–06	3,64 E–06	5,44 E–06	4,50 E–06	3,41 E–06	4,83 E–07
1500	8,74 E–07	8,74 E–07	8,98 E–07	8,98 E–07	9,14 E–07	8,97 E–07	9,25 E–07	9,85 E–07	1,09 E–06	1,24 E–06	1,39 E–06	1,46 E–06	1,79 E–06	1,99 E–06	2,97 E–06	2,47 E–06	1,92 E–06	2,81 E–07
1600	3,93 E–07	3,93 E–07	4,04 E–07	4,04 E–07	4,12 E–07	4,06 E–07	4,15 E–07	4,41 E–07	4,87 E–07	5,53 E–07	6,21 E–07	6,50 E–07	7,99 E–07	8,82 E–07	1,30 E–06	1,14 E–06	9,91 E–07	1,70 E–07
1700	2,32 E–07	2,32 E–07	2,39 E–07	2,39 E–07	2,44 E–07	2,40 E–07	2,45 E–07	2,59 E–07	2,86 E–07	3,25 E–07	3,64 E–07	3,80 E–07	4,68 E–07	5,14 E–07	7,49 E–07	6,83 E–07	6,35 E–07	1,18 E–07
1800	1,82 E–07	1,82 E–07	1,88 E–07	1,88 E–07	1,92 E–07	1,89 E–07	1,93 E–07	2,04 E–07	2,25 E–07	2,56 E–07	2,87 E–07	3,00 E–07	3,68 E–07	4,05 E–07	5,92 E–07	5,35 E–07	4,91 E–07	8,97 E–08
1900	1,37 E–07	1,37 E–07	1,41 E–07	1,41 E–07	1,44 E–07	1,41 E–07	1,44 E–07	1,53 E–07	1,69 E–07	1,92 E–07	2,15 E–07	2,24 E–07	2,75 E–07	3,03 E–07	4,42 E–07	3,99 E–07	3,68 E–07	6,75 E–08
2000	2,34 E–08	2,13 E–08	2,34 E–08	2,13 E–08	2,28 E–08	1,97 E–08	1,94 E–08	2,02 E–08	2,23 E–08	2,52 E–08	2,83 E–08	2,79 E–08	3,46 E–08	3,70 E–08	5,11 E–08	5,44 E–08	6,87 E–08	1,67 E–08

Продолжение таблицы 5.12

Высота, км	Плотность потока, $м^{-2} \cdot год^{-1}$																	
	2,5°	7,5°	12,5°	17,5°	22,5°	27,5°	32,5°	37,5°	42,5°	47,5°	52,5°	57,5°	62,5°	67,5°	72,5°	77,5°	82,5°	87,5°
4000	1,23 E–08	1,19 E–08	1,13 E–08	6,34 E–09	7,95 E–09	3,05 E–09	2,92 E–09	2,98 E–09	3,27 E–09	3,68 E–09	4,16 E–09	4,06 E–09	5,10 E–09	5,26 E–09	6,60 E–09	7,23 E–09	1,02 E–08	3,49 E–09
9000	4,11 E–09	3,85 E–09	3,55 E–09	1,91 E–09	2,36 E–09	9,30 E–10	8,80 E–10	8,91 E–10	9,72 E–10	1,09 E–09	1,24 E–09	1,19 E–09	1,50 E–09	1,54 E–09	1,94 E–09	2,13 E–09	3,04 E–09	1,03 E–09
18 000	3,67 E–09	3,29 E–09	2,96 E–09	1,70 E–09	2,00 E–09	9,33 E–10	9,03 E–10	9,36 E–10	1,01 E–09	1,15 E–09	1,36 E–09	1,45 E–09	2,07 E–09	1,05 E–09	1,21 E–09	1,32 E–09	1,88 E–09	6,71 E–10
19 000	1,52 E–08	1,08 E–08	8,89 E–09	7,20 E–09	7,09 E–09	5,89 E–09	5,91 E–09	6,37 E–09	6,84 E–09	7,94 E–09	9,84 E–09	1,15 E–08	1,84 E–08	2,15 E–09	1,29 E–09	1,40 E–09	1,99 E–09	7,23 E–10
19 100	1,70 E–08	1,20 E–08	9,77 E–09	8,05 E–09	7,86 E–09	6,67 E–09	6,71 E–09	7,23 E–09	7,77 E–09	9,01 E–09	1,12 E–08	1,32 E–08	2,10 E–08	2,30 E–09	1,26 E–09	1,38 E–09	1,95 E–09	7,10 E–10
19 200	9,63 E–09	7,19 E–09	6,03 E–09	4,55 E–09	4,64 E–09	3,49 E–09	3,50 E–09	3,75 E–09	4,03 E–09	4,66 E–09	5,75 E–09	6,68 E–09	1,05 E–08	1,59 E–09	1,21 E–09	1,31 E–09	1,86 E–09	6,79 E–10
19 300	5,67 E–09	4,60 E–09	3,99 E–09	2,66 E–09	2,89 E–09	1,79 E–09	1,78 E–09	1,88 E–09	2,03 E–09	2,34 E–09	2,85 E–09	3,23 E–09	4,96 E–09	1,20 E–09	1,16 E–09	1,26 E–09	1,79 E–09	6,53 E–10
19 400	3,99 E–09	3,45 E–09	3,07 E–09	1,86 E–09	2,13 E–09	1,10 E–09	1,08 E–09	1,13 E–09	1,22 E–09	1,40 E–09	1,67 E–09	1,84 E–09	2,74 E–09	9,93 E–10	1,07 E–09	1,17 E–09	1,66 E–09	6,07 E–10
19 600	3,63 E–09	3,22 E–09	2,89 E–09	1,69 E–09	1,97 E–09	9,46 E–10	9,21 E–10	9,61 E–10	1,04 E–09	1,19 E–09	1,41 E–09	1,54 E–09	2,25 E–09	9,41 E–10	1,04 E–09	1,13 E–09	1,61 E–09	5,94 E–10
19 800	4,21 E–09	3,60 E–09	3,19 E–09	1,97 E–09	2,23 E–09	1,19 E–09	1,17 E–09	1,23 E–09	1,33 E–09	1,53 E–09	1,84 E–09	2,05 E–09	3,07 E–09	9,92 E–10	1,04 E–09	1,13 E–09	1,60 E–09	5,94 E–10
20 000	4,77 E–09	3,81 E–09	3,34 E–09	2,00 E–09	2,24 E–09	1,16 E–09	1,12 E–09	1,16 E–09	1,28 E–09	1,51 E–09	2,01 E–09	1,56 E–09	1,97 E–09	8,98 E–10	1,01 E–09	1,10 E–09	1,55 E–09	5,80 E–10
20 100	4,59 E–09	3,65 E–09	3,21 E–09	1,86 E–09	2,11 E–09	1,02 E–09	9,77 E–10	9,98 E–10	1,12 E–09	1,33 E–09	1,83 E–09	1,19 E–09	1,30 E–09	8,40 E–10	9,93 E–10	1,08 E–09	1,52 E–09	5,71 E–10
20 200	3,60 E–09	3,06 E–09	2,75 E–09	1,52 E–09	1,79 E–09	7,69 E–10	7,34 E–10	7,48 E–10	8,30 E–10	9,75 E–10	1,28 E–09	9,33 E–10	1,08 E–09	7,96 E–10	9,51 E–10	1,03 E–09	1,46 E–09	5,47 E–10
20 300	3,26 E–09	2,85 E–09	2,58 E–09	1,40 E–09	1,67 E–09	6,81 E–10	6,49 E–10	6,60 E–10	7,29 E–10	8,49 E–10	1,09 E–09	8,39 E–10	9,92 E–10	7,77 E–10	9,32 E–10	1,01 E–09	1,43 E–09	5,37 E–10
20 400	4,29 E–09	3,43 E–09	3,03 E–09	1,72 E–09	1,96 E–09	9,05 E–10	8,63 E–10	8,77 E–10	9,85 E–10	1,18 E–09	1,63 E–09	9,87 E–10	9,91 E–10	7,82 E–10	9,40 E–10	1,02 E–09	1,44 E–09	5,44 E–10
20 600	3,31 E–09	2,85 E–09	2,57 E–09	1,39 E–09	1,65 E–09	6,71 E–10	6,38 E–10	6,46 E–10	7,19 E–10	8,45 E–10	1,11 E–09	7,77 E–10	8,54 E–10	7,32 E–10	8,82 E–10	9,55 E–10	1,34 E–09	5,13 E–10
20 800	3,12 E–09	2,73 E–09	2,48 E–09	1,32 E–09	1,59 E–09	6,19 E–10	5,87 E–10	5,95 E–10	6,60 E–10	7,72 E–10	1,00 E–09	7,22 E–10	8,05 E–10	7,10 E–10	8,55 E–10	9,24 E–10	1,30 E–09	5,01 E–10

Продолжение таблицы 5.12

Высота, км	Плотность потока, $м^{-2} \cdot год^{-1}$																	
	2,5°	7,5°	12,5°	17,5°	22,5°	27,5°	32,5°	37,5°	42,5°	47,5°	52,5°	57,5°	62,5°	67,5°	72,5°	77,5°	82,5°	87,5°
21 000	3,28 E–09	2,82 E–09	2,54 E–09	1,37 E–09	1,63 E–09	6,49 E–10	6,16 E–10	6,24 E–10	6,95 E–10	8,19 E–10	1,09 E–09	7,37 E–10	7,91 E–10	6,96 E–10	8,36 E–10	9,04 E–10	1,27 E–09	4,93 E–10
21 100	3,54 E–09	2,96 E–09	2,65 E–09	1,45 E–09	1,70 E–09	7,07 E–10	6,72 E–10	6,80 E–10	7,61 E–10	9,04 E–10	1,23 E–09	7,77 E–10	7,96 E–10	6,97 E–10	8,38 E–10	9,05 E–10	1,27 E–09	4,94 E–10
21 200	3,79 E–09	3,08 E–09	2,74 E–09	1,52 E–09	1,76 E–09	7,64 E–10	7,28 E–10	7,37 E–10	8,28 E–10	9,91 E–10	1,37 E–09	8,16 E–10	7,95 E–10	6,90 E–10	8,29 E–10	8,97 E–10	1,26 E–09	4,89 E–10
21 300	3,91 E–09	3,16 E–09	2,81 E–09	1,56 E–09	1,80 E–09	7,87 E–10	7,49 E–10	7,58 E–10	8,53 E–10	1,02 E–09	1,43 E–09	8,31 E–10	7,95 E–10	6,90 E–10	8,28 E–10	8,94 E–10	1,25 E–09	4,91 E–10
21 400	5,13 E–09	3,82 E–09	3,32 E–09	1,93 E–09	2,13 E–09	1,07 E–09	1,02 E–09	1,03 E–09	1,17 E–09	1,44 E–09	2,10 E–09	1,04 E–09	8,42 E–10	6,90 E–10	8,28 E–10	8,95 E–10	1,25 E–09	4,90 E–10
21 600	3,51 E–09	2,90 E–09	2,60 E–09	1,42 E–09	1,66 E–09	6,87 E–10	6,53 E–10	6,60 E–10	7,41 E–10	8,84 E–10	1,22 E–09	7,39 E–10	7,31 E–10	6,44 E–10	7,70 E–10	8,31 E–10	1,16 E–09	4,62 E–10
21 800	3,09 E–09	2,65 E–09	2,40 E–09	1,28 E–09	1,52 E–09	5,89 E–10	5,59 E–10	5,65 E–10	6,30 E–10	7,44 E–10	9,94 E–10	6,58 E–10	6,91 E–10	6,22 E–10	7,43 E–10	8,02 E–10	1,12 E–09	4,47 E–10
22 000	3,44 E–09	2,85 E–09	2,56 E–09	1,39 E–09	1,62 E–09	6,66 E–10	6,33 E–10	6,40 E–10	7,19 E–10	8,58 E–10	1,18 E–09	7,13 E–10	6,98 E–10	6,18 E–10	7,36 E–10	7,94 E–10	1,11 E–09	4,46 E–10
22 200	2,88 E–09	2,51 E–09	2,28 E–09	1,20 E–09	1,44 E–09	5,40 E–10	5,12 E–10	5,17 E–10	5,76 E–10	6,77 E–10	8,96 E–10	6,10 E–10	6,51 E–10	5,93 E–10	7,06 E–10	7,63 E–10	1,06 E–09	4,28 E–10
22 400	2,66 E–09	2,37 E–09	2,16 E–09	1,12 E–09	1,36 E–09	4,94 E–10	4,68 E–10	4,72 E–10	5,23 E–10	6,11 E–10	7,94 E–10	5,71 E–10	6,29 E–10	5,80 E–10	6,91 E–10	7,48 E–10	1,04 E–09	4,18 E–10
22 600	2,48 E–09	2,25 E–09	2,06 E–09	1,06 E–09	1,30 E–09	4,55 E–10	4,30 E–10	4,34 E–10	4,79 E–10	5,56 E–10	7,06 E–10	5,37 E–10	6,11 E–10	5,70 E–10	6,80 E–10	7,36 E–10	1,03 E–09	4,10 E–10
22 800	2,40 E–09	2,20 E–09	2,02 E–09	1,03 E–09	1,27 E–09	4,35 E–10	4,11 E–10	4,15 E–10	4,57 E–10	5,28 E–10	6,66 E–10	5,18 E–10	5,95 E–10	5,58 E–10	6,64 E–10	7,19 E–10	9,99 E–10	4,02 E–10
23 000	2,50 E–09	2,26 E–09	2,06 E–09	1,06 E–09	1,30 E–09	4,57 E–10	4,33 E–10	4,37 E–10	4,83 E–10	5,62 E–10	7,24 E–10	5,32 E–10	5,93 E–10	5,54 E–10	6,58 E–10	7,12 E–10	9,90 E–10	4,00 E–10
23 200	3,98 E–09	3,10 E–09	2,73 E–09	1,53 E–09	1,73 E–09	7,91 E–10	7,54 E–10	7,63 E–10	8,65 E–10	1,05 E–09	1,52 E–09	7,87 E–10	6,73 E–10	5,79 E–10	6,88 E–10	7,45 E–10	1,03 E–09	4,18 E–10
23 400	3,26 E–09	2,67 E–09	2,38 E–09	1,30 E–09	1,51 E–09	6,31 E–10	6,00 E–10	6,06 E–10	6,82 E–10	8,18 E–10	1,14 E–09	6,60 E–10	6,24 E–10	5,59 E–10	6,65 E–10	7,20 E–10	1,00 E–09	4,02 E–10
23 500	3,03 E–09	2,52 E–09	2,26 E–09	1,22 E–09	1,43 E–09	5,83 E–10	5,53 E–10	5,59 E–10	6,28 E–10	7,49 E–10	1,03 E–09	6,22 E–10	6,07 E–10	5,50 E–10	6,56 E–10	7,11 E–10	9,87 E–10	3,95 E–10
23 600	2,76 E–09	2,37 E–09	2,14 E–09	1,13 E–09	1,35 E–09	5,17 E–10	4,91 E–10	4,96 E–10	5,53 E–10	6,54 E–10	8,82 E–10	5,69 E–10	5,84 E–10	5,38 E–10	6,40 E–10	6,92 E–10	9,60 E–10	3,88 E–10

Продолжение таблицы 5.12

Высота, км	Плотность потока, $м^{-2} \cdot год^{-1}$																	
	2,5°	7,5°	12,5°	17,5°	22,5°	27,5°	32,5°	37,5°	42,5°	47,5°	52,5°	57,5°	62,5°	67,5°	72,5°	77,5°	82,5°	87,5°
23 700	2,70 E–09	2,33 E–09	2,11 E–09	1,11 E–09	1,33 E–09	5,02 E–10	4,76 E–10	4,80 E–10	5,35 E–10	6,32 E–10	8,48 E–10	5,55 E–10	5,74 E–10	5,31 E–10	6,31 E–10	6,82 E–10	9,46 E–10	3,83 E–10
23 800	2,61 E–09	2,27 E–09	2,05 E–09	1,08 E–09	1,29 E–09	4,83 E–10	4,58 E–10	4,62 E–10	5,15 E–10	6,06 E–10	8,08 E–10	5,39 E–10	5,65 E–10	5,24 E–10	6,23 E–10	6,74 E–10	9,34 E–10	3,78 E–10
24 000	4,16 E–09	2,41 E–09	2,10 E–09	7,69 E–10	9,08 E–10	2,86 E–10	2,66 E–10	2,65 E–10	2,87 E–10	3,24 E–10	3,80 E–10	3,50 E–10	4,32 E–10	4,20 E–10	5,03 E–10	5,39 E–10	7,39 E–10	2,97 E–10
30 000	3,92 E–09	2,10 E–09	1,79 E–09	5,98 E–10	6,85 E–10	2,23 E–10	2,07 E–10	2,06 E–10	2,23 E–10	2,50 E–10	2,91 E–10	2,73 E–10	3,38 E–10	3,29 E–10	4,00 E–10	4,21 E–10	5,62 E–10	2,21 E–10
31 000	4,53 E–09	2,25 E–09	1,90 E–09	5,79 E–10	6,45 E–10	2,16 E–10	1,99 E–10	1,98 E–10	2,14 E–10	2,40 E–10	2,79 E–10	2,60 E–10	3,22 E–10	3,12 E–10	3,81 E–10	4,01 E–10	5,35 E–10	2,07 E–10
32 000	4,43 E–09	2,14 E–09	1,79 E–09	5,29 E–10	5,79 E–10	2,00 E–10	1,84 E–10	1,82 E–10	1,97 E–10	2,21 E–10	2,58 E–10	2,39 E–10	2,96 E–10	2,86 E–10	3,50 E–10	3,70 E–10	4,95 E–10	1,88 E–10
33 000	5,93 E–09	2,61 E–09	2,14 E–09	5,37 E–10	5,51 E–10	1,97 E–10	1,79 E–10	1,76 E–10	1,91 E–10	2,13 E–10	2,49 E–10	2,28 E–10	2,80 E–10	2,70 E–10	3,32 E–10	3,52 E–10	4,73 E–10	1,77 E–10
34 000	6,81 E–09	2,82 E–09	2,28 E–09	5,08 E–10	4,88 E–10	1,88 E–10	1,70 E–10	1,66 E–10	1,80 E–10	2,01 E–10	2,34 E–10	2,11 E–10	2,58 E–10	2,50 E–10	3,10 E–10	3,33 E–10	4,48 E–10	1,61 E–10
35 000	8,80 E–09	3,49 E–09	2,80 E–09	5,48 E–10	4,93 E–10	1,89 E–10	1,68 E–10	1,62 E–10	1,74 E–10	1,94 E–10	2,27 E–10	2,01 E–10	2,45 E–10	2,35 E–10	2,90 E–10	3,12 E–10	4,21 E–10	1,54 E–10
35 500	1,24 E–08	4,68 E–09	3,70 E–09	6,15 E–10	4,92 E–10	2,00 E–10	1,73 E–10	1,65 E–10	1,77 E–10	1,95 E–10	2,29 E–10	1,98 E–10	2,37 E–10	2,28 E–10	2,83 E–10	3,06 E–10	4,13 E–10	1,47 E–10
35 600	1,64 E–08	6,05 E–09	4,76 E–09	7,17 E–10	5,27 E–10	2,18 E–10	1,86 E–10	1,74 E–10	1,86 E–10	2,04 E–10	2,39 E–10	2,03 E–10	2,41 E–10	2,31 E–10	2,87 E–10	3,11 E–10	4,20 E–10	1,50 E–10
35 700	2,11 E–08	7,67 E–09	6,01 E–09	8,32 E–10	5,63 E–10	2,35 E–10	1,96 E–10	1,80 E–10	1,92 E–10	2,08 E–10	2,44 E–10	2,02 E–10	2,37 E–10	2,28 E–10	2,81 E–10	3,04 E–10	4,11 E–10	1,49 E–10
35 710	2,36 E–08	8,54 E–09	6,69 E–09	9,01 E–10	5,92 E–10	2,49 E–10	2,05 E–10	1,88 E–10	2,00 E–10	2,16 E–10	2,54 E–10	2,08 E–10	2,43 E–10	2,33 E–10	2,88 E–10	3,11 E–10	4,18 E–10	1,52 E–10
35 720	2,54 E–08	9,15 E–09	7,15 E–09	9,35 E–10	5,90 E–10	2,54 E–10	2,07 E–10	1,88 E–10	2,00 E–10	2,15 E–10	2,52 E–10	2,04 E–10	2,37 E–10	2,27 E–10	2,81 E–10	3,05 E–10	4,12 E–10	1,48 E–10
35 730	2,88 E–08	1,03 E–08	8,04 E–09	1,02 E–09	6,21 E–10	2,70 E–10	2,18 E–10	1,96 E–10	2,08 E–10	2,23 E–10	2,61 E–10	2,09 E–10	2,40 E–10	2,31 E–10	2,86 E–10	3,09 E–10	4,16 E–10	1,49 E–10
35 740	3,81 E–08	1,35 E–08	1,05 E–08	1,25 E–09	6,85 E–10	3,07 E–10	2,41 E–10	2,11 E–10	2,23 E–10	2,35 E–10	2,77 E–10	2,11 E–10	2,38 E–10	2,28 E–10	2,82 E–10	3,05 E–10	4,10 E–10	1,48 E–10
35 750	5,02 E–08	1,76 E–08	1,37 E–08	1,55 E–09	7,91 E–10	3,63 E–10	2,78 E–10	2,38 E–10	2,50 E–10	2,61 E–10	3,07 E–10	2,24 E–10	2,46 E–10	2,36 E–10	2,92 E–10	3,16 E–10	4,27 E–10	1,54 E–10

Продолжение таблицы 5.12

Высота, км	Плотность потока, $м^{-2} \cdot год^{-1}$																	
	2,5°	7,5°	12,5°	17,5°	22,5°	27,5°	32,5°	37,5°	42,5°	47,5°	52,5°	57,5°	62,5°	67,5°	72,5°	77,5°	82,5°	87,5°
35 760	8,57 E–08	2,98 E–08	2,30 E–08	2,41 E–09	1,05 E–09	5,08 E–10	3,70 E–10	3,01 E–10	3,13 E–10	3,15 E–10	3,71 E–10	2,41 E–10	2,43 E–10	2,33 E–10	2,88 E–10	3,10 E–10	4,17 E–10	1,52 E–10
35 770	1,72 E–07	5,91 E–08	4,57 E–08	4,49 E–09	1,66 E–09	8,66 E–10	5,97 E–10	4,56 E–10	4,66 E–10	4,50 E–10	5,30 E–10	2,84 E–10	2,40 E–10	2,31 E–10	2,86 E–10	3,10 E–10	4,18 E–10	1,49 E–10
35 780	1,79 E–07	6,18 E–08	4,77 E–08	4,69 E–09	1,73 E–09	9,01 E–10	6,20 E–10	4,73 E–10	4,83 E–10	4,65 E–10	5,49 E–10	2,92 E–10	2,46 E–10	2,36 E–10	2,91 E–10	3,16 E–10	4,27 E–10	1,54 E–10
35 790	1,35 E–07	4,66 E–08	3,60 E–08	3,60 E–09	1,39 E–09	7,12 E–10	4,99 E–10	3,89 E–10	4,00 E–10	3,91 E–10	4,61 E–10	2,64 E–10	2,39 E–10	2,30 E–10	2,86 E–10	3,10 E–10	4,17 E–10	1,48 E–10
35 800	1,03 E–07	3,55 E–08	2,75 E–08	2,82 E–09	1,17 E–09	5,79 E–10	4,15 E–10	3,31 E–10	3,43 E–10	3,41 E–10	4,02 E–10	2,49 E–10	2,42 E–10	2,32 E–10	2,87 E–10	3,11 E–10	4,20 E–10	1,51 E–10
35 810	8,71 E–08	3,02 E–08	2,34 E–08	2,45 E–09	1,06 E–09	5,16 E–10	3,75 E–10	3,05 E–10	3,17 E–10	3,19 E–10	3,75 E–10	2,43 E–10	2,45 E–10	2,36 E–10	2,90 E–10	3,14 E–10	4,25 E–10	1,55 E–10
35 820	7,31 E–08	2,54 E–08	1,97 E–08	2,09 E–09	9,37 E–10	4,53 E–10	3,34 E–10	2,75 E–10	2,87 E–10	2,92 E–10	3,43 E–10	2,30 E–10	2,38 E–10	2,28 E–10	2,83 E–10	3,06 E–10	4,12 E–10	1,47 E–10
35 830	6,33 E–08	2,21 E–08	1,71 E–08	1,87 E–09	8,87 E–10	4,15 E–10	3,11 E–10	2,60 E–10	2,72 E–10	2,79 E–10	3,28 E–10	2,29 E–10	2,43 E–10	2,33 E–10	2,88 E–10	3,10 E–10	4,17 E–10	1,52 E–10
35 840	5,61 E–08	1,96 E–08	1,52 E–08	1,69 E–09	8,32 E–10	3,84 E–10	2,90 E–10	2,45 E–10	2,57 E–10	2,66 E–10	3,13 E–10	2,23 E–10	2,41 E–10	2,31 E–10	2,84 E–10	3,08 E–10	4,15 E–10	1,52 E–10
35 850	4,93 E–08	1,73 E–08	1,34 E–08	1,52 E–09	7,68 E–10	3,56 E–10	2,73 E–10	2,34 E–10	2,46 E–10	2,56 E–10	3,01 E–10	2,21 E–10	2,42 E–10	2,32 E–10	2,88 E–10	3,12 E–10	4,22 E–10	1,51 E–10
35 860	4,50 E–08	1,58 E–08	1,23 E–08	1,41 E–09	7,37 E–10	3,36 E–10	2,60 E–10	2,24 E–10	2,36 E–10	2,47 E–10	2,91 E–10	2,16 E–10	2,39 E–10	2,29 E–10	2,83 E–10	3,08 E–10	4,16 E–10	1,50 E–10
35 870	4,07 E–08	1,44 E–08	1,12 E–08	1,33 E–09	7,39 E–10	3,24 E–10	2,54 E–10	2,22 E–10	2,35 E–10	2,47 E–10	2,91 E–10	2,22 E–10	2,50 E–10	2,40 E–10	2,95 E–10	3,18 E–10	4,30 E–10	1,58 E–10
35 880	3,86 E–08	1,36 E–08	1,06 E–08	1,25 E–09	6,76 E–10	3,08 E–10	2,42 E–10	2,12 E–10	2,23 E–10	2,36 E–10	2,77 E–10	2,11 E–10	2,36 E–10	2,27 E–10	2,82 E–10	3,06 E–10	4,14 E–10	1,46 E–10
35 890	3,81 E–08	1,34 E–08	1,05 E–08	1,25 E–09	6,90 E–10	3,05 E–10	2,39 E–10	2,09 E–10	2,21 E–10	2,33 E–10	2,74 E–10	2,09 E–10	2,35 E–10	2,25 E–10	2,77 E–10	2,99 E–10	4,02 E–10	1,47 E–10
35 900	3,06 E–08	1,08 E–08	8,43 E–09	1,04 E–09	6,02 E–10	2,70 E–10	2,16 E–10	1,92 E–10	2,04 E–10	2,17 E–10	2,56 E–10	2,01 E–10	2,29 E–10	2,20 E–10	2,73 E–10	2,97 E–10	3,99 E–10	1,41 E–10
36 000	2,87 E–08	1,02 E–08	7,97 E–09	1,01 E–09	6,09 E–10	2,64 E–10	2,13 E–10	1,91 E–10	2,03 E–10	2,17 E–10	2,55 E–10	2,02 E–10	2,32 E–10	2,23 E–10	2,75 E–10	2,97 E–10	4,01 E–10	1,45 E–10
36 100	2,67 E–08	9,50 E–09	7,41 E–09	9,36 E–10	5,61 E–10	2,50 E–10	2,03 E–10	1,82 E–10	1,93 E–10	2,07 E–10	2,44 E–10	1,94 E–10	2,23 E–10	2,14 E–10	2,66 E–10	2,89 E–10	3,90 E–10	1,37 E–10

Окончание таблицы 5.12

Высота, км	Плотность потока, $м^{-2} \cdot год^{-1}$																	
	2,5°	7,5°	12,5°	17,5°	22,5°	27,5°	32,5°	37,5°	42,5°	47,5°	52,5°	57,5°	62,5°	67,5°	72,5°	77,5°	82,5°	87,5°
36 200	1,97 E–08	7,11 E–09	5,57 E–09	7,65 E–10	5,10 E–10	2,20 E–10	1,83 E–10	1,68 E–10	1,79 E–10	1,94 E–10	2,28 E–10	1,88 E–10	2,20 E–10	2,11 E–10	2,62 E–10	2,86 E–10	3,85 E–10	1,36 E–10
36 300	1,62 E–08	5,92 E–09	4,65 E–09	6,78 E–10	4,81 E–10	2,04 E–10	1,72 E–10	1,60 E–10	1,71 E–10	1,87 E–10	2,20 E–10	1,84 E–10	2,18 E–10	2,09 E–10	2,59 E–10	2,83 E–10	3,82 E–10	1,35 E–10
36 400	1,28 E–08	4,77 E–09	3,76 E–09	5,97 E–10	4,59 E–10	1,87 E–10	1,61 E–10	1,51 E–10	1,62 E–10	1,78 E–10	2,09 E–10	1,79 E–10	2,14 E–10	2,04 E–10	2,52 E–10	2,74 E–10	3,70 E–10	1,33 E–10
36 500	7,34 E–09	2,86 E–09	2,28 E–09	4,39 E–10	3,87 E–10	1,54 E–10	1,37 E–10	1,32 E–10	1,42 E–10	1,58 E–10	1,86 E–10	1,63 E–10	1,98 E–10	1,89 E–10	2,34 E–10	2,55 E–10	3,45 E–10	1,23 E–10
37 000	4,13 E–09	1,72 E–09	1,39 E–09	3,19 E–10	3,09 E–10	1,23 E–10	1,11 E–10	1,09 E–10	1,17 E–10	1,32 E–10	1,55 E–10	1,38 E–10	1,68 E–10	1,59 E–10	1,97 E–10	2,17 E–10	2,95 E–10	1,04 E–10
38 000	2,54 E–09	1,13 E–09	9,20 E–10	2,42 E–10	2,47 E–10	9,83 E–11	8,96 E–11	8,81 E–11	9,51 E–11	1,07 E–10	1,26 E–10	1,12 E–10	1,37 E–10	1,29 E–10	1,59 E–10	1,77 E–10	2,44 E–10	8,56 E–11
39 000	1,69 E–09	7,95 E–10	6,52 E–10	1,89 E–10	1,99 E–10	7,98 E–11	7,30 E–11	7,18 E–11	7,75 E–11	8,74 E–11	1,04 E–10	9,18 E–11	1,12 E–10	1,04 E–10	1,29 E–10	1,44 E–10	1,98 E–10	6,90 E–11

6 Определение потока техногенного вещества относительно космических аппаратов с типовыми орбитами

6.1 При оценке плотности потока $Q_{отн}(h, i)_j$ относительно КА, движущихся по типовым орбитам, расчетные значения параметров орбиты определяют по данным, приведенным в таблице 6.1.

Таблица 6.1 — Параметры типовых орбит

Орбита	Высота, км	Наклонение, град	Период, мин
МКС	420	51,0	92,6
ССО 1	550	97,0	95,3
ССО 2	800	98,0	100,5
ОССС	1500	82,0	115,6
ВЭО	500—40000	62,8	717,0
ГЛОНАСС	19100	64,8	675,0
ГСО	35786	0,0	1437,0

6.2 Средние скорости столкновений, рассчитанные по формуле (5), не существенно зависят от размеров КО. Для рассмотренных высот и наклонений типовых орбит средние скорости определяют по данным, приведенным в таблице 6.2.

Таблица 6.2 — Средние скорости столкновений $\overline{V}_{стл}$

Орбита	Средняя скорость столкновений $\overline{V}_{стл}$, км/с
МКС	10,60
ССО 1	13,06
ССО 2	12,74
ОССС	11,27
ВЭО	12,15
ГЛОНАСС	6,80
ГСО	0,60

6.3 Плотность потока $Q_{отн\,j}$ КО j-х размеров на начало 2020 г. через поверхность КА, движущихся по типовым орбитам, определяют по таблице 6.3.

Таблица 6.3 — Плотность потока КО

Орбита	Плотность потока КО, $м^{-2} \cdot год^{-1}$										
	1	2	3	4	5	6	7	8	9	10	11
МКС	1,24 E+4	9,74 E+0	8,97 E–1	1,46 E–2	1,47 E–3	3,38 E–4	7,87 E–6	1,21 E–5	3,98 E–6	1,09 E–6	1,91 E–6
ССО 1	4,17 E+4	3,28 E+0	3,02 E–1	5,31 E–2	5,75 E–3	1,36 E–3	3,58 E–4	5,46 E–5	1,61 E–5	3,59 E–6	6,43 E–6
ССО 2	9,29 E+4	7,29 E+0	6,72 E–1	3,44 E–1	4,36 E–2	1,07 E–2	2,91 E–3	3,47 E–4	7,11 E–5	8,27 E–6	1,43 E–5
ОССС	1,88 E+3	1,47 E–1	1,36 E–2	2,85 E–1	3,58 E–2	8,18 E–3	1,96 E–3	2,12 E–4	3,53 E–5	2,79 E–6	2,89 E–6
ВЭО	1,04 E+3	8,21 E–1	7,56 E–2	7,03 E–3	8,44 E–4	1,91 E–4	4,63 E–5	5,22 E–6	9,81 E–7	1,11 E–7	1,61 E–7
ГЛОНАСС	5,53 E+3	5,69 E–2	3,39 E–3	6,99 E–4	7,51 E–6	1,58 E–6	2,91 E–7	3,95 E–8	1,62 E–8	1,42 E–8	1,32 E–8

Окончание таблицы 6.3

Орбита	Плотность потока КО, $м^{-2} \cdot год^{-1}$										
	1	2	3	4	5	6	7	8	9	10	11
ГСО	4,78 E+3	3,75 E–1	3,45 E–2	1,07 E–4	8,82 E–6	1,31 E–6	2,06 E–7	4,75 E–8	1,83 E–8	8,91 E–9	7,36 E–8
Примечание — Обозначение «E+/–x» означает $10^{\pm x}$.											

6.4 Статистические плотности $pV_{стл}(A)$ распределения направления трансверсальной составляющей скорости возможных столкновений, рассчитанные с использованием компьютерной программы [2], [3] по формуле (4), для типовых орбит представлены в таблице 6.4 и на рисунках 6.1—6.6. Эти распределения не существенно зависят от размеров КО. Они являются симметричными относительно направления трансверсальной составляющей скорости КА.

Таблица 6.4 — Распределения направления трансверсальной составляющей скорости возможных столкновений для типовых орбит

Угол А	Распределение направления трансверсальной составляющей скорости возможных столкновений для типовых орбит						
	МКС	ССО 1	ССО 2	ОССС	ВЭО	ГЛОНАСС	ГСО
1°	0,00010	0,01359	0,01141	0,06356	0,00238	0,00977	0,01022
3°	0,00023	0,01233	0,01105	0,02340	0,00178	0,00977	0,01691
5°	0,00017	0,01579	0,01636	0,01439	0,00156	0,01610	0,01085
7°	0,00017	0,02539	0,02108	0,01057	0,00242	0,01610	0,00661
9°	0,00020	0,02766	0,02679	0,00646	0,00202	0,01610	0,00621
11°	0,00028	0,02006	0,01945	0,00578	0,00158	0,01610	0,00478
13°	0,00082	0,01484	0,01569	0,00816	0,00292	0,01610	0,00551
15°	0,01211	0,01611	0,01445	0,00760	0,00213	0,03060	0,00593
17°	0,01519	0,01395	0,01213	0,00675	0,00288	0,03060	0,00459
19°	0,01059	0,01394	0,01300	0,00579	0,00276	0,03060	0,00432
21°	0,01143	0,01042	0,01046	0,00538	0,00366	0,03060	0,00527
23°	0,01036	0,00865	0,00854	0,00579	0,00687	0,03060	0,00309
25°	0,00827	0,01001	0,00834	0,00485	0,00987	0,03370	0,00418
27°	0,00976	0,01019	0,00979	0,00396	0,01136	0,03370	0,00339
29°	0,01437	0,01177	0,01076	0,00481	0,00841	0,03370	0,00295
31°	0,01481	0,01203	0,01115	0,00564	0,01180	0,03370	0,00259
33°	0,01184	0,01196	0,01233	0,00593	0,00873	0,03370	0,00367
35°	0,01120	0,00854	0,01025	0,00670	0,00805	0,04230	0,00226
37°	0,01043	0,01016	0,01227	0,00567	0,00617	0,04230	0,00368
39°	0,01033	0,01159	0,01318	0,00434	0,00320	0,04230	0,00286
41°	0,01079	0,01140	0,01341	0,00424	0,00578	0,04230	0,00360
43°	0,01068	0,01168	0,01159	0,00408	0,00513	0,04230	0,00204
45°	0,00865	0,00796	0,00866	0,00665	0,00993	0,03700	0,00292
47°	0,00901	0,00624	0,00472	0,00955	0,01322	0,03700	0,00377
51°	0,01007	0,00561	0,00483	0,01116	0,05439	0,03700	0,00261
53°	0,01148	0,00471	0,00497	0,01156	0,07448	0,03700	0,00327
55°	0,01299	0,00685	0,00574	0,01034	0,03027	0,03700	0,00310
57°	0,01166	0,00636	0,00670	0,01123	0,00388	0,01810	0,00391

Продолжение таблицы 6.4

Угол А	Распределение направления трансверсальной составляющей скорости возможных столкновений для типовых орбит						
	МКС	ССО 1	ССО 2	ОССС	ВЭО	ГЛОНАСС	ГСО
59°	0,01237	0,00658	0,00581	0,01179	0,00064	0,01810	0,00315
61°	0,01581	0,00542	0,00527	0,01310	0,00082	0,01810	0,00293
63°	0,02110	0,00549	0,00518	0,00953	0,00044	0,01810	0,00444
65°	0,02688	0,00489	0,00343	0,01034	0,00033	0,01810	0,00384
67°	0,03290	0,00435	0,00415	0,00885	0,00028	0,00854	0,00349
69°	0,02894	0,00636	0,00536	0,00637	0,00030	0,00854	0,00405
71°	0,01561	0,00608	0,00525	0,01039	0,00026	0,00854	0,00673
73°	0,01250	0,00501	0,00563	0,01157	0,00026	0,00854	0,00566
75°	0,01480	0,00714	0,00654	0,01183	0,00025	0,00854	0,00577
77°	0,01339	0,00691	0,00655	0,01360	0,00023	0,00308	0,00795
79°	0,01615	0,01069	0,01022	0,01672	0,00028	0,00308	0,00193
81°	0,01670	0,01008	0,00835	0,01742	0,00032	0,00308	0,01145
83°	0,00992	0,01165	0,00793	0,02454	0,00032	0,00308	0,00642
85°	0,00670	0,02166	0,01007	0,01741	0,00020	0,00308	0,01245
87°	0,00736	0,00337	0,01691	0,01271	0,00019	0,00063	0,01643
89°	0,00731	0,00334	0,02656	0,00884	0,00020	0,00063	0,01744
91°	0,00037	0,00394	0,00348	0,00576	0,00016	0,00063	0,09104
93°	0,00027	0,00336	0,00212	0,00286	0,00011	0,00063	0,01418
95°	0,00040	0,00365	0,00229	0,00292	0,00011	0,00063	0,00493
97°	0,00028	0,00419	0,00279	0,00148	0,00016	0,00015	0,00424
99°	0,00009	0,00266	0,00182	0,00079	0,00025	0,00015	0,00382
101°	0,00012	0,00345	0,00337	0,00096	0,00029	0,00015	0,00339
103°	0,00018	0,00367	0,00282	0,00099	0,00025	0,00015	0,00430
105°	0,00009	0,00302	0,00219	0,00053	0,00034	0,00015	0,00520
107°	0,00008	0,00235	0,00125	0,00053	0,00029	0,00006	0,00515
109°	0,00001	0,00026	0,00089	0,00036	0,00026	0,00006	0,00512
111°	0,00016	0,00232	0,00145	0,00017	0,00029	0,00006	0,00520
113°	0,00005	0,00097	0,00049	0,00041	0,00022	0,00006	0,00546
115°	0,00005	0,00020	0,00079	0,00019	0,00020	0,00006	0,00430
117°	0,00001	0,00108	0,00086	0,00008	0,00011	0,00003	0,00329
119°	0,00007	0,00046	0,00048	0,00002	0,00008	0,00003	0,00313
121°	0,00004	0,00024	0,00035	0,00013	0,00006	0,00003	0,00396
123°	0,00000	0,00066	0,00045	0,00000	0,00010	0,00003	0,00216
125°	0,00000	0,00000	0,00204	0,00008	0,00009	0,00003	0,00235
127°	0,00005	0,00021	0,00056	0,00004	0,00006	0,00002	0,00297
129°	0,00000	0,00000	0,00039	0,00007	0,00007	0,00002	0,00353
131°	0,00003	0,00045	0,00018	0,00004	0,00007	0,00002	0,00319
133°	0,00000	0,00066	0,00106	0,00004	0,00009	0,00002	0,00338
135°	0,00005	0,00000	0,00067	0,00007	0,00010	0,00002	0,00192
137°	0,00000	0,00000	0,00100	0,00008	0,00006	0,00002	0,00266

Продолжение таблицы 6.4

Угол А	Распределение направления трансверсальной составляющей скорости возможных столкновений для типовых орбит						
	МКС	ССО 1	ССО 2	ОССС	ВЭО	ГЛОНАСС	ГСО
139°	0,00008	0,00103	0,00027	0,00000	0,00006	0,00002	0,00160
141°	0,00000	0,00029	0,00000	0,00005	0,00003	0,00002	0,00207
143°	0,00000	0,00028	0,00043	0,00000	0,00004	0,00002	0,00362
145°	0,00000	0,00018	0,00042	0,00005	0,00004	0,00002	0,00392
147°	0,00000	0,00024	0,00029	0,00010	0,00004	0,00002	0,00243
149°	0,00000	0,00045	0,00049	0,00009	0,00004	0,00002	0,00204
151°	0,00000	0,00000	0,00023	0,00000	0,00003	0,00002	0,00361
153°	0,00000	0,00018	0,00000	0,00009	0,00004	0,00002	0,00479
155°	0,00000	0,00030	0,00055	0,00007	0,00003	0,00002	0,00323
157°	0,00003	0,00020	0,00080	0,00000	0,00004	0,00001	0,00393
159°	0,00000	0,00017	0,00000	0,00002	0,00005	0,00001	0,00305
161°	0,00005	0,00000	0,00021	0,00003	0,00005	0,00001	0,00321
163°	0,00000	0,00000	0,00023	0,00017	0,00005	0,00001	0,00247
165°	0,00000	0,00021	0,00000	0,00003	0,00006	0,00001	0,00304
167°	0,00003	0,00000	0,00025	0,00008	0,00005	0,00001	0,00368
169°	0,00003	0,00000	0,00000	0,00000	0,00004	0,00001	0,00192
171°	0,00000	0,00024	0,00048	0,00000	0,00004	0,00001	0,00170
173°	0,00000	0,00000	0,00000	0,00005	0,00003	0,00001	0,00176
175°	0,00000	0,00013	0,00001	0,00000	0,00003	0,00001	0,00132
177°	0,00000	0,00012	0,00001	0,00000	0,00004	0,00000	0,00225
179°	0,00000	0,00036	0,00051	0,00000	0,00006	0,00000	0,00197
181°	0,00002	0,00013	0,00000	0,00000	0,00006	0,00000	0,00199
183°	0,00000	0,00051	0,00000	0,00000	0,00007	0,00000	0,00221
185°	0,00000	0,00017	0,00044	0,00000	0,00008	0,00000	0,00200
187°	0,00000	0,00022	0,00000	0,00002	0,00007	0,00000	0,00223
189°	0,00000	0,00035	0,00001	0,00005	0,00009	0,00001	0,00181
191°	0,00000	0,00000	0,00000	0,00005	0,00010	0,00001	0,00199
193°	0,00000	0,00024	0,00025	0,00004	0,00021	0,00001	0,00212
195°	0,00000	0,00038	0,00047	0,00002	0,00021	0,00001	0,00099
197°	0,00003	0,00000	0,00044	0,00002	0,00019	0,00001	0,00218
199°	0,00000	0,00000	0,00020	0,00001	0,00017	0,00001	0,00200
201°	0,00003	0,00000	0,00043	0,00017	0,00012	0,00001	0,00239
203°	0,00000	0,00000	0,00023	0,00000	0,00010	0,00001	0,00260
205°	0,00000	0,00045	0,00000	0,00002	0,00009	0,00001	0,00255
207°	0,00008	0,00000	0,00024	0,00006	0,00014	0,00001	0,00388
209°	0,00003	0,00008	0,00027	0,00000	0,00009	0,00001	0,00381
211°	0,00003	0,00024	0,00000	0,00011	0,00011	0,00001	0,00343
213°	0,00000	0,00000	0,00024	0,00003	0,00013	0,00001	0,00342
215°	0,00005	0,00000	0,00049	0,00004	0,00008	0,00001	0,00235
217°	0,00003	0,00044	0,00000	0,00000	0,00011	0,00001	0,00257

Продолжение таблицы 6.4

Угол А	Распределение направления трансверсальной составляющей скорости возможных столкновений для типовых орбит						
	МКС	ССО 1	ССО 2	ОССС	ВЭО	ГЛОНАСС	ГСО
219°	0,00003	0,00038	0,00076	0,00000	0,00008	0,00002	0,00340
221°	0,00002	0,00000	0,00000	0,00007	0,00009	0,00002	0,00279
223°	0,00003	0,00083	0,00043	0,00005	0,00011	0,00002	0,00277
225°	0,00003	0,00073	0,00110	0,00000	0,00027	0,00002	0,00291
227°	0,00003	0,00025	0,00028	0,00022	0,00033	0,00002	0,00359
229°	0,00003	0,00021	0,00042	0,00000	0,00027	0,00002	0,00337
231°	0,00000	0,00027	0,00090	0,00009	0,00018	0,00002	0,00346
233°	0,00000	0,00019	0,00020	0,00008	0,00021	0,00002	0,00301
235°	0,00003	0,00063	0,00040	0,00013	0,00015	0,00002	0,00177
237°	0,00005	0,00019	0,00088	0,00008	0,00016	0,00002	0,00290
239°	0,00003	0,00000	0,00126	0,00008	0,00015	0,00003	0,00294
241°	0,00005	0,00027	0,00028	0,00000	0,00012	0,00003	0,00381
243°	0,00006	0,00019	0,00132	0,00013	0,00020	0,00003	0,00369
245°	0,00001	0,00041	0,00001	0,00022	0,00011	0,00003	0,00361
247°	0,00009	0,00120	0,00096	0,00017	0,00017	0,00003	0,00345
249°	0,00008	0,00037	0,00066	0,00009	0,00009	0,00006	0,00466
251°	0,00006	0,00024	0,00066	0,00033	0,00014	0,00006	0,00449
253°	0,00007	0,00177	0,00061	0,00030	0,00013	0,00006	0,00442
255°	0,00007	0,00068	0,00099	0,00031	0,00008	0,00006	0,00554
257°	0,00019	0,00137	0,00196	0,00046	0,00016	0,00006	0,00596
259°	0,00012	0,00244	0,00190	0,00067	0,00012	0,00015	0,00621
261°	0,00016	0,00218	0,00213	0,00058	0,00013	0,00015	0,00404
263°	0,00023	0,00446	0,00138	0,00083	0,00010	0,00015	0,00332
265°	0,00020	0,00328	0,00199	0,00079	0,00011	0,00015	0,00432
267°	0,00030	0,00315	0,00215	0,00146	0,00012	0,00015	0,00432
269°	0,00037	0,00250	0,00178	0,00238	0,00012	0,00063	0,00572
271°	0,00030	0,00317	0,00136	0,00327	0,00012	0,00063	0,01683
273°	0,00028	0,00337	0,00400	0,00616	0,00013	0,00063	0,09333
275°	0,00668	0,00233	0,02745	0,00797	0,00009	0,00063	0,01767
277°	0,00726	0,00260	0,02090	0,01259	0,00014	0,00063	0,01728
279°	0,00766	0,02542	0,01125	0,01901	0,00018	0,00308	0,01248
281°	0,01019	0,01078	0,00748	0,02388	0,00013	0,00308	0,00657
283°	0,01640	0,01047	0,00684	0,01909	0,00014	0,00308	0,01170
285°	0,01526	0,01106	0,00880	0,01611	0,00013	0,00308	0,00221
287°	0,01402	0,00763	0,00781	0,01301	0,00017	0,00308	0,00749
289°	0,01396	0,00754	0,00590	0,01333	0,00018	0,00854	0,00543
291°	0,01352	0,00539	0,00554	0,01159	0,00021	0,00854	0,00555
293°	0,01664	0,00622	0,00506	0,00945	0,00015	0,00854	0,00529
295°	0,02895	0,00590	0,00559	0,00727	0,00017	0,00854	0,00419
297°	0,03178	0,00427	0,00431	0,00721	0,00020	0,00854	0,00545

Окончание таблицы 6.4

Угол А	Распределение направления трансверсальной составляющей скорости возможных столкновений для типовых орбит						
	МКС	ССО 1	ССО 2	ОССС	ВЭО	ГЛОНАСС	ГСО
299°	0,02580	0,00475	0,00343	0,00929	0,00015	0,01810	0,00315
301°	0,02326	0,00516	0,00431	0,01171	0,00031	0,01810	0,00363
303°	0,01535	0,00604	0,00523	0,01185	0,00026	0,01810	0,00351
305°	0,01154	0,00623	0,00574	0,01239	0,00042	0,01810	0,00305
307°	0,01259	0,00650	0,00699	0,01090	0,00170	0,01810	0,00237
309°	0,01213	0,00636	0,00575	0,01099	0,00225	0,03700	0,00276
311°	0,01098	0,00474	0,00512	0,01120	0,03222	0,03700	0,00374
313°	0,01065	0,00632	0,00476	0,01175	0,06018	0,03700	0,00404
315°	0,00927	0,00558	0,00470	0,00870	0,07227	0,03700	0,00371
317°	0,00872	0,00873	0,00821	0,00671	0,07075	0,03700	0,00304
319°	0,01025	0,01069	0,01164	0,00453	0,02550	0,04230	0,00265
321°	0,01111	0,01190	0,01463	0,00408	0,01846	0,04230	0,00325
323°	0,00970	0,01208	0,01258	0,00398	0,01928	0,04230	0,00309
325°	0,01085	0,00976	0,01218	0,00637	0,01380	0,04230	0,00224
327°	0,01135	0,00884	0,01044	0,00635	0,00784	0,04230	0,00320
329°	0,01230	0,01181	0,01188	0,00628	0,01147	0,03370	0,00368
331°	0,01374	0,01210	0,01111	0,00544	0,01215	0,03370	0,00276
333°	0,01463	0,01233	0,01134	0,00463	0,01165	0,03370	0,00341
335°	0,01006	0,00965	0,00965	0,00382	0,01290	0,03370	0,00293
337°	0,00760	0,01013	0,00836	0,00507	0,01612	0,03370	0,00331
339°	0,01118	0,00875	0,00862	0,00587	0,02513	0,0306	0,0034
341°	0,01115	0,01092	0,01046	0,00541	0,03714	0,0306	0,00288
343°	0,01093	0,01319	0,01266	0,00576	0,02636	0,0306	0,00541
345°	0,01725	0,01411	0,01242	0,00657	0,012	0,0306	0,00419
347°	0,01106	0,01615	0,01450	0,00818	0,01743	0,0306	0,00524
349°	0,00071	0,01539	0,01527	0,0081	0,02181	0,0161	0,00684
351°	0,00029	0,01959	0,01935	0,00538	0,04117	0,0161	0,00464
353°	0,00023	0,02725	0,0265	0,0066	0,09111	0,0161	0,00463
355°	0,00017	0,02489	0,02083	0,01104	0,01471	0,0161	0,00802
357°	0,00017	0,01537	0,01626	0,01441	0,00398	0,0161	0,01037
359°	0,00024	0,01272	0,01110	0,02344	0,00203	0,00977	0,01649

На рисунках 6.1—6.6 показаны графические распределения направления трансверсальной составляющей скорости возможных столкновений для типовых орбит таблицы 6.4 для диапазона размеров d от 0,25 до 0,5 см. Графики представлены в качестве примера отображения, диапазон размеров выбран произвольно.

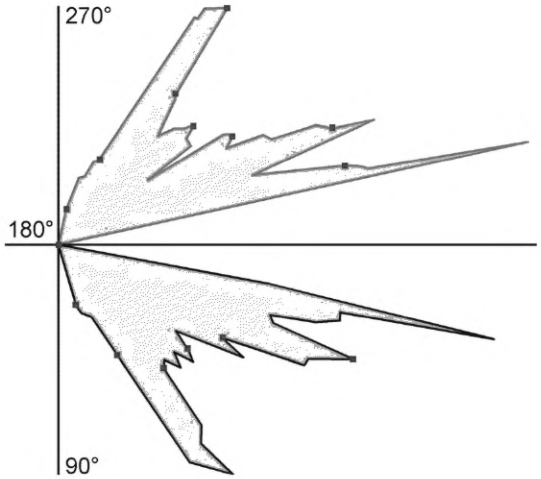

Примечание — Угловое распределение плотности потока при *d,* равном от 0,25 до 0,50 см.

Рисунок 6.1 — Статистическая плотность распределения направлений трансверсальной составляющей скорости возможных столкновений в зоне МКС

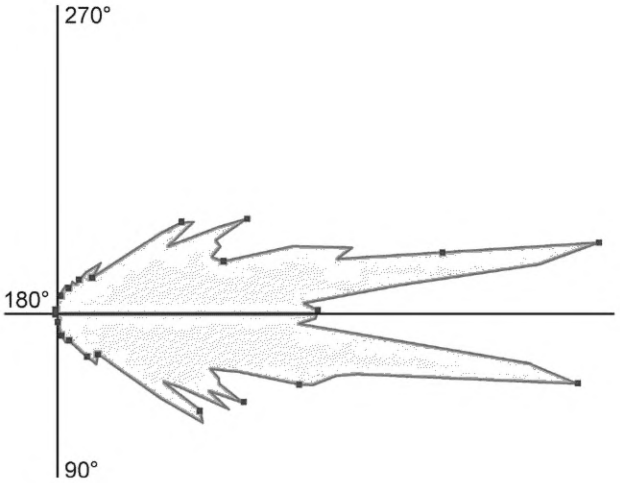

Примечание — Угловое распределение плотности потока при *d,* равном от 0,25 до 0,50 см.

Рисунок 6.2 — Статистическая плотность распределения направлений трансверсальной составляющей скорости возможных столкновений в зоне ССО1

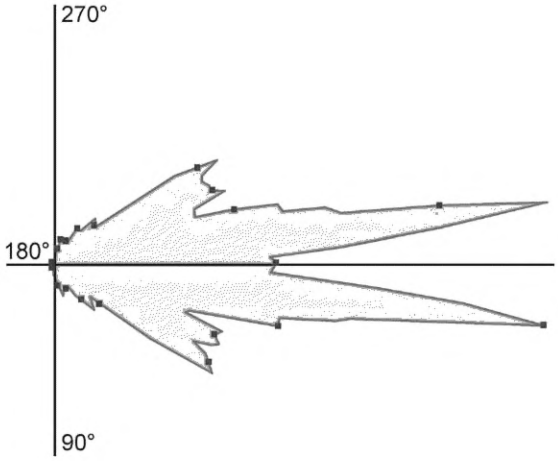

Примечание — Угловое распределение плотности потока при *d,* равном от 0,25 до 0,50 см.

Рисунок 6.3 — Статистическая плотность распределения направлений трансверсальной составляющей скорости возможных столкновений в зоне ССО2

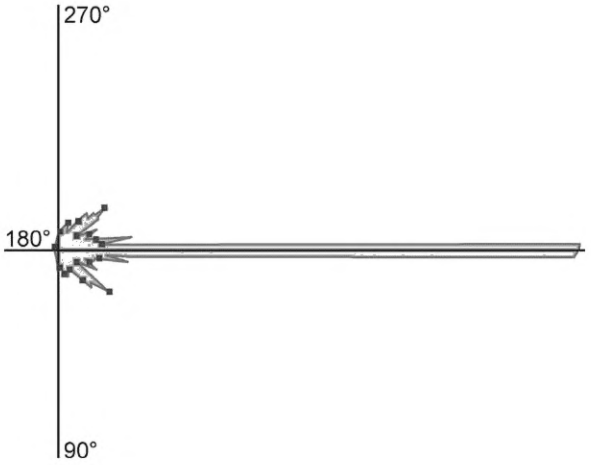

Примечание — Угловое распределение плотности потока при *d,* равном от 0,25 до 0,50 см.

Рисунок 6.4 — Статистическая плотность распределения направлений трансверсальной составляющей скорости возможных столкновений в зоне ОССС

6.5 При расчете по формуле (2) потока КО относительно типовых элементов конструкции КА (цилиндр, конус, панель) в качестве характерной площади *S* используют:

- для цилиндра и конуса — площадь осевого сечения;
- панели — площадь одной стороны.

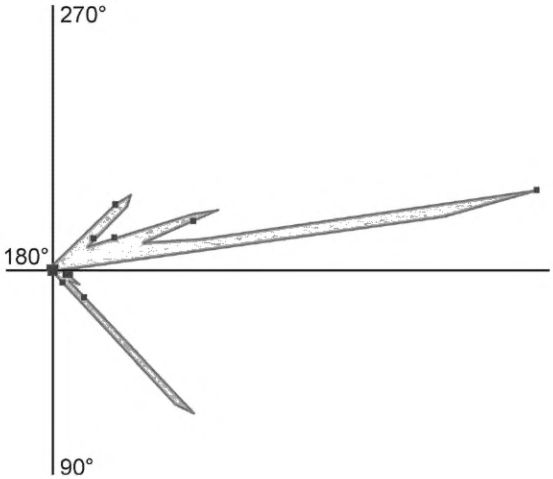

Примечание — Угловое распределение плотности потока при *d*, равном от 0,25 до 0,50 см.

Рисунок 6.5 — Статистическая плотность распределения направлений трансверсальной составляющей скорости возможных столкновений в зоне ВЭО

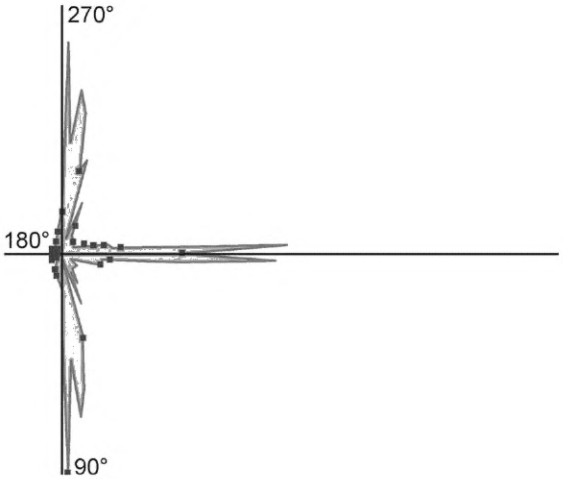

Примечание — Угловое распределение плотности потока при *d*, равном от 0,25 до 0,50 см.

Рисунок 6.6 — Статистическая плотность распределения направлений трансверсальной составляющей скорости возможных столкновений в зоне ГСО

7 Прогнозирование плотности потока техногенного вещества

7.1 Значение функции $F(t)$ выбирают в зависимости от высоты орбиты КА, размеров КО, момента времени t, а также используемой гипотезы об интенсивности образования техногенного вещества на интервале прогноза. Для КА с разными наклонениями и с одинаковой высотой орбиты применяют одно и то же значение функции $F(t)$.

7.2 При прогнозировании плотности потока КО используют три гипотезы об интенсивности образования техногенного вещества на интервале прогноза [4], различающиеся значениями коэффициента технической политики K. Для первой гипотезы применяют значение $K = 1$. Это означает сохранение интенсивности образования КО на уровне предшествующего десятилетия. Вторая гипотеза предполагает, что после 2020 г. будут применены меры по ослаблению техногенного засорения, которые уменьшат интенсивность образования техногенного вещества в 2 раза ($K = 0,5$). Третья гипотеза предполагает стремительный рост запусков КА вследствие развития технологий миниатюризации ($K = 1,5$).

7.3 Применяемые для прогноза плотности потока КО функции $F(t)$ приведены в таблицах 7.1—7.33.

Таблица 7.1 — Значения функции $F(t)$ для КО размером от 0,01 до 0,10 мм и значения $K = 1$ на всем интервале прогноза

Год	$F(t)$		
	НОО	СВО	ГСО
2020	1,00	1,00	1,00
2021	2,35	2,02	2,07
2022	3,70	3,04	3,13
2023	5,06	4,07	4,20
2024	6,41	5,09	5,26
2025	7,76	6,11	6,33
2026	9,11	7,13	7,40
2027	10,46	8,15	8,46
2028	11,82	9,18	9,53
2029	13,17	10,20	10,59

Окончание таблицы 7.1

Год	*F*(*t*)		
	НОО	СВО	ГСО
2030	14,52	11,22	11,66
2031	15,87	12,24	12,73
2032	17,22	13,26	13,79
2033	18,58	14,29	14,86
2034	19,93	15,31	15,92
2035	21,28	16,33	16,99
2036	22,63	17,35	18,06
2037	23,98	18,37	19,12
2038	25,34	19,40	20,19
2039	26,69	20,42	21,25
2040	28,04	21,44	22,32
2041	29,39	22,46	23,39
2042	30,74	23,48	24,45
2043	32,10	24,51	25,52
2044	33,45	25,53	26,58
2045	34,80	26,55	27,65
2046	36,15	27,57	28,72
2047	37,50	28,59	29,78
2048	38,86	29,62	30,85
2049	40,21	30,64	31,91
2050	41,56	31,66	32,98

Таблица 7.2 — Значения функции *F*(*t*) для КО размером от 0,1 до 0,5 мм и значения *K* = 1 на всем интервале прогноза

Год	*F*(*t*)		
	НОО	СВО	ГСО
2020	1,00	1,00	1,00
2021	2,35	2,02	2,07
2022	3,70	3,04	3,13
2023	5,05	4,07	4,20
2024	6,40	5,09	5,26
2025	7,74	6,11	6,33
2026	9,09	7,13	7,39
2027	10,44	8,15	8,46
2028	11,79	9,17	9,52
2029	13,14	10,20	10,59
2030	14,49	11,22	11,65
2031	15,84	12,24	12,72
2032	17,19	13,26	13,78
2033	18,53	14,28	14,85
2034	19,88	15,31	15,92

Окончание таблицы 7.2

Год	*F*(*t*)		
	НОО	СВО	ГСО
2035	21,23	16,33	16,98
2036	22,58	17,35	18,05
2037	23,93	18,37	19,11
2038	25,28	19,39	20,18
2039	26,63	20,41	21,24
2040	27,98	21,44	22,31
2041	29,32	22,46	23,37
2042	30,67	23,48	24,44
2043	32,02	24,50	25,50
2044	33,37	25,52	26,57
2045	34,72	26,55	27,64
2046	36,07	27,57	28,70
2047	37,42	28,59	29,77
2048	38,77	29,61	30,83
2049	40,12	30,63	31,90
2050	41,46	31,65	32,96

Таблица 7.3 — Значения функции *F*(*t*) для КО размером от 0,5 до 1,0 мм и значения *K* = 1 на всем интервале прогноза

Год	*F*(*t*)		
	НОО	СВО	ГСО
2020	1,00	1,00	1,00
2021	2,35	2,02	2,06
2022	3,69	3,04	3,13
2023	5,04	4,06	4,19
2024	6,38	5,09	5,26
2025	7,73	6,11	6,32
2026	9,07	7,13	7,39
2027	10,42	8,15	8,45
2028	11,76	9,17	9,52
2029	13,11	10,19	10,58
2030	14,46	11,22	11,65
2031	15,80	12,24	12,71
2032	17,15	13,26	13,78
2033	18,49	14,28	14,84
2034	19,84	15,30	15,91
2035	21,18	16,32	16,97
2036	22,53	17,35	18,04
2037	23,88	18,37	19,10
2038	25,22	19,39	20,17
2039	26,57	20,41	21,23

Окончание таблицы 7.3

Год	*F*(*t*)		
	НОО	СВО	ГСО
2040	27,91	21,43	22,30
2041	29,26	22,45	23,36
2042	30,60	23,48	24,43
2043	31,95	24,50	25,49
2044	33,29	25,52	26,56
2045	34,64	26,54	27,62
2046	35,99	27,56	28,68
2047	37,33	28,58	29,75
2048	38,68	29,60	30,81
2049	40,02	30,63	31,88
2050	41,37	31,65	32,94

Таблица 7.4 — Значения функции *F*(*t*) для КО размером от 0,10 до 0,25 см и значения *K* = 1 на всем интервале прогноза

Год	*F*(*t*)		
	НОО	СВО	ГСО
2020	1,00	1,00	1,00
2021	2,34	2,02	2,06
2022	3,68	3,04	3,13
2023	5,03	4,06	4,19
2024	6,37	5,09	5,26
2025	7,71	6,11	6,32
2026	9,05	7,13	7,39
2027	10,40	8,15	8,45
2028	11,74	9,17	9,51
2029	13,08	10,19	10,58
2030	14,42	11,21	11,64
2031	15,77	12,24	12,71
2032	17,11	13,26	13,77
2033	18,45	14,28	14,83
2034	19,79	15,30	15,90
2035	21,14	16,32	16,96
2036	22,48	17,34	18,03
2037	23,82	18,36	19,09
2038	25,16	19,39	20,16
2039	26,51	20,41	21,22
2040	27,85	21,43	22,28
2041	29,19	22,45	23,35
2042	30,53	23,47	24,41
2043	31,88	24,49	25,48
2044	33,22	25,51	26,54

Окончание таблицы 7.4

Год	*F*(*t*)		
	НОО	СВО	ГСО
2045	34,56	26,54	27,61
2046	35,90	27,56	28,67
2047	37,24	28,58	29,73
2048	38,59	29,60	30,80
2049	39,93	30,62	31,86
2050	41,27	31,64	32,93

Таблица 7.5 — Значения функции *F*(*t*) для КО размером от 0,25 до 0,50 см и значения *K* = 1 на всем интервале прогноза

Год	*F*(*t*)		
	НОО	СВО	ГСО
2020	1,00	1,00	1,00
2021	2,34	2,02	2,06
2022	3,68	3,04	3,13
2023	5,02	4,06	4,19
2024	6,36	5,08	5,25
2025	7,70	6,11	6,32
2026	9,04	7,13	7,38
2027	10,37	8,15	8,45
2028	11,71	9,17	9,51
2029	13,05	10,19	10,57
2030	14,39	11,21	11,64
2031	15,73	12,23	12,70
2032	17,07	13,25	13,76
2033	18,41	14,28	14,83
2034	19,75	15,30	15,89
2035	21,09	16,32	16,95
2036	22,43	17,34	18,02
2037	23,77	18,36	19,08
2038	25,11	19,38	20,14
2039	26,44	20,40	21,21
2040	27,78	21,42	22,27
2041	29,12	22,45	23,34
2042	30,46	23,47	24,40
2043	31,80	24,49	25,46
2044	33,14	25,51	26,53
2045	34,48	26,53	27,59
2046	35,82	27,55	28,65
2047	37,16	28,57	29,72
2048	38,50	29,59	30,78
2049	39,84	30,61	31,84
2050	41,18	31,64	32,91

Таблица 7.6 — Значения функции $F(t)$ для КО размером от 0,5 до 1,0 см и значения $K = 1$ на всем интервале прогноза

Год	$F(t)$		
	НОО	СВО	ГСО
2020	1,00	1,00	1,00
2021	2,34	2,02	2,06
2022	3,67	3,04	3,13
2023	5,01	4,06	4,19
2024	6,34	5,08	5,25
2025	7,68	6,11	6,32
2026	9,02	7,13	7,38
2027	10,35	8,15	8,44
2028	11,69	9,17	9,50
2029	13,02	10,19	10,57
2030	14,36	11,21	11,63
2031	15,70	12,23	12,69
2032	17,03	13,25	13,76
2033	18,37	14,27	14,82
2034	19,70	15,29	15,88
2035	21,04	16,32	16,95
2036	22,38	17,34	18,01
2037	23,71	18,36	19,07
2038	25,05	19,38	20,13
2039	26,38	20,40	21,20
2040	27,72	21,42	22,26
2041	29,06	22,44	23,32
2042	30,39	23,46	24,39
2043	31,73	24,48	25,45
2044	33,06	25,50	26,51
2045	34,40	26,53	27,58
2046	35,74	27,55	28,64
2047	37,07	28,57	29,70
2048	38,41	29,59	30,76
2049	39,74	30,61	31,83
2050	41,08	31,63	32,89

Таблица 7.7 — Значения функции $F(t)$ для КО размером от 1,0 до 2,5 см и значения $K = 1$ на всем интервале прогноза

Год	$F(t)$		
	НОО	СВО	ГСО
2020	1,00	1,00	1,00
2021	2,33	2,02	2,06
2022	3,67	3,04	3,12
2023	5,00	4,06	4,19

Окончание таблицы 7.7

Год	$F(t)$		
	НОО	СВО	ГСО
2024	6,33	5,08	5,25
2025	7,66	6,10	6,31
2026	9,00	7,12	7,37
2027	10,33	8,15	8,44
2028	11,66	9,17	9,50
2029	13,00	10,19	10,56
2030	14,33	11,21	11,62
2031	15,66	12,23	12,69
2032	16,99	13,25	13,75
2033	18,33	14,27	14,81
2034	19,66	15,29	15,87
2035	20,99	16,31	16,94
2036	22,32	17,33	18,00
2037	23,66	18,35	19,06
2038	24,99	19,37	20,12
2039	26,32	20,40	21,19
2040	27,66	21,42	22,25
2041	28,99	22,44	23,31
2042	30,32	23,46	24,37
2043	31,65	24,48	25,44
2044	32,99	25,50	26,50
2045	34,32	26,52	27,56
2046	35,65	27,54	28,62
2047	36,99	28,56	29,68
2048	38,32	29,58	30,75
2049	39,65	30,60	31,81
2050	40,98	31,62	32,87

Таблица 7.8 — Значения функции $F(t)$ для КО размером от 2,5 до 5,0 см и значения K = 1 на всем интервале прогноза

Год	$F(t)$		
	НОО	СВО	ГСО
2020	1,00	1,00	1,00
2021	2,33	2,02	2,06
2022	3,66	3,04	3,12
2023	4,99	4,06	4,19
2024	6,32	5,08	5,25
2025	7,65	6,10	6,31
2026	8,98	7,12	7,37
2027	10,31	8,14	8,43
2028	11,64	9,16	9,49

Окончание таблицы 7.8

Год	*F*(*t*)		
	НОО	СВО	ГСО
2029	12,97	10,19	10,56
2030	14,30	11,21	11,62
2031	15,63	12,23	12,68
2032	16,96	13,25	13,74
2033	18,28	14,27	14,80
2034	19,61	15,29	15,87
2035	20,94	16,31	16,93
2036	22,27	17,33	17,99
2037	23,60	18,35	19,05
2038	24,93	19,37	20,11
2039	26,26	20,39	21,17
2040	27,59	21,41	22,24
2041	28,92	22,43	23,30
2042	30,25	23,45	24,36
2043	31,58	24,47	25,42
2044	32,91	25,49	26,48
2045	34,24	26,52	27,55
2046	35,57	27,54	28,61
2047	36,90	28,56	29,67
2048	38,23	29,58	30,73
2049	39,56	30,60	31,79
2050	40,89	31,62	32,85

Таблица 7.9 — Значения функции *F*(*t*) для КО размером от 5 до 10 см и значения *K* = 1 на всем интервале прогноза

Год	*F*(*t*)		
	НОО	СВО	ГСО
2020	1,00	1,00	1,00
2021	2,33	2,02	2,06
2022	3,65	3,04	3,12
2023	4,98	4,06	4,18
2024	6,31	5,08	5,24
2025	7,63	6,10	6,31
2026	8,96	7,12	7,37
2027	10,28	8,14	8,43
2028	11,61	9,16	9,49
2029	12,94	10,18	10,55
2030	14,26	11,20	11,61
2031	15,59	12,22	12,67
2032	16,92	13,24	13,73
2033	18,24	14,27	14,80

Окончание таблицы 7.9

Год	$F(t)$		
	НОО	СВО	ГСО
2034	19,57	15,29	15,86
2035	20,90	16,31	16,92
2036	22,22	17,33	17,98
2037	23,55	18,35	19,04
2038	24,88	19,37	20,10
2039	26,20	20,39	21,16
2040	27,53	21,41	22,22
2041	28,85	22,43	23,29
2042	30,18	23,45	24,35
2043	31,51	24,47	25,41
2044	32,83	25,49	26,47
2045	34,16	26,51	27,53
2046	35,49	27,53	28,59
2047	36,81	28,55	29,65
2048	38,14	29,57	30,71
2049	39,47	30,59	31,77
2050	40,79	31,61	32,84

Таблица 7.10 — Значения функции $F(t)$ для КО размером от 10 до 20 см и значения K = 1 на всем интервале прогноза

Год	$F(t)$		
	НОО	СВО	ГСО
2020	1,00	1,00	1,00
2021	2,32	2,02	2,06
2022	3,65	3,04	3,12
2023	4,97	4,06	4,18
2024	6,29	5,08	5,24
2025	7,62	6,10	6,30
2026	8,94	7,12	7,36
2027	10,26	8,14	8,42
2028	11,59	9,16	9,48
2029	12,91	10,18	10,55
2030	14,23	11,20	11,61
2031	15,56	12,22	12,67
2032	16,88	13,24	13,73
2033	18,20	14,26	14,79
2034	19,52	15,28	15,85
2035	20,85	16,30	16,91
2036	22,17	17,32	17,97
2037	23,49	18,34	19,03
2038	24,82	19,36	20,09

Окончание таблицы 7.10

Год	*F*(*t*)		
	НОО	СВО	ГСО
2039	26,14	20,38	21,15
2040	27,46	21,40	22,21
2041	28,79	22,42	23,27
2042	30,11	23,44	24,33
2043	31,43	24,46	25,39
2044	32,76	25,48	26,45
2045	34,08	26,51	27,52
2046	35,40	27,53	28,58
2047	36,73	28,55	29,64
2048	38,05	29,57	30,70
2049	39,37	30,59	31,76
2050	40,70	31,61	32,82

Таблица 7.11 — Значения функции *F*(*t*) для КО размером более 20,0 см и значения *K* = 1 на всем интервале прогноза

Год	*F*(*t*)		
	НОО	СВО	ГСО
2020	1,00	1,00	1,00
2021	2,32	2,02	2,06
2022	3,64	3,04	3,12
2023	4,96	4,06	4,18
2024	6,28	5,08	5,24
2025	7,60	6,10	6,30
2026	8,92	7,12	7,36
2027	10,24	8,14	8,42
2028	11,56	9,16	9,48
2029	12,88	10,18	10,54
2030	14,20	11,20	11,60
2031	15,52	12,22	12,66
2032	16,84	13,24	13,72
2033	18,16	14,26	14,78
2034	19,48	15,28	15,84
2035	20,80	16,30	16,90
2036	22,12	17,32	17,96
2037	23,44	18,34	19,02
2038	24,76	19,36	20,08
2039	26,08	20,38	21,14
2040	27,40	21,40	22,20
2041	28,72	22,42	23,26
2042	30,04	23,44	24,32
2043	31,36	24,46	25,38
2044	32,68	25,48	26,44

Окончание таблицы 7.11

Год	$F(t)$		
	НОО	СВО	ГСО
2045	34,00	26,50	27,50
2046	35,32	27,52	28,56
2047	36,64	28,54	29,62
2048	37,96	29,56	30,68
2049	39,28	30,58	31,74
2050	40,60	31,60	32,80

Таблица 7.12 — Значения функции $F(t)$ для КО размером от 0,01 до 0,10 мм и значения K = 0,5 на всем интервале прогноза

Год	$F(t)$		
	НОО	СВО	ГСО
2020	2,18	2,01	2,03
2021	3,35	3,02	3,07
2022	4,53	4,03	4,10
2023	5,70	5,04	5,13
2024	6,88	6,06	6,17
2025	8,06	7,07	7,20
2026	9,23	8,08	8,23
2027	10,41	9,09	9,26
2028	11,58	10,10	10,30
2029	12,76	11,11	11,33
2030	13,94	12,12	12,36
2031	15,11	13,13	13,40
2032	16,29	14,14	14,43
2033	17,46	15,15	15,46
2034	2,18	2,01	2,03
2035	18,64	16,17	16,50
2036	19,82	17,18	17,53
2037	20,99	18,19	18,56
2038	22,17	19,20	19,59
2039	23,34	20,21	20,63
2040	24,52	21,22	21,66
2041	25,70	22,23	22,69
2042	26,87	23,24	23,73
2043	28,05	24,25	24,76
2044	29,22	25,26	25,79
2045	30,40	26,28	26,83
2046	31,58	27,29	27,86
2047	32,75	28,30	28,89
2048	33,93	29,31	29,92
2049	35,10	30,32	30,96
2050	36,28	31,33	31,99

Таблица 7.13 — Значения функции $F(t)$ для КО размером от 0,1 до 0,5 мм и значения K = 0,5 на всем интервале прогноза

Год	$F(t)$		
	НОО	СВО	ГСО
2020	1,00	1,00	1,00
2021	2,17	2,01	2,03
2022	3,35	3,02	3,07
2023	4,52	4,03	4,10
2024	5,70	5,04	5,13
2025	6,87	6,05	6,16
2026	8,05	7,07	7,20
2027	9,22	8,08	8,23
2028	10,40	9,09	9,26
2029	11,57	10,10	10,29
2030	12,74	11,11	11,33
2031	13,92	12,12	12,36
2032	15,09	13,13	13,39
2033	16,27	14,14	14,43
2034	17,44	15,15	15,46
2035	18,62	16,16	16,49
2036	19,79	17,17	17,52
2037	20,96	18,19	18,56
2038	22,14	19,20	19,59
2039	23,31	20,21	20,62
2040	24,49	21,22	21,65
2041	25,66	22,23	22,69
2042	26,84	23,24	23,72
2043	28,01	24,25	24,75
2044	29,19	25,26	25,78
2045	30,36	26,27	26,82
2046	31,53	27,28	27,85
2047	32,71	28,29	28,88
2048	33,88	29,31	29,92
2049	35,06	30,32	30,95
2050	36,23	31,33	31,98

Таблица 7.14 — Значения функции $F(t)$ для КО размером от 0,5 до 1,0 мм и значения K = 0,5 на всем интервале прогноза

Год	$F(t)$		
	НОО	СВО	ГСО
2020	1,00	1,00	1,00
2021	2,17	2,01	2,03
2022	3,35	3,02	3,06
2023	4,52	4,03	4,10
2024	5,69	5,04	5,13

Окончание таблицы 7.14

Год	$F(t)$		
	НОО	СВО	ГСО
2025	6,86	6,05	6,16
2026	8,04	7,06	7,19
2027	9,21	8,08	8,23
2028	10,38	9,09	9,26
2029	11,56	10,10	10,29
2030	12,73	11,11	11,32
2031	13,90	12,12	12,36
2032	15,07	13,13	13,39
2033	16,25	14,14	14,42
2034	17,42	15,15	15,45
2035	18,59	16,16	16,49
2036	19,76	17,17	17,52
2037	20,94	18,18	18,55
2038	22,11	19,19	19,58
2039	23,28	20,21	20,62
2040	24,46	21,22	21,65
2041	25,63	22,23	22,68
2042	26,80	23,24	23,71
2043	27,97	24,25	24,75
2044	29,15	25,26	25,78
2045	30,32	26,27	26,81
2046	31,49	27,28	27,84
2047	32,67	28,29	28,87
2048	33,84	29,30	29,91
2049	35,01	30,31	30,94
2050	36,18	31,32	31,97

Таблица 7.15 — Значения функции $F(t)$ для КО размером от 0,10 до 0,25 см и значения K = 0,5 на всем интервале прогноза

Год	$F(t)$		
	НОО	СВО	ГСО
2020	1,00	1,00	1,00
2021	2,17	2,01	2,03
2022	3,34	3,02	3,06
2023	4,51	4,03	4,10
2024	5,68	5,04	5,13
2025	6,86	6,05	6,16
2026	8,03	7,06	7,19
2027	9,20	8,07	8,22
2028	10,37	9,09	9,26
2029	11,54	10,10	10,29

Окончание таблицы 7.15

Год	$F(t)$		
	НОО	СВО	ГСО
2030	12,71	11,11	11,32
2031	13,88	12,12	12,35
2032	15,05	13,13	13,39
2033	16,23	14,14	14,42
2034	17,40	15,15	15,45
2035	18,57	16,16	16,48
2036	19,74	17,17	17,51
2037	20,91	18,18	18,55
2038	22,08	19,19	19,58
2039	23,25	20,20	20,61
2040	24,42	21,21	21,64
2041	25,60	22,22	22,67
2042	26,77	23,24	23,71
2043	27,94	24,25	24,74
2044	29,11	25,26	25,77
2045	30,28	26,27	26,80
2046	31,45	27,28	27,83
2047	32,62	28,29	28,87
2048	33,79	29,30	29,90
2049	34,96	30,31	30,93
2050	36,14	31,32	31,96

Таблица 7.16 — Значения функции $F(t)$ для КО размером от 0,25 до 0,50 см и значения K = 0,5 на всем интервале прогноза

Год	$F(t)$		
	НОО	СВО	ГСО
2020	1,00	1,00	1,00
2021	2,17	2,01	2,03
2022	3,34	3,02	3,06
2023	4,51	4,03	4,10
2024	5,68	5,04	5,13
2025	6,85	6,05	6,16
2026	8,02	7,06	7,19
2027	9,19	8,07	8,22
2028	10,36	9,08	9,25
2029	11,53	10,10	10,29
2030	12,70	11,11	11,32
2031	13,87	12,12	12,35
2032	15,04	13,13	13,38
2033	16,20	14,14	14,41
2034	17,37	15,15	15,45

Окончание таблицы 7.16

Год	$F(t)$		
	НОО	СВО	ГСО
2035	18,54	16,16	16,48
2036	19,71	17,17	17,51
2037	20,88	18,18	18,54
2038	22,05	19,19	19,57
2039	23,22	20,20	20,60
2040	24,39	21,21	21,64
2041	25,56	22,22	22,67
2042	26,73	23,23	23,70
2043	27,90	24,24	24,73
2044	29,07	25,25	25,76
2045	30,24	26,27	26,80
2046	31,41	27,28	27,83
2047	32,58	28,29	28,86
2048	33,75	29,30	29,89
2049	34,92	30,31	30,92
2050	36,09	31,32	31,95

Таблица 7.17 — Значения функции $F(t)$ для КО размером от 0,5 до 1,0 см и значения K = 0,5 на всем интервале прогноза

Год	$F(t)$		
	НОО	СВО	ГСО
2020	1,00	1,00	1,00
2021	2,17	2,01	2,03
2022	3,34	3,02	3,06
2023	4,50	4,03	4,09
2024	5,67	5,04	5,13
2025	6,84	6,05	6,16
2026	8,01	7,06	7,19
2027	9,18	8,07	8,22
2028	10,34	9,08	9,25
2029	11,51	10,09	10,28
2030	12,68	11,11	11,32
2031	13,85	12,12	12,35
2032	15,02	13,13	13,38
2033	16,18	14,14	14,41
2034	17,35	15,15	15,44
2035	18,52	16,16	16,47
2036	19,69	17,17	17,50
2037	20,86	18,18	18,54
2038	22,02	19,19	19,57
2039	23,19	20,20	20,60

Окончание таблицы 7.17

Год	*F*(*t*)		
	НОО	СВО	ГСО
2040	24,36	21,21	21,63
2041	25,53	22,22	22,66
2042	26,70	23,23	23,69
2043	27,86	24,24	24,72
2044	29,03	25,25	25,76
2045	30,20	26,26	26,79
2046	31,37	27,27	27,82
2047	32,54	28,28	28,85
2048	33,70	29,29	29,88
2049	34,87	30,30	30,91
2050	36,04	31,32	31,95

Таблица 7.18 — Значения функции *F*(*t*) для КО размером от 1,0 до 2,5 см и значения *K* = 0,5 на всем интервале прогноза

Год	*F*(*t*)		
	НОО	СВО	ГСО
2020	1,00	1,00	1,00
2021	2,17	2,01	2,03
2022	3,33	3,02	3,06
2023	4,50	4,03	4,09
2024	5,67	5,04	5,12
2025	6,83	6,05	6,16
2026	8,00	7,06	7,19
2027	9,16	8,07	8,22
2028	10,33	9,08	9,25
2029	11,50	10,09	10,28
2030	12,66	11,10	11,31
2031	13,83	12,11	12,34
2032	15,00	13,12	13,37
2033	16,16	14,14	14,41
2034	17,33	15,15	15,44
2035	18,50	16,16	16,47
2036	19,66	17,17	17,50
2037	20,83	18,18	18,53
2038	22,00	19,19	19,56
2039	23,16	20,20	20,59
2040	24,33	21,21	21,62
2041	25,49	22,22	22,66
2042	26,66	23,23	23,69
2043	27,83	24,24	24,72
2044	28,99	25,25	25,75

Окончание таблицы 7.18

Год	$F(t)$		
	НОО	СВО	ГСО
2045	30,16	26,26	26,78
2046	31,33	27,27	27,81
2047	32,49	28,28	28,84
2048	33,66	29,29	29,87
2049	34,83	30,30	30,90
2050	35,99	31,31	31,94

Таблица 7.19 — Значения функции $F(t)$ для КО размером от 2,5 до 5,0 см и значения K = 0,5 на всем интервале прогноза

Год	$F(t)$		
	НОО	СВО	ГСО
2020	1,00	1,00	1,00
2021	2,16	2,01	2,03
2022	3,33	3,02	3,06
2023	4,49	4,03	4,09
2024	5,66	5,04	5,12
2025	6,82	6,05	6,15
2026	7,99	7,06	7,19
2027	9,15	8,07	8,22
2028	10,32	9,08	9,25
2029	11,48	10,09	10,28
2030	12,65	11,10	11,31
2031	13,81	12,11	12,34
2032	14,98	13,12	13,37
2033	16,14	14,13	14,40
2034	17,31	15,14	15,43
2035	18,47	16,15	16,46
2036	19,64	17,16	17,49
2037	20,80	18,18	18,53
2038	21,97	19,19	19,56
2039	23,13	20,20	20,59
2040	24,30	21,21	21,62
2041	25,46	22,22	22,65
2042	26,63	23,23	23,68
2043	27,79	24,24	24,71
2044	28,96	25,25	25,74
2045	30,12	26,26	26,77
2046	31,28	27,27	27,80
2047	32,45	28,28	28,83
2048	33,61	29,29	29,87
2049	34,78	30,30	30,90
2050	35,94	31,31	31,93

Таблица 7.20 — Значения функции $F(t)$ для КО размером от 5 до 10 см и значения K = 0,5 на всем интервале прогноза

Год	$F(t)$		
	НОО	СВО	ГСО
2020	1,00	1,00	1,00
2021	2,16	2,01	2,03
2022	3,33	3,02	3,06
2023	4,49	4,03	4,09
2024	5,65	5,04	5,12
2025	6,82	6,05	6,15
2026	7,98	7,06	7,18
2027	9,14	8,07	8,21
2028	10,31	9,08	9,24
2029	11,47	10,09	10,28
2030	12,63	11,10	11,31
2031	13,80	12,11	12,34
2032	14,96	13,12	13,37
2033	16,12	14,13	14,40
2034	17,28	15,14	15,43
2035	18,45	16,15	16,46
2036	19,61	17,16	17,49
2037	20,77	18,17	18,52
2038	21,94	19,18	19,55
2039	23,10	20,19	20,58
2040	24,26	21,20	21,61
2041	25,43	22,21	22,64
2042	26,59	23,22	23,67
2043	27,75	24,23	24,70
2044	28,92	25,24	25,73
2045	30,08	26,26	26,77
2046	31,24	27,27	27,80
2047	32,41	28,28	28,83
2048	33,57	29,29	29,86
2049	34,73	30,30	30,89
2050	35,90	31,31	31,92

Таблица 7.21 — Значения функции $F(t)$ для КО размером от 10 до 20 см и значения K = 0,5 на всем интервале прогноза

Год	$F(t)$		
	НОО	СВО	ГСО
2020	1,00	1,00	1,00
2021	2,16	2,01	2,03
2022	3,32	3,02	3,06
2023	4,48	4,03	4,09
2024	5,65	5,04	5,12

Окончание таблицы 7.21

Год	$F(t)$		
	НОО	СВО	ГСО
2025	6,81	6,05	6,15
2026	7,97	7,06	7,18
2027	9,13	8,07	8,21
2028	10,29	9,08	9,24
2029	11,45	10,09	10,27
2030	12,62	11,10	11,30
2031	13,78	12,11	12,33
2032	14,94	13,12	13,36
2033	16,10	14,13	14,39
2034	17,26	15,14	15,42
2035	18,42	16,15	16,45
2036	19,59	17,16	17,48
2037	20,75	18,17	18,52
2038	21,91	19,18	19,55
2039	23,07	20,19	20,58
2040	24,23	21,20	21,61
2041	25,39	22,21	22,64
2042	26,56	23,22	23,67
2043	27,72	24,23	24,70
2044	28,88	25,24	25,73
2045	30,04	26,25	26,76
2046	31,20	27,26	27,79
2047	32,36	28,27	28,82
2048	33,52	29,28	29,85
2049	34,69	30,29	30,88
2050	35,85	31,30	31,91

Таблица 7.22 — Значения функции $F(t)$ для КО размером более 20 см и значения K = 0,5 на всем интервале прогноза

Год	$F(t)$		
	НОО	СВО	ГСО
2020	1,00	1,00	1,00
2021	2,16	2,01	2,03
2022	3,32	3,02	3,06
2023	4,48	4,03	4,09
2024	5,64	5,04	5,12
2025	6,80	6,05	6,15
2026	7,96	7,06	7,18
2027	9,12	8,07	8,21
2028	10,28	9,08	9,24
2029	11,44	10,09	10,27

Окончание таблицы 7.22

Год	$F(t)$		
	НОО	СВО	ГСО
2030	12,60	11,10	11,30
2031	13,76	12,11	12,33
2032	14,92	13,12	13,36
2033	16,08	14,13	14,39
2034	17,24	15,14	15,42
2035	18,40	16,15	16,45
2036	19,56	17,16	17,48
2037	20,72	18,17	18,51
2038	21,88	19,18	19,54
2039	23,04	20,19	20,57
2040	24,20	21,20	21,60
2041	25,36	22,21	22,63
2042	26,52	23,22	23,66
2043	27,68	24,23	24,69
2044	28,84	25,24	25,72
2045	30,00	26,25	26,75
2046	31,16	27,26	27,78
2047	32,32	28,27	28,81
2048	33,48	29,28	29,84
2049	34,64	30,29	30,87
2050	35,80	31,30	31,90

Таблица 7.23 — Значения функции $F(t)$ для КО размером от 0,01 до 0,10 мм и значения K = 1,5 на всем интервале прогноза

Год	$F(t)$		
	НОО	СВО	ГСО
2020	1,00	1,00	1,00
2021	2,53	2,04	2,13
2022	4,06	3,09	3,26
2023	5,58	4,13	4,40
2024	7,11	5,18	5,53
2025	8,64	6,22	6,66
2026	10,17	7,26	7,79
2027	11,70	8,31	8,92
2028	13,22	9,35	10,06
2029	14,75	10,40	11,19
2030	16,28	11,44	12,32
2031	17,81	12,48	13,45
2032	19,34	13,53	14,58
2033	20,86	14,57	15,72
2034	22,39	15,62	16,85

Окончание таблицы 7.23

Год	$F(t)$		
	НОО	СВО	ГСО
2035	23,92	16,66	17,98
2036	25,45	17,70	19,11
2037	26,98	18,75	20,24
2038	28,50	19,79	21,38
2039	30,03	20,84	22,51
2040	31,56	21,88	23,64
2041	33,09	22,92	24,77
2042	34,62	23,97	25,90
2043	36,14	25,01	27,04
2044	37,67	26,06	28,17
2045	39,20	27,10	29,30
2046	40,73	28,14	30,43
2047	42,26	29,19	31,56
2048	43,78	30,23	32,70
2049	45,31	31,28	33,83
2050	46,84	32,32	34,96

Таблица 7.24 — Значения функции $F(t)$ для КО размером от 0,1 до 0,5 мм и значения K = 1,5 на всем интервале прогноза

Год	$F(t)$		
	НОО	СВО	ГСО
2020	1,00	1,00	1,00
2021	2,52	2,04	2,13
2022	4,05	3,09	3,26
2023	5,57	4,13	4,39
2024	7,09	5,17	5,52
2025	8,62	6,22	6,65
2026	10,14	7,26	7,78
2027	11,66	8,31	8,92
2028	13,19	9,35	10,05
2029	14,71	10,39	11,18
2030	16,23	11,44	12,31
2031	17,76	12,48	13,44
2032	19,28	13,52	14,57
2033	20,80	14,57	15,70
2034	22,32	15,61	16,83
2035	23,85	16,65	17,96
2036	25,37	17,70	19,09
2037	26,89	18,74	20,22
2038	28,42	19,78	21,35
2039	29,94	20,83	22,49

Окончание таблицы 7.24

Год	*F*(*t*)		
	НОО	СВО	ГСО
2040	31,46	21,87	23,62
2041	32,99	22,92	24,75
2042	34,51	23,96	25,88
2043	36,03	25,00	27,01
2044	37,56	26,05	28,14
2045	39,08	27,09	29,27
2046	40,60	28,13	30,40
2047	42,13	29,18	31,53
2048	43,65	30,22	32,66
2049	45,17	31,26	33,79
2050	46,70	32,31	34,92

Таблица 7.25 — Значения функции *F*(*t*) для КО размером от 0,5 до 1,0 мм и значения *K* = 1,5 на всем интервале прогноза

Год	*F*(*t*)		
	НОО	СВО	ГСО
2020	1,00	1,00	1,00
2021	2,52	2,04	2,13
2022	4,04	3,09	3,26
2023	5,56	4,13	4,39
2024	7,07	5,17	5,52
2025	8,59	6,22	6,65
2026	10,11	7,26	7,78
2027	11,63	8,30	8,91
2028	13,15	9,35	10,04
2029	14,67	10,39	11,17
2030	16,18	11,43	12,30
2031	17,70	12,48	13,43
2032	19,22	13,52	14,56
2033	20,74	14,56	15,68
2034	22,26	15,60	16,81
2035	23,78	16,65	17,94
2036	25,29	17,69	19,07
2037	26,81	18,73	20,20
2038	28,33	19,78	21,33
2039	29,85	20,82	22,46
2040	31,37	21,86	23,59
2041	32,89	22,91	24,72
2042	34,40	23,95	25,85
2043	35,92	24,99	26,98
2044	37,44	26,04	28,11

Окончание таблицы 7.25

Год	$F(t)$		
	НОО	СВО	ГСО
2045	38,96	27,08	29,24
2046	40,48	28,12	30,37
2047	42,00	29,17	31,50
2048	43,52	30,21	32,63
2049	45,03	31,25	33,76
2050	46,55	32,30	34,89

Таблица 7.26 — Значения функции $F(t)$ для КО размером от 0,10 до 0,25 см и значения K = 1,5 на всем интервале прогноза

Год	$F(t)$		
	НОО	СВО	ГСО
2020	1,00	1,00	1,00
2021	2,51	2,04	2,13
2022	4,03	3,09	3,26
2023	5,54	4,13	4,39
2024	7,05	5,17	5,51
2025	8,57	6,21	6,64
2026	10,08	7,26	7,77
2027	11,60	8,30	8,90
2028	13,11	9,34	10,03
2029	14,62	10,39	11,16
2030	16,14	11,43	12,28
2031	17,65	12,47	13,41
2032	19,16	13,51	14,54
2033	20,68	14,56	15,67
2034	22,19	15,60	16,80
2035	23,70	16,64	17,93
2036	25,22	17,68	19,05
2037	26,73	18,73	20,18
2038	28,24	19,77	21,31
2039	29,76	20,81	22,44
2040	31,27	21,86	23,57
2041	32,79	22,90	24,70
2042	34,30	23,94	25,82
2043	35,81	24,98	26,95
2044	37,33	26,03	28,08
2045	38,84	27,07	29,21
2046	40,35	28,11	30,34
2047	41,87	29,16	31,47
2048	43,38	30,20	32,60
2049	44,89	31,24	33,72
2050	46,41	32,28	34,85

Таблица 7.27 — Значения функции $F(t)$ для КО размером от 0,25 до 0,50 см и значения K = 1,5 на всем интервале прогноза

Год	$F(t)$		
	НОО	СВО	ГСО
2020	1,00	1,00	1,00
2021	2,51	2,04	2,13
2022	4,02	3,08	3,25
2023	5,53	4,13	4,38
2024	7,04	5,17	5,51
2025	8,54	6,21	6,64
2026	10,05	7,25	7,76
2027	11,56	8,30	8,89
2028	13,07	9,34	10,02
2029	14,58	10,38	11,14
2030	16,09	11,42	12,27
2031	17,60	12,47	13,40
2032	19,11	13,51	14,53
2033	20,61	14,55	15,65
2034	22,12	15,59	16,78
2035	23,63	16,64	17,91
2036	25,14	17,68	19,04
2037	26,65	18,72	20,16
2038	28,16	19,76	21,29
2039	29,67	20,81	22,42
2040	31,18	21,85	23,54
2041	32,68	22,89	24,67
2042	34,19	23,93	25,80
2043	35,70	24,98	26,93
2044	37,21	26,02	28,05
2045	38,72	27,06	29,18
2046	40,23	28,10	30,31
2047	41,74	29,14	31,43
2048	43,25	30,19	32,56
2049	44,76	31,23	33,69
2050	46,26	32,27	34,82

Таблица 7.28 — Значения функции $F(t)$ для КО размером от 0,5 до 1,0 см и значения K = 1,5 на всем интервале прогноза

Год	$F(t)$		
	НОО	СВО	ГСО
2020	1,00	1,00	1,00
2021	2,50	2,04	2,13
2022	4,01	3,08	3,25
2023	5,51	4,13	4,38
2024	7,02	5,17	5,50
2025	8,52	6,21	6,63

Окончание таблицы 7.28

Год	$F(t)$		
	НОО	СВО	ГСО
2026	10,02	7,25	7,76
2027	11,53	8,29	8,88
2028	13,03	9,34	10,01
2029	14,54	10,38	11,13
2030	16,04	11,42	12,26
2031	17,54	12,46	13,39
2032	19,05	13,50	14,51
2033	20,55	14,55	15,64
2034	22,06	15,59	16,76
2035	23,56	16,63	17,89
2036	25,06	17,67	19,02
2037	26,57	18,71	20,14
2038	28,07	19,76	21,27
2039	29,58	20,80	22,39
2040	31,08	21,84	23,52
2041	32,58	22,88	24,65
2042	34,09	23,92	25,77
2043	35,59	24,97	26,90
2044	37,10	26,01	28,02
2045	38,60	27,05	29,15
2046	40,10	28,09	30,28
2047	41,61	29,13	31,40
2048	43,11	30,18	32,53
2049	44,62	31,22	33,65
2050	46,12	32,26	34,78

Таблица 7.29 — Значения функции $F(t)$ для КО размером от 1,0 до 2,5 см и значения K = 1,5 на всем интервале прогноза

Год	$F(t)$		
	НОО	СВО	ГСО
2020	2,50	2,04	2,12
2021	4,00	3,08	3,25
2022	5,50	4,12	4,37
2023	7,00	5,17	5,50
2024	8,50	6,21	6,62
2025	10,00	7,25	7,75
2026	11,49	8,29	8,87
2027	12,99	9,33	10,00
2028	14,49	10,37	11,12
2029	15,99	11,42	12,25
2030	17,49	12,46	13,37

Окончание таблицы 7.29

Год	*F*(*t*)		
	НОО	СВО	ГСО
2031	18,99	13,50	14,50
2032	20,49	14,54	15,62
2033	21,99	15,58	16,75
2034	23,49	16,62	17,87
2035	24,99	17,67	19,00
2036	26,49	18,71	20,12
2037	27,99	19,75	21,25
2038	29,48	20,79	22,37
2039	30,98	21,83	23,50
2040	32,48	22,87	24,62
2041	33,98	23,92	25,75
2042	35,48	24,96	26,87
2043	36,98	26,00	28,00
2044	2,50	2,04	2,12
2045	38,48	27,04	29,12
2046	39,98	28,08	30,24
2047	41,48	29,12	31,37
2048	42,98	30,16	32,49
2049	44,48	31,21	33,62
2050	45,98	32,25	34,74

Таблица 7.30 — Значения функции *F*(*t*) для КО размером от 2,5 до 5,0 см и значения *K* = 1,5 на всем интервале прогноза

Год	*F*(*t*)		
	НОО	СВО	ГСО
2020	1,00	1,00	1,00
2021	2,49	2,04	2,12
2022	3,99	3,08	3,25
2023	5,48	4,12	4,37
2024	6,98	5,16	5,49
2025	8,47	6,21	6,62
2026	9,97	7,25	7,74
2027	11,46	8,29	8,87
2028	12,96	9,33	9,99
2029	14,45	10,37	11,11
2030	15,94	11,41	12,24
2031	17,44	12,45	13,36
2032	18,93	13,49	14,48
2033	20,43	14,54	15,61
2034	21,92	15,58	16,73
2035	23,42	16,62	17,85

Окончание таблицы 7.30

Год	*F*(*t*)		
	НОО	СВО	ГСО
2036	24,91	17,66	18,98
2037	26,40	18,70	20,10
2038	27,90	19,74	21,22
2039	29,39	20,78	22,35
2040	30,89	21,82	23,47
2041	32,38	22,87	24,60
2042	33,88	23,91	25,72
2043	35,37	24,95	26,84
2044	36,87	25,99	27,97
2045	38,36	27,03	29,09
2046	39,85	28,07	30,21
2047	41,35	29,11	31,34
2048	42,84	30,15	32,46
2049	44,34	31,19	33,58
2050	45,83	32,24	34,71

Таблица 7.31 — Значения функции *F*(*t*) для КО размером от 5 до 10 см и значения *K* = 1,5 на всем интервале прогноза

Год	*F*(*t*)		
	НОО	СВО	ГСО
2020	1,00	1,00	1,00
2021	2,49	2,04	2,12
2022	3,98	3,08	3,24
2023	5,47	4,12	4,37
2024	6,96	5,16	5,49
2025	8,45	6,20	6,61
2026	9,94	7,24	7,73
2027	11,43	8,29	8,86
2028	12,92	9,33	9,98
2029	14,41	10,37	11,10
2030	15,90	11,41	12,22
2031	17,39	12,45	13,35
2032	18,88	13,49	14,47
2033	20,36	14,53	15,59
2034	21,85	15,57	16,71
2035	23,34	16,61	17,84
2036	24,83	17,65	18,96
2037	26,32	18,69	20,08
2038	27,81	19,73	21,20
2039	29,30	20,78	22,33
2040	30,79	21,82	23,45

Окончание таблицы 7.31

Год	*F*(*t*)		
	НОО	СВО	ГСО
2041	32,28	22,86	24,57
2042	33,77	23,90	25,69
2043	35,26	24,94	26,82
2044	36,75	25,98	27,94
2045	38,24	27,02	29,06
2046	39,73	28,06	30,18
2047	41,22	29,10	31,30
2048	42,71	30,14	32,43
2049	44,20	31,18	33,55
2050	45,69	32,22	34,67

Таблица 7.32 — Значения функции *F*(*t*) для КО размером от 10 до 20 см и значения *K* = 1,5 на всем интервале прогноза

Год	*F*(*t*)		
	НОО	СВО	ГСО
2020	1,00	1,00	1,00
2021	2,48	2,04	2,12
2022	3,97	3,08	3,24
2023	5,45	4,12	4,36
2024	6,94	5,16	5,48
2025	8,42	6,20	6,61
2026	9,91	7,24	7,73
2027	11,39	8,28	8,85
2028	12,88	9,32	9,97
2029	14,36	10,36	11,09
2030	15,85	11,40	12,21
2031	17,33	12,44	13,33
2032	18,82	13,48	14,45
2033	20,30	14,53	15,58
2034	21,79	15,57	16,70
2035	23,27	16,61	17,82
2036	24,76	17,65	18,94
2037	26,24	18,69	20,06
2038	27,73	19,73	21,18
2039	29,21	20,77	22,30
2040	30,70	21,81	23,42
2041	32,18	22,85	24,55
2042	33,67	23,89	25,67
2043	35,15	24,93	26,79
2044	36,64	25,97	27,91
2045	38,12	27,01	29,03

Окончание таблицы 7.32

Год	$F(t)$		
	НОО	СВО	ГСО
2046	39,60	28,05	30,15
2047	41,09	29,09	31,27
2048	42,57	30,13	32,39
2049	44,06	31,17	33,51
2050	45,54	32,21	34,64

Таблица 7.33 — Значения функции $F(t)$ для КО размером более 20 см и значения K = 1,5 на всем интервале прогноза

Год	$F(t)$		
	НОО	СВО	ГСО
2020	1,00	1,00	1,00
2021	2,48	2,04	2,12
2022	3,96	3,08	3,24
2023	5,44	4,12	4,36
2024	6,92	5,16	5,48
2025	8,40	6,20	6,60
2026	9,88	7,24	7,72
2027	11,36	8,28	8,84
2028	12,84	9,32	9,96
2029	14,32	10,36	11,08
2030	15,80	11,40	12,20
2031	17,28	12,44	13,32
2032	18,76	13,48	14,44
2033	20,24	14,52	15,56
2034	21,72	15,56	16,68
2035	23,20	16,6	17,8
2036	24,68	17,64	18,92
2037	26,16	18,68	20,04
2038	27,64	19,72	21,16
2039	29,12	20,76	22,28
2040	30,60	21,80	23,40
2041	32,08	22,84	24,52
2042	33,56	23,88	25,64
2043	35,04	24,92	26,76
2044	36,52	25,96	27,88
2045	38,00	27,00	29,00
2046	39,48	28,04	30,12
2047	40,96	29,08	31,24
2048	42,44	30,12	32,36
2049	43,92	31,16	33,48
2050	45,40	32,20	34,60

Приложение А
(справочное)

Характеристики компьютерных программ для определения пространственно-временного распределения техногенного вещества

А.1 Общие данные о компьютерных программах

А.1.1 Математические модели техногенного засорения ОКП, использованные для подготовки данных настоящего стандарта, реализованы в виде двух типов компьютерных программ под общим наименованием «Модель для прогнозирования и анализа космического мусора [Space Debris prediction and Analysis (SDPA)]».

А.1.2 Программы реализуют полуаналитическую стохастическую математическую модель для среднесрочного и долгосрочного прогнозирования техногенных КО размером более 10 мкм, для построения пространственных распределений концентрации и характеристик скорости, а также для оценки риска столкновений. Рассмотрены суммарные данные о КО различных размеров (без их «привязки» к конкретным источникам засорения). Текущее состояние засорения ОКП характеризуется:

- зависимостью концентрации КО от высоты и широты точки;
- статистическими распределениями величины и направления скорости частиц в ИСК.

А.1.3 Инженерная модель предназначена для быстрого, удобного и визуального представления характеристик космического мусора. Эти характеристики определяют для частиц размером более 10 мкм в рабочих областях ОКП. Основные исходные данные инженерной модели имеют форму таблиц. Они подготовлены на основе большого количества расчетов. Для конкретных исходных данных пользователя посредством инженерной модели выполнена интерполяция табличных данных, подготовленных разработчиком. Интерполяция подготовленных разработчиком табличных данных является характерной чертой инженерной модели.

А.1.4 Модель позволяет вычислить следующие характеристики:

- концентрация космического мусора разных размеров;
- статистические распределения величины и направления скорости космического мусора разных размеров;
- плотность потока космического мусора в ИСК;
- плотность потока космического мусора относительно КА на заданной орбите;
- среднее число столкновений с КА сферической формы заданного размера на определенном интервале прогноза;
- угловое распределение потока космического мусора относительно КА на заданной орбите;
- распределения скорости столкновений КА с космическим мусором.

А.2 Зарубежными аналогами модели являются:

- Meteoroid And Space debris Terrestrial Environment Reference model (MASTER) (ESA License) — Эталонная модель околоземной среды микрометеороидов и космического мусора Европейского космического агентства;
- Orbital Debris Engineering Model (ORDEM) (NASA License) — Инженерная модель космического мусора.

А.3 Для получения наиболее корректных оценок пространственно-временного распределения плотности потоков техногенного вещества в ОКП рекомендуется использовать последние версии компьютерных программ, уточнение которых проводят регулярно с учетом новых экспериментальных данных, а также уточненных прогнозов, основанных на тенденциях космической деятельности.

Библиография

[1] А.И. Назаренко «Моделирование космического мусора» — М: ИКИ РАН, 2013

[2] Свидетельство № 2018665226 Свидетельство о государственной регистрации программы для ЭВМ № 2018665226. gost.e-ecolog.ru

[3] Свидетельство № 2018664690 Свидетельство о государственной регистрации программы для ЭВМ № 2018664690. gost.e-ecolog.ru

[4] Космический мусор. Книга 1. Предупреждение образования и модели космического мусора под редакцией Г.Г. Райкунова — М: ФИЗМАТ ЛИТ, 2012. — 312 с.

УДК 629.78:006.354 ОКС 49.140

Ключевые слова: космическая среда, модель, плотность потока, техногенное вещество

Редактор *Л.С. Зимилова*
Технический редактор *И.Е. Черепкова*
Корректор *Л.С. Лысенко*
Компьютерная верстка *Е.О. Асташина*

Сдано в набор 18.02.2022. Подписано в печать 14.03.2022. Формат 60×84⅛. Гарнитура Ариал.
Усл. печ. л. 13,02. Уч.-изд. л. 11,72.

Подготовлено на основе электронной версии, предоставленной разработчиком стандарта

Создано в единичном исполнении в ФГБУ «РСТ»
для комплектования Федерального информационного фонда стандартов,
117418 Москва, Нахимовский пр-т, д. 31, к. 2.

gost.e-ecolog.ru gost.e-ecolog.ru

gost.e-ecolog.ru