РОССИЙСКИЙ МОРСКОЙ РЕГИСТР СУДОХОДСТВА
RUSSIAN MARITIME REGISTER OF SHIPPING

ПРИЛОЖЕНИЕ К ПРАВИЛАМ И РУКОВОДСТВАМ
РОССИЙСКОГО МОРСКОГО РЕГИСТРА СУДОХОДСТВА

ПРОЦЕДУРНЫЕ ТРЕБОВАНИЯ, УНИФИЦИРОВАННЫЕ ИНТЕРПРЕТАЦИИ И РЕКОМЕНДАЦИИ МЕЖДУНАРОДНОЙ АССОЦИАЦИИ КЛАССИФИКАЦИОННЫХ ОБЩЕСТВ

SUPPLEMENT TO RULES AND GUIDELINES
OF RUSSIAN MARITIME REGISTER OF SHIPPING

IACS PROCEDURAL REQUIREMENTS, UNIFIED INTERPRETATIONS AND RECOMMENDATIONS

НД № 2-020101-109-R-E

2018

gost.e-ecolog.ru

Настоящее Приложение к правилам и руководствам Российского морского регистра судоходства содержит обязательные для применения процедурные требования и унифицированные интерпретации Международной ассоциации классификационных обществ (МАКО), а также рекомендации МАКО, ссылки на которые имеются в правилах и других нормативных документах Регистра.

Все материалы публикуются на английском языке.

Данный документ публикуется в электронном виде отдельным изданием и является обязательным Приложением к правилам Регистра.

The present Supplement to rules and guidelines of Russian Maritime Register of Shipping contains IACS Procedural Requirements and IACS Unified Interpretations compulsory for implementation, and IACS recommendations, which are referred to in the rules and other normative documents of the Register.

All materials are published in English.

The present document is published in electronic format as a separate edition and is a compulsory Supplement to the Register rules.

СОДЕРЖАНИЕ
CONTENTS

Процедурные требования МАКО
IACS Procedural Requirements

Номер документа Document number	Название документа Document name	Примечание Note
1. PR No. 38 (May 2013)	Procedure for calculation and verification of the Energy Efficiency Design Index (EEDI)	Document is applied from 1 July 2013

Применение: Руководство по применению положений международной конвенции МАРПОЛ 73/78, часть VI, пункт 2.6.16.
Application: Guidelines on the Application of Provisions of the International Convention MARPOL 73/78, part VI, para 2.6.16.

Унифицированные интерпретации МАКО
IACS Unified Interpretations

Номер документа Document number	Название документа Document name	Примечание Note
1. SC 191 (Rev.7 Jan 2015) (Corr.3 Jan 2017)	IACS Unified Interpretations (UI) SC 191 for the application of amended SOLAS regulation II-1/3-6 (resolution MSC.151(78)) and revised Technical provisions for means of access for Inspections (resolution MSC.158(78))	Document is applied from 1 July 2016

Применение: Правила классификации и постройки морских судов (2017), часть III, пункт 7.14.2.
Application: Rules for the Classification and Construction of Sea-Going Ships (2017), Part III, para 7.14.2.

2. SC 226 (Rev.1 Dec 2012)	IACS Unified Interpretations (UI) on the application of SOLAS regulations to conversions of Single-Hull Oil Tankers to Double-Hull Oil Tankers or Bulk Carriers	Document is applied from 1 January 2014

Применение: Правила классификации и постройки морских судов (2017), часть I, пункт 3.1.3.
Application: Rules for the Classification and Construction of Sea-Going Ships (2017), Part I, para 3.1.3.

3. SC 244 (Rev.1 Nov 2012) (Corr.1 Nov 2015)	Load testing of hooks for primary release of lifeboats and rescue boats	Document is applied from 1 January 2014

Применение: Правила по оборудованию морских судов (2017), часть II, пункт 1.3.2.1.
Application: Rules for the Equipment of Sea-Going Ships (2017), Part II, para 1.3.2.1.

4. SC 249 (Rev.1 Feb 2013)	Implementation of SOLAS II-1, Regulation 3-5 and MSC.1/Circ.1379	Document is applied from 1 July 2013

Применение: Правила технического наблюдения за постройкой судов и изготовлением материалов и изделий для судов, часть V, пункт 19.1.7.
Application: Rules for Technical Supervision during Construction of Ships and Manufacture of Materials and Products for Ships, Part V, para 19.1.7.

5. MPC2 (Rev. 1 Aug 2015)	Operational manuals for oil discharge monitoring and control systems	Document is applied from 1 July 2016

Применение: Правила технического наблюдения за постройкой судов и изготовлением материалов и изделий для судов, часть V, пункт 19.7.2.1.
Application: Rules for Technical Supervision during Construction of Ships and Manufacture of Materials and Products for Ships, Part V, para 19.7.2.1.

6. MPC6 (Rev. 1 Aug 2015) — Calculation of aggregate capacity of SBT — Document is applied from 1 July 2016

Применение: Руководство по применению положений международной конвенции МАРПОЛ 73/78, часть II, пункт 3.5.1.1.

Application: Guidelines on the Application of Provisions of the International Convention MARPOL 73/78, part VI, para 3.5.1.1.

7. MODU 1 (Rev.1 Oct 2015) — IACS Unified Interpretations for the application of MODU Code Chapter 2 paragraphs 2.1, 2.2, 2.3, 2.4 and revised technical provisions for means of access for inspections (resolution MSC.158(78)) — Document is applied from 1 January 2017

Применение: Правила классификации, постройки и оборудования плавучих буровых установок и морских стационарных платформ (2014), часть III, пункт 9.3.1.1.

Application: Rules for the Classification, Construction and Equipment of Mobile Offshore Drilling Units and Fixed Offshore Platforms (2014), Part III, para 9.3.1.1.

Рекомендации МАКО
IACS Recommendations

Номер документа Document number	Название документа Document name

1. Rec. No. 47 (Rev.7 June 2013) — Shipbuilding and Repair Quality Standard

Применение: Правила классификационных освидетельствований судов в эксплуатации (2017), часть I (пункт 5.13), приложение 2 (пункт 5.1.12), приложение 3 (пункт 7).
Правила технического наблюдения за постройкой судов и изготовлением материалов и изделий для судов, часть I, приложение 3 (пункт 7.4)

Application: Rules for the Classification Surveys of Ships in Service (2017), Part I (para 5.13), Appendix 2 (para 5.1.12), Appendix 3 (para 7).
Rules for Technical Supervision during Construction of Ships and Manufacture of Materials and Products for Ships, Part I, Appendix 3 (para 7.4)

2. Rec. No. 55 (Rev.1 June 2016) — General Cargo Ships – Guidance for Surveys, Assessment and Repair of Hull Structure

Применение: Правила классификационных освидетельствований судов в эксплуатации (2017), часть I (пункт 5.13), приложение 2 (пункт 5.1.12), приложение 3 (пункт 6).
Методические рекомендации по техническому наблюдению за ремонтом морских судов с Приложениями (2016), Приложение 1.

Application: Rules for the Classification Surveys of Ships in Service (2017), Part I (para 5.13), Appendix 2 (para 5.1.12), Appendix 3 (para 6).

3. Rec. No. 76 (Corr.1 Sept 2007) — IACS Guidelines for Surveys, Assessment and Repair of Hull Structure – Bulk Carriers

Применение: Правила классификационных освидетельствований судов в эксплуатации (2017), часть I (пункт 5.13), приложение 2 (пункт 5.1.12), приложение 3 (пункт 2).
Методические рекомендации по техническому наблюдению за ремонтом морских судов с Приложениями (2016), Приложение 1.

Application: Rules for the Classification Surveys of Ships in Service (2017), Part I (para 5.13), Appendix 2 (para 5.1.12), Appendix 3 (para 2).

4. Rec. No. 96 (April 2007) — Double Hull Oil Tankers – Guidelines for Surveys, Assessment and Repair of Hull Structures

Применение: Правила классификационных освидетельствований судов в эксплуатации (2017), часть I (пункт 5.13), приложение 2 (пункт 5.1.12), приложение 3 (пункт 10).
Методические рекомендации по техническому наблюдению за ремонтом морских судов с Приложениями (2016), Приложение 1.

Application: Rules for the Classification Surveys of Ships in Service (2017), Part I (para 5.13), Appendix 2 (para 5.1.12), Appendix 3 (para 10).

5. Rec. No. 132 (Dec 2013) — Human Element Recommendations for structural design of lighting, ventilation, vibration, noise, access & egress arrangements

Применение: Руководство по освидетельствованию условий труда и отдыха моряков на соответствие требованиям Конвенции 2006 года о труде в морском судоходстве (2016), пункты 2.1.22, 4.7.3. Руководство по освидетельствованию жилых помещений экипажа (2015), пункты 2.1.16, 4.1.2.8.

Application: Guidelines on On-board Maritime Labour Convention, 2006 (MLC) Inspection (2016), paras 2.1.22, 4.7.3.
Guidelines on On-board Inspection for Crew Accomodation (2015), paras 2.1.16, 4.1.2.8.

6. Rec. No. 142 (June 2016) LNG Bunkering Guidelines

Применение: Правила классификации и постройки морских судов (2017), часть XVII, пункт 11.2.2.

Application: Rules for the Classification and Construction of Sea-Going Ships (2017), Part XVII, para 11.2.2.

7. Rec. No. 146 (Aug 2016) Risk assessment as required by the IGF Code

Применение: Правила классификации и постройки морских судов (2017), часть XVII, пункт 9.1.4.19.

Application: Rules for the Classification and Construction of Sea-Going Ships (2017), Part XVII, para 9.1.4.19.

8. Rec. No.149 (May 2017) Guidance for applying the requirements of 15.4.1.2 and 15.4.1.3 of the IGC Code (on ships constructed on or after 1 July 2016)

Применение: Правила классификации и постройки судов для перевозки сжиженных газов наливом (2018), часть VI, пункт 3.20.2.

Application: Rules for the Classification and Construction of Ships Carrying Liquefied Gases in Bulk. Rules for the Classification and Construction of Ships Carrying Compressed Natural Gas (2018), Part VI, para 3.20.2.

9. Rec. No. 150 (May 2017) Vapour pockets not in communication with cargo tank vapour / liquid domes on liquefied gas carriers

Применение: Правила классификации и постройки судов для перевозки сжиженных газов наливом (2018), часть VI, пункт 3.16.11.

Application: Rules for the Classification and Construction of Ships Carrying Liquefied Gases in Bulk. Rules for the Classification and Construction of Ships Carrying Compressed Natural Gas (2018), Part VI, para 3.16.11.

10. Rec. No. 151 (July 2017) Recommendation for petroleum fuel treatment systems for marine diesel engines

Применение: Правила классификации и постройки морских судов (2019), часть VIII, пункт 13.8.1.

Application: Rules for the Classification and Construction of Sea-Going Ships (2019), Part VIII, para 13.8.1.

УНИФИЦИРОВАННЫЕ ИНТЕРПРЕТАЦИИ МАКО

IACS UNIFIED INTERPRETATIONS

SC 191 (Nov 2004) (Rev.1 May 2005) (Rev.2 Oct 2005) (Corr. Dec 2005) (Rev.3 Mar 2006) (Rev.4 Sept 2011) (Corr.1 Nov 2011) (Rev.5 May 2013) (Rev.6 May 2014) (Corr.1 Sept 2014) (Rev.7 Jan 2015) (Corr.1 June 2016) (Corr.2 Dec 2016) (Corr.3 Jan 2017)

IACS Unified Interpretations (UI) SC 191 for the application of amended SOLAS regulation II-1/3-6 (resolution MSC.151(78)) and revised Technical provisions for means of access for inspections (resolution MSC.158(78))

Note:

1. This UI is to be applied by IACS Members and Associates when acting as recognized organizations, authorized by flag State Administrations to act on their behalf, unless otherwise advised, from 1 January 2005.

2. Rev.1 (May 2005) introduced new Annex to UI SC 191. Rev.1 is to be applied by IACS Members and Associates from 1 July 2005.

3. Rev.2 (Oct.2005) re-categorized the Annex to UI SC191 (Rev.1) as Recommendation No.91.

   Rev.2 (Oct.2005 / Corr. Dec. 2005) is to be applied by IACS Members and Associates to ships contracted for construction on or after 1 May 2006.

   Refer to IMO MSC/Circ. 1176.

4. The 'contracted for construction' date means the date on which the contract to build the vessel is signed between the prospective owner and the shipbuilder. For further details about the date of 'contract for construction', refer to IACS Procedural Requirement (PR) No. 29.

5. Rev.3 is to be applied by IACS Members and Associates from 1 October 2006.

6. Rev.4 is to be applied by IACS Members to ships contracted for construction from 1 July 2012.

7. Rev.5 is to be applied by IACS Members to ships contracted for construction from 24 June 2013.

8. Rev.6 is to be applied by IACS Members to ships contracted for construction from 1 July 2015.

9. Rev.7 is to be applied by IACS Members to ships contracted for construction from 1 July 2016.

SC 191 (cont)

SOLAS regulation II-1/3-6, section 1

1 Application

1.1 Except as provided for in paragraph 1.2, this regulation applies to oil tankers of 500 gross tonnage and over and bulk carriers, as defined in regulation IX/1, of 20,000 gross tonnage and over, constructed on or after 1 January 2006.

1.2 Oil tankers of 500 gross tonnage and over constructed on or after 1 October 1994 but before 1 January 2005 shall comply with the provisions of regulation II-1/12-2 adopted by resolution MSC.27(61).

Interpretation

Oil tankers:

This regulation is only applicable to oil tankers having integral tanks for carriage of oil in bulk, which is contained in the definition of oil in Annex 1 of MARPOL 73/78. Independent oil tanks can be excluded.

Regulation II-1/3-6 is not normally applied to FPSO or FSO unless the Administration decides otherwise.

Technical Background

Means of Access (MA) specified in the Technical provisions contained in resolution MSC.158(78) are not specific with respect to the application to integral cargo oil tanks or also to independent cargo oil tanks. ESP requirements of oil tankers have been established assuming the target cargo oil tanks are integral tanks. The MA regulated under SOLAS regulation II-1/3-6 is for overall and close-up inspections as defined in regulation IX/1. Therefore it is assumed that the target cargo oil tanks are those of ESP, i.e. integral cargo tanks.

Regulation II-1/3-6 is applicable to FPSO or FSO if they are subject to the scope of ESP as contained in resolution A.1049(27) (2011 ESP Code), as amended.

Ref.

SOLAS regulation IX/1 and resolution A.1049(27) (2011 ESP Code), as amended.

SC 191 (cont)

SOLAS regulation II-1/3-6, paragraph 2.1

2.1 Each space shall be provided with a permanent means of access to enable, throughout the life of a ship, overall and close-up inspections and thickness measurements of the ship's structures to be carried out by the Administration, the company, as defined in regulation IX/1, and the ship's personnel and others as necessary. Such means of access shall comply with the requirements of paragraph 5 and with the Technical provisions for means of access for inspections, adopted by the Maritime Safety Committee by resolution MSC.133(76), as may be amended by the Organization, provided that such amendments are adopted, brought into force and take effect in accordance with the provisions of article VIII of the present Convention concerning the amendment procedures applicable to the Annex other than chapter 1.

Interpretation

Each space for which close-up inspection is not required such as fuel oil tanks and void spaces forward of cargo area, may be provided with a means of access necessary for overall survey intended to report on the overall conditions of the hull structure.

SC 191 (cont)

SOLAS regulation II-1/3-6, paragraph 2.2

2.2 Where a permanent means of access may be susceptible to damage during normal cargo loading and unloading operations or where it is impracticable to fit permanent means of access, the Administration may allow, in lieu thereof, the provision of movable or portable means of access, as specified in the Technical provisions, provided that the means of attaching, rigging, suspending or supporting the portable means of access forms a permanent part of the ship's structure. All portable equipment shall be capable of being readily erected or deployed by ship's personnel.

Interpretation

Some possible alternative means of access are listed under paragraph 3.9 of the Technical Provisions for means of access for inspection(TP). Always subject to acceptance as equivalent by the Administration, alternative means such as an unmanned robot arm, ROV's and dirigibles with necessary equipment of the permanent means of access for overall and close-up inspections and thickness measurements of the deck head structure such as deck transverses and deck longitudinals of cargo oil tanks and ballast tanks, are to be capable of:

- safe operation in ullage space in gas-free environment;
- introduction into the place directly from a deck access.

When considering use of alternative means of access as addressed by paragraph 3.9 of the TP, refer to IACS Recommendation No.91 "Guidelines for Approval/Acceptance of Alternative Means of Access".

Technical Background

Innovative approaches, in particular a development of robot in place of elevated passageways, are encouraged and it is considered worthwhile to provide the functional requirement for the innovative approach.

SC 191 (cont)

SOLAS regulation II-1/3-6, paragraph 2.3

2.3 The construction and materials of all means of access and their attachment to the ship's structure shall be to the satisfaction of the Administration. The means of access shall be subject to survey prior to, or in conjunction with, its use in carrying out surveys in accordance with regulation I/10.

Interpretation

Inspection

The MA arrangements, including portable equipment and attachments, are to be periodically inspected by the crew or competent inspectors as and when it is going to be used to confirm that the MAs remain in serviceable condition.

Procedures

1. Any Company authorised person using the MA shall assume the role of inspector and check for obvious damage prior to using the access arrangements. Whilst using the MA the inspector is to verify the condition of the sections used by close up examination of those sections and note any deterioration in the provisions. Should any damage or deterioration be found, the effect of such deterioration is to be assessed as to whether the damage or deterioration affects the safety for continued use of the access. Deterioration found that is considered to affect safe use is to be determined as "substantial damage" and measures are to be put in place to ensure that the affected section(s) are not to be further used prior effective repair.

2. Statutory survey of any space that contains MA shall include verification of the continued effectiveness of the MA in that space. Survey of the MA shall not be expected to exceed the scope and extent of the survey being undertaken. If the MA is found deficient the scope of survey is to be extended if this is considered appropriate.

3. Records of all inspections are to be established based on the requirements detailed in the ships Safety Management System. The records are to be readily available to persons using the MAs and a copy attached to the MA Manual. The latest record for the portion of the MA inspected is to include as a minimum the date of the inspection, the name and title of the inspector, a confirmation signature, the sections of MA inspected, verification of continued serviceable condition or details of any deterioration or substantial damage found. A file of permits issued is to be maintained for verification.

Technical Background

It is recognised that MA may be subject to deterioration in the long term due to corrosive environment and external forces from ship motions and sloshing of liquid contained in the tank. MA therefore is to be inspected at every opportunity of tank/space entry. The above interpretation is to be contained in a section of the MA Manual.

SC 191 (cont)

SOLAS regulation II-1/3-6, paragraph 3.1

3 Safe access to cargo holds, cargo tanks, ballast tanks and other spaces

3.1 Safe access* to cargo holds, cofferdams, ballast tanks, cargo tanks and other spaces in the cargo area shall be direct from the open deck and such as to ensure their complete inspection. Safe access to double bottom spaces or to forward ballast tanks may be from a pump-room, deep cofferdam, pipe tunnel, cargo hold, double hull space or similar compartment not intended for the carriage of oil or hazardous cargoes.

* Refer to the Revised recommendations for entering enclosed spaces aboard ships, adopted by the Organization by resolution A.1050(27).

Interpretation

Access to a double side skin space of bulk carriers may be either from a topside tank or double bottom tank or from both.

The wording "not intended for the carriage of oil or hazardous cargoes" applies only to "similar compartments", i.e. safe access can be through a pump-room, deep cofferdam, pipe tunnel, cargo hold or double hull space.

Technical Background

Unless used for other purposes, the double side skin space is to be designed as a part of a large U-shaped ballast tank and such space is to be accessed through the adjacent part of the tank, i.e. topside tank or double bottom/bilge hopper tank. Access to the double side skin space from the adjacent part rather than direct from the open deck is justified. Any such arrangement is to provide a directly routed, logical and safe access that facilitates easy evacuation of the space.

SC 191 (cont)

SOLAS regulation II-1/3-6, paragraph 3.2

3.2 Tanks, and subdivisions of tanks, having a length of 35 m or more shall be fitted with at least two access hatchways and ladders, as far apart as practicable. Tanks less than 35 m in length shall be served by at least one access hatchway and ladder. When a tank is subdivided by one or more swash bulkheads or similar obstructions which do not allow ready means of access to the other parts of the tank, at least two hatchways and ladders shall be fitted.

Interpretation

A cargo oil tank of less than 35 m length without a swash bulkhead requires only one access hatch.

Where rafting is indicated in the ship structures access manual as the means to gain ready access to the under deck structure, the term "*similar obstructions*" referred to in the regulation includes internal structures (e.g., webs >1.5m deep) which restrict the ability to raft (at the maximum water level needed for rafting of under deck structure) directly to the nearest access ladder and hatchway to deck. When rafts or boats alone, as an alternative means of access, are allowed under the conditions specified in resolution A.1049(27) (2011 ESP Code), as amended, permanent means of access are to be provided to allow safe entry and exit. This means:

a) access direct from the deck via a vertical ladder and small platform fitted approximately 2m below the deck in each bay; or

b) access to deck from a longitudinal permanent platform having ladders to deck in each end of the tank. The platform shall, for the full length of the tank, be arranged in level with, or above, the maximum water level needed for rafting of under deck structure. For this purpose, the ullage corresponding to the maximum water level is to be assumed not more than 3m from the deck plate measured at the midspan of deck transverses and in the middle length of the tank. (See Figure below). A permanent means of access from the longitudinal permanent platform to the water level indicated above is to be fitted in each bay (e.g., permanent rungs on one of the deck webs inboard of the longitudinal permanent platform).

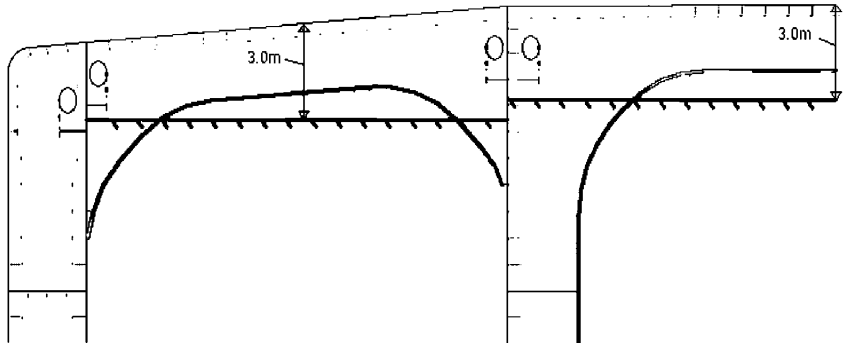

SC 191 (cont)

SOLAS regulation II-1/3-6, paragraph 4.1

4 Ship structure access manual

4.1 A ship's means of access to carry out overall and close-up inspections and thickness measurements shall be described in a Ship structure access manual approved by the Administration, an updated copy of which shall be kept on board. The Ship structure access manual shall include the following for each space:

.1 plans showing the means of access to the space, with appropriate technical specifications and dimensions;

.2 plans showing the means of access within each space to enable an overall inspection to be carried out, with appropriate technical specifications and dimensions. The plans shall indicate from where each area in the space can be inspected;

.3 plans showing the means of access within the space to enable close-up inspections to be carried out, with appropriate technical specifications and dimensions. The plans shall indicate the positions of critical structural areas, whether the means of access is permanent or portable and from where each area can be inspected;

.4 instructions for inspecting and maintaining the structural strength of all means of access and means of attachment, taking into account any corrosive atmosphere that may be within the space;

.5 instructions for safety guidance when rafting is used for close-up inspections and thickness measurements;

.6 instructions for the rigging and use of any portable means of access in a safe manner;

.7 an inventory of all portable means of access; and

.8 records of periodical inspections and maintenance of the ship's means of access.

Interpretation

The access manual is to address spaces listed in paragraph 3 of the regulation II-1/3-6.

As a minimum the English version is to be provided.

The ship structure access manual is to contain at least the following two parts:

Part 1: Plans, instructions and inventory required by paragraphs 4.1.1 to 4.1.7 of regulation II-1/3-6. This part is to be approved by the Administration or the organization recognised by the Administration.

Part 2: Form of record of inspections and maintenance, and change of inventory of portable equipment due to additions or replacement after construction. This part is to be approved for its form only at new building.

The following matters are to be addressed in the ship structure access manual:

1. The access manual is to clearly cover scope as specified in the regulations for use by crews, surveyors and port State control officers.

SC 191 (cont)

2. Approval / re-approval procedure for the manual, i.e. any changes of the permanent, portable, movable or alternative means of access within the scope of the regulation and the Technical provisions are subject to review and approval by the Administration or by the organization recognised by the Administration.

3. Verification of MA is to be part of safety construction survey for continued effectiveness of the MA in that space which is subject to the statutory survey.

4. Inspection of MA by the crew and/or a competent inspector of the company as a part of regular inspection and maintenance (see interpretation for paragraph 2.3 of SOLAS regulation II-1/3-6).

5. Actions to be taken if MA is found unsafe to use.

6. In case of use of portable equipment plans showing the means of access within each space indicating from where and how each area in the space can be inspected.

Refer to IACS Recommendation No.90 "Ship Structural Access Manual"

SC 191 (cont)

SOLAS regulation II-1/3-6, paragraph 4.2

4.2 For the purpose of this regulation "critical structural areas" are locations which have been identified from calculations to require monitoring or from the service history of similar or sister ships to be sensitive to cracking, buckling, deformation or corrosion which would impair the structural integrity of the ship.

Interpretation

1) Critical structural areas are to be identified by advanced calculation techniques for structural strength and fatigue performance, if available, and feed back from the service history and design development of similar or sister ships.

2) Reference is to be made to the following publications for critical structural areas, where applicable:

- Oil tankers: Guidance Manual for Tanker Structures by TSCF;
- Bulk carriers: Bulk Carriers Guidelines for Surveys, Assessment and Repair of Hull Structure by IACS;
- Oil tankers and bulk carriers: resolution A.1049(27) (2011 ESP Code), as amended.

Technical Background

These documents contain the relevant information for the present ship types. However identification of critical areas for new double hull tankers and double side skin bulk carriers of improved structural design is to be made by structural analysis at the design stage, this information is to be taken in to account to ensure appropriate access to all identified critical areas.

SC 191 (cont)

SOLAS regulation II-1/3-6, paragraph 5.1

5 General technical specifications

5.1 For access through horizontal openings, hatches or manholes, the dimensions shall be sufficient to allow a person wearing a self-contained air-breathing apparatus and protective equipment to ascend or descend any ladder without obstruction and also provide a clear opening to facilitate the hoisting of an injured person from the bottom of the space. The minimum clear opening shall not be less than 600 mm x 600 mm. When access to a cargo hold is arranged through the cargo hatch, the top of the ladder shall be placed as close as possible to the hatch coaming. Access hatch coamings having a height greater than 900 mm shall also have steps on the outside in conjunction with the ladder.

Interpretation

The minimum clear opening of 600 mm x 600 mm may have corner radii up to 100 mm maximum. The clear opening is specified in MSC/Circ.686 to keep the opening fit for passage of personnel wearing a breathing apparatus. In such a case where as a consequence of structural analysis of a given design the stress is to be reduced around the opening, it is considered appropriate to take measures to reduce the stress such as making the opening larger with increased radii, e.g. 600 x 800 with 300 mm radii, in which a clear opening of 600 x 600 mm with corner radii up to 100mm maximum fits.

Technical Background

The interpretation is based upon the established Guidelines in MSC/Circ.686.

Ref.

Paragraphs 9 of Annex of MSC/Circ.686.

SC 191 (cont)

SOLAS regulation II-1/3-6, paragraph 5.2

5.2 For access through vertical openings, or manholes, in swash bulkheads, floors, girders and web frames providing passage through the length and breadth of the space, the minimum opening shall be not less than 600 mm x 800 mm at a height of not more than 600 mm from the bottom shell plating unless gratings or other foot holds are provided.

Interpretation

1. The minimum clear opening of not less than 600 mm x 800 mm may also include an opening with corner radii of 300 mm. An opening of 600mm in height x 800mm in width may be accepted as access openings in vertical structures where it is not desirable to make large opening in the structural strength aspects, i.e. girders and floors in double bottom tanks.

2. Subject to verification of easy evacuation of injured person on a stretcher the vertical opening 850 mm x 620 mm with wider upper half than 600 mm, while the lower half may be less than 600 mm with the overall height not less than 850 mm is considered an acceptable alternative to the traditional opening of 600 mm x 800 mm with corner radii of 300 mm.

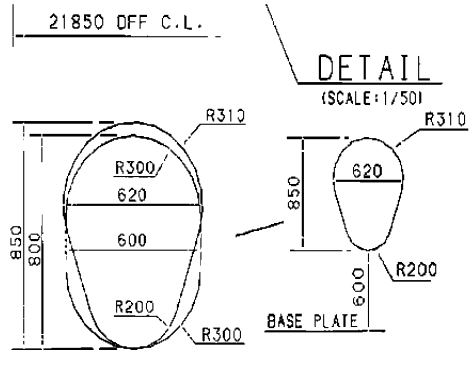

3. If a vertical opening is at a height of more than 600 mm steps and handgrips are to be provided. In such arrangements it is to be demonstrated that an injured person can be easily evacuated.

Technical Background

The interpretation is based upon the established Guidelines in MSC/Circ.686 and an innovative design is considered for easy access by humans through the opening.

Ref.

Paragraphs 11 of Annex of MSC/Circ.686.

SC 191 (cont)

Technical Provision, resolution MSC.158(78), paragraph 1.3

1. Preamble

1.3 In order to address this issue, the Organization has developed these Technical provisions for means of access for inspections (hereinafter called the "Technical provisions"), intended to facilitate close-up inspections and thickness measurements of the ship's structure referred to in SOLAS regulation II-1/3-6 on Access to and within spaces in, and forward of, the cargo area of oil tankers and bulk carriers. The Technical provisions do not apply to the cargo tanks of combined chemical/oil tankers complying with the provisions of the IBC Code.

Interpretation

A "combined chemical/oil tankers complying with the provisions of the IBC Code" is a tanker that holds both a valid IOPP certificate as tanker and a valid certificate of fitness for the carriage of dangerous chemicals in bulk. i.e. a tanker that is certified to carry both oil cargoes under MARPOL Annex I and Chemical cargoes in chapter 17 of the IBC Code either as full or part cargoes.

The Technical provisions are to be applied to ballast tanks of combined chemical/oil tankers complying with the provisions of the IBC Code.

SC 191 (cont)

Technical Provision, resolution MSC.158(78), paragraph 1.4

1. Preamble

1.4 Permanent means of access which are designed to be integral parts of the structure itself are preferred and Administrations may allow reasonable deviations to facilitate such designs.

Interpretation

In the context of the above requirement, the deviation shall be applied only to distances between integrated PMA that are the subject of paragraph 2.1.2 of Table 1.

Deviations shall not be applied to the distances governing the installation of underdeck longitudinal walkways and dimensions that determine whether permanent access are required or not, such as height of the spaces and height to elements of the structure (e.g. cross-ties).

SC 191 (cont)

Technical Provision, resolution MSC.158(78), paragraph 3.1

3.1 Structural members subject to the close-up inspections and thickness measurements of the ship's structure referred to in SOLAS regulation II-1/ 3-6, except those in double bottom spaces, shall be provided with a permanent means of access to the extent as specified in table 1 and table 2, as applicable. For oil tankers and wing ballast tanks of ore carriers, approved alternative methods may be used in combination with the fitted permanent means of access, provided that the structure allows for its safe and effective use.

Interpretation

The permanent means of access to a space can be credited for the permanent means of access for inspection.

Technical Background

The Technical provisions specify means of access to a space and to hull structure for carrying out overall and close up surveys and inspections. Requirements of MA to hull structure may not always be suitable for access to a space. However if the MA for access to a space can also be used for the intended surveys and inspections such MA can be credited for the MA for use for surveys and inspections.

SC 191 (cont)

Technical Provision, resolution MSC.158(78), paragraph 3.3

3.3 Elevated passageways forming sections of a permanent means of access, where fitted, shall have a minimum clear width of 600 mm, except for going around vertical webs where the minimum clear width may be reduced to 450 mm, and have guard rails over the open side of their entire length. Sloping structure providing part of the access shall be of a non-skid construction. Guard rails shall be 1,000 mm in height and consist of a rail and intermediate bar 500 mm in height and of substantial construction. Stanchions shall be not more than 3 m apart.

Interpretation

1. Sloping structures are structures that are sloped by 5 or more degrees from horizontal plane when a ship is in upright position at even-keel.

2. Guard rails are to be fitted on the open side and should be at least 1,000 mm in height. For stand alone passageways guard rails are to be fitted on both sides of these structures. Guardrail stanchions are to be attached to the PMA. The distance between the passageway and the intermediate bar and the distance between intermediate bar and the top rail shall not be more than 500 mm.

3. Discontinuous top handrails are allowed, provided the gap does not exceed 50 mm.

The same maximum gap is to be considered between the top handrail and other structural members (i.e. bulkhead, web frame, etc.).

The maximum distance between the adjacent stanchions across the handrail gaps is to be 350 mm where the top and mid handrails are not connected together and 550 mm when they are connected together.

The maximum distance between the stanchion and other structural members is not to exceed 200 mm where the top and mid handrails are not connected together and 300 mm when they are connected together.

When the top and mid handrails are connected by a bent rail, the outside radius of the bent part is not to exceed 100 mm (see Figure below).

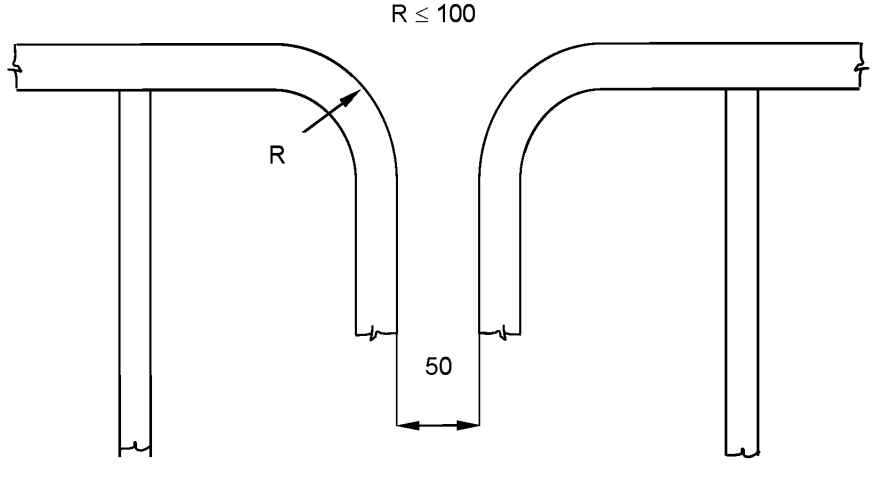

SC 191 (cont)

4. Non-skid construction is such that the surface on which personnel walks provides sufficient friction to the sole of boots even if the surface is wet and covered with thin sediment.

5. "Substantial construction" is taken to refer to the as-designed strength as well as the residual strength during the service life of the vessel. Durability of passageways together with guard rails is to be ensured by the initial corrosion protection and inspection and maintenance during services.

6. For guard rails, use of alternative materials such as GRP is to be subject to compatibility with the liquid carried in the tank. Non-fire resistant materials are not to be used for means of access to a space with a view to securing an escape route at a high temperature.

7. Requirements for resting platforms placed between ladders are equivalent to those applicable to elevated passageways.

Ref.

Paragraph 10 of Annex to MSC/Circ.686

SC 191 (cont)

Technical Provision, resolution MSC.158(78), paragraph 3.4

3.4 Access to permanent means of access and vertical openings from the ship's bottom shall be provided by means of easily accessible passageways, ladders or treads. Treads shall be provided with lateral support for the foot. Where the rungs of ladders are fitted against a vertical surface, the distance from the centre of the rungs to the surface shall be at least 150 mm. Where vertical manholes are fitted higher than 600 mm above the walking level, access shall be facilitated by means of treads and hand grips with platform landings on both sides.

Interpretation

Where the vertical manhole is at a height of more than 600 mm above the walking level, it shall be demonstrated that an injured person can be easily evacuated.

SC 191 (cont)

Technical Provision, resolution MSC.158(78), paragraph 3.5

3.5 Permanent inclined ladders shall be inclined at an angle of less than 70°. There shall be no obstructions within 750 mm of the face of the inclined ladder, except that in way of an opening this clearance may be reduced to 600 mm. Resting platforms of adequate dimensions shall be provided normally at a maximum of 6 m vertical height. Ladders and handrails shall be constructed of steel or equivalent material of adequate strength and stiffness and securely attached to the structure by stays. The method of support and length of stay shall be such that vibration is reduced to a practical minimum. In cargo holds, ladders shall be designed and arranged so that cargo handling difficulties are not increased and the risk of damage from cargo handling gear is minimized.

MA for access to ballast tanks, cargo tanks and spaces other than fore peak tanks:

For oil tankers:

1. Tanks and subdivisions of tanks having a length of 35 m or more with two access hatchways:

First access hatchway: Inclined ladder or ladders are to be used.

Second access hatchway:

i. A vertical ladder may be used. In such a case where the vertical distance is more than 6 m, vertical ladders are to comprise one or more ladder linking platforms spaced not more than 6 m apart vertically and displaced to one side of the ladder.

The uppermost section of the vertical ladder, measured clear of the overhead obstructions in way of the tank entrance, is not to be less than 2.5 m but not exceed 3.0 m and is to comprise a ladder linking platform which is to be displaced to one side of a vertical ladder. However, the vertical distance of the upper most section of the vertical ladder may be reduced to 1.6 m, measured clear of the overhead obstructions in way of the tank entrance, if the ladder lands on a longitudinal or athwartship permanent means of access fitted within that range. Adjacent sections of the ladder are to be laterally offset from each other by at least the width of the ladder (see paragraph 20 of MSC/Circ.686 and refer to the interpretation of Technical Provision, resolution MSC.158(78), paragraph 3.13.2 and paragraph 3.13.6); or

ii. Where an inclined ladder or combination of ladders is used for access to the space, the uppermost section of the ladder, measured clear of the overhead obstructions in way of the tank entrance, is to be vertical for not less than 2.5 m but not exceed 3.0m and is to comprise a landing platform continuing with an inclined ladder. However, the vertical distance of the upper most section of the vertical ladder may be reduced to 1.6 m, measured clear of the overhead obstructions in way of the tank entrance, if the ladder lands on a longitudinal or athwartship permanent means of access fitted within that range. The flights of the inclined ladders are normally to be not more than 6 m in vertical height. The lowermost section of the ladders may be vertical for the vertical distance not exceeding 2.5 m.

2. Tanks less than 35 m in length and served by one access hatchway an inclined ladder or combination of ladders are to be used to the space as specified in 1.ii above.

3. In spaces of less than 2.5 m width the access to the space may be by means of vertical ladders that comprises one or more ladder linking platforms spaced not more than 6 m apart vertically and displaced to one side of the ladder. The uppermost section of the vertical ladder, measured clear of the overhead obstructions in way of the tank

SC 191 (cont)

entrance, is not to be less than 2.5 m but not exceed 3.0 m and is to comprise a ladder linking platform which is to be displaced to one side of a vertical ladder. However, the vertical distance of the upper most section of the vertical ladder may be reduced to 1.6 m, measured clear of the overhead obstructions in way of the tank entrance, if the ladder lands on a longitudinal or athwartship permanent means of access fitted within that range. Adjacent sections of the ladder are to be laterally offset from each other by at least the width of the ladder (see paragraph 20 of MSC/Circ.686 and refer to the interpretation of Technical Provision, resolution MSC.158(78), paragraph 3.13.2 and paragraph 3.13.6).

4. Access from deck to a double bottom space may be by means of vertical ladders through a trunk. The vertical distance from deck to a resting platform, between resting platforms or a resting platform and the tank bottom is not to be more than 6 m unless otherwise approved by the Administration.

MA for inspection of the vertical structure of oil tankers:

Vertical ladders provided for means of access to the space may be used for access for inspection of the vertical structure.

Unless stated otherwise in Table 1 of TP, vertical ladders that are fitted on vertical structures for inspection are to comprise one or more ladder linking platforms spaced not more than 6 m apart vertically and displace to one side of the ladder. Adjacent sections of ladder are to be laterally offset from each other by at least the width of the ladder (paragraph 20 of MSC/Circ.686 and refer to the interpretation of Technical Provision, resolution MSC.158(78), paragraph 3.13.2 and paragraph 3.13.6).

Obstruction distances

The minimum distance between the inclined ladder face and obstructions, i.e. 750 mm and, in way of openings, 600 mm specified in TP 3.5 is to be measured perpendicular to the face of the ladder.

Technical Background

It is a common practice to use a vertical ladder from deck to the first landing to clear overhead obstructions before continuing to an inclined ladder or a vertical ladder displaced to one side of the first vertical ladder.

Ref.

For vertical ladders: Paragraph 20 of the annex to MSC/Circ.686.

SC 191 (cont)

Technical Provision, resolution MSC.158(78), paragraph 3.6

3.6 The width of inclined ladders between stringers shall not be less than 400 mm. The treads shall be equally spaced at a distance apart, measured vertically, of between 200 mm and 300 mm. When steel is used, the treads shall be formed of two square bars of not less than 22 mm by 22 mm in section, fitted to form a horizontal step with the edges pointing upward. The treads shall be carried through the side stringers and attached thereto by double continuous welding. All inclined ladders shall be provided with handrails of substantial construction on both sides fitted at a convenient distance above the treads.

Interpretation

1. Vertical height of handrails is not to be less than 890 mm from the center of the step and two course handrails need only be provided where the gap between stringer and top handrail is greater than 500 mm.

2. The requirement of two square bars for treads specified in TP, paragraph 3.6, is based upon the specification of construction of ladders in paragraph 3(e) of Annex 1 to resolution A.272(VIII), which addresses inclined ladders. TP, paragraph 3.4, allows for single rungs fitted to vertical surfaces, which is considered for a safe grip. For vertical ladders, when steel is used, the rungs are to be formed of single square bars of not less than 22 mm by 22 mm for the sake of safe grip.

3. The width of inclined ladders for access to a cargo hold is to be at least 450 mm to comply with the Australian AMSA Marine Orders Part 32, Appendix 17.

4. The width of inclined ladders other than an access to a cargo hold is to be not less than 400 mm.

5. The minimum width of vertical ladders is to be 350 mm and the vertical distance between the rungs is to be equal and is to be between 250 mm and 350 mm.

6. A minimum climbing clearance in width is to be 600 mm other than the ladders placed between the hold frames.

7. The vertical ladders are to be secured at intervals not exceeding 2.5 m apart to prevent vibration.

Technical Background

- TP, paragraph 3.6, is a continuation of TP, paragraph 3.5, which addresses inclined ladders. Interpretations for vertical ladders are needed based upon the current standards of IMO, AMSA or the industry.

- Interpretations 2 and 5 address vertical ladders based upon the current standards.

- Double square bars for treads become too large for a grip for vertical ladders and single rungs facilitate a safe grip.

- Interpretation 7 is introduced consistently with the requirement and the interpretation of TP, paragraph 3.4.

SC 191 (cont)

Ref.

- Annex 1 to resolution A.272(VIII).
- Australian AMSA Marine Orders Part 32, Appendix 17.
- ILO Code of Practice “Safety and Health in Dockwork” – Section 3.6 Access to Ship’s Holds.

SC 191 (cont)

Technical Provision, resolution MSC.158(78), paragraph 3.9.6

3.9.6 Portable ladders more than 5 m long may only be utilized if fitted with a mechanical device to secure the upper end of the ladder.

Interpretation

A mechanical device such as hooks for securing at the upper end of a ladder is to be considered as an appropriate securing device if a movement fore/aft and sideways can be prevented at the upper end of the ladder.

Technical Background

Innovative design is to be accepted if it fits the functional requirement with due consideration for safe use.

SC 191 (cont)

Technical Provision, resolution MSC.158(78), paragraph 3.10 and 3.11

3.10 For access through horizontal openings, hatches or manholes, the minimum clear opening shall not be less than 600 mm x 600 mm. When access to a cargo hold is arranged through the cargo hatch, the top of the ladder shall be placed as close as possible to the hatch coaming. Access hatch coamings having a height greater than 900 mm shall also have steps on the outside in conjunction with the ladder.

3.11 For access through vertical openings, or manholes, in swash bulkheads, floors, girders and web frames providing passage through the length and breadth of the space, the minimum opening shall be not less than 600 mm x 800 mm at a height of not more than 600 mm from the passage unless gratings or other foot holds are provided.

Interpretation

See interpretation for paragraphs 5.1 and 5.2 of SOLAS regulation II-1/3-6.

SC 191 (cont)

Technical Provision, resolution MSC.158(78), paragraph 3.13.1

3.13. For bulk carriers, access ladders to a cargo hold shall be:

.1 where the vertical distance between the upper surface of adjacent decks or between deck and the bottom of the cargo space is not more than 6 m, either a vertical ladder or an inclined ladder; and

Interpretation

Either a vertical or an inclined ladder or a combination of them may be used for access to a cargo hold where the vertical distance is 6 m or less from the deck to the bottom of the cargo hold.

SC 191 (cont)

Technical Provision, resolution MSC.158(78), paragraph 3.13.2 and paragraph 3.13.6

3.13. For bulk carriers, access ladders to a cargo hold shall be:

.1 ....omissis.....

.2 Where the vertical distance between the upper surface of adjacent decks or between deck and the bottom of the cargo space is more than 6 m, an inclined ladder or series of inclined ladders at one end of the cargo hold, except the uppermost 2.5 m of a cargo space measured clear of overhead obstructions and the lowest 6 m may have vertical ladders, provided that the vertical extent of the inclined ladder or ladders connecting the vertical ladders is not less than 2.5 m.

The second means of access at the other end of the cargo hold may be formed of a series of staggered vertical ladders, which should comprise of one or more ladder linking platforms spaced not more than 6 m apart vertically and displaced to one side of the ladder. Adjacent sections of ladder should be laterally offset from each other by at least the width of the ladder. The uppermost entrance section of the ladder directly exposed to a cargo hold should be vertical for a distance of 2.5 m measured clear of overhead obstructions and connected to a ladder-linking platform.

.3 ....omissis.....

.4 ....omissis.....

.5 ....omissis.....

.6 In double-side skin spaces of less than 2.5 m width, the access to the space may be by means of vertical ladders that comprise of one or more ladder linking platforms spaced mnot more than 6 m apart vertically and displaced to one side of the ladder. Adjacent sections of ladder should be laterally offset from each other by at least the width of the ladder.

. 7 ....omissis.....

Interpretation

Adjacent sections of vertical ladder need to be installed so that the following provisions are complied with:

- the minimum "lateral offset" between two adjacent sections of vertical ladder, is the distance between the sections, upper and lower, so that the adjacent stringers are spaced at least 200 mm apart, measured from half thickness of each stringer.

- adjacent sections of vertical ladder shall be installed so that the upper end of the lower section is vertically overlapped, in respect to the lower end of the upper section, to a height of 1500 mm in order to permit a safe transfer between ladders.

- no section of the access ladder shall be terminated directly or partly above an access opening.

Technical Background

The aims of the above are to:

SC 191 (cont)

a. Reduce the risk of accidents due to tiredness by providing a rest platform at appropriate intervals.

b. Reduce the risk of collateral injury from falling or dropping items of equipment by preventing the lateral overlap of two ladders.

SC 191 (cont)

Figure "A"
Vertical Ladder – Ladder through the linking platform

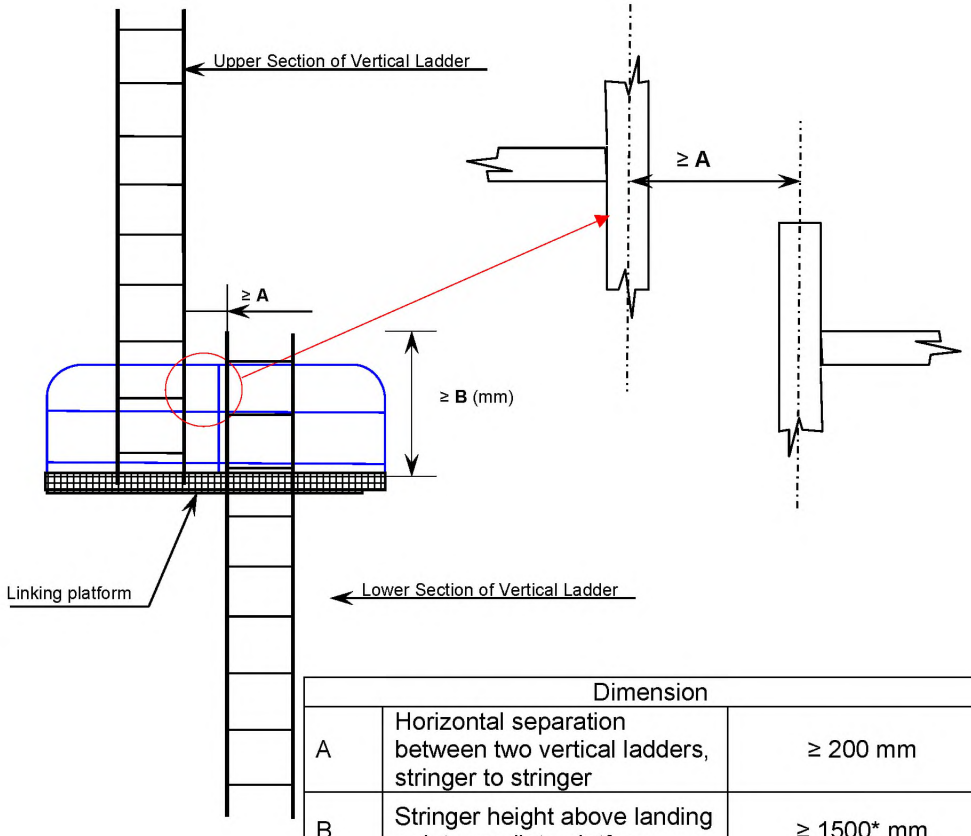

Dimension		
A	Horizontal separation between two vertical ladders, stringer to stringer	≥ 200 mm
B	Stringer height above landing or intermediate platform	≥ 1500* mm
C	Horizontal separation between ladder and platform	100 mm ≤C< 300 mm
*Note: the minimum height of the handrail of resting platform is of 1000 mm (Technical Provision, resolution MSC.158(78), paragraph 3.3)		

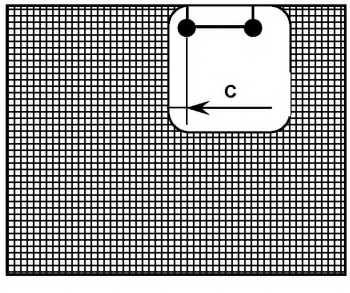

SC 191 (cont)

Figure "B"
Vertical Ladder – Side mount

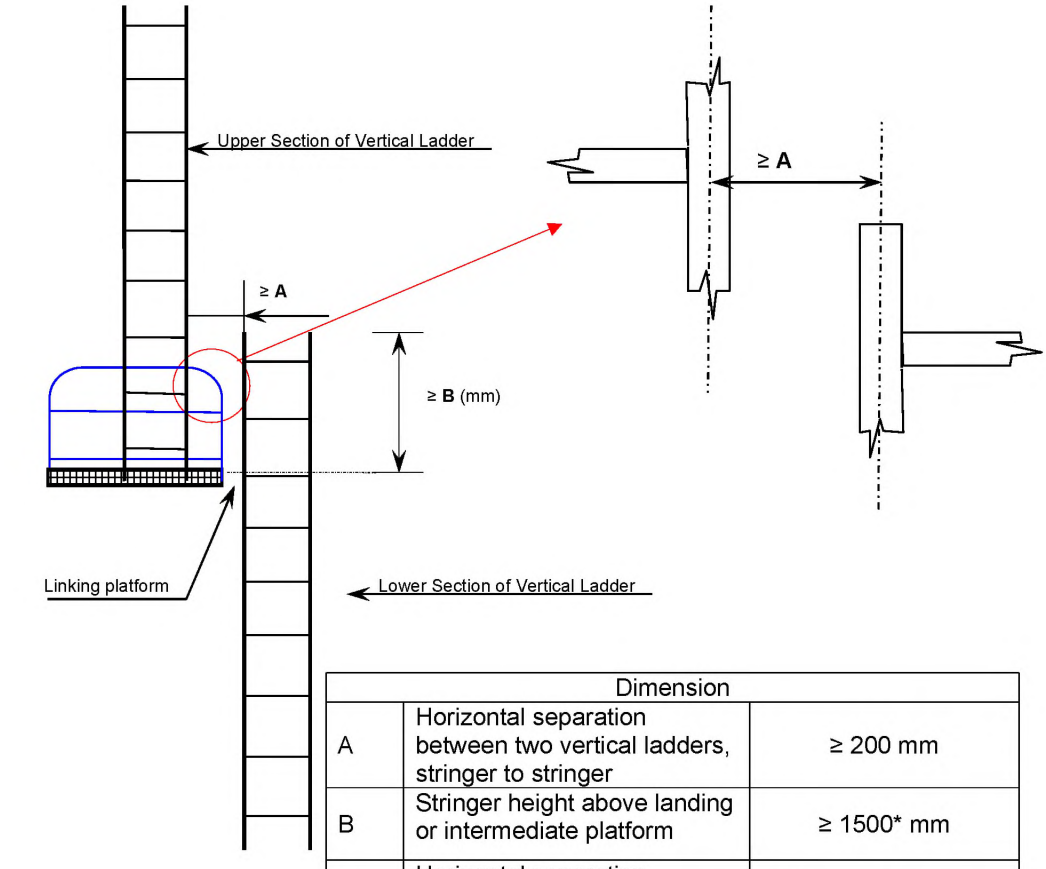

Dimension		
A	Horizontal separation between two vertical ladders, stringer to stringer	≥ 200 mm
B	Stringer height above landing or intermediate platform	≥ 1500* mm
C	Horizontal separation between ladder and platform	100 mm ≤C< 300 mm
*Note: the minimum height of the handrail of resting platform is of 1000 mm (Technical Provision, resolution MSC.158(78), paragraph 3.3)		

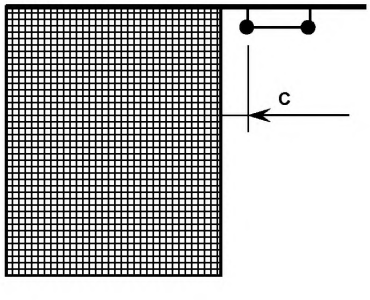

SC 191 (cont)

Technical Provision, resolution MSC.158(78), paragraph 3.14

3.14 The uppermost entrance section from deck of the vertical ladder providing access to a tank should be vertical for a distance of 2.5 m measured clear of overhead obstructions and comprise a ladder linking platform, displaced to one side of a vertical ladder. The vertical ladder can be between 1.6 m and 3 m below deck structure if it lands on a longitudinal or athwartship permanent means of access fitted within that range.

Interpretation

Deck is defined as “weather deck”.

SC 191 (cont)

Table 1 – Means of access for oil tankers, resolution MSC.158(78), paragraph 1.1

1 Water ballast tanks, except those specified in the right column, and cargo oil tanks

Access to overhead structure

1.1 For tanks of which the height is 6 m and over containing internal structures, permanent means of access shall be provided in accordance with .1 to .6:

Interpretation

1. Sub-paragraphs .1, .2 and .3 define access to underdeck structure, access to the uppermost sections of transverse webs and connection between these structures.

2. Sub-paragraphs .4, .5 and .6 define access to vertical structures only and are linked to the presence of transverse webs on longitudinal bulkheads.

3. If there are no underdeck structures (deck longitudinals and deck transverses) but there are vertical structures in the cargo tank supporting transverse and longitudinal bulkheads, access in accordance with sub-paragraphs from .1 through to .6 is to be provided for inspection of the upper parts of vertical structure on transverse and longitudinal bulkheads.

4. If there is no structure in the cargo tank, section 1.1 of Table 1 is not to be applied.

5. Section 1 of Table 1 is also to be applied to void spaces in cargo area, comparable in volume to spaces covered by the regulation II-1/3-6, except those spaces covered by Section 2.

6. The vertical distance below the overhead structure is to be measured from the underside of the main deck plating to the top of the platform of the means of access at a given location.

7. The height of the tank is to be measured at each tank. For a tank the height of which varies at different bays, item 1.1 is to be applied to such bays of a tank that have height 6 m and over.

Technical Background

Interpretation 7: If the height of the tank is increasing along the length of a ship the permanent means of access is to be provided locally where the height is above 6 m.

Ref.

Paragraph 10 of the annex to MSC/Circ.686.

SC 191 (cont)

Table 1 – Means of access for oil tankers, resolution MSC.158(78), paragraph 1.1.2

1.1.2 at least one continuous longitudinal permanent means of access at each side of the tank. One of these accesses shall be at a minimum of 1.6 m to a maximum of 6 m below the deck head and the other shall be at a minimum of 1.6 m to a maximum of 3 m below the deck head;

Interpretation

There is need to provide continuous longitudinal permanent means of access when the deck longitudinals and deck transverses are fitted on deck but supporting brackets are fitted under the deck.

SC 191 (cont)

Table 1 – Means of access for oil tankers, resolution MSC.158(78), paragraph 1.1.3

1.1.3 access between the arrangements specified in .1 and .2 and from the main deck to either .1 or .2.

Interpretation

Means of access to tanks may be used for access to the permanent means of access for inspection.

Technical Background

As a matter of principle, in such a case where the means of access can be utilised for the purpose of accessing structural members for inspection there is no need of duplicated installation of the MA.

SC 191 (cont)

Table 1 – Means of access for oil tankers, resolution MSC.158(78), paragraph 1.1.4

1.1.4 continuous longitudinal permanent means of access which are integrated in the structural member on the stiffened surface of a longitudinal bulkhead, in alignment, where possible, with horizontal girders of transverse bulkheads are to be provided for access to the transverse webs unless permanent fittings are installed at the uppermost platform for use of alternative means as defined in paragraph 3.9 of the Technical provisions for inspection at intermediate heights;

Interpretation

The permanent fittings required to serve alternative means of access such as wire lift platform, that are to be used by crew and surveyors for inspection shall provide at least an equal level of safety as the permanent means of access stated by the same paragraph. These means of access shall be carried on board the ship and be readily available for use without filling of water in the tank.

Therefore, rafting is not to be acceptable under this provision.

Alternative means of access are to be part of Access Manual which is to be approved on behalf of the flag State.

For water ballast tanks of 5 m or more in width, such as on an ore carrier, side shell plating shall be considered in the same way as "longitudinal bulkhead".

SC 191 (cont)

Table 1 – Means of access for oil tankers, resolution MSC.158(78), paragraph 2.1

2 Water ballast wing tanks of less than 5 m width forming double side spaces and their bilge hopper sections

Access to the underdeck structure

2.1 For double side spaces above the upper knuckle point of the bilge hopper sections, permanent means of access are to be provided in accordance with .1 and .2:

Interpretation

Section 2 of Table 1 is also to be applied to wing tanks designed as void spaces.

Paragraph 2.1.1 represents requirements for access to underdeck structures, while paragraph 2.1.2 is a requirement for access for survey and inspection of vertical structures on longitudinal bulkheads (transverse webs).

Technical Background

Regulation II-1/3-6.2.1 requires each space to be provided with means of access. Though void spaces are not addressed in the technical provisions contained in resolution MSC.158(78) it is arguable whether MA is not required in void spaces. MA or portable means of access are necessary arrangement to facilitate inspection of the structural condition of the space and the boundary structure. Therefore the requirements of Section 2 of Table 1 is to be applied to double hull spaces even designed as void spaces.

SC 191 (cont)

Table 1 – Means of access for oil tankers, resolution MSC.158(78), paragraph 2.1.1

2. Wing water ballast tanks less than 5 m width forming double side spaces and their bilge hopper sections

Access to the underdeck structure

2.1.1 Where the vertical distance between horizontal uppermost stringer and deck head is 6 m or more, one continuous permanent means of access shall be provided for the full length of the tank with a means to allow passing through transverse webs installed a minimum of 1.6 m to a maximum of 3 m below the deck head with a vertical access ladder at each end of tank;

Interpretation

1. For a tank, the vertical distance between horizontal upper stringer and deck head of which varies at different sections, item 2.1.1 is to be applied to such sections that falls under the criteria.

2. The continuous permanent means of access may be a wide longitudinal, which provides access to critical details on the opposite side by means of platforms as necessary on web frames. In case the vertical opening of the web frame is located in way of the open part between the wide longitudinal and the longitudinal on the opposite side, platforms shall be provided on both sides of the web frames to allow safe passage through the web frame.

3. Where two access hatches are required by SOLAS regulation II-1/3-6.3.2, access ladders at each end of the tank are to lead to the deck.

Technical Background

Interpretation 1: The interpretation of varied tank height in item 1 of Table 1 is applied to the vertical distance between horizontal upper stringer and deck head for consistency.

SC 191 (cont)

Table 1 – Means of access for oil tankers, resolution MSC.158(78), paragraph 2.1.2

2.1.2 continuous longitudinal permanent means of access, which are integrated in the structure, at a vertical distance not exceeding 6 m apart; and

Interpretation

The continuous permanent means of access may be a wide longitudinal, which provides access to critical details on the opposite side by means of platforms as necessary on webframes. In case the vertical opening of the web is located in way of the open part between the wide longitudinal and the longitudinal on the opposite side, platforms shall be provided on both sides of the web to allow safe passage through the web.

A "reasonable deviation", as noted in TP, paragraph 1.4, of not more than 10% may be applied where the permanent means of access is integral with the structure itself.

SC 191 (cont)

Table 1 – Means of access for oil tankers, resolution MSC.158(78), paragraph 2.2

2.2 For bilge hopper sections of which the vertical distance from the tank bottom to the upper knuckle point is 6 m and over, one longitudinal permanent means of access shall be provided for the full length of the tank. It shall be accessible by vertical permanent means of access at both ends of the tank.

Interpretation

1. Permanent means of access between the longitudinal continuous permanent means of access and the bottom of the space is to be provided.

2. The height of a bilge hopper tank located outside of the parallel part of vessel is to be taken as the maximum of the clear vertical distance measured from the bottom plating to the hopper plating of the tank.

3. The foremost and aftmost bilge hopper ballast tanks with raised bottom, of which the height is 6 m and over, a combination of transverse and vertical MA for access to the upper knuckle point for each transverse web is to be accepted in place of the longitudinal permanent means of access.

Technical Background

Interpretation 2: The bilge hopper tanks at fore and aft of cargo area narrow due to raised bottom plating and the actual vertical distance from the bottom of the tank to hopper plating of the tank is more appropriate to judge if a portable means of access could be utilized for the purpose.

Interpretation 3: in the foremost or aftmost bilge hopper tanks where the vertical distance is 6 m or over but installation of longitudinal permanent means of access is not practicable permanent means of access of combination of transverse and vertical ladders provides an alternative means of access to the upper knuckle point.

SC 191 (cont)

Table 2 – Means of access for bulk carriers, resolution MSC.158(78), paragraph 1.1

1 Cargo holds

Access to underdeck structure

1.1 Permanent means of access shall be fitted to provide access to the overhead structure at both sides of the cross deck and in the vicinity of the centreline. Each means of access shall be accessible from the cargo hold access or directly from the main deck and installed at a minimum of 1.6 m to a maximum of 3 m below the deck.

Interpretation

1. Means of access shall be provided to the crossdeck structures of the foremost and aftermost part of the each cargo hold.

2. Interconnected means of access under the cross deck for access to three locations at both sides and in the vicinity of the centerline is to be acceptable as the three means of access.

3. Permanent means of access fitted at three separate locations accessible independently, one at each side and one in the vicinity of the centerline is to be acceptable.

4. Special attention is to be paid to the structural strength where any access opening is provided in the main deck or cross deck.

5. The requirements for bulk carrier cross deck structure is also to be considered applicable to ore carriers.

Technical Background

Pragmatic arrangements of the MA are provided.

SC 191 (cont)

Table 2 – Means of access for bulk carriers, resolution MSC.158(78), paragraph 1.3

1.3 Access to the permanent means of access to overhead structure of the cross deck may also be via the upper stool.

Interpretation

Particular attention is to be paid to preserve the structural strength in way of access opening provided in the main deck or cross deck.

SC 191 (cont)

Table 2 – Means of access for bulk carriers, resolution MSC.158(78), paragraph 1.4

1.4 Ships having transverse bulkheads with full upper stools with access from the main deck which allows monitoring of all framing and plates from inside, do not require permanent means of access of the cross deck.

Interpretation

"Full upper stools" are understood to be stools with a full extension between top side tanks and between hatch end beams.

SC 191 (cont)

Table 2 – Means of access for bulk carriers, resolution MSC.158(78), paragraph 1.5

1.5 Alternatively, movable means of access may be utilized for access to the overhead structure of cross deck if its vertical distance is 17 m or less above the tank top.

Interpretation

1. The movable means of access to the underdeck structure of cross deck need not necessarily be carried on board the vessel. It is sufficient if it is made available when needed.

2. The requirements for bulk carrier cross deck structure is also to be considered applicable to ore carriers.

SC 191 (cont)

Table 2 – Means of access for bulk carriers, resolution MSC.158(78), paragraph 1.6

Access to vertical structures

1.6 Permanent means of vertical access shall be provided in all cargo holds and built into the structure to allow for an inspection of a minimum of 25 % of the total number of hold frames port and starboard equally distributed throughout the hold including at each end in way of transverse bulkheads. But in no circumstance shall this arrangement be less than 3 permanent means of vertical access fitted to each side (fore and aft ends of hold and mid-span). Permanent means of vertical access fitted between two adjacent hold frames is counted for an access for the inspection of both hold frames. A means of portable access may be used to gain access over the sloping plating of lower hopper ballast tanks.

Interpretation

The maximum vertical distance of the rungs of vertical ladders for access to hold frames is to be 350 mm.

If safety harness is to be used, means are to be provided for connecting the safety harness in suitable places in a practical way.

Technical Background

The maximum vertical distance of the rungs of 350 mm is applied with a view to reducing trapping cargoes.

SC 191 (cont)

Table 2 – Means of access for bulk carriers, resolution MSC.158(78), paragraph 1.7

1.7 In addition, portable or movable means of access shall be utilized for access to the remaining hold frames up to their upper brackets and transverse bulkheads.

Interpretation

Portable, movable or alternative means of access also is to be applied to corrugated bulkheads.

SC 191 (cont)

Table 2 – Means of access for bulk carriers, resolution MSC.158(78), paragraph 1.8

1.8 Portable or movable means of access may be utilized for access to hold frames up to their upper bracket in place of the permanent means required in 1.6. These means of access shall be carried on board the ship and readily available for use.

Interpretation

Readily available means;-

Able to be transported to location in cargo hold and safely erected by ship's staff.

SC 191 (cont)

Table 2 – Means of access for bulk carriers, resolution MSC.158(78), paragraph 2.3

2.3 Three permanent means of access, fitted at the end bay and middle bay of each tank, shall be provided spanning from tank base up to the intersection of the sloping plate with the hatch side girder. The existing longitudinal structure may be used as part of this means of access.

Interpretation

If the longitudinal structures on the sloping plate are fitted outside of the tank a means of access is to be provided.

SC 191 (cont)

Table 2 – Means of access for bulk carriers, resolution MSC.158(78), paragraph 2.5

Bilge hopper tanks

2.5 For each bilge hopper tank of which the height is 6 m and over, one longitudinal continuous permanent means of access shall be provided along the side shell webs and installed at a minimum of 1.2 m below the top of the clear opening of the web ring with a vertical access ladder in the vicinity of each access to the tank.

Interpretation

1. The height of a bilge hopper tank located outside of the parallel part of vessel is to be taken as the maximum of the clear vertical height measured from the bottom plating to the hopper plating of the tank.

2. It is to be demonstrated that portable means for inspection can deployed and made readily available in the areas where needed.

SC 191 (cont)

Table 2 – Means of access for bulk carriers, resolution MSC.158(78), paragraph 2.5.2

Bilge hopper tanks

2.5.2 Alternatively, the longitudinal continuous permanent means of access can be located through the upper web plating above the clear opening of the web ring, at a minimum of 1.6 m below the deck head, when this arrangement facilitates more suitable inspection of identified structurally critical areas. An enlarged longitudinal frame can be used for the purpose of the walkway.

Interpretation

A wide longitudinal frame of at least 600 mm clear width may be used for the purpose of the longitudinal continuous permanent means of access. The foremost and aftermost bilge hopper ballast tanks with raised bottom, of which the height is 6 m and over, a combination of transverse and vertical MA for access to the sloping plate of hopper tank connection with side shell plating for each transverse web can be accepted in place of the longitudinal permanent means of access.

SC 191 (cont)

Table 2 – Means of access for bulk carriers, resolution MSC.158(78), paragraph 2.6

2.6 If no access holes are provided through the transverse ring webs within 600 mm of the tank base and the web frame rings have a web height greater than 1 m in way of side shell and sloping plating, then step rungs/grab rails shall be provided to allow safe access over each transverse web frame ring.

Interpretation

The height of web frame rings is to be measured in way of side shell and tank base.

Technical Background

In the bilge hopper tank the sloping plating is above the opening, while the movement of the surveyor is along the bottom of the tank. Therefore the measurement of 1 m is to be taken from the bottom of the tank.

End of Document

SC 226 (Nov 2008) (Rev.1 Dec 2012)

IACS Unified Interpretations (UI) ~~for~~ on the application of SOLAS regulations to conversions of Single-Hull Oil Tankers to Double-Hull Oil Tankers or Bulk Carriers ~~Single Hull Tanker to Double Hull Tanker or Bulk Carrier/Ore Carrier~~

Reference table of the clarification of the applicability of SOLAS regulations

No.	Reg.	Title/Content	Note
1	II-1/1.3	Alterations and modifications of a major character	As amended by MSC.216(82)
2	II-1/3.2, 2 & 3.2, 4	Protective coatings of dedicated seawater ballast tanks in all types of ships and double-side skin spaces of bulk carriers	As amended by MSC.216(82)
3	II-1/3-6	Access to and within spaces in, and forward of, the cargo area of oil tankers and bulk carriers	As amended by MSC.194(80)
4	II-1/3-8	Towing and Mooring Equipment	As amended by MSC.194(80)
5	II-1/Part B & Part B-1	~~Part B:~~ Subdivision and stability ~~Part B-1: Stability~~	As amended by MSC.216(82)
6	II-2/1.3	Repairs, alterations, modifications and outfitting	
7	III/1.4.2	Alterations and modifications of a major character	
8	III/31.1.8	Survival craft and rescue boats ~~Free fall lifeboats~~	
9	V/22	Navigation bridge visibility	
10	XII/4	Damage stability requirements applicable to bulk carriers	
~~11~~	XII/5.1 & 5.2	Structural strength of bulk carriers	
~~12~~	XII/6.1	Structural and other requirements for bulk carriers	
~~13~~	XII/6.2	Structural and other requirements for bulk carriers	
~~14~~	XII/6.3	Structural and other requirements for bulk carriers	As amended by MSC.216(82) Annex 1
~~15~~	XII/6.4	Structural and other requirements for bulk carriers	As amended by MSC.216(82) Annex 1
~~16~~	XII/7.1	Survey and maintenance of bulk carrier	
~~17~~	XII/7.2	Survey and maintenance of bulk carrier	
~~18~~	XII/8	Information on compliance with requirements for bulk carriers	
~~19~~	XII/9	Requirements for bulk carriers not being capable of complying with regulation 4.3 due to the design configuration of their cargo holds	
~~20~~	XII/10	Solid bulk cargo density declaration	
~~21~~	XII/11	Loading instrument	
~~22~~	XII/12	Hold, ballast and dry space water ingress alarms	
~~23~~	XII/13	Availability of pumping systems	
~~24~~	XII/14	Restrictions from sailing with any hold empty	

Note:

SC 226 (cont)

1. This UI is to be applied by IACS ~~Members and Associates~~Societies when acting as recognized organizations, authorized by flag State Administrations to act on their behalf, unless otherwise advised, from ~~1 January 2009~~1 January 2014.

SC 226 (cont)

SC226.1 Alterations and modifications of a major character SOLAS Chapter II-1 Reg. 1.3 (as amended by MSC.216(82))

SOLAS Chapter II-1, Reg. 1 'Application':

"3 All ships which undergo repairs, alterations, modifications and outfitting related thereto shall continue to comply with at least the requirements previously applicable to these ships. Such ships, if constructed before the date on which any relevant amendments enter into force, shall, as a rule, comply with the requirements for ships constructed on or after that date to at least the same extent as they did before undergoing such repairs, alterations, modifications or outfitting. Repairs, alterations and modifications of a major character and outfitting related thereto shall meet the requirements for ships constructed on or after the date on which any relevant amendments enter into force, in so far as the Administration deems reasonable and practicable."

Interpretation

1. The date on which a conversion occurs for the purposes of determining the applicability of requirements for ships constructed on or after the date on which any relevant amendments enters into force is to be:

   .1 the date on which the contract is placed for the conversion; or

   .2 in the absence of a contract, the date on which the work identifiable with the specific conversion begins; or

   .3 the completion date of the conversion, if that occurs more than three years after the date specified in subparagraph .1 above or 30 months after the date specified in subparagraph .2 above, either as applicable.

2 As for paragraph 1 above, the following applies:

   .1 Where the completion date of the conversion has been subject to delay beyond the period referred to in paragraph 1.3 above due to unforeseen circumstances beyond the control of the builder and the owner, the date on which contract is placed for the conversion or, if applicable, the date on which the work identifiable with the specific conversion begins may be accepted by the Administration in lieu of the completion date of the conversion. The treatment of such ships is to be considered by the Administration on a case-by-case basis, bearing in mind the particular circumstances.

   .2 It is important that ships accepted by the Administration under the provisions of subparagraph .1 above are also to be accepted as such by port States. In order to ensure this, the following practice is recommended to Administrations when considering an application for such a ship:

      .1 the Administration should thoroughly consider applications on a case-by-case basis, bearing in mind the particular circumstances. In doing so in the case of a ship converted in a foreign country, the Administration may require a formal report from the authorities of the country in which the ship was converted, stating that the delay was due to unforeseen circumstances beyond the control of the builder and the owner;

SC 226 (cont)

.2 when a ship is accepted by the Administration under the provisions of subparagraph .1 above, information on the conversion date annotated on the relevant certificates is to be footnoted to indicate that the ship is accepted by the Administration under the unforeseen delay in completion of the conversion provisions of this interpretation; and

.3 the Administration should report to the Organization on the identity of the ship and the grounds on which the ship has been accepted under the unforeseen delay in the completion of the conversion provisions of this interpretation.

~~The date on which such a modification occurs for purposes of determining the applicability of requirements for ships constructed on or after the date on which any relevant amendments enter into force shall be:~~

~~– the date on which the contract is placed for the conversion; or~~

~~– in the absence of a contract, the date on which the work identifiable with the specific conversion begins.~~

For conversions of single-hull oil tankers to double-hull oil tankers or bulk carriers, the following is to apply:

.1 Conversions of single-hull oil tankers to double-hull oil tankers or bulk carriers is to be regarded as modifications of a major character for the purposes of SOLAS chapter II-1.

.2 Repairs, alterations and modifications of a major character include:

.1 Substantial alteration of the dimensions of a ship, for example lengthening of a ship by adding a new midbody. The new midbody is to comply with SOLAS chapter II-1.

.2 A change of ship type, for example an oil tanker converted to a bulk carrier. Any structure, machinery and systems that are added or modified is to comply with SOLAS chapter II-1, taking into account the interpretation of SOLAS chapter II-1 regulations as contained herein.

~~• For Single-Hull Tanker to Double-Hull Tanker or Single-Hull Tanker to Bulk Carrier/Ore Carrier~~

~~i.e.~~

~~1 Conversions of single-hull tankers to double-hull tankers are regarded as modifications of a major character for the purposes of SOLAS chapter II-1.~~

~~2 Repairs, alterations and modifications of a major character include:~~

~~.1 Substantial alteration of the dimensions of a ship, for example:~~

~~Lengthening of a ship by adding a new midbody. The new midbody shall comply with SOLAS chapter II-1.~~

~~.2 A change of ship type, for example:~~

SC 226 (cont)

~~A tanker converted to a bulk carrier. Any structure, machinery and systems that are added or modified shall comply with SOLAS chapter II-1 taking into account the interpretation Reg. 3-2, 2 and Reg. 3-2, 4.~~

SC 226 (cont)

SC226.2 Protective coatings of dedicated seawater ballast tanks in all types of ships and double-side skin spaces of bulk carriers SOLAS Chapter II-1 Reg. 3-2, 2 and Reg. 3-2, 4 (as amended by MSC.216(82))

SOLAS Chapter II-1, Reg. 3-2:

"2 All dedicated seawater ballast tanks arranged in ships and double-side skin spaces arranged in bulk carriers of 150 m in length and upwards shall be coated during construction in accordance with the Performance standard for protective coatings for dedicated seawater ballast tanks in all types of ships and double-side skin spaces of bulk carriers, adopted by the Maritime Safety Committee by resolution MSC.215(82), as may be amended by the Organization, provided that such amendments are adopted, brought into force and take effect in accordance with the provisions of article VIII of the present Convention concerning the amendment procedures applicable to the Annex other than chapter I."

and

"4 Maintenance of the protective coating system shall be included in the overall ship's maintenance scheme. The effectiveness of the protective coating system shall be verified during the life of a ship by the Administration or an organization recognized by the Administration, based on the guidelines developed by the Organization."*

Interpretation

1. For single-hull oil tanker conversion into double-hull oil tanker, SOLAS regulation II-1/3-2 as adopted by resolution MSC.216(82) is to apply to dedicated water ballast tanks if constructed with all structural members being entirely new. If converting existing spaces into water ballast tanks with part of the existing structural members remaining in place, revised SOLAS regulation II-1/3-2 (MSC.216(82)) need not be applied. However, dedicated sea water ballast tanks are to have an efficient corrosion prevention system such as hard protective coatings or equivalent and be of light colour.

2. For single-hull oil tanker conversion into bulk carrier, SOLAS regulation II-1/3-2 as adopted by resolution MSC.216(82) is to apply to dedicated water ballast tanks and double-side skin spaces of bulk carriers if constructed with all structural members being entirely new. If converting existing spaces into dedicated water ballast tanks or double-side skin space of bulk carriers with part of the existing structural members remaining in place, revised SOLAS regulation II-1/3-2 (MSC.216(82)) need not be applied. However, dedicated sea water ballast tanks are to have an efficient corrosion prevention system such as hard protective coatings or equivalent and be of light colour.

~~• For Single-Hull Tanker to Double-Hull Tanker~~

~~SOLAS II-1/3-2 (MSC.216(82)) only applies to dedicated water ballast tanks if constructed with all structural members being entirely new. If converting existing spaces into water ballast tanks with part of the existing structural members remaining in place, revised SOLAS II-1/3-2 (MSC.216(82)) need not be applied.~~

~~• For Single-Hull Tanker to Bulk Carrier/Ore Carrier~~

SC 226 (cont)

~~SOLAS II-1/3-2 (MSC.216(82)) only applies to dedicated water ballast tanks and double-side skin space of bulk carriers if constructed with all structural members being entirely new. If converting existing spaces into dedicated water ballast tanks or double-side skin space of Bulk Carrier with part of the existing structural members remains in place, revised SOLAS II-1/3-2 (MSC.216(82)) need not be applied.~~

SC 226 (cont)

SC226.3 Access to and within spaces in, and forward of, the cargo area of oil tankers and bulk carriers
SOLAS Chapter II-1 Reg. 3-6 (as amended by MSC.194(80))

Regulation texts are not inserted here.

Interpretation

1. For single-hull oil tanker conversion into double-hull oil tanker

1.1 Permanent means of access contained in table 1 of the Technical provisions for means of access for inspections (resolution MSC.158(78)) need not apply. However, if, in the course of conversion, substantial new structures are added, these new structures are to comply with the regulation.

1.2 The term "substantial new structures" means hull structures that are entirely renewed or augmented by new double bottom and/or double-side construction (e.g., replacing the entire structure within cargo area or adding a new double bottom and/or double-side section to the existing cargo area).

1.3 Additionally, an approved Ship Structure Access Manual is to be provided.

2. For single-hull oil tanker conversion into bulk carrier

2.1 Permanent means of access contained in table 2 of the Technical provisions for means of access for inspections (resolution MSC.158(78)) need not apply. However, if, in the course of conversion, substantial new structures are added, these new structures are to comply with the regulation.

2.2 The term "substantial new structures" means hull structures that are entirely renewed or augmented by new double bottom and/or double-side skin construction (e.g., replacing the entire structure within cargo area or adding a new double bottom and/or double-side section to the existing cargo area).

2.3 Additionally, an approved Ship Structure Access Manual is to be provided.

~~• For Single-Hull Tanker to Double-Hull Tanker~~

~~Permanent means of access contained in table 1 of the Technical provisions for means of access for inspections (resolution MSC.158(78)) need not apply. However, if, in the course of conversion, substantial new structures are added, these new structures shall comply with the regulation.~~

~~The term "substantial new structures" means hull structures that are entirely renewed or augmented by new double bottom and/or double side construction (e.g., replacing the entire structure within cargo area or adding a new double bottom and/or double side section to the existing cargo area).~~

~~Additionally, an approved access manual shall be provided.~~

~~• For Single-Hull Tanker to Bulk Carrier/Ore Carrier~~

~~Permanent means of access contained in table 2 of the Technical provisions for means of access for inspections (resolution MSC.158(78)) need not apply. However, if, in the course of~~

SC 226 (cont)

~~conversion, substantial new structures are added, these new structures shall comply with the regulation.~~

~~The term "substantial new structures" means hull structures that are entirely renewed or augmented by new double bottom and/or double-side skin construction (e.g., replacing the entire structure within cargo area or adding a new double bottom and/or double-side section to the existing cargo area).~~

~~Additionally, an approved access manual shall be provided.~~

SC 226 (cont)

SC226.4 Towing and Mooring Equipment
SOLAS Chapter II-1 Reg. 3-8 (as amended by MSC.194(80))

Regulation texts are not inserted here.

Interpretation

For single-hull oil tanker conversion into double-hull oil tanker or bulk carrier

This regulation is to be applied when equipment and fittings for mooring/towing are replaced, modified or the safe working load of the existing equipment and fittings is known. Where the latter cannot be ascertained, alternative compliance with SOLAS regulation II-1/3-8 is to be sought (e.g., the equipment is to be replaced, tested or modified).

- ~~For Single-Hull Tanker to Double-Hull Tanker or Single-Hull Tanker to Bulk Carrier/Ore Carrier~~

~~When existing equipment or fittings are only relocated, this regulation applies only to their supporting structures.~~

~~Except where equipment and fittings for mooring/towing are totally replaced or modified, indication of Safe Work Load and provision of towing and mooring arrangements plan is not required.~~

SC 226 (cont)

SC226.5 ~~Part B: Subdivision and stability; and Part B-1: Stability~~ Subdivision and stability
SOLAS Chapter II-1 Part B and Part B-1 (as amended by MSC.216(82) ~~– to be implemented from 1 January 2009)~~

~~Part~~	~~Reg.~~	~~Title~~	~~Applicable to~~
~~B~~	~~4~~	~~General~~	~~Cargo ships and passenger ships, but shall exclude those cargo ships which are shown to comply with subdivision and damage stability regulations in other instruments developed by the IMO.~~
~~B-1~~	~~5~~	~~Intact stability information~~	~~Cargo ships and passenger ships~~
~~B-1~~	~~5-1~~	~~Stability information to be supplied to the master~~	~~Cargo ships and passenger ships~~
~~B-1~~	~~6~~	~~Required subdivision index *R*~~	~~Cargo ships and passenger ships~~
~~B-1~~	~~7~~	~~Attained subdivision index *A*~~	~~Cargo ships and passenger ships~~
~~B-1~~	~~7-1~~	~~Calculation of the factor p_i~~	~~Cargo ships and passenger ships~~
~~B-1~~	~~7-2~~	~~Calculation of the factor s_i~~	~~Cargo ships and passenger ships~~
~~B-1~~	~~7-3~~	~~Permeability~~	~~Cargo ships and passenger ships~~

Regulation texts are not inserted here.

Interpretation

1. For single-hull oil tanker conversion into double-hull oil tanker

Oil tankers complying with damage stability requirements contained in Annex I to MARPOL 73/78 (except for combination carriers with type B freeboards) may be excluded from the damage stability requirements contained in SOLAS chapter II-1, part B-1.

2. For single-hull oil tanker conversion into bulk carrier

2.1 A bulk carrier which is assigned a B reduced freeboard complying with damage stability requirements contained in regulation 27 of the 1966 Load Line Convention, and resolutions A.320(IX) and A.514(13); or regulation 27 of the 1988 Load Line Protocol, may be excluded from the damage stability requirements contained in SOLAS chapter II-1, part B-1.

2.2 For a bulk carrier which is assigned a B freeboard, SOLAS chapter II-1, Parts B and B-1 are to be applied.

~~• For Single Hull Tanker to Double Hull Tanker~~

~~As Oil Tankers shall comply with MARPOL Annex I Reg. 27 (intact stability) and Reg. 28 (damage stability), SOLAS Part B, B-1 may be excluded.~~

SC 226 (cont)

- ~~For Single-Hull Tanker to Bulk Carrier/Ore Carrier~~

~~For Bulk Carrier/Ore Carrier which is assigned a B reduced freeboard, ICLL 1966 Reg.27 (damage stability) or ICLL Protocol 1988 Reg.27 (damage stability) is applicable. As such, SOLAS II-1 Parts B, B-1 may be excluded.~~

~~For Bulk Carrier/Ore Carrier which is assigned a B freeboard, SOLAS II-1 Part B, B-1 is applicable.~~

SC 226 (cont)

SC226.6 Repairs, alterations, modifications and outfitting SOLAS Chapter II-2 Reg. 1.3

SOLAS Chapter II-2, Reg. 1.3 'Repairs, alterations, modifications and outfitting':

"3.1 All ships which undergo repairs, alterations, modifications and outfitting related thereto shall continue to comply with at least the requirements previously applicable to these ships. Such ships, if constructed before 1 July 2002, shall, as a rule, comply with the requirements for ships constructed on or after that date to at least the same extent as they did before undergoing such repairs, alterations, modifications or outfitting.

3.2 Repairs, alterations and modifications which substantially alter the dimensions of a ship or the passenger accommodation spaces, or substantially increase a ship's service life and outfitting related thereto shall meet the requirements for ships constructed on or after 1 July 2002 in so far as the Administration deems reasonable and practicable."

Interpretation

~~The date on which a such a modification occurs for purposes of determining the applicability of requirements for ships constructed on or after the date on which any relevant amendments enter into force shall be:~~

- ~~the date on which the contract is placed for the conversion; or~~
- ~~in the absence of a contract, the date on which the work identifiable with the specific conversion begins.~~

For single-hull oil tanker conversion into double-hull oil tanker or bulk carrier, new and converted parts are to comply with the latest applicable requirements.

~~• For Single-Hull Tanker to Double-Hull Tanker~~

~~New and converted parts shall comply with the latest applicable requirements.~~

~~• For Single-Hull Tanker to Bulk Carrier/Ore Carrier~~

~~New and converted parts shall comply with the latest applicable requirements.~~

SC 226 (cont)

SC226.7 Alterations and modifications of a major character SOLAS Chapter III Reg. 1.4.2

SOLAS Chapter III, Reg. 1 'Application':

"4 For ships constructed before 1 July 1998, the Administration shall:

.1 .....; and

.2 ensure that when life-saving appliances or arrangements on such ships are replaced or such ships undergo repairs, alterations or modifications of a major character which involve replacement of, or any addition to, their existing life-saving appliances or arrangements, such life-saving appliances or arrangements, in so far as is reasonable and practicable, comply with the requirements of this chapter. However, if a survival craft other than an inflatable liferaft is replaced without replacing its launching appliance, or vice versa, the survival craft or launching appliance may be of the same type as that replaced."

Interpretation

~~The date on which a such a modification occurs for purposes of determining the applicability of requirements for ships constructed on or after the date on which any relevant amendments enter into force shall be:~~

- ~~the date on which the contract is placed for the conversion; or~~
- ~~in the absence of a contract, the date on which the work identifiable with the specific conversion begins.~~

For single-hull oil tanker conversion into double-hull oil tanker or bulk carrier, this to be considered as an alteration or modification of a major character.

- ~~For Single-Hull Tanker to Double-Hull Tanker~~

~~This shall be considered as a major conversion.~~

- ~~For Single-Hull Tanker to Bulk Carrier/Ore Carrier~~

~~This shall be considered as a major conversion.~~

SC 226 (cont)

SC226.8 Survival craft and rescue boats ~~Free-fall lifeboats~~
SOLAS Chapter III Reg. 31.1.8

SOLAS Chapter III, Reg. 31 'Survival craft and rescue boats':

"1.2 In lieu of meeting the requirements of paragraph 1.1, cargo ships may carry:

.1 one or more free-fall lifeboats, complying with the requirements of section 4.7 of the Code, capable of being free-fall launched over the stern of the ship of such aggregate capacity as will accommodate the total number of persons on board; and

.2 in addition, one or more inflatable or rigid liferafts complying with the requirements of section 4.2 or 4.3 of the Code, on each side of the ship, of such aggregate capacity as will accommodate the total number of persons on board. The liferafts on at least one side of the ship shall be served by launching appliances."

and

"1.8 Notwithstanding the requirements of paragraph 1.1, bulk carriers as defined in regulation IX/1.6 constructed on or after 1 July 2006 shall comply with the requirements of paragraph 1.2."

Interpretation

1. For single-hull oil tanker conversion into double-hull oil tanker, this regulation is not relevant.

2. For single-hull oil tanker conversion into bulk carrier, SOLAS regulation III/31.1.8 is to be met as for new ships, except where the space available for fitting and/or launching a free-fall lifeboat in accordance with regulation III/31.1.2.1 is not adequate, in which case the Administration is to be contacted to determine whether or not existing arrangement may be accepted.

~~• For Single-Hull Tanker to Double-Hull Tanker~~

~~Not relevant.~~

~~• For Single-Hull Tanker to Bulk Carrier/Ore Carrier~~

~~Not applicable.~~

SC 226 (cont)

SC226.9 Navigation bridge visibility SOLAS Chapter V Reg. 22

Regulation text is not inserted here.

Interpretation

For single-hull oil tanker conversion into double-hull oil tanker or bulk carrier, the level of visibility possessed by the ship prior to the conversion at the ballast loading condition is to be maintained after the conversion. Where a conversion involves the modification of structural arrangements used to establish minimum bridge visibility, the provisions of SOLAS regulation V/22 is to apply.

~~For Single-Hull Tanker to Double-Hull Tanker~~

~~In ballast loading condition, the visibility standard applicable to the ship prior to conversion is acceptable as equivalent to the ballast loading condition after the conversion. Visibility forward needs to comply with if any changes are made to the fore end structural arrangement. This need not only be related to the fitting of a full forecastle, but could also be affected by aspects such as increasing the sheer and/or step in the upper deck.~~

~~• For Single-Hull Tanker to Bulk Carrier/Ore Carrier~~

~~In ballast loading condition, the visibility standard applicable to the ship prior to conversion is acceptable as equivalent to the ballast loading condition after the conversion. Visibility forward needs to comply with if any changes are made to the fore end structural arrangement. This need not only be related to the fitting of a full forecastle, but could also be affected by aspects such as increasing the sheer and/or step in the upper deck.~~

SC 226 (cont)

SC226.10 Damage stability requirements applicable to bulk carriers

SOLAS regulation XII/4, structural strength of bulk carriers SOLAS regulation XII/5.1 and 5.2, structural and other requirements for bulk carriers SOLAS regulation XII/6.1, XII/6.2, XII/6.3 (MSC.216(82) Annex 1) and XII/6.4 (MSC.216(82) Annex 1), survey and maintenance of bulk carriers SOLAS regulation XII/7.1 and XII/7.2, information on compliance with requirements for bulk carriers SOLAS regulation XII/8, Requirements for bulk carriers not being capable of complying with regulation 4.3 due to the design configuration of their cargo holds SOLAS regulation XII/9, Solid bulk cargo density declaration SOLAS regulation XII/10, Loading instrument SOLAS regulation XII/11, Hold, ballast and dry space water ingress alarms SOLAS regulation XII/12, Availability of pumping systems SOLAS regulation XII/13, Restrictions from sailing with any hold empty SOLAS regulation XII/14

Regulation texts are not inserted here.

~~*"2 Bulk carriers of 150 m in length and upwards of double-side skin construction in which any part of longitudinal bulkhead is located within B/5 or 11.5 m, whichever is less, inboard from the ship's side at right angle to the centreline at the assigned Summer Load Line, designed to carry solid bulk cargoes having a density of 1,000 kg/m^3 and above, constructed on or after 1 July 2006, shall, when loaded to the Summer Load Line, be able to withstand flooding of any one cargo hold in all loading conditions and remain afloat in a satisfactory condition of equilibrium, as specified in paragraph 4."*~~

Interpretation

1. For single-hull oil tanker conversion into double-hull oil tanker, these regulations are not relevant.

2. For single-hull oil tanker conversion into bulk carrier, the provisions of chapter XII applicable for ships constructed on or after the date on which conversion occurs, are to be applied as for a new ship to the entire bulk carrier, i.e. all new and existing parts and spaces, as indicated in the table below.

Table of application of the Regulations of SOLAS Chapter XII to the conversions of Single Hull Tankers to Bulk Carriers/Ore Carriers

SC 226 (cont)

Regulation	Applicability	Note
4.1	Apply	
4.2	Apply, based on the Unified interpretations of SOLAS regulations XII/4.2 and XII/5.2 (MSC.1/Circ.1178).	
4.3	NA	
4.4	NA	This regulation is referred to within regulations 4.1 and 4.2
4.5	NA	
4.6	Apply	
4.7	Apply	
5.1	Apply	
5.2	Apply, based on the Unified interpretations of SOLAS regulations XII/4.2 and XII/5.2 (MSC.1/Circ.1178).	
6.1	NA	
6.2	Apply	
6.3	Apply	
6.4	Apply	
7.1	NA. However, SOLAS regulation XI-1/2 is applicable.	
7.2	Apply	
8.1	Apply	
8.2	NA	
8.3	NA	
9	NA	
10.1	Apply	
10.2	NA	
11.1	Apply	
11.2	NA	
11.3	Apply	
12.1	Apply	
12.2	Apply	
12.3	NA	
13.1	Apply	
13.2	NA	
14	NA	

~~• For Single Hull Tanker to Double Hull Tanker~~

~~Not relevant.~~

~~• For Single Hull Tanker to Bulk Carrier/Ore Carrier~~

~~When the breadth of wing tanks is less than B/5 or 11.5m, whichever is less, this requirement applies to the relevant cargo hold(s) in way of that wing tank.~~

SC 226 (cont)

~~SC226.11 Structural strength of bulk carriers SOLAS regulation XII/5.1 and 5.2~~

~~*"1 Bulk carriers of 150 m in length and upwards of single-side skin construction, designed to carry solid bulk cargoes having a density of 1,000 kg/m^3 and above constructed on or after 1 July 1999, shall have sufficient strength to withstand flooding of any one cargo hold to the water level outside the ship in that flooded condition in all loading and ballast conditions, taking also into account dynamic effects resulting from the presence of water in the hold, and taking into account the recommendations adopted by the Organization.*~~

~~*2 Bulk carriers of 150 m in length and upwards of double-side skin construction, in which any part of longitudinal bulkhead is located within B/5 or 11.5 m, whichever is less, inboard from the ship's side at right angle to the centreline at the assigned Summer Load Line, designed to carry bulk cargoes having a density of 1,000 kg/m^3 and above, constructed on or after 1 July 2006, shall comply with the structural strength provisions of paragraph 1."*~~

~~Interpretation~~

~~• For Single Hull Tanker to Double Hull Tanker~~

~~Not relevant.~~

~~• For Single Hull Tanker to Bulk Carrier/Ore Carrier~~

~~When the breadth of wing tanks is less than B/5 or 11.5m, whichever is less, this requirement applies to the relevant cargo hold(s) in way of that wing tank.~~

SC 226 (cont)

~~SC226.12 Structural and other requirements for bulk carriers SOLAS regulation XII/6.1~~

~~*"1 Bulk carriers of 150 m in length and upwards of single-side skin construction, carrying solid bulk cargoes having a density of 1,780 kg/m^3 and above, constructed before 1 July 1999, shall comply with the following requirements in accordance with the implementation schedule specified in regulation 3:"*~~

~~Interpretation~~

~~• For Single-Hull Tanker to Double-Hull Tanker~~

~~Not relevant.~~

~~• For Single-Hull Tanker to Bulk Carrier/Ore Carrier~~

~~This regulation is not applicable.~~

SC 226 (cont)

~~SC226.13 Structural and other requirements for bulk carriers~~
~~SOLAS regulation XII/6.2~~

~~*"2 Bulk carriers of 150 m in length and upwards constructed on or after 1 July 2006, shall comply in all areas with double-side skin construction with the following requirements:*~~

~~*.1 Primary stiffening structures of the double-side skin shall not be placed inside the cargo hold space.*~~

~~*.2 Subject to the provisions below, the distance between the outer shell and the inner shell at any transverse section shall not be less than 1,000 mm measured perpendicular to the side shell. The double-side skin construction shall be such as to allow access for inspection as provided in regulation II-1/3-6 and the Technical Provisions referring thereto.*~~

~~*.1 The clearances below need not be maintained in way of cross ties, upper and lower end brackets of transverse framing or end brackets of longitudinal framing.*~~

~~*.2 The minimum width of the clear passage through the double-side skin space in way of obstructions such as piping or vertical ladders shall not be less than 600 mm.*~~

~~*.3 Where the inner and/or outer skins are transversely framed, the minimum clearance between the inner surfaces of the frames shall not be less than 600 mm.*~~

~~*.4 Where the inner and outer skins are longitudinally framed, the minimum clearance between the inner surfaces of the frames shall not be less than 800 mm. Outside the parallel part of the cargo hold length, this clearance may be reduced where necessitated by the structural configuration, but, shall in no case be less than 600 mm.*~~

~~*.5 The minimum clearance referred to above shall be the shortest distance measured between assumed lines connecting the inner surfaces of the frames on the inner and outer skins."*~~

~~Interpretation~~

~~• For Single Hull Tanker to Double Hull Tanker~~

~~Not relevant.~~

~~• For Single Hull Tanker to Bulk Carrier/Ore Carrier~~

~~This regulation applies. For Permanent Means of Access, the requirements contained in table 2 of the Technical provisions for means of access for inspections (resolution MSC.158(78)) shall not apply to tankers converting from single hull to double hull. However, if, in the course of conversion, substantial new structures are added, these new structures shall comply with the regulation. The term "substantial new structures" means hull structures that are entirely renewed or augmented by new double bottom and/or double side construction (e.g., replacing the entire structure within cargo area or adding a new double bottom and/or double side section to the existing cargo area). Additionally, an approved access manual shall be provided.~~

SC 226 (cont)

~~SC226.14 Structural and other requirements for bulk carriers~~
~~SOLAS regulation XII/6.3 (MSC.216(82) Annex 1)~~

~~*"3 The double-side skin spaces, with the exception of top-side wing tanks, if fitted, shall not be used for the carriage of cargo."*~~

~~Interpretation~~

- ~~For Single-Hull Tanker to Double-Hull Tanker~~

~~Not relevant.~~

- ~~For Single-Hull Tanker to Bulk Carrier/Ore Carrier~~

~~This regulation applies.~~

SC 226 (cont)

~~SC226.15 Structural and other requirements for bulk carriers~~
~~SOLAS regulation XII/6.4 (MSC.216(82) Annex 1)~~

~~*"4 In bulk carriers of 150 m in length and upwards, carrying solid bulk cargoes having a density of 1,000 kg/m^3 and above, constructed on or after 1 July 2006:*~~

~~*.1 the structure of cargo holds shall be such that all contemplated cargoes can be loaded and discharged by standard loading/discharge equipment and procedures without damage which may compromise the safety of the structure;*~~

~~*.2 effective continuity between the side shell structure and the rest of the hull structure shall be assured; and*~~

~~*.3 the structure of cargo areas shall be such that single failure of one stiffening structural member will not lead to immediate consequential failure of other structural items potentially leading to the collapse of the entire stiffened panels."*~~

~~Interpretation~~

~~• For Single Hull Tanker to Double Hull Tanker~~

~~Not relevant.~~

~~• For Single Hull Tanker to Bulk Carrier/Ore Carrier~~

~~The newly constructed parts of converted bulk carriers of 150 m in length and upwards, carrying solid bulk cargoes having a density of 1,000 kg/m^3 and above, constructed on or after 1 July 2006 shall comply.~~

SC 226 (cont)

~~SC226.16 Survey and maintenance of bulk carriers~~
~~SOLAS regulation XII/7.1~~

~~*"1 Bulk carriers of 150 m in length and upwards of single-side skin construction, constructed before 1 July 1999, of 10 years of age and over, shall not carry solid bulk cargoes having a density of 1,780 kg/m^3 and above unless they have satisfactorily undergone either:*~~

~~*.1 a periodical survey, in accordance with the enhanced programme of inspections during surveys required by regulation XI-1/2; or*~~

~~*.2 a survey of all cargo holds to the same extent as required for periodical surveys in the enhanced programme of inspections during surveys required by regulation XI-1/2."*~~

~~Interpretation~~

~~• For Single Hull Tanker to Double Hull Tanker~~

~~Not relevant.~~

~~• For Single Hull Tanker to Bulk Carrier/Ore Carrier~~

~~This regulation is not applicable.~~

SC 226 (cont)

~~SC226.17 Survey and maintenance of bulk carriers~~
~~SOLAS regulation XII/7.2~~

~~*"2 Bulk carriers shall comply with the maintenance requirements provided in regulation II-1/3-1 and the Standards for owners' inspection and maintenance of bulk carrier hatch covers, adopted by the Organization by resolution MSC.169(79), as may be amended by the Organization, provided that such amendments are adopted, brought into force and take effect in accordance with the provisions of article VIII of the present Convention concerning the amendment procedures applicable to the Annex other than chapter I."*~~

~~Interpretation~~

~~• For Single Hull Tanker to Double Hull Tanker~~

~~Not relevant.~~

~~• For Single Hull Tanker to Bulk Carrier/Ore Carrier~~

~~This regulation shall be applied.~~

SC 226 (cont)

~~SC226.18 Information on compliance with requirements for bulk carriers SOLAS regulation XII/8~~

~~*"1 The booklet required by regulation VI/7.2 shall be endorsed by the Administration, or on its behalf, to indicate that regulations 4, 5, 6 and 7, as appropriate, are complied with.*~~

~~*2 Any restrictions imposed on the carriage of solid bulk cargoes having a density of 1,780 kg/m^3 and above in accordance with the requirements of regulations 6 and 14 shall be identified and recorded in the booklet referred to in paragraph 1.*~~

~~*3 A bulk carrier to which paragraph 2 applies shall be permanently marked on the side shell at midships, port and starboard, with a solid equilateral triangle having sides of 500 mm and its apex 300 mm below the deck line, and painted a contrasting colour to that of the hull."*~~

~~Interpretation~~

- ~~For Single Hull Tanker to Double Hull Tanker~~

~~Not relevant.~~

- ~~For Single Hull Tanker to Bulk Carrier/Ore Carrier~~

~~This regulation shall be applied.~~

SC 226 (cont)

~~SC226.19 Requirements for bulk carriers not being capable of complying with regulation 4.3 due to the design configuration of their cargo holds~~

~~SOLAS regulation XII/9~~

~~*"For bulk carriers constructed before 1 July 1999 being within the application limits of regulation 4.3, which have been constructed with an insufficient number of transverse watertight bulkheads to satisfy that regulation, the Administration may allow relaxation from the application of regulations 4.3 and 6, on condition that they shall comply with the following requirements:*~~

~~*.1 for the foremost cargo hold, the inspections prescribed for the annual survey in the enhanced programme of inspections during surveys required by regulation XI-1/2 shall be replaced by the inspections prescribed therein for the intermediate survey of cargo holds;*~~

~~*.2 they are provided with bilge well high water level alarms in all cargo holds, or in cargo conveyor tunnels, as appropriate, giving an audible and visual alarm on the navigation bridge, as approved by the Administration or an organization recognized by it in accordance with the provisions of regulation XI-1/1; and*~~

~~*.3 they are provided with detailed information on specific cargo hold flooding scenarios. This information shall be accompanied by detailed instructions on evacuation preparedness under the provisions of section 8 of the International Safety Management (ISM) Code and be used as the basis for crew training and drills."*~~

~~Interpretation~~

~~• For Single-Hull Tanker to Double-Hull Tanker~~

~~Not relevant.~~

~~• For Single-Hull Tanker to Bulk Carrier/Ore Carrier~~

~~This regulation is not applicable.~~

SC 226 (cont)

~~SC226.20 Solid bulk cargo density declaration~~
~~SOLAS regulation XII/10~~

~~*"1 Prior to loading bulk cargo on bulk carriers of 150 m in length and upwards, the shipper shall declare the density of the cargo, in addition to providing the cargo information required by regulation VI/2.*~~

~~*2 For bulk carriers to which regulation 6 applies, unless such bulk carriers comply with all relevant requirements of this chapter applicable to the carriage of solid bulk cargoes having a density of 1,780 kg/m^3 and above, any cargo declared to have a density within the range 1,250 kg/m^3 to 1,780 kg/m^3 shall have its density verified by an accredited testing organization."*~~

~~Interpretation~~

~~• For Single-Hull Tanker to Double-Hull Tanker~~

~~Not relevant.~~

~~• For Single-Hull Tanker to Bulk Carrier/Ore Carrier~~

~~This regulation shall be applied.~~

SC 226 (cont)

SC226.21 Loading instrument
SOLAS regulation XII/11

"Loading instrument
(Unless provided otherwise, this regulation applies to bulk carriers regardless of their date of construction)

1 Bulk carriers of 150 m in length and upwards shall be fitted with a loading instrument capable of providing information on hull girder shear forces and bending moments, taking into account the recommendation adopted by the Organization.

2 Bulk carriers of 150 m in length and upwards constructed before 1 July 1999 shall comply with the requirements of paragraph 1 not later than the date of the first intermediate or periodical survey of the ship to be carried out after 1 July 1999.

3 Bulk carriers of less than 150 m in length constructed on or after 1 July 2006 shall be fitted with a loading instrument capable of providing information on the ship's stability in the intact condition. The computer software shall be approved for stability calculations by the Administration and shall be provided with standard conditions for testing purposes relating to the approved stability information."

Interpretation

- For Single Hull Tanker to Double Hull Tanker

Not relevant.

- For Single Hull Tanker to Bulk Carrier/Ore Carrier

This regulation shall be applied.

SC 226 (cont)

~~SC226.22 Hold, ballast and dry space water ingress alarms~~
~~SOLAS regulation XII/12~~

~~*"Hold, ballast and dry space water ingress alarms*~~
~~*(This regulation applies to bulk carriers regardless of their date of construction)*~~

~~*1 Bulk carriers shall be fitted with water level detectors:*~~

~~*.1 in each cargo hold, giving audible and visual alarms, one when the water level above the inner bottom in any hold reaches a height of 0.5 m and another at a height not less than 15% of the depth of the cargo hold but not more than 2 m. On bulk carriers to which regulation 9.2 applies, detectors with only the latter alarm need be installed. The water level detectors shall be fitted in the aft end of the cargo holds. For cargo holds which are used for water ballast, an alarm overriding device may be installed. The visual alarms shall clearly discriminate between the two different water levels detected in each hold;*~~

~~*.2 in any ballast tank forward of the collision bulkhead required by regulation II-1/12, giving an audible and visual alarm when the liquid in the tank reaches a level not exceeding 10% of the tank capacity. An alarm overriding device may be installed to be activated when the tank is in use; and*~~

~~*.3 in any dry or void space other than a chain cable locker, any part of which extends forward of the foremost cargo hold, giving an audible and visual alarm at a water level of 0.1 m above the deck. Such alarms need not be provided in enclosed spaces the volume of which does not exceed 0.1% of the ship's maximum displacement volume.*~~

~~*2 The audible and visual alarms specified in paragraph 1 shall be located on the navigation bridge.*~~

~~*3 Bulk carriers constructed before 1 July 2004 shall comply with the requirements of this regulation not later than the date of the annual, intermediate or renewal survey of the ship to be carried out after 1 July 2004, whichever comes first."*~~

~~Interpretation~~

~~• For Single Hull Tanker to Double Hull Tanker~~

~~Not relevant.~~

~~• For Single Hull Tanker to Bulk Carrier/Ore Carrier~~

~~This regulation shall be applied.~~

SC 226 (cont)

~~SC226.23 Availability of pumping systems~~
~~SOLAS regulation XII/13~~

~~"*Availability of pumping systems*~~
~~*(This regulation applies to bulk carriers regardless of their date of construction)*~~

~~*1 On bulk carriers, the means for draining and pumping ballast tanks forward of the collision bulkhead and bilges of dry spaces any part of which extends forward of the foremost cargo hold shall be capable of being brought into operation from a readily accessible enclosed space, the location of which is accessible from the navigation bridge or propulsion machinery control position without traversing exposed freeboard or superstructure decks. Where pipes serving such tanks or bilges pierce the collision bulkhead, valve operation by means of remotely operated actuators may be accepted, as an alternative to the valve control specified in regulation II-1/12, provided that the location of such valve controls complies with this regulation.*~~

~~*2 Bulk carriers constructed before 1 July 2004 shall comply with the requirements of this regulation not later than the date of the first intermediate or renewal survey of the ship to be carried out after 1 July 2004, but, in no case, later than 1 July 2007."*~~

~~Interpretation~~

- ~~For Single-Hull Tanker to Double-Hull Tanker~~

~~Not relevant.~~

- ~~For Single-Hull Tanker to Bulk Carrier/Ore Carrier~~

~~This regulation shall be applied.~~

SC 226 (cont)

~~SC226.24 Restrictions from sailing with any hold empty~~
~~SOLAS regulation XII/14~~

~~*"Bulk carriers of 150 m in length and upwards of single-side skin construction, carrying cargoes having a density of 1,780 kg/m^3 and above, if not meeting the requirements for withstanding flooding of any one cargo hold as specified in regulation 5.1 and the Standards and criteria for side structures of bulk carriers of single-side skin construction, adopted by the Organization by resolution MSC.168(79), as may be amended by the Organization, provided that such amendments are adopted, brought into force and take effect in accordance with the provisions of article VIII of the present Convention concerning the amendment procedures applicable to the Annex other than chapter I, shall not sail with any hold loaded to less than 10% of the hold's maximum allowable cargo weight when in the full load condition, after reaching 10 years of age. The applicable full load condition for this regulation is a load equal to or greater than 90% of the ship's deadweight at the relevant assigned freeboard."*~~

~~Interpretation~~

~~• For Single Hull Tanker to Double Hull Tanker~~

~~Not relevant.~~

~~• For Single Hull Tanker to Bulk Carrier/Ore Carrier~~

~~This regulation is not applicable.~~

End of Document

SC 244 Load testing of hooks for primary release of lifeboats and rescue boats

(May 2011) (Rev.1 Nov 2012) (Corr.1 Nov 2015)

(IMO Res. MSC.81(70), Part 2, Ch. 5.3.4)

Regulation

5.3.4 The connection of each release gear which is fixed to the boat should be subjected to a load equal to the weight of the boat with its full complement of persons and equipment (or two times the weight of the boat in the case of single fall systems). There should be no damage to the release gear or its connection to the boat.

Interpretation

1. The above regulation applies only to lifeboats and rescue boats launched by falls.

2. The test does not apply to the secondary means of launching for freefall lifeboats.

3. The test may be carried out onboard the ship or onshore, either at the manufacturer's plant or at the shipyard, by using an appropriate mock-up of the launching arrangements which is equivalent to the launching arrangement installed onboard the ship.

4. The "weight of the boat" to be considered for the load in the case of single fall systems is the "weight of the boat with its full complement of persons and equipment", which according to MSC.81(70), Part 2, Paragraph 5.3.4 shall be multiplied by two.

Notes:

1. This UI is to be uniformly implemented by IACS Societies on ships the keels of which are laid from 1 July 2012.

2. Rev.1 of this UI is to be uniformly implemented by IACS Societies on ships the keels of which are laid from 1 January 2014.

End of Document

SC 249 (Oct 2011) (Corr.1 Apr 2012) (Rev.1 Feb 2013)

Implementation of SOLAS II-1, Regulation 3-5 and MSC.1/Circ.1379

SOLAS Chapter II-1, Regulation 3-5

"From 1 January 2011, for all ships, new installation of materials which contain asbestos shall be prohibited."

MSC.1/Circ.1379

"In the context of this regulation, new installation of materials containing asbestos means any new physical installation on board. Any material purchased prior to 1 January 2011 being kept in the ship's store or in the shipyard for a ship under construction, should not be permitted to be installed after 1 January 2011 as a working part."

Unified Interpretations

SOLAS II-1, Regulation 3-5

1. Verification that *"new installation of materials which contain asbestos"* under SOLAS II-1/3-5 is not made on ships requires the Recognized Organization to review asbestos-free declarations and supporting documentation, for the structure, machinery, electrical installations and equipment covered by the SOLAS Convention, which is to be provided to the Recognized Organization by shipyards, repair yards, and equipment manufacturers taking into account appendix 8 of the 2011 Guidelines for the development of the inventory of hazardous materials (resolution MEPC.197(62)) for:

- new construction (keel laid, or at a similar stage of construction, on or after 1 July 2012);

- conversions (contract date for the conversion or, in the absence of a contract, the date on which the work identifiable with the specific conversion begins) on or after 1 July 2012;

NOTES:

1. This ~~UI~~ Unified Interpretation is to be uniformly implemented by IACS Societies ~~as soon as possible, but~~ not later than 1 July 2012.

2. Revision 1 of this Unified Interpretation is to be uniformly implemented by IACS Societies not later than 1 July 2013.

SC 249 (cont)

MSC.1/Circ.1379

2. The phrase *"new installation of materials containing asbestos"* in MSC.1/Circ.1379:

- means that material used (i.e., repaired, replaced, maintained or added) as a working part of the ship as per Annex 1 which is installed on or after 1 July 2012 is required to be documented with an asbestos-free declaration. The Recognized Organization will, in consultation with the Company's nominated person responsible to control asbestos-containing material onboard as per the Safety Management System in accordance with MSC/Circ.1045, audit this documentation during annual safety construction and safety equipment surveys; and

- does not preclude the stowage of material which contains asbestos onboard (e.g., spare parts existing on board as of 1 July 2012).

3. The phrase *"should not be permitted to be installed after 1 January 2011 as a working part"* in MSC.1/Circ.1379 means that replacement, maintenance or addition of materials used for the structure, machinery, electrical installations and equipment covered by the SOLAS Convention which contain asbestos is prohibited.

SC 249 (cont)

Annex 1

Structure and/or equipment	Component
Propeller shafting	Packing with low pressure hydraulic piping flange Packing with casing Clutch Brake lining Synthetic stern tubes
Diesel engine	Packing with piping flange Lagging material for fuel pipe Lagging material for exhaust pipe Lagging material turbocharger
Turbine engine	Lagging material for casing Packing with flange of piping and valve for steam line, exhaust line and drain line Lagging material for piping and valve of steam line, exhaust line and drain line
Boiler	Insulation in combustion chamber Packing for casing door Lagging material for exhaust pipe Gasket for manhole Gasket for hand hole Gas shield packing for soot blower and other hole Packing with flange of piping and valve for steam line, exhaust line, fuel line and drain line Lagging material for piping and valve of steam line, exhaust line, fuel line and drain line
Exhaust gas economizer	Packing for casing door Packing with manhole Packing with hand hole Gas shield packing for soot blower Packing with flange of piping and valve for steam line, exhaust line, fuel line and drain line Lagging material for piping and valve of steam line, exhaust line, fuel line and drain line
Incinerator	Packing for casing door Packing with manhole Packing with hand hole Lagging material for exhaust pipe
Auxiliary machinery (pump, compressor, oil purifier, crane)	Packing for casing door and valve Gland packing Brake lining
Heat exchanger	Packing with casing Gland packing for valve Lagging material and insulation

SC 249 (cont)

Valve	Gland packing with valve, sheet packing with piping flange Gasket with flange of high pressure and/or high temperature
Pipe, duct	Lagging material and insulation
Tank (fuel tank, hot water, tank, condenser), other equipments (fuel strainer, lubricant oil strainer)	Lagging material and insulation
Electric equipment	Insulation material
Ceiling, floor and wall in accommodation area	Ceiling, floor, wall
Fire door	Packing, construction and insulation of the fire door
Inert gas system	Packing for casing, etc.
Air-conditioning system	Sheet packing, lagging material for piping and flexible joint
Miscellaneous	Ropes Thermal insulating materials Fire shields/fire proofing Space/duct insulation Electrical cable materials Brake linings Floor tiles/deck underlay Steam/water/vent flange gaskets Adhesives/mastics/fillers Sound damping Moulded plastic products Sealing putty Shaft/valve packing Electrical bulkhead penetration packing Circuit breaker arc chutes Pipe hanger inserts Weld shop protectors/burn covers Fire-fighting blankets/clothing/equipment Concrete ballast

Note:

The above list ~~above~~ is taken from IMO Resolution MEPC.197(62), Appendix 5, paragraph 2.2.2.1.

End of Document

MPC2 Operational manuals for oil discharge monitoring and control systems

(1988) (Rev.1 Aug 2015)

(Annex I, Regulation 31.4)

31.4 Instructions as to the operation of the system shall be in accordance with an operational manual approved by the Administration. They shall cover manual as well as automatic operations and shall be intended to ensure that at no time shall oil be discharged except in compliance with the conditions specified in regulation 34 of this Annex.

Interpretation

For compliance with Regulation 31.4 of MARPOL - Annex I and Resolution MEPC.108(49) as amended by Resolution MEPC.240(65), the Oil Discharge Monitoring and Control System Operational Manual is to contain all the details necessary to operate and maintain the system and should include at least the following information. The information may be grouped as indicated, or in an equivalent manner.

Introduction : Particulars of the ship, together with the date on which the system was/is to be installed and index to remainder of manual.
Text of Regulations 31 and 34 to be quoted in full.

Section 1 : Manufacturer's equipment manuals for major components of the system. These may include installation, commissioning, operating and fault finding procedures for the oil content monitor.

Section 2 : Operations manual comprising a description of the ship's cargo ballast systems, designated overboard discharges with sampling points, normal operational procedures, automatic inputs, manual inputs (as applicable), starting interlock and discharge valve control (as applicable), override system, audible and visual alarms, outputs recorded and, where required for manual input, flow rate when discharging by gravity and when pumping ballast overboard. It should also include instructions for the discharge of oily water following mal-function of the equipment.
The above information is to be supported by copies of relevant approved diagrams.
Reference may be made to Section 1, where applicable.

Notes:

1. Revision 1 of this Unified Interpretation is to be uniformly implemented by IACS Societies for ships contracted for construction on or after 1 July 2016.

2. The "contracted for construction" date means the date on which the contract to build the vessel is signed between the prospective owner and the shipbuilder. For further details regarding the date of "contract for construction", refer to IACS Procedural Requirement (PR) No. 29.

MPC 2
(cont)

Section 3 : Technical manual comprising fault finding schedules, maintenance record and electrical, pneumatic and hydraulic schematic diagrams and descriptions of the complete system.
Reference may be made to Section 1, where applicable.

Section 4 : Test and check-out procedures to include a functional test at installation and guidance notes for the Surveyors carrying out initial and in-service surveys.
Reference may be made to Section 1, where applicable.

Appendix I : Technical installation specification including location and mounting of components, arrangements for maintaining integrity of 'safe' zones, safety requirements for electrical equipment installed in hazardous zones supported by copies of approved drawings, sample piping layout and sample delay calculations, design and arrangements of sampling probes, flushing arrangements and zero setting.
Reference may be made to Section 1, where applicable.

Appendix II : Copy of Type Approval Certificate and Workshop Certificates for major components.

End of Document

MPC6 Calculation of the aggregate capacity of SBT

(1997)
(Rev.1
Aug
2015)

(Regulation 19.3.4)

19.3.4 The aggregate capacity of ballast tanks

On crude oil tankers of 20,000 tonnes deadweight and above and product carriers of 30,000 tonnes deadweight and above, the aggregate capacity of wing tanks, double bottom tanks, forepeak tanks and after peak tanks shall not be less than the capacity of segregated ballast tanks necessary to meet the requirements of regulation 18 of this Annex. Wing tanks or spaces and double bottom tanks used to meet the requirements of regulation 18 shall be located as uniformly as practicable along the cargo tank length. Additional segregated ballast capacity provided for reducing longitudinal hull girder bending stress, trim, etc. may be located anywhere within the ship.

Interpretation

1. Any ballast carried in localized inboard extensions, indentations or recesses of the double hull, such as bulkhead stools, should be excess ballast above the minimum requirement for segregated ballast capacity according to regulation 18.

2. In calculating the aggregate capacity under regulation 19.3.4, the following should be taken into account:

2.1 the capacity of engine-room ballast tanks should be excluded from the aggregate capacity of ballast tanks;

2.2 the capacity of ballast tank located inboard of double hull should be excluded from the aggregate capacity of ballast tanks (see figure 1).

Notes:

1. This IACS Unified Interpretation was submitted to IMO and is contained in MEPC/Circ. 316 of 25th July 1996.

2. Revision 1 of this Unified Interpretation is to be uniformly implemented by IACS Societies for ships contracted for construction on or after 1 July 2016.

3. The "contracted for construction" date means the date on which the contract to build the vessel is signed between the prospective owner and the shipbuilder. For further details regarding the date of "contract for construction", refer to IACS Procedural Requirement (PR) No. 29.

MPC6
(cont)

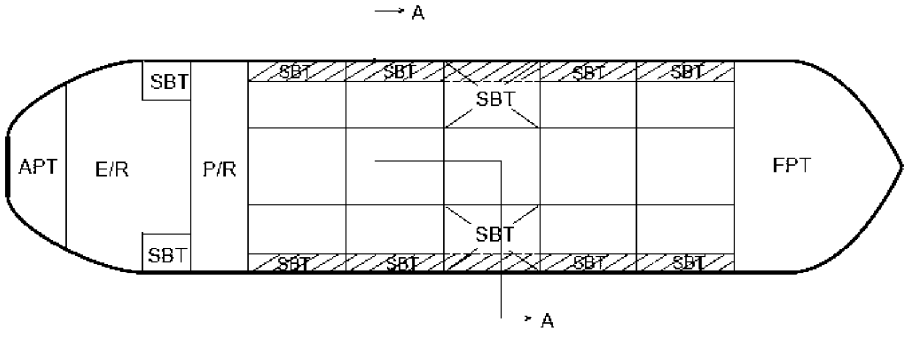

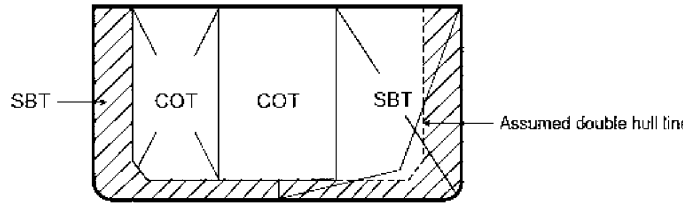

SECTION A-A

Fig. 1

MPC6 2.3 (cont) spaces such as void spaces located in the double hull within the cargo tank length should be included in the aggregate capacity of ballast tanks (see figure 2).

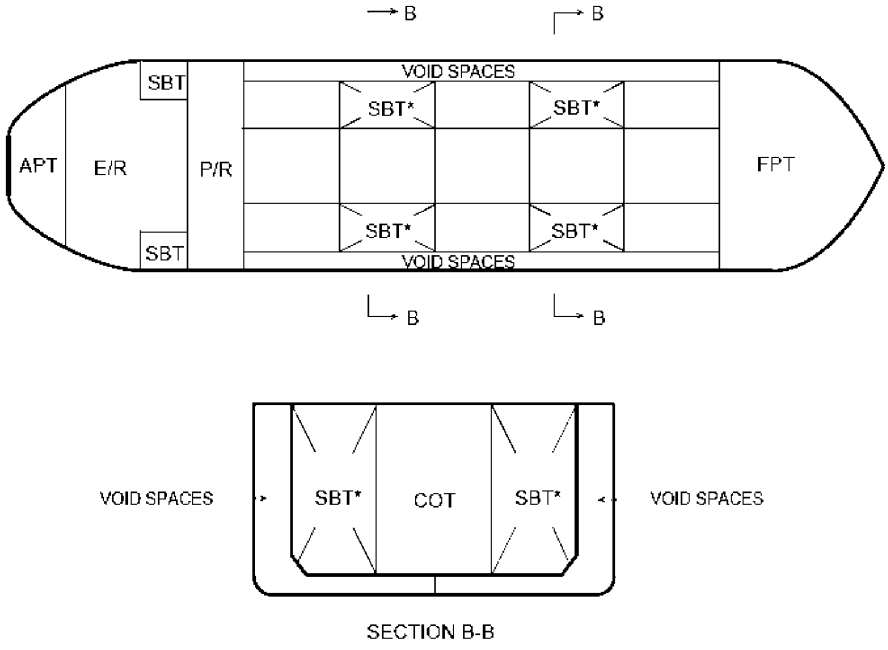

Fig. 2

End of Document

MODU 1 (May 2015) (Rev.1 Oct 2015)

IACS Unified Interpretations for the application of MODU Code Chapter 2 paragraphs 2.1, 2.2, 2.3, 2.4 and revised technical provisions for means of access for inspections (resolution MSC.158(78))

Note:

1. This Unified Interpretation is to be applied by IACS Societies on units contracted for construction from 1 July 2016, unless they are provided with written instructions to apply a different interpretation by the Administration on whose behalf they are authorized to act as a Recognized Organization.

2. Rev.1 is to be applied by IACS Societies on units contracted for construction from 1 January 2017, unless they are provided with written instructions to apply a different interpretation by the Administration on whose behalf they are authorized to act as a Recognized Organization.

~~2~~3. The "contracted for construction" date means the date on which the contract to build the vessel is signed between the prospective owner and the shipbuilder. For further details regarding the date of "contract for construction", refer to IACS Procedural Requirement (PR) No. 29.

MODU 1 (cont)

2009 MODU Code, section 2.2.2

2.2.2 Safe access to holds, tanks, ballast tanks and other spaces

2.2.2.1 Safe access to holds, cofferdams, tanks and other spaces should be direct from the open deck and such as to ensure their complete inspection. Safe access may be from a machinery space, pump-room, deep cofferdam, pipe tunnel, hold, double hull space or similar compartment not intended for the carriage of oil or hazardous materials where it is impracticable to provide such access from an open deck.

2.2.2.2 Tanks, and subdivisions of tanks, having a length of 35 m or more, should be fitted with at least two access hatchways and ladders, as far apart as practicable. Tanks less than 35 m in length should be served by at least one access hatchway and ladder. When a tank is subdivided by one or more swash bulkheads or similar obstructions which do not allow ready means of access to the other parts of the tank, at least two hatchways and ladders should be fitted.

Interpretation

This regulation is only applicable to integral tanks. Independent tanks can be excluded. Also, spud cans and jack cases of self-elevating units can be excluded.

The wording "not intended for the carriage of oil or hazardous materials" applies only to "similar compartments", i.e. safe access can be through a pump-room, deep cofferdam, pipe tunnel, cargo hold or double hull space.

Technical Background

Means of Access (MA) specified in the Technical provisions contained in resolution MSC.158(78) are not specific with respect to the application to integral tanks or also to independent tanks. The MA regulated under 2.2.1.1 of the 2009 IMO MODU Code is for overall and close-up inspections and thickness measurements of the unit's structure. Independent tanks are not considered part of the unit's structure. Therefore it is assumed that the target tanks are integral tanks.

MODU 1 (cont)

2009 MODU Code, section 2.2.1.2

2.2.1.2 Where a permanent means of access may be susceptible to damage during normal operations or where it is impracticable to fit permanent means of access, the Administration may allow, in lieu thereof, the provision of movable or portable means of access, as specified in the Technical provisions, provided that the means of attaching, rigging, suspending or supporting the portable means of access forms a permanent part of the unit's structure. All portable equipment shall be capable of being readily erected or deployed by unit's personnel.

Interpretation

Some possible alternative means of access are listed under paragraph 3.9 of the MODU Technical Provisions for means of access for inspection (MODU TP). Always subject to acceptance as equivalent by the Administration, alternative means such as an unmanned robot arm, ROV's with necessary equipment of the permanent means of access for overall and close-up inspections and thickness measurements of the deck head structure such as deck transverses and deck longitudinals of ballast tanks and other tanks, holds and other spaces where gas hazardous atmosphere may be present, are to be capable of:

- safe operation in ullage space in gas-free environment;
- introduction into the place directly from a deck access.

When considering use of alternative means of access as addressed by paragraph 3.9 of the MODU TP, refer to IACS Recommendation No.91 "Guidelines for Approval/Acceptance of Alternative Means of Access".

Technical Background

Innovative approaches, in particular a development of robot in place of elevated passageways, are encouraged and it is considered worthwhile to provide the functional requirement for the innovative approach.

MODU 1 (cont)

2009 MODU Code, section 2.2.1.3

2.2.1.3 The construction and materials of all means of access and their attachment to the unit's structure should be to the satisfaction of the Administration. The means of access should be subject to inspection prior to, or in conjunction with, its use in carrying out surveys in accordance with section 1.6.

Interpretation

Note: This interpretation is to be contained in a section of the MA Manual.

Inspection

The MA arrangements, including portable equipment and attachments, are to be periodically inspected by the crew or competent inspectors as and when it is going to be used to confirm that the MAs remain in serviceable condition.

Procedures

1. Any Company authorised person using the MA shall assume the role of inspector and check for obvious damage prior to using the access arrangements. Whilst using the MA the inspector is to verify the condition of the sections used by close up examination of those sections and note any deterioration in the provisions. Should any damage or deterioration be found, the effect of such deterioration is to be assessed as to whether the damage or deterioration affects the safety for continued use of the access. Deterioration found that is considered to affect safe use is to be determined as "substantial damage" and measures are to be put in place to ensure that the affected section(s) are not to be further used prior effective repair.

2. Statutory survey of any space that contains MA shall include verification of the continued effectiveness of the MA in that space. Survey of the MA shall not be expected to exceed the scope and extent of the survey being undertaken. If the MA is found deficient the scope of survey is to be extended if this is considered appropriate.

3. Records of all inspections are to be established based on the requirements detailed in the MODU's Safety Management System. The records are to be readily available to persons using the MAs and a copy attached to the MA Manual. The latest record for the portion of the MA inspected is to include as a minimum the date of the inspection, the name and title of the inspector, a confirmation signature, the sections of MA inspected, verification of continued serviceable condition or details of any deterioration or substantial damage found. A file of permits issued is to be maintained for verification.

Technical Background

It is recognised that MA may be subject to deterioration in the long term due to corrosive environment and external forces from unit motions and sloshing of liquid contained in the tank. MA therefore is to be inspected at every opportunity of tank/space entry.

MODU 1 (cont)

2009 MODU Code, paragraph 2.2.2.2

2.2.2.2 Tanks, and subdivisions of tanks, having a length of 35 m or more, should be fitted with at least two access hatchways and ladders, as far apart as practicable. Tanks less than 35 m in length should be served by at least one access hatchway and ladder. When a tank is subdivided by one or more swash bulkheads or similar obstructions which do not allow ready means of access to the other parts of the tank, at least two hatchways and ladders should be fitted.

Interpretation

A tank of less than 35 m length without a swash bulkhead requires only one access hatch.

Where rafting is indicated in the access manual as the means to gain ready access to the under deck structure, the term *"similar obstructions"* referred to in the regulation includes internal structures (e.g., webs >1.5m deep) which restrict the ability to raft (at the maximum water level needed for rafting of under deck structure) directly to the nearest access ladder and hatchway to deck. When rafts or boats alone, as an alternative means of access are allowed, permanent means of access are to be provided to allow safe entry and exit. This means:

a) access direct from the deck via a vertical ladder and small platform fitted approximately 2m below the deck in each bay; or

b) access to deck from a longitudinal permanent platform having ladders to deck in each end of the tank. The platform shall, for the full length of the tank, be arranged in level with, or above, the maximum water level needed for rafting of under deck structure. For this purpose, the ullage corresponding to the maximum water level is to be assumed not more than 3m from the deck plate measured at the midspan of deck transverses and in the middle length of the tank. A permanent means of access from the longitudinal permanent platform to the water level indicated above is to be fitted in each bay (e.g. permanent rungs on one of the deck webs inboard of the longitudinal permanent platform).

MODU 1 (cont)

2009 MODU Code, section 2.2.3

2.2.3 Access manual

2.2.3.1 A unit's means of access to carry out overall and close-up inspections and thickness measurements should be described in an access manual which may be incorporated in the unit's operating manual. The manual should be updated as necessary, and an updated copy maintained on board. The access manual should include the following for each space:

.1.1 plans showing the means of access to the space, with appropriate technical specifications and dimensions;

.1.2 plans showing the means of access within each space to enable an overall inspection to be carried out, with appropriate technical specifications and dimensions. The plans should indicate from where each area in the space can be inspected;

.1.3 plans showing the means of access within the space to enable close-up inspections to be carried out, with appropriate technical specifications and dimensions. The plans should indicate the positions of critical structural areas, whether the means of access is permanent or portable and from where each area can be inspected;

.1.4 instructions for inspecting and maintaining the structural strength of all means of access and means of attachment, taking into account any corrosive atmosphere that may be within the space;

.1.5 instructions for safety guidance when rafting is used for close-up inspections and thickness measurements;

.1.6 instructions for the rigging and use of any portable means of access in a safe manner;

.1.7 an inventory of all portable means of access; and

.1.8 records of periodical inspections and maintenance of the unit's means of access.

Interpretation

The access manual is to address spaces listed in section 2.2.2.

As a minimum the English version is to be provided.

The access manual is to contain at least the following two parts:

Part 1: Plans, instructions and inventory required by paragraphs .1.1 to .1.7 of section 2.2.3.1. This part is to be approved by the Administration or the organization recognised by the Administration.

Part 2: Form of record of inspections and maintenance, and change of inventory of portable equipment due to additions or replacement after construction. This part is to be approved for its form only at new building.

The following matters are to be addressed in the access manual:

1. The access manual is to clearly cover scope as specified in the regulations for use by crews, surveyors and port State control officers.

MODU 1 (cont)

2. Approval / re-approval procedure for the manual, i.e. any changes of the permanent, portable, movable or alternative means of access within the scope of the regulation and the Technical provisions are subject to review and approval by the Administration or by the organization recognised by the Administration.

3. Verification of MA is to be part of safety construction survey for continued effectiveness of the MA in that space which is subject to the statutory survey.

4. Inspection of MA by the crew and/or a competent inspector of the company as a part of regular inspection and maintenance (see interpretation for section 2.2.1.3).

5. Actions to be taken if MA is found unsafe to use.

6. In case of use of portable equipment plans showing the means of access within each space indicating from where and how each area in the space can be inspected.

Refer to IACS Recommendation No.90 "Ship Structural Access Manual"

MODU 1 (cont)

2009 MODU Code, section 2.2.3.2

2.2.3.2 For the purpose of this paragraph "critical structural areas" are locations which have been identified from calculations to require monitoring or from the service history of similar or sister units to be sensitive to cracking, buckling, deformation or corrosion which would impair the structural integrity of the unit.

Interpretation

Critical structural areas are to be identified by advanced calculation techniques for structural strength and fatigue performance, if available, and feed back from the service history and design development of similar or sister units.

MODU 1 (cont)

2009 MODU Code, section 2.2.4.1

2.2.4 General technical specifications

2.2.4.1 For access through horizontal openings, hatches or manholes, the dimensions should be sufficient to allow a person wearing a self-contained air-breathing apparatus and protective equipment to ascend or descend any ladder without obstruction and also provide a clear opening to facilitate the hoisting of an injured person from the bottom of a confined space. The minimum clear opening should not be less than 600 mm x 600 mm. When access to a hold is arranged through a flush manhole in the deck or a hatch, the top of the ladder should be placed as close as possible to the deck or hatch coaming. Access hatch coamings having a height greater than 900 mm should also have steps on the outside in conjunction with the ladder.

Interpretation

The minimum clear opening of 600 mm x 600 mm may have corner radii up to 100 mm maximum. The clear opening is specified in MSC/Circ.686 to keep the opening fit for passage of personnel wearing a breathing apparatus. In such a case where as a consequence of structural analysis of a given design the stress is to be reduced around the opening, it is considered appropriate to take measures to reduce the stress such as making the opening larger with increased radii, e.g. 600 x 800 with 300 mm radii, in which a clear opening of 600 x 600 mm with corner radii up to 100mm maximum fits.

Technical Background

The interpretation is based upon the established Guidelines in MSC/Circ.686.

Ref.

Paragraphs 9 of Annex of MSC/Circ.686.

MODU 1 (cont)

2009 MODU Code, section 2.2.4.2

2.2.4.2 For access through vertical openings, or manholes, in swash bulkheads, floors, girders and web frames providing passage through the length and breadth of the space, the minimum clear opening should be not less than 600 mm x 800 mm at a height of not more than 600 mm from the bottom shell plating unless gratings or other foot holds are provided.

Interpretation

1. The minimum clear opening of not less than 600 mm x 800 mm may also include an opening with corner radii of 300 mm. An opening of 600mm in height x 800mm in width may be accepted as access openings in vertical structures where it is not desirable to make large opening in the structural strength aspects, i.e. girders and floors in double bottom tanks.

2. Subject to verification of easy evacuation of injured person on a stretcher the vertical opening 850 mm x 620 mm with wider upper half than 600 mm, while the lower half may be less than 600 mm with the overall height not less than 850 mm is considered an acceptable alternative to the traditional opening of 600 mm x 800 mm with corner radii of 300 mm.

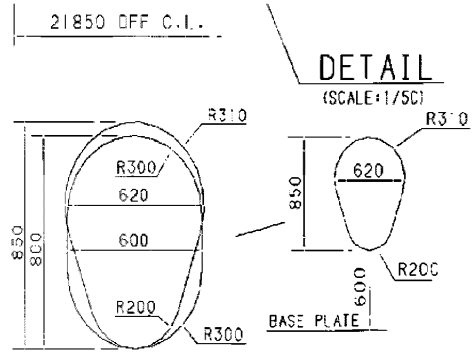

3. If a vertical opening is at a height of more than 600 mm steps and handgrips are to be provided. In such arrangements it is to be demonstrated that an injured person can be easily evacuated.

Technical Background

The interpretation is based upon the established Guidelines in MSC/Circ.686 and an innovative design is considered for easy access by humans through the opening.

Ref.

Paragraphs 11 of Annex of MSC/Circ.686.

MODU 1 (cont)

Appendix 1

Unified Interpretation of IMO Resolution MSC. 133(76), as amended by resolution MSC. 158(78), as applicable for MODUs

Note: This document has been derived from IMO Resolution 133(76) for the purpose of interpretation for Mobile Offshore Drilling Units.

1. Preamble

1.1 It has long been recognized that the only way of ensuring that the condition of a MODU's structure is maintained to conform to the applicable requirements is for all its components to be surveyed on a regular basis throughout their operational life. This will ensure that they are free from damage such as cracks, buckling or deformation due to corrosion, overloading, or contact damage and that thickness diminution is within established limits. The provision of suitable means of access to the hull structure for the purpose of carrying out overall and close-up surveys and inspections is essential and such means should be considered and provided for at the design stage.

1.2 MODUs should be designed and built with due consideration as to how they will be surveyed by flag State inspectors and classification society surveyors during their in-service life and how the crew will be able to monitor the condition of the MODU. Without adequate access, the structural condition of the MODU can deteriorate undetected and major structural failure can arise. A comprehensive approach to design and maintenance is required to cover the whole projected life of the MODU.

1.3 In order to address this issue these Technical provisions for means of access for inspections have been developed (hereinafter called the Technical provisions), intended to facilitate close-up inspections and thickness measurements of the MODU's structure referred to in 2009 MODU Code, paragraph 2.2 on Access.

1.4 Permanent means of access which are designed to be integral parts of the structure itself are preferred and Administrations may allow reasonable deviations to facilitate such designs.

Interpretation

In the context of the above requirement, the deviation shall be applied only to distances between integrated PMA that are the subject of paragraph 2.1.2 of Table 1.

Deviations should not be applied to the distances governing the installation of underdeck longitudinal walkways and dimensions that determine whether permanent access are required or not, such as height of the spaces and height to elements of the structure (e.g. cross-ties).

2. Definitions

For the purpose of these Technical provisions, the following definitions apply in addition to those provided in the 2009 MODU Code, as amended:

.1 Rung means the step of a vertical ladder or step on the vertical surface.

.2 Tread means the step of an inclined ladder or step for the vertical access opening.

MODU 1 (cont)

.3 Flight of an inclined ladder means the actual stringer length of an inclined ladder. For vertical ladders, it is the distance between the platforms.

.4 Stringer means:

.1 the frame of a ladder; or

.2 the stiffened horizontal plating structure fitted on the side shell, transverse bulkheads and/or longitudinal bulkheads in the space. For the purpose of ballast tanks of less than 5 m width, the horizontal plating structure is credited as a stringer and a longitudinal permanent means of access, if it provides a continuous passage of 600 mm or more in width past frames or stiffeners on the side shell or longitudinal or transverse bulkhead. Openings in stringer plating utilized as permanent means of access shall be arranged with guard rails or grid covers to provide safe passage on the stringer or safe access to each transverse web.

.5 Vertical ladder means a ladder of which the inclined angle is 70° and over up to 90°. A vertical ladder shall not be skewed by more than 2°.

.6 Overhead obstructions mean the deck or stringer structure including stiffeners above the means of access.

.7 Distance below deck head means the distance below the plating.

.8 Cross deck means the transverse area of the main deck which is located inboard and at both sides of a transverse bulkhead. Between large hatches/holds or between moonpool opening and hatches/holds of a drillship or column stabilized unit.

.9 Hold means any dry space other than a machinery space located within the hull of surface units and self-elevating units or within the upper hull, columns or pontoons of column-stabilized units. Dry storage spaces and void spaces are considered holds.

3. Technical provisions

3.1 Structural members subject to the close-up inspections and thickness measurements of the MODU's structure referred to in 2009 MODU Code, section 2.2, except those in double bottom spaces, shall be provided with a permanent means of access to the extent as specified in table 1. Approved alternative methods may be used in combination with the fitted permanent means of access, provided that the structure allows for its safe and effective use.

Interpretation

The permanent means of access to a space can be credited for the permanent means of access for inspection.

Technical Background

The Technical provisions specify means of access to a space and to hull structure for carrying out overall and close up surveys and inspections. Requirements of MA to hull structure may not always be suitable for access to a space. However if the MA for access to a space can also be used for the intended surveys and inspections such MA can be credited for the MA for use for surveys and inspections.

MODU 1 (cont)

3.2 Permanent means of access should as far as possible be integral to the structure of the MODU, thus ensuring that they are robust and at the same time contributing to the overall strength of the structure of the MODU.

3.3 Elevated passageways forming sections of a permanent means of access, where fitted, shall have a minimum clear width of 600 mm, except for going around vertical webs where the minimum clear width may be reduced to 450 mm, and have guard rails over the open side of their entire length. Sloping structures providing part of the access shall be of a non-skid construction. Guard rails shall be 1,000 mm in height and consist of a rail and an intermediate bar 500 mm in height and of substantial construction. Stanchions shall be not more than 3 m apart.

Interpretation

1. Sloping structures are structures that are sloped by 5 or more degrees from horizontal plane when a unit is in upright position at even-keel.

2. Guard rails are to be fitted on the open side. For stand alone passageways guard rails are to be fitted on both sides of these structures.

3. Discontinuous top handrails are allowed, provided the gap does not exceed 50 mm.

The same maximum gap is to be considered between the top handrail and other structural members (i.e. bulkhead, web frame, etc.).

The maximum distance between the adjacent stanchions across the handrail gaps is to be 350 mm where the top and mid handrails are not connected together and 550 mm when they are connected together.

The maximum distance between the stanchion and other structural members is not to exceed 200 mm where the top and mid handrails are not connected together and 300 mm when they are connected together.

When the top and mid handrails are connected by a bent rail, the outside radius of the bent part is not to exceed 100 mm (see Figure below).

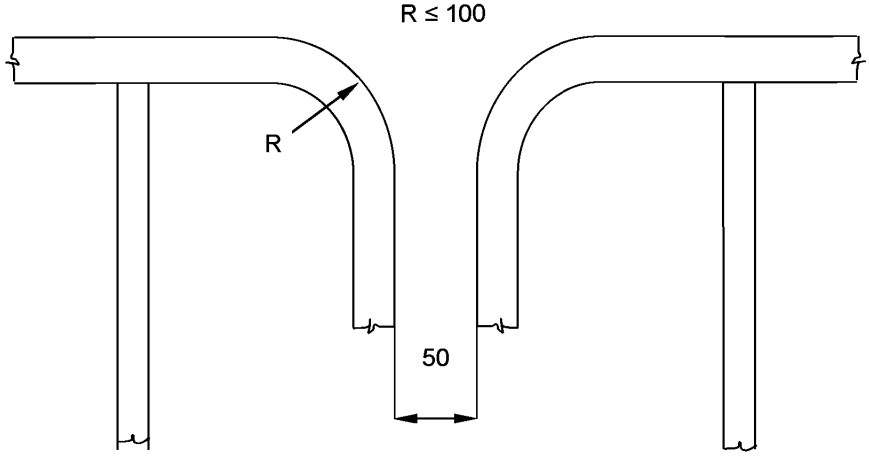

MODU 1 (cont)

4. Non-skid construction is such that the surface on which personnel walks provides sufficient friction to the sole of boots even if the surface is wet and covered with thin sediment.

5. "Substantial construction" is taken to refer to the designed strength as well as the residual strength during the service life of the unit. Durability of passageways together with guard rails is to be ensured by the initial corrosion protection and inspection and maintenance during services.

6. For guard rails, use of alternative materials such as GRP is to be subject to compatibility with the liquid carried in the tank. Non-fire resistant materials are not to be used for means of access to a space with a view to securing an escape route at a high temperature.

7. Requirements for resting platforms placed between ladders are equivalent to those applicable to elevated passageways.

Ref.

Paragraph 10 of Annex to MSC/Circ.686

3.4 Access to permanent means of access and vertical openings from the MODU's bottom shall be provided by means of easily accessible passageways, ladders or treads. Treads shall be provided with lateral support for the foot. Where the rungs of ladders are fitted against a vertical surface, the distance from the centre of the rungs to the surface shall be at least 150 mm. Where vertical manholes are fitted higher than 600 mm above the walking level, access shall be facilitated by means of treads and hand grips with platform landings on both sides.

Interpretation

Where the vertical manhole is at a height of more than 600 mm above the walking level, it shall be demonstrated that an injured person can be easily evacuated.

3.5 Permanent inclined ladders shall be inclined at an angle of less than 70°. There shall be no obstructions within 750 mm of the face of the inclined ladder, except that in way of an opening this clearance may be reduced to 600 mm. Resting platforms of adequate dimensions shall be provided, normally at a maximum of 6 m vertical height. Ladders and handrails shall be constructed of steel or equivalent material of adequate strength and stiffness and securely attached to the structure by stays. The method of support and length of stay shall be such that vibration is reduced to a practical minimum. In holds, ladders shall be designed and arranged so that stores handling difficulties are not increased and the risk of damage from stores handling gear is minimized.

MA for access to ballast tanks and other tanks:

1. Tanks and subdivisions of tanks having a length of 35 m or more with two access hatchways:

First access hatchway: Inclined ladder or ladders are to be used.

Second access hatchway:

MODU 1 (cont)

i. A vertical ladder may be used. In such a case where the vertical distance is more than 6 m, vertical ladders are to comprise one or more ladder linking platforms spaced not more than 6 m apart vertically and displaced to one side of the ladder.

The uppermost section of the vertical ladder, measured clear of the overhead obstructions in way of the tank entrance, is not to be less than 2.5 m but not exceed 3.0 m and is to comprise a ladder linking platform which is to be displaced to one side of a vertical ladder. However, the vertical distance of the upper most section of the vertical ladder may be reduced to 1.6 m, measured clear of the overhead obstructions in way of the tank entrance, if the ladder lands on a longitudinal or athwartship permanent means of access fitted within that range; or

ii. Where an inclined ladder or combination of ladders is used for access to the space, the uppermost section of the ladder, measured clear of the overhead obstructions in way of the tank entrance, is to be vertical for not less than 2.5 m but not exceed 3.0m and is to comprise a landing platform continuing with an inclined ladder. However, the vertical distance of the upper most section of the vertical ladder may be reduced to 1.6 m, measured clear of the overhead obstructions in way of the tank entrance, if the ladder lands on a longitudinal or athwartship permanent means of access fitted within that range. The flights of the inclined ladders are normally to be not more than 6 m in vertical height. The lowermost section of the ladders may be vertical for the vertical distance not exceeding 2.5 m.

2. Tanks less than 35 m in length and served by one access hatchway an inclined ladder or combination of ladders are to be used to the space as specified in 1.ii above.

3. In double hull spaces of less than 2.5 m width the access to the space may be by means of vertical ladders that comprises one or more ladder linking platforms spaced not more than 6 m apart vertically and displaced to one side of the ladder. The uppermost section of the vertical ladder, measured clear of the overhead obstructions in way of the tank entrance, is not to be less than 2.5 m but not exceed 3.0 m and is to comprise a ladder linking platform which is to be displaced to one side of a vertical ladder. However, the vertical distance of the upper most section of the vertical ladder may be reduced to 1.6 m, measured clear of the overhead obstructions in way of the tank entrance, if the ladder lands on a longitudinal athwartship permanent means of access fitted within that range. Adjacent sections of the ladder are to be laterally offset from each other by at least the width of the ladder (see paragraph 20 of MSC/Circ.686).

4. Access from deck to a double bottom space may be by means of vertical ladders through a trunk. The vertical distance from deck to a resting platform, between resting platforms or a resting platform and the tank bottom is not to be more than 6 m unless otherwise approved by the Administration.

MA for inspection of the vertical structure:

Vertical ladders provided for means of access to the space may be used for access for inspection of the vertical structure.

Unless stated otherwise in Table 1 of MODU TP, vertical ladders that are fitted on vertical structures for inspection are to comprise one or more ladder linking platforms spaced not more than 6 m apart vertically and displace to one side of the ladder. Adjacent sections of ladder are to be laterally offset from each other by at least the width of the ladder (paragraph 20 of MSC/Circ.686).

MODU 1 (cont)

Obstruction distances

The minimum distance between the inclined ladder face and obstructions, i.e. 750 mm and, in way of openings, 600 mm specified in MODU TP 3.5 is to be measured perpendicular to the face of the ladder.

Technical Background

It is a common practice to use a vertical ladder from deck to the first landing to clear overhead obstructions before continuing to an inclined ladder or a vertical ladder displaced to one side of the first vertical ladder.

Ref.

For vertical ladders: Paragraph 20 of the annex to MSC/Circ.686.

3.6 The width of inclined ladders between stringers shall not be less than 400 mm. The treads shall be equally spaced at a distance apart, measured vertically, of between 200 mm and 300 mm. When steel is used, the treads shall be formed of two square bars of not less than 22 mm by 22 mm in section, fitted to form a horizontal step with the edges pointing upward. The treads shall be carried through the side stringers and attached thereto by double continuous welding. All inclined ladders shall be provided with handrails of substantial construction on both sides, fitted at a convenient distance above the treads.

Interpretation

1. Vertical height of handrails is not to be less than 890 mm from the centre of the step and two course handrails are to be provided.

2. The requirement of two square bars for treads specified in MODU TP, paragraph 3.6, is based upon the specification of construction of ladders in paragraph 3(e) of Annex 1 to resolution A.272(VIII), which addresses inclined ladders. MODU TP, paragraph 3.4, allows for single rungs fitted to vertical surfaces, which is considered for a safe grip. For vertical ladders, when steel is used, the rungs are to be formed of single square bars of not less than 22 mm by 22 mm for the sake of safe grip.

3. The width of inclined ladders for access to a hold is to be at least 450 mm to comply with the Australian AMSA Marine Orders Part 32, Appendix 17.

4. The width of inclined ladders other than an access to a hold is to be not less than 400 mm.

5. The minimum width of vertical ladders is to be 350 mm and the vertical distance between the rungs is to be equal and is to be between 250 mm and 350 mm.

6. A minimum climbing clearance in width is to be 600 mm other than the ladders placed between the hold frames.

7. The vertical ladders are to be secured at intervals not exceeding 2.5 m apart to prevent vibration.

MODU 1 (cont)

Technical Background

- MODU TP, paragraph 3.6, is a continuation of MODU TP, paragraph 3.5, which addresses inclined ladders. Interpretations for vertical ladders are needed based upon the current standards of IMO, AMSA or the industry.
- Interpretations 2 and 5 address vertical ladders based upon the current standards.
- Double square bars for treads become too large for a grip for vertical ladders and single rungs facilitate a safe grip.
- Interpretation 7 is introduced consistently with the requirement and the interpretation of MODU TP, paragraph 3.4.

Ref.

- Annex 1 to resolution A.272(VIII).
- Australian AMSA Marine Orders Part 32, Appendix 17.
- ILO Code of Practice "Safety and Health in Dockwork" – Section 3.6 Access to Ship's Holds.

3.7 For vertical ladders or spiral ladders, the width and construction should be in accordance with international or national standards accepted by the Administration.

3.8 No free-standing portable ladder shall be more than 5 m long.

3.9 Alternative means of access include, but are not limited to, such devices as:

.1 hydraulic arm fitted with a stable base;

.2 wire lift platform;

.3 staging;

.4 rafting;

.5 robot arm or remotely operated vehicle (ROV);

.6 portable ladders more than 5 m long shall only be utilized if fitted with a mechanical device to secure the upper end of the ladder;

Interpretation

A mechanical device such as hooks for securing at the upper end of a ladder is to be considered as an appropriate securing device if a movement fore/aft and sideways can be prevented at the upper end of the ladder.

Technical Background

Innovative design is to be accepted if it fits for the functional requirement with due consideration for safe use.

.7 other means of access, approved by and acceptable to the Administration.

MODU 1 (cont)

Means for safe operation and rigging of such equipment to and from and within the spaces shall be clearly described in the MODU's Structure Access Manual.

3.10 For access through horizontal openings, hatches or manholes, the dimensions shall be sufficient to allow a person wearing a self-contained air-breathing apparatus and protective equipment to ascend or descend any ladder without obstruction and also provide a clear opening to facilitate the hoisting of an injured person from the bottom of a confined space. The minimum clear opening shall not be less than 600 mm x 600 mm. When access to a hold is arranged through a flush manhole in the deck or a hatch, the top of the ladder shall be placed as close as possible to the deck or hatch coaming. Access hatch coamings having a height greater than 900 mm shall also have steps on the outside in conjunction with the ladder.

3.11 For access through vertical openings, or manholes, in swash bulkheads, floors, girders and web frames providing passage through the length and breadth of the space, the minimum clear opening shall be not less than 600 mm x 800 mm at a height of not more than 600 mm from the passage bottom plating unless gratings or other foot holds are provided.

Interpretation

See interpretation for sections 2.2.4.1and 2.2.4.2 of 2009 MODU Code.

3.12 The Administration may approve, in special circumstances, smaller dimensions for the openings referred to in paragraphs 3.10 and 3.11, if the ability to traverse such openings or to remove an injured person can be proved to the satisfaction of the Administration.

3.13 Access ladders to large holds and other similar spaces shall be:

.1 Where the vertical distance between the upper surface of adjacent decks or between deck and the bottom of the hold is not more than 6 m, either a vertical ladder or an inclined ladder.

Interpretation

Either a vertical or an inclined ladder or a combination of them may be used for access to a large hold where the vertical distance is 6 m or less from the deck to the bottom of the hold.

.2 Where the vertical distance between the upper surface of adjacent decks or between deck and the bottom of the hold is more than 6 m, an inclined ladder or series of inclined ladders at one end of the hold, except the uppermost 2.5 m of a hold measured clear of overhead obstructions and the lowest 6 m may have vertical ladders, provided that the vertical extent of the inclined ladder or ladders connecting the vertical ladders is not less than 2.5 m.

The second means of access at the other end of the hold may be formed of a series of staggered vertical ladders, which should comprise of one or more ladder linking platforms spaced not more than 6 m apart vertically and displaced to one side of the ladder. Adjacent sections of ladder should be laterally offset from each other by at least the width of the ladder. The uppermost entrance section of the ladder directly exposed to a hold should be vertical for a distance of 2.5 m measured clear of overhead obstructions and connected to a ladder-linking platform.

MODU 1 (cont)

Interpretation

Adjacent sections of vertical ladder need to be installed so that the following provisions are complied with (refer to figure A and figure B):

- The minimum "lateral offset". between two adjacent sections of vertical ladder, is the distance between the sections, upper and lower, so that the adjacent stringers are spaced of at least 200 mm, measured from half thickness of each stringer.

- Adjacent sections of vertical ladder shall be installed so that the upper end of the lower section is vertically overlapped, in respect to the lower end of the upper section, to a height of 1500 mm in order to permit a safe transfer between ladders.

- No section of the access ladder shall be terminated directly or partly above an access opening.

Technical Background

The aims of the above are to:

a. Ensure there is a rest platform at appropriate intervals, reducing the risk of accidents due to tiredness.

b. Reduce the risk of collateral injury from falling or dropping items of equipment, by preventing the lateral overlap of two ladders.

.3 A vertical ladder may be used as a means of access from a deck to a tank or space below, where the vertical distance is 6 m or less between the deck and the longitudinal means of access in the tank or the stringer or the bottom of the space immediately below the entrance. The uppermost entrance section from deck of the vertical ladder of the tank should be vertical for a distance of 2.5 m measured clear of overhead obstructions and comprise a ladder linking platform, unless landing on the longitudinal means of access, the stringer or the bottom within the vertical distance, displaced to one side of a vertical ladder.

.4 Unless allowed in .3 above, an inclined ladder or combination of ladders should be used for access to a tank or a space where the vertical distance is greater than 6 m between the deck and a stringer immediately below the entrance, between stringers, or between the deck or a stringer and the bottom of the space immediately below the entrance.

.5 In case of .4 above, the uppermost entrance section from deck of the ladder should be vertical for a distance of 2.5 m clear of overhead obstructions and connected to a landing platform and continued with an inclined ladder. The flights of inclined ladders should not be more than 9 m in actual length and the vertical height should not normally be more than 6 m. The lowermost section of the ladders may be vertical for a distance of not less than 2.5 m.

.6 In narrow spaces of less than 2.5 m width, the access to the space may be by means of vertical ladders that comprise of one or more ladder linking platforms spaced not more than 6 m apart vertically and displaced to one side of the ladder. Adjacent sections of ladder should be laterally offset from each other by at least the width of the ladder.

MODU 1 (cont)

Interpretation

Adjacent sections of vertical ladder need to be installed so that the following provisions are complied with (refer to figure A and figure B):

- The minimum "lateral offset". between two adjacent sections of vertical ladder, is the distance between the sections, upper and lower, so that the adjacent stringers are spaced of at least 200 mm, measured from half thickness of each stringer.

- Adjacent sections of vertical ladder shall be installed so that the upper end of the lower section is vertically overlapped, in respect to the lower end of the upper section, to a height of 1500 mm in order to permit a safe transfer between ladders.

- No section of the access ladder shall be terminated directly or partly above an access opening.

Technical Background

The aims of the above are to:

a. Ensure there is a rest platform at appropriate intervals, reducing the risk of accidents due to tiredness.

b. Reduce the risk of collateral injury from falling or dropping items of equipment, by preventing the lateral overlap of two ladders

.7 A spiral ladder is considered acceptable as an alternative for inclined ladders. In this regard, the uppermost 2.5 m can continue to be comprised of the spiral ladder and need not change over to vertical ladders.

3.14 The uppermost entrance section from deck of the vertical ladder providing access to a tank should be vertical for a distance of 2.5 m measured clear of overhead obstructions and comprise a ladder linking platform, displaced to one side of a vertical ladder. The vertical ladder can be between 1.6 m and 3 m below deck structure if it lands on a longitudinal or athwartship permanent means of access fitted within that range.

Interpretation

Deck is defined as "weather deck".

MODU 1 (cont)

Figure "A"

Vertical Ladder – Ladder through the linking platform

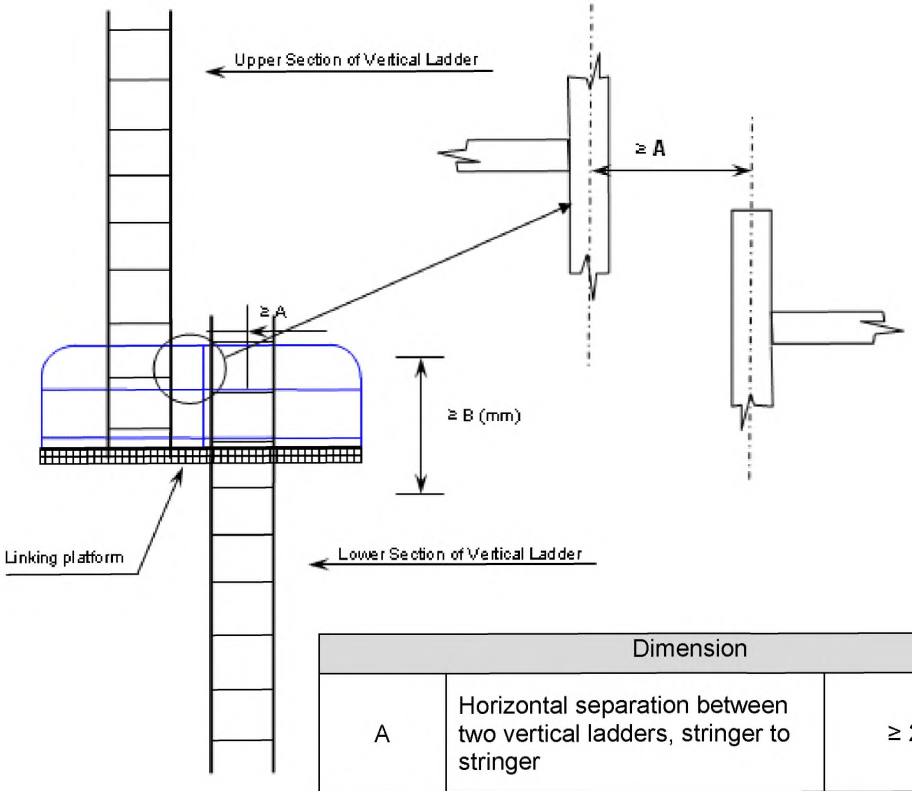

Dimension		
A	Horizontal separation between two vertical ladders, stringer to stringer	≥ 200 mm
B	Stringer height above landing or intermediate platform	≥ 1500* mm
C	Horizontal separation between ladder and platform	100 mm ≤C< 300 mm
*Note: the minimum height of the handrail stanchions of resting platform is of 1000 mm (Technical Provision, resolution MSC.158(78), paragraph 3.3)		

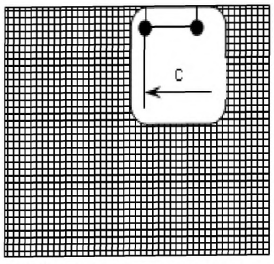

MODU 1 (cont)

Figure "B"

Vertical Ladder – Side mount

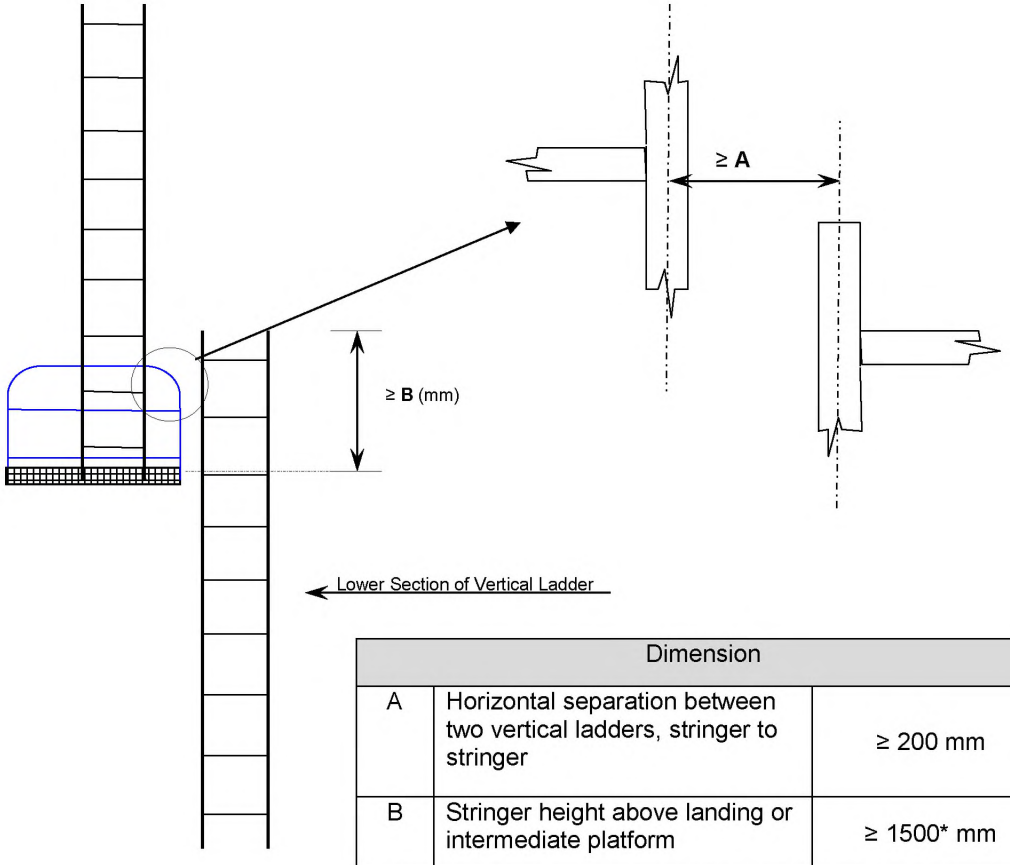

Dimension		
A	Horizontal separation between two vertical ladders, stringer to stringer	≥ 200 mm
B	Stringer height above landing or intermediate platform	≥ 1500* mm
C	Horizontal separation between ladder and platform	100 mm ≤C< 300 mm
*Note: the minimum height of the handrail stanchions of resting platform is of 1000 mm (Technical Provision, resolution MSC.158(78), paragraph 3.3)		

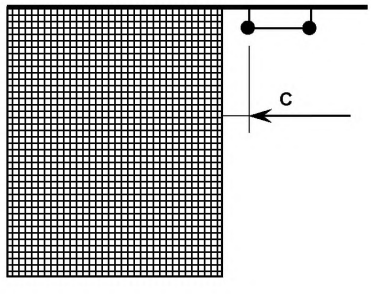

MODU 1 (cont)

Table 1 - Means of access

1 Water ballast tanks, except those specified in the right column, and other tanks	2 Water ballast tanks of less than 5 m width
Access to the underdeck and vertical structure	
1.1 For tanks of which the height is 6 m and over containing internal structures, permanent means of access shall be provided in accordance with .1 to .6:	2.1 For water ballast tanks of less than 5 m width (including double side spaces above the upper knuckle point of the bilge hopper sections in surface units), permanent means of access are to be provided in accordance with .1 to .3:
.1 continuous athwartship permanent access arranged at each transverse bulkhead on the stiffened surface, at a minimum of 1.6 m to a maximum of 3 m below the deck head;	.1 where the vertical distance between horizontal uppermost stringer and deck head is 6 m or more, one continuous longitudinal permanent means of access shall be provided for the full length of the tank with a means to allow passing through transverse webs installed at a minimum of 1.6 m to a maximum of 3 m below the deck head with a vertical access ladder at each end of the tank;
.2 at least one continuous longitudinal permanent means of access at each side of the tank. One of these accesses shall be at a minimum of 1.6 m to a maximum of 6 m below the deck head and the other shall be at a minimum of 1.6 m to a maximum of 3 m below the deck head;	.2 continuous longitudinal permanent means of access, which are integrated in the structure, at a vertical distance not exceeding 6 m apart; and
.3 access between the arrangements specified in .1 and .2 and from the deck above the tanks to either .1 or .2;	.3 plated stringers shall, as far as possible, be in alignment with horizontal girders of transverse bulkheads.
.4 continuous longitudinal permanent means of access which are integrated in the structural member on the stiffened surface of a longitudinal bulkhead, in alignment, where possible, with horizontal girders of transverse bulkheads are to be provided for access to the transverse webs unless permanent fittings are installed at the uppermost platform for use of alternative means, as defined in paragraph 3.9 of the MODU Technical provisions, for inspection at intermediate heights;	2.2 For pre-load tanks in self-elevating units, reference is made to 1.3.

MODU 1 (cont)

1 Water ballast tanks, except those specified in the right column, and other tanks	2 Water ballast tanks of less than 5 m width
Access to the underdeck and vertical structure	
.5 for MODUs having cross-ties which are 6 m or more above tank bottom, a transverse permanent means of access on the cross-ties providing inspection of the tie flaring brackets at both sides of the tank, with access from one of the longitudinal permanent means of access in .4; and	2.3 For ballast tanks in columns of column-stabilized units of which the vertical distance between each watertight flat or between horizontal stringers/non-tight flats is 6 m and over, one permanent means of access shall be provided for the full length of the tank in accordance with 2.1. (Note: In columns, longitudinal means the perimetral direction of the column and transversal means the radial direction of the column)
.6 alternative means as defined in paragraph 3.9 of the Technical provisions may be provided as an alternative to .4 for tanks other than ballast tanks of which the height is less than 17 m.	**For surface units (ship- or barge-type) and pontoons in column-stabilized units:** 2.4 For bilge hopper sections of which the vertical distance from the tank bottom to the upper knuckle point is 6 m and over, one longitudinal permanent means of access shall be provided for the full length of the tank. It shall be accessible by vertical permanent means of access at each end of the tank.
1.2 For tanks of which the height is less than 6 m, alternative means as defined in paragraph 3.9 of the Technical provisions or portable means may be utilized in lieu of the permanent means of access.	2.4.1 The longitudinal continuous permanent means of access may be installed at a minimum 1.6 m to maximum 3 m from the top of the bilge hopper section. In this case, a platform extending the longitudinal continuous permanent means of access in way of the webframe may be used to access the identified structural critical areas.
1.3 Pre-load tanks in self-elevating units are normally kept empty for a long duration when the unit is in elevated mode. For such tanks if due to their shape it is not practicable to fit permanent means of access mentioned in 1.1 above, the Administration may permit the provision of alternative means defined in paragraph 3.9 of the Technical provisions provided that the tank height is less than 17 m.	2.4.2 Alternatively, the continuous longitudinal permanent means of access may be installed at a minimum of 1.2 m below the top of the clear opening of the web ring allowing a use of portable means of access to reach identified structural critical areas.

MODU 1 (cont)

1 Water ballast tanks, except those specified in the right column, and other tanks	2 Water ballast tanks of less than 5 m width
Access to the underdeck and vertical structure	
1.4 For ballast tanks in columns of column-stabilized units, longitudinal means the perimetral direction of the column and transversal means the radial direction of the column.	2.5 Where the vertical distance referred to in 2.4 is less than 6 m, alternative means as defined in paragraph 3.9 of the Technical provisions or portable means of access may be utilised in lieu of the permanent means of access. To facilitate the operation of the alternative means of access, in-line openings in horizontal stringers shall be provided. The openings shall be of an adequate diameter and shall have suitable protective railings.
Fore and aft peak tanks in surface units 1.5 For fore and aft peak tanks with a depth of 6 m or more at the centre line of the collision and aft end bulkheads, a suitable means of access shall be provided for access to critical areas such as the underdeck structure, stringers, collision and aft end bulkheads and side shell structure.	
1.5.1 Stringers of less than 6 m in vertical distance from the deck head or a stringer immediately above are considered to provide suitable access in combination with portable means of access.	
1.5.2 In case the vertical distance between the deck head and stringers, stringers or the lowest stringer and the tank bottom is 6 m or more, alternative means of access as defined in paragraph 3.9 of the Technical provisions shall be provided.	

MODU 1 (cont)

3 Holds	4 Critical Structural Areas
Access to underdeck structure 3.1 For holds under main deck of which the height is 6 m and over, permanent means of access shall be fitted to provide access to the overhead structure at both sides of the cross deck and in the vicinity of the centreline. Each means of access shall be accessible from the hold access or directly from the main deck and installed at a minimum of 1.6 m to a maximum of 3 m below the deck.	4.1 Permanent means of access shall be fitted to provide access to overhead and vertical structures identified as critical structural areas as defined in 2009 MODU Code, paragraph 2.2.3.2 and located at a height of 6 m or more from the bottom of the space.
3.2 An athwartship permanent means of access fitted on the transverse bulkhead at a minimum 1.6 m to a maximum 3 m below the cross-deck head is accepted as equivalent to 3.1.	4.1.1 When permanent means of access to critical structural areas are not covered by sections 1, 2 and 3 above, continuous permanent access arranged at the bulkhead on the stiffened surface is to be provided at a maximum of 3 m below the critical structural area, but not higher than 1.6 m below the deck, throughout the extent of the critical structural area.
3.3 Access to the permanent means of access to overhead structure of the cross deck may also be via the uppermost stringer.	4.2 For critical structural areas located at a height of less than 6 m from the bottom of the space, alternative means of access as defined in paragraph 3.9 of the Technical provisions are to be provided.
3.4 Alternatively, movable means of access as defined in paragraph 3.9 of the MODU Technical provisions, may be utilized for access to the overhead structure of the cross deck if its vertical distance is 17 m or less above the bottom of the hold.	4.3 Suitable means of access into the interior of the horizontal braces in column stabilized units shall be provided. For access through vertical openings, the requirements of 3.11 of the Technical provisions shall be applied.

MODU 1 (cont)

Appendix 1 Unified Interpretation of IMO Resolution 133(76) as applicable for MODUs

Table 1 – Means of access, paragraph 1.1

1. Water ballast tanks, except those specified in the right column, and other tanks

Access to the underdeck and vertical structure

1.1 For tanks of which the height is 6 m and over containing internal structures, permanent means of access shall be provided in accordance with .1 to .6:

Interpretation

1. For tanks containing oil products other than crude oil (e.g. fuel oil, diesel oil, base oil) where lower corrosion is expected, section 1.1 of Table 1 is not to be applied. For tanks containing products considered corrosive (e.g. brine, drilling mud), section 1.1 is to be applied.

2. Sub-paragraphs .1, .2 and .3 define access to underdeck structure, access to the uppermost sections of transverse webs and connection between these structures.

3. Sub-paragraphs .4, .5 and .6 define access to vertical structures only and are linked to the presence of transverse webs on longitudinal bulkheads.

4. If there are no underdeck structures (deck longitudinals and deck transverses) but there are vertical structures in the tank supporting transverse and longitudinal bulkheads, access in accordance with sub-paragraphs from .1 through to .6 is to be provided for inspection of the upper parts of vertical structure on transverse and longitudinal bulkheads.

5. If there is no structure in the tank, section 1.1 of Table 1 is not to be applied.

6. The vertical distance below the overhead structure is to be measured from the underside of the main deck plating to the top of the platform of the means of access at a given location.

7. The height of the tank is to be measured at each tank. For a tank the height of which varies at different bays, item 1.1 is to be applied to such bays of a tank that have height 6 m and over.

Technical Background

Interpretation 7: If the height of the tank is increasing along the length of a unit, the permanent means of access is to be provided locally where the height is above 6 m.

Ref.

Paragraph 10 of the annex to MSC/Circ.686.

MODU 1 (cont)

Appendix 1 Unified Interpretation of IMO Resolution 133(76) as applicable for MODUs

Table 1 – Means of access, paragraph 1.1.2

1.1.2 at least one continuous longitudinal permanent means of access at each side of the tank. One of these accesses shall be at a minimum of 1.6 m to a maximum of 6 m below the deck head and the other shall be at a minimum of 1.6 m to a maximum of 3 m below the deck head;

Interpretation

There is need to provide continuous longitudinal permanent means of access when the deck longitudinals and deck transverses are fitted on deck but supporting brackets are fitted under the deck.

MODU 1 (cont)

Appendix 1 Unified Interpretation of IMO Resolution 133(76) as applicable for MODUs

Table 1 – Means of access, paragraph 1.1.3

1.1.3 access between the arrangements specified in .1 and .2 and from the main deck to either .1 or .2.

Interpretation

Means of access to tanks may be used for access to the permanent means of access for inspection.

Technical Background

As a matter of principle, in such a case where the means of access can be utilised for the purpose of accessing structural members for inspection there is no need of duplicated installation of the MA.

MODU 1 (cont)

Appendix 1 Unified Interpretation of IMO Resolution 133(76) as applicable for MODUs

Table 1 – Means of access, paragraph 1.1.4

1.1.4 continuous longitudinal permanent means of access which are integrated in the structural member on the stiffened surface of a longitudinal bulkhead, in alignment, where possible, with horizontal girders of transverse bulkheads are to be provided for access to the transverse webs unless permanent fittings are installed at the uppermost platform for use of alternative means as defined in paragraph 3.9 of the MODU Technical provisions for inspection at intermediate heights;

Interpretation

The permanent fittings required to serve alternative means of access such as wire lift platform, that are to be used by crew and surveyors for inspection shall provide at least an equal level of safety as the permanent means of access stated by the same paragraph. These means of access shall be carried on board the unit and be readily available for use without filling of water in the tank.

Therefore, rafting is not to be acceptable under this provision.

Alternative means of access are to be part of Access Manual which is to be approved on behalf of the flag State.

MODU 1 (cont)

Appendix 1 Unified Interpretation of IMO Resolution 133(76) as applicable for MODUs

Table 1 – Means of access paragraph 2.1

2. Water ballast tanks of less than 5 m width

Access to the underdeck and vertical structure

2.1 For water ballast tanks of less than 5 m width (including *double side spaces above the upper knuckle* point of the bilge hopper sections in surface units), permanent means of access are to be provided in accordance with .1 and .3:

Interpretation

Paragraph 2.1.1 represents requirements for access to underdeck structures, while paragraph 2.1.2 is a requirement for access for survey and inspection of vertical structures on longitudinal bulkheads (transverse webs).

Technical Background

MA or portable means of access are necessary arrangement to facilitate inspection of the structural condition of the space and the boundary structure.

MODU 1 (cont)

Appendix 1 Unified Interpretation of IMO Resolution 133(76) as applicable for MODUs

Table 1 – Means of access, paragraph 2.1.1

2. Water ballast tanks of less than 5 m width

2.1.1 where the vertical distance between horizontal uppermost stringer and deck head is 6 m or more, one continuous permanent means of access shall be provided for the full length of the tank with a means to allow passing through transverse webs installed a minimum of 1.6 m to a maximum of 3 m below the deck head with a vertical access ladder at each end of tank;

Interpretation

1. For a tank, the vertical distance between horizontal upper stringer and deck head of which varies at different sections, item 2.1.1 is to be applied to such sections that fall under the criteria.

2. The continuous permanent means of access may be a wide longitudinal, which provides access to critical details on the opposite side by means of platforms as necessary on web frames. In case the vertical opening of the web frame is located in way of the open part between the wide longitudinal and the longitudinal on the opposite side, platforms shall be provided on both sides of the web frames to allow safe passage through the web frame.

3. Where two access hatches are required by 2009 MODU Code, section 2.2.2.2, access ladders at each end of the tank are to lead to the deck.

Technical Background

Interpretation 1: The interpretation of varied tank height in item 1 of Table 1 is applied to the vertical distance between horizontal upper stringer and deck head for consistency.

MODU 1 (cont)

Appendix 1 Unified Interpretation of IMO Resolution 133(76) as applicable for MODUs

Table 1 – Means of access, paragraph 2.1.2

2.1.2 continuous longitudinal permanent means of access, which are integrated in the structure, at a vertical distance not exceeding 6 m apart; and

Interpretation

The continuous permanent means of access may be a wide longitudinal, which provides access to critical details on the opposite side by means of platforms as necessary on webframes. In case the vertical opening of the web is located in way of the open part between the wide longitudinal and the longitudinal on the opposite side, platforms shall be provided on both sides of the web to allow safe passage through the web.

A "reasonable deviation", as noted in MODU TP, paragraph 1.4, of not more than 10% may be applied where the permanent means of access is integral with the structure itself.

MODU 1 (cont)

Appendix 1 Unified Interpretation of IMO Resolution 133(76) as applicable for MODUs

Table 1 – Means of access, paragraph 2.2

For surface units (ship- or barge-type) and pontoons in column-stabilized units:

2.2 For bilge hopper sections of which the vertical distance from the tank bottom to the upper knuckle point is 6 m and over, one longitudinal permanent means of access shall be provided for the full length of the tank. It shall be accessible by vertical permanent means of access at both ends of the tank.

Interpretation

1. Permanent means of access between the longitudinal continuous permanent means of access and the bottom of the space is to be provided.

2. The height of a bilge hopper tank located outside of the parallel part of the unit is to be taken as the maximum of the clear vertical distance measured from the bottom plating to the hopper plating of the tank.

3. The foremost and aftmost bilge hopper ballast tanks with raised bottom, of which the height is 6 m and over, a combination of transverse and vertical MA for access to the upper knuckle point for each transverse web is to be accepted in place of the longitudinal permanent means of access.

Technical Background

Interpretation 2: The bilge hopper tanks at fore and aft of unit's hull narrow due to raised bottom plating and the actual vertical distance from the bottom of the tank to hopper plating of the tank is more appropriate to judge if a portable means of access could be utilized for the purpose.

Interpretation 3: in the foremost or aftmost bilge hopper tanks where the vertical distance is 6 m or over but installation of longitudinal permanent means of access is not practicable permanent means of access of combination of transverse and vertical ladders provides an alternative means of access to the upper knuckle point.

MODU 1 (cont)

Appendix 1 Unified Interpretation of IMO Resolution 133(76) as applicable for MODUs

Table 1 – Means of access, paragraph 3.1

3.1 Holds

Access to underdeck structure

3.1 For holds under main deck of which the height is 6 m or over, permanent means of access shall be fitted to provide access to the overhead structure at both sides of the cross deck and in the vicinity of the centreline. Each means of access shall be accessible from the hold access or directly from the main deck and installed at a minimum of 1.6 m to a maximum of 3 m below the deck.

Interpretation

1. Means of access shall be provided to the crossdeck structures of the foremost and aftermost part of the each hold.

2. Interconnected means of access under the cross deck for access to three locations at both sides and in the vicinity of the centreline is to be acceptable as the three means of access.

3. Permanent means of access fitted at three separate locations accessible independently, one at each side and one in the vicinity of the centreline is to be acceptable.

4. Special attention is to be paid to the structural strength where any access opening is provided in the main deck or cross deck.

Technical Background

Pragmatic arrangements of the MA are provided.

MODU 1 (cont)

Appendix 1 Unified Interpretation of IMO Resolution 133(76) as applicable for MODUs

Table 1 – Means of access, paragraph 3.3

3.3 Access to the permanent means of access to overhead structure of the cross deck may also be via the uppermost stringer.

Interpretation

Particular attention is to be paid to preserve the structural strength in way of access opening provided in the main deck or cross deck.

MODU 1 (cont)

Appendix 1 Unified Interpretation of IMO Resolution 133(76) as applicable for MODUs

Table 1 – Means of access, paragraph 3.4

3.4 Alternatively, movable means of access as defined in paragraph 3.9 of the MODU Technical provisions may be utilized for access to the overhead structure of cross deck if its vertical distance is 17 m or less above the bottom of the hold.

Interpretation

The movable means of access to the underdeck structure of cross deck need not necessarily be carried on board the unit. It is sufficient if it is made available when needed.

End of Document

gost.e-ecolog.ru