No.76 IACS Guidelines for Surveys, Assessment and Repair of Hull Structure – Bulk Carriers

(1994)
(Rev.1
July 2001)
(Rev.2
June 2004)
(Corr.1
Sept 2007)

gost.e-ecolog.ru

IACS

INTERNATIONAL ASSOCIATION
OF CLASSIFICATION SOCIETIES



BULK CARRIERS

Guidelines for Surveys, Assessment and Repair of Hull Structure

Copyright
© IACS - the International Association of Classification Societies and the International Association of Classification Societies Limited.

All rights reserved.

Except as permitted under current English legislation no part of this work may be photocopied, stored in a retrieval system, published, performed in public, adapted, broadcast, transmitted, recorded or reproduced in any form or by means, without prior permission of the copyright owner.

Where IACS has granted written permission for any part of this publication to be quoted such quotation must include acknowledgement to IACS.

Enquiries should be addressed to the Permanent Secretary:

International Association of Classification Societies Ltd,
36 Broadway,
London, SW1H 0BH
Telephone: 020 7976 0660
Fax: 020 7808 1100
Email: gost.e-ecolog.ru

With regard to information published on this website and where the copyright resides with IACS and IACS Ltd., permission is hereby granted for use, as above.

Terms and Conditions
The International Association of Classification Societies (IACS), its Member Societies and IACS Ltd. and their directors, officers, members, employees and agents (on behalf of whom this notice is issued) shall be under no liability or responsibility in contract or negligence or otherwise howsoever to any person in respect of any information or advice expressly or impliedly given in this document, or in respect of any inaccuracy herein or omission herefrom or in respect of any act or omission which has caused or contributed to this document being issued with the information or advice it contains (if any).
Without derogating from the generality of the foregoing, neither the International Association of Classification Societies (IACS) nor IACS Ltd. nor its Member Societies nor their directors, officers, members, employees or agents shall be liable in contract or negligence or otherwise howsoever for any direct, indirect or consequential loss to any person caused by or arising from any information, advice, inaccuracy or omission given or contained herein or any act or omission causing or contributing to any such information, advice, inaccuracy or omission given or contained herein.

Any dispute concerning the provision of material herein is subject to the exclusive jurisdiction of the English courts and will be governed by English Law.

Contents

1 Introduction

2 Class survey requirements
2.1 General
2.2 Annual Surveys
2.3 Intermediate Surveys
2.4 Special Surveys
2.5 Bottom surveys
2.6 Damage and repair surveys

3 Technical background for surveys
3.1 General
3.2 Definitions
3.3 Structural damages and deterioration
3.4 Structural detail failures and repairs
3.5 IACS Early Warning Scheme (EWS) for reporting of significant damage

4 Survey planning, preparation and execution
4.1 General
4.2 Survey Programme
4.3 Principles for Planning Document
4.4 Conditions for survey
4.5 Access arrangement and safety
4.6 Personal equipment
4.7 Thickness measurement and fracture detection
4.8 Survey at sea or at anchorage
4.9 Documentation on board

5 Structural detail failures and repairs
5.1 General
5.2 Catalogue of structural detail failures and repairs

Part 1 Cargo hold region
- Area 1 Deck structure
- Area 2 Topside tank structure
- Area 3 Side structure
- Area 4 Transverse bulkheads including stool structure
- Area 5 Double bottom including hopper tank structure

Part 2 Fore and aft end regions
- Area 1 Fore end structure
- Area 2 Aft end structure
- Area 3 Stern frame, rudder arrangement and propeller shaft support

Part 3 Machinery and accommodation spaces
Area 1 Engine room structure
Area 2 Accommodation structure

1 Introduction

The International Association of Classification Societies (IACS) is introducing a series of manuals with the intention of giving guidelines to assist the surveyors of IACS Member Societies, and other interested parties involved in the survey, assessment and repair of hull structures for certain ship types.

This manual gives guidelines for a bulk carrier type ship which is constructed with a single deck, single skin, double bottom, hopper side tanks and topside tanks in cargo spaces, and is intended primarily to carry dry cargo, including ore, in bulk. **Figure 1** shows the general view of a typical single skin bulk carrier with 9 cargo holds.

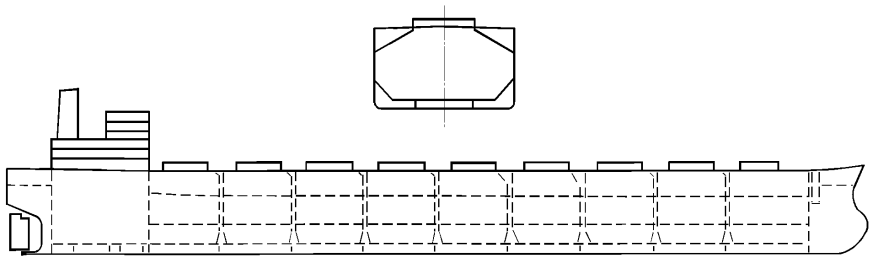

Figure 1 General view of a typical single skin bulk carrier

The guidelines focus on the IACS Member Societies' survey procedures but may also be useful in connection with inspection/examination schemes of other regulatory bodies, owners and operators.

The manual includes a review of survey preparation guidelines, which cover the safety aspects related to the performance of the survey, the necessary access facilities, and the preparation necessary before the surveys can be carried out.

The survey guidelines encompass the different main structural areas of the hull where damages have been recorded, focusing on the main features of the structural items of each area.

An important feature of the manual is the inclusion of the section which illustrates examples of structural deterioration and damages related to each structural area and gives what to look for, possible cause, and recommended repair methods, when considered appropriate.

The "IACS Early Warning Scheme (EWS)", with the emphasis on the proper reporting of significant hull damages by the respective Classification Societies, will enable the analysis of problems as they arise, including revisions of these Guidelines.

This manual has been developed using the best information currently available. It is intended only as guidance in support of the sound judgment of

surveyors, and is to be used at the surveyors' discretion. It is recognized that alternative and satisfactory methods are already applied by surveyors. Should there be any doubt with regard to interpretation or validity in connection with particular applications, clarification should be obtained from the Classification Society concerned.

Figure 2 shows a typical cargo hold structural arrangement in way of cargo hold region.

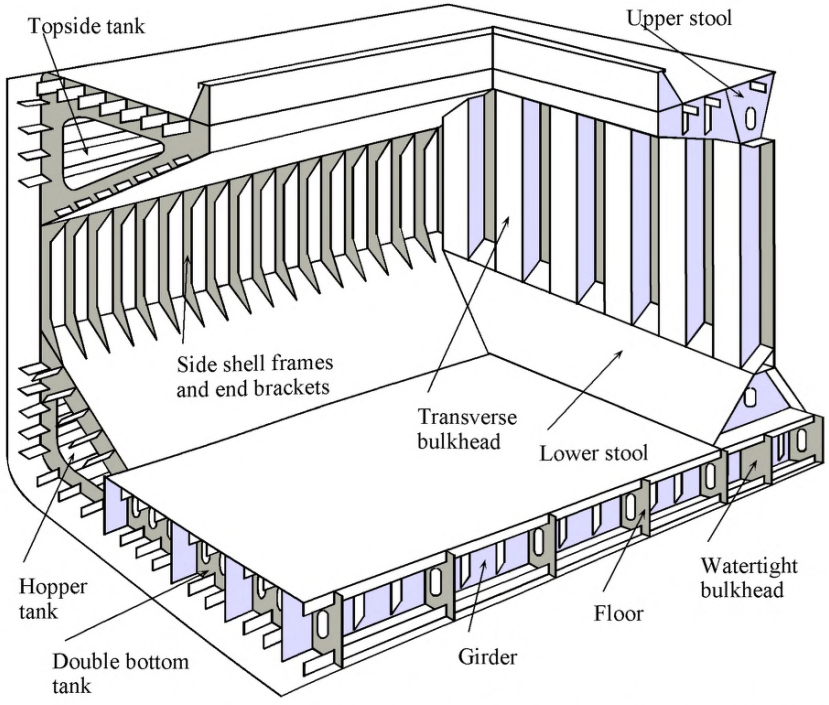

Figure 2 Typical cargo hold configuration for a single skin bulk carrier

2 Class survey requirements

2.1 General

2.1.1 The programme of periodical surveys is of prime importance as a means for assessment of the structural condition of the hull, in particular, the structure of cargo holds and adjacent tanks. The programme consists of Special (or Renewal) Surveys carried out at five-year interval with Annual and Intermediate Surveys carried out in between Special Surveys.

2.1.2 Since 1991, it has been a requirement for new bulk carriers to apply a protective coating to the structure in water ballast tanks which form part of the hull boundary, and, since 1993, to part of the side shell and transverse watertight bulkheads structures in way of the cargo holds.

2.1.3 The International Maritime Organization (IMO), in 1997 SOLAS Conference, adopted structural survivability standards for new and existing bulk carriers carrying the high density cargoes. All new single side skin bulk carriers, defined as ships built on or after 1st July 1999, are required to have sufficient strength to withstand the flooding of any one cargo hold taking dynamic effects into account. All existing single side skin bulk carriers, defined as ships built before 1 July 1999, must comply with the relevant IACS criteria for assessing the vertically corrugated transverse watertight bulkhead between the first two cargo holds and the double bottom in way of the first cargo hold with the first cargo hold assumed flooded. The relevant IMO adopted standards, IACS UR S19 and S22 for existing ships, and recommended standards, IACS UR S17, S18 and S20 for new ships, and the extent of possible repairs and/or reinforcements of vertically corrugated transverse watertight bulkheads on existing bulk carriers are freely available at IACS web site

gost.e-ecolog.ru

2.1.4 From 1 July 2001, bulk carriers of 20,000 DWT and above, to which the Enhanced Survey Programme (ESP) requirements apply, starting with the 3rd Special Survey, all Special and Intermediate hull classification surveys are to be carried out by at least two exclusive surveyors. Further, one exclusive surveyor is to be on board while thickness measurements are taken to the extent necessary to control the measurement process.

2.1.5 The detailed survey requirements complying with ESP are specified in the Rules and Regulations of each IACS Member Society.

2.1.6 The ESP is based on two principal criteria: the condition of the coating and the extent of structural corrosion. Of primary importance is when a coating has been found to be in a "poor" condition (more than 20% breakdown of the coating or the formation of hard scale in 10 % more of the area) or when a structure has been found to be *substantially* corroded (i.e. a wastage between 75 % and 100 % of the allowable diminution for the structural member in question.).

2.2 Annual Surveys

2.2.1 The purpose of an Annual Survey is to confirm that the general condition of the hull is maintained at a satisfactory level.

2.2.2 As the ship ages, cargo holds are required to be subjected to more extensive overall and close-up examinations at Annual Surveys.

2.2.3 In addition, overall and close-up examinations may be required for ballast tanks as a consequence of either the coating deteriorating to a *poor* condition or the structure being found to be *substantially* corroded at previous Intermediate or Special Surveys.

2.3 Intermediate Surveys

2.3.1 The Intermediate Survey replaces the second or third Annual Survey in each five year Special Survey cycle and requires that, in addition to the Annual Survey requirements, extended overall and close-up examinations including thickness measurements of cargo holds and ballast tanks used primarily for salt water ballast, are carried out.

2.3.2 The survey also includes re-examination and thickness measurements of any suspect areas which have substantially corroded or are known to be prone to rapid wastage.

2.3.3 Areas in ballast tanks and cargo holds found suspect at the previous Special Survey are subject to overall and close-up surveys, the extent of which becomes progressively more extensive commensurate with the age of the vessel.

2.3.4 As of 1 July 2001, for bulk carriers exceeding 15 years of age, the requirements of the Intermediate Survey are to be of the same extent as the previous Special Survey, except for pressure testing of cargo/ballast holds and ballast tanks which is not required unless deemed necessary by the attending surveyor.

2.4 Special Surveys

2.4.1 The Special (or Renewal) Surveys of the hull structure are carried out at five-year intervals for the purpose of establishing the condition of the structure to confirm that the structural integrity is satisfactory in accordance with the Classification Requirements, and will remain fit for its intended purpose for another five-year period, subject to proper maintenance and operation of the ship and to periodical surveys carried out at the due dates.

2.4.2 The Special Survey concentrates on close-up examination in association with thickness determination and is aimed at detecting fractures, buckling, *substantial* corrosion and other types of structural deterioration.

2.4.3 Thickness measurements are to be carried out upon agreement with the

Classification Society concerned in conjunction with the Special Survey. The Special Survey may be commenced at the 4th Annual Survey and be progressed with a view to completion by the 5th anniversary date.

2.4.4 Deteriorated protective coating in salt water ballast spaces and structural areas showing substantial corrosion and/or considered by the surveyor to be prone to rapid wastage will be recorded for particular attention during the following survey cycle, if not repaired at the survey.

2.5 Drydocking (Bottom) Surveys

2.5.1 A **Drydocking Survey** is required in conjunction with the **Special Survey** to examine the external underwater part of the ship and related items. Two Bottom surveys are required to be carried out during the five year period of validity of SOLAS Cargo Ship Safety Construction (SC) Certificate, and the maximum interval between any two successive Bottom Survey is not to exceed three years.

2.5.2 From 1 July 2002, for bulk carriers of 15 years of age and over, inspection of the outside of the ship's bottom is to be carried out with the ship in dry dock. For bulk carriers less than 15 years of age, alternative inspections of the ship's bottom not conducted in conjunction with the Special Survey may be carried out with the ship afloat. Inspection of the ship afloat is only to be carried out when the conditions are satisfactorily and the proper equipment and suitably qualified staff are available.

2.6 Damage and repair surveys

2.6.1 Damage surveys are occasional surveys which are, in general, outside the programme of periodical hull surveys and are requested as a result of hull damage or other defects. It is the responsibility of the owner or owner's representative to inform the Classification Society concerned when such damage or defect could impair the structural capability or watertight integrity of the hull. The damages should be inspected and assessed by the Society's surveyors and the relevant repairs, if needed, are to be performed. In certain cases, depending on the extent, type and location of the damage, permanent repairs may be deferred to coincide with the planned periodical survey.

Any damage in association with wastage over the allowable limits (including buckling, grooving, detachment or fracture), or extensive areas of wastage over the allowable limits, which affects or, in the opinion of the surveyor, will affect the vessel's structural watertight or weathertight integrity, is to be promptly and thoroughly repaired. Areas to be considered to are to include:
Side shell frames, their end attachments and adjacent shell plating, deck structure and deck plating, watertight bulkheads, and hatch covers and coamings.

2.6.2 In cases of repairs intended to be carried out by riding crew during voyage, the complete procedure of the repair, including all necessary surveys, is to be submitted to and agreed upon by the Classification Society reasonably in advance.

2.6.3 IACS Unified Requirement Z 13 "Voyage Repairs and Maintenance" provides useful guidance for repairs to be carried out by a riding crew during a voyage.

2.6.4 For locations of survey where adequate repair facilities are not available, consideration may be given to allow the vessel to proceed directly to a repair facility. This may require discharging the cargo and/or temporary repairs for the intended voyage. A suitable condition of class will be imposed when temporary measures are accepted.

3 Technical background for surveys

3.1 General

3.1.1 The purpose of carrying out the periodical hull surveys is to detect possible structural defects and damages and to establish the extent of any deterioration. To help achieve this and to identify key locations on the hull structure that might warrant special attention, knowledge of any historical problems of the particular ship or other ships of a similar class is to be considered if available. In addition to the periodical surveys, occasional surveys of damages and repairs are carried out. Records of typical occurrences and chosen solutions should be available in the ship's history file.

3.2 Definitions

3.2.1 For clarity of definition and reporting of survey data, it is recommended that standard nomenclature for structural elements be adopted. Typical sections in way of cargo holds are illustrated in **Figures 3 (a)** and **(b)**. These figures show the generally accepted nomenclature.

The terms used in these guidelines are defined as follows.

(a) Ballast Tank is a tank which is used primarily for salt water ballast.

(b) Spaces are separate compartments including holds and tanks.

(c) Overall examination is an examination intended to report on the overall condition of the hull structure and determine the extent of additional close-up examinations.

(d) Close-up examination is an examination where the details of structural components are within the close visual examination range of the surveyors, i.e. normally within reach of hand.

(e) Transverse Section includes all longitudinal members such as plating, longitudinals and girders at the deck, side, bottom and inner bottom, hopper side tanks and top wing tanks.

(f) Representative Spaces are those which are expected to reflect the condition of other spaces of similar type and service and with similar corrosion protection systems. When selecting representative spaces, account should be taken of the service and repair history on board.

(g) Suspect Areas are locations showing Substantial Corrosion and/or are considered by the surveyor to be prone to rapid material wastage.

(h) Substantial Corrosion is an extent of corrosion such that assessment of corrosion pattern indicates a material wastage in excess of 75 per cent of allowable margins, but within acceptable limits.

(i) Coating Condition is defined as follows:

Good – condition with only minor spot rusting.

Fair – condition with local breakdown at edges of stiffeners and weld connections and/or light rusting over 20 per cent or more of areas under consideration, but less than as defined for Poor condition.

Poor – condition with general breakdown of coating over 20 per cent or more of areas or hard scale at 10 per cent or more of

areas under consideration.

(j) Transition Region is a region where discontinuity in longitudinal structure occurs, e.g. at forward bulkhead of engine room and collision bulkhead.

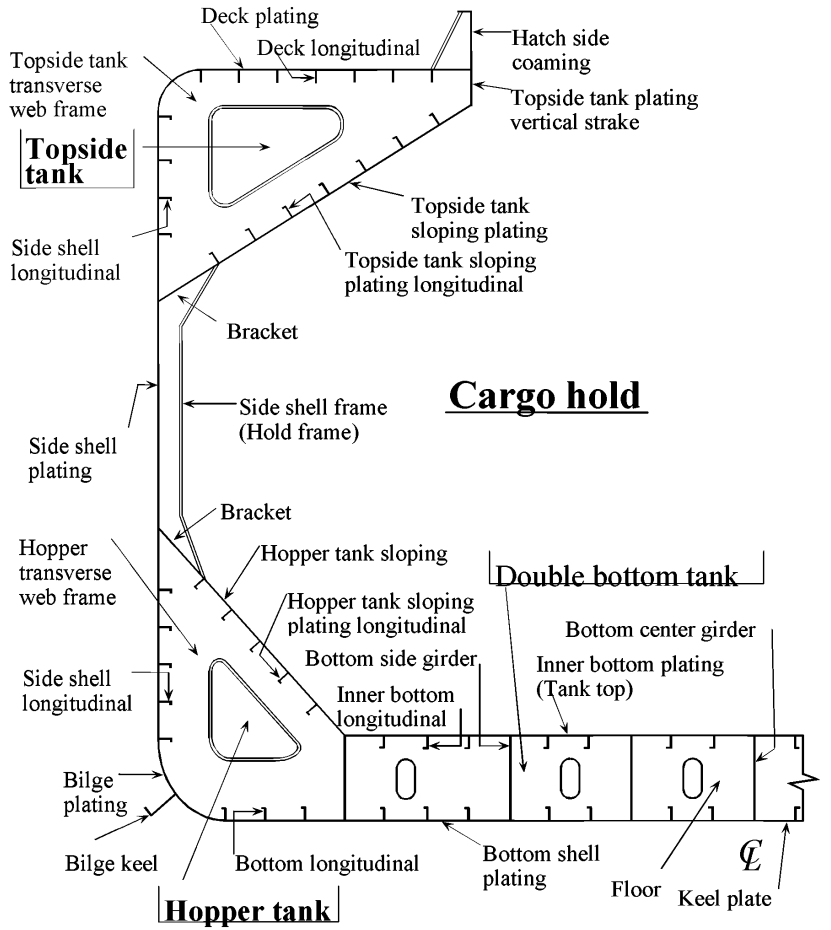

Figure 3 (a) Nomenclature for typical transverse section in way of cargo hold

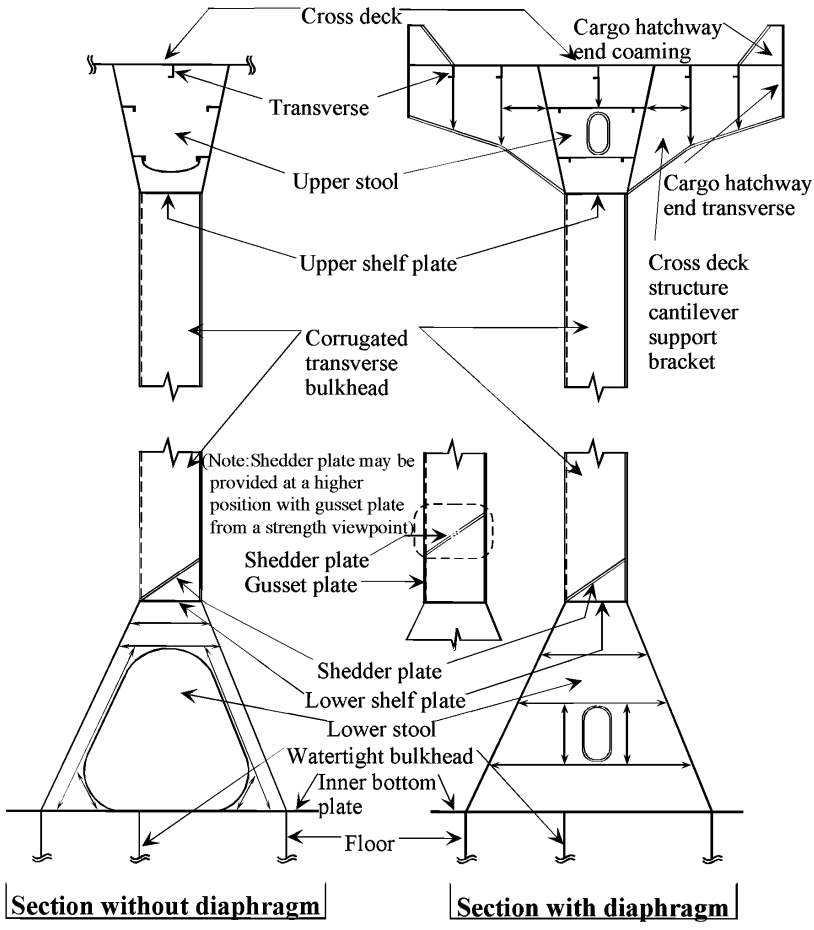

Figure 3 (b) Nomenclature for typical watertight bulkhead

3.3 Structural damages and deterioration

3.3.1 General

In the context of this manual, structural damages and deterioration imply deficiencies caused by:

- excessive corrosion
- design faults
- material defects or bad workmanship
- navigation in extreme weather conditions
- loading and unloading operations, water ballast exchange at sea
- wear and tear
- contact (with quay side, ice, touching underwater objects, etc.)

but not as a direct consequence of accidents such as collisions,

groundings and fire/explosions.
Deficiencies are normally recognized as:
- material wastage
- fractures
- deformations
The various types of deficiencies and where they may occur are discussed in more detail as follows:

3.3.2 Material wastage

In addition to being familiar with typical structural defects likely to be encountered during a survey, it is necessary to be aware of the various forms and possible location of corrosion that may occur to the structural members on decks, in holds, and in tanks.

General corrosion appears as a non-protective, friable rust which can occur uniformly on hold or tank internal surfaces that are uncoated. The rust scale continually breaks off, exposing fresh metal to corrosive attack. Thickness loss cannot usually be judged visually until excessive loss has occurred. Failure to remove mill scale during construction of the ship can accelerate corrosion experienced in service. Severe general corrosion in all types of ships, usually characterized by heavy scale accumulation, can lead to extensive steel renewals.

Grooving corrosion is often found in or beside welds, especially in the heat affected zone. The corrosion is caused by the galvanic current generated from the difference of the metallographic structure between the heat affected zone and base metal. Coating of the welds is generally less effective compared to other areas due to roughness of the surface which exacerbates the corrosion. Grooving corrosion may lead to stress concentrations and further accelerate the corrosion process. Grooving corrosion may be found in the base material where coating has been scratched or the metal itself has been mechanically damaged.

Pitting corrosion is often found in the bottom plating or in horizontal surfaces, such as face plates, in ballast tanks and is normally initiated due to local breakdown of coating. Once pitting corrosion starts, it is exacerbated by the galvanic current between the pit and other metal.

Erosion which is caused by the wearing effect of flowing liquid and abrasion which is caused by mechanical actions may also be responsible for material wastage.

3.3.3 Fractures

In most cases fractures are found at locations where stress concentration occurs. Weld defects, flaws, and where lifting fittings used during ship construction are not properly removed are often areas where fractures are found. If fractures occur under repeated stresses which are below the yielding stress, the fractures are called fatigue fractures. In addition to the cyclic stresses induced by wave forces, fatigue fractures can also result from vibration forces introduced by main engine(s) or propeller(s), especially in the afterward part of the

hull.

Fractures may not be readily visible due to lack of cleanliness, difficulty of access, poor lighting or compression of the fracture surfaces at the time of inspection. It is therefore important to identify, clean, and closely inspect potential problem areas. If the initiation points of a fracture is not apparent, the structure on the other side of the plating should be examined.

Fracture initiating at latent defects in welds more commonly appears at the beginning or end of a run of welds, or rounding corners at the end of a stiffener, or at an intersection. Special attention should be paid to welds at toes of brackets, at cut-outs, and at intersections of welds. Fractures may also be initiated by undercutting the weld in way of stress concentrations. Although now less common, intermittent welding may cause problems because of the introduction of stress concentrations at the ends of each length of weld.

It should be noted that fractures, particularly fatigue fractures due to repeated stresses, may lead to serious damages, e.g. a fatigue fracture in a frame may propagate into shell plating and affect the watertight integrity of the hull. In extreme weather conditions the shell fracture could extend further resulting in the loss of part of the shell plating and consequent flooding of cargo hold.

3.3.4 Deformations

Deformation of structure is caused by in-plane load, out-of-plane load or combined loads. Such deformation is often identified as local deformation, i.e. deformation of panel or stiffener, or global deformation, i.e. deformation of beam, frame, girder or floor, including associated plating.

If in the process of the deformation large deformation is caused due to small increase of the load, the process is called buckling.

Deformations are often caused by impact loads/contact and inadvertent overloading. Damages due to bottom slamming and wave impact forces are, in general, found in the forward part of the hull, although stern seas (pooping) have resulted in damages in way of the after part of the hull.

In the case of damages due to contact with other objects, special attention should be drawn to the fact that although damages to the shell plating may look small from the outboard side, in many cases the internal members are heavily damaged.

Permanent buckling may arise as a result of overloading, overall reduction in thickness due to corrosion, or contact damage. Elastic buckling will not normally be directly obvious but may be detected by evidence of coating damage, stress lines or shedding of scale. Buckling damages are often found in webs of web frames or floors. In many cases, this may be attributed to corrosion of webs/floors, wide stiffener spacing or wrongly positioned lightening holes, man-holes or slots in

webs/floors.

Finally, it should be noted that inadvertent overloading may cause significant damages. In general, however, major causes of damages are associated with excessive corrosion and contact damage.

3.4 Structural detail failures and repairs

3.4.1 For examples of structural defects which have occurred in service, attention is drawn to **Section 5** of these guidelines. It is suggested that surveyors and inspectors should be familiar with the contents of **Section 5** before undertaking a survey.

3.4.2 Any damage to or excessive wastage of the following structures that are considered affecting the ship's Classification is to be promptly and thoroughly repaired:

(a) Side shell frames, their end attachments and adjacent shell plating
(b) Deck structure and deck plating between hatches
(c) Watertight bulkheads
(d) Hatch covers and coamings

3.4.3 In general, where part of the structure has deteriorated to the permissible minimum thickness, then the affected area is to be cropped and renewed. Doubler plates must not be used for the compensation of wasted plate. Repair work in tanks requires careful planning in terms of accessibility.

3.4.4 If replacement of defective parts must be postponed, the following temporary measures may be acceptable at the surveyor's discretion:

(a) The affected area may be sandblasted and painted in order to reduce corrosion rate.
(b) Doubler may be applied over the affected area. Special consideration should be given to areas buckled under compression.
(c) Stronger members may support weakened stiffeners by applying temporarily connecting elements.
(d) Cement box may be applied over the affected area.

A suitable condition of class should be imposed when temporary measures are accepted.

3.5 IACS Early Warning Scheme (EWS) for reporting of significant hull damage

3.5.1 IACS has organised and set up a system to permit the collection, and dissemination amongst Member Societies of information (while excluding a ship's identity) on significant hull damages.

3.5.2 The principal purpose of the IACS Early Warning Scheme is to enable a Classification Society with experience of a specific damage to make this information available to the other societies so that action can be implemented to avoid repetition of damage to hulls where similar structural arrangements are employed.

3.5.3 These guidelines incorporated the experience gained from IACS EWS Scheme.

4 Survey planning, preparation and execution

4.1 General

4.1.1 The owner should be aware of the scope of the coming survey and instruct those who are responsible, such as the master or the superintendent, to prepare necessary arrangements. If there is any doubt, the Classification Society concerned should be consulted.

4.1.2 Survey execution will naturally be heavily influenced by the type of survey to be carried out. The scope of survey will have to be determined prior to the execution.

4.1.3 The surveyor should study the ship's structural arrangements and review the ship's operation and survey history and those of sister ships where possible, to identify any known potential problem areas particular to the type of ships. Sketches of typical structural elements should be prepared in advance so that any defects and/or ultrasonic thickness measurements can be recorded rapidly and accurately.

4.2 Survey Programme

4.2.1 It is mandatory that a specific Survey Programme be worked out in advance of the Special Survey by the owner in cooperation with the Classification Society.

4.2.2 The Survey Programme should account for and comply with the requirements for close-up examinations, thickness measurements and tank testing, and take into consideration the conditions for survey, access to structures and equipment for survey.

4.2.3 The close-up survey and thickness measurement in this Survey Programme may be augmented by a Planning Document as described in **4.3** and which should be agreed with the relevant Classification Society.

4.2.4 The Survey Programme should take into account the information included in the documentation on board, as described in **4.9**.

4.2.5 In developing the Survey Program, the Classification Society will advise the Owner of the maximum acceptable structural corrosion diminution levels applicable to the vessel.

4.3 Principle for Planning Document

4.3.1 A Planning Document is intended to identify critical structural areas and to stipulate the extent and locations for close-up survey and thickness measurements with respect to sections and internal structures as well as nominated suspect areas. Minimum requirements regarding close-up surveys and thickness measurements are stipulated in IACS Unified Requirement Z10.2.

4.3.2 The planning Document is to be worked out by the owner in cooperation

with the relevant Classification Society well in advance of the survey.

4.3.3 The basis for nomination of spaces and areas in **4.3.1** above is a technical assessment and consideration of possible deterioration where the following elements on the particular ship are taken into account:
(a) Design features such as extent of high tensile steel and local details;
(b) Former history available at owner's and the relevant Classification Society's offices with respect to material wastage, fractures, deformations and repairs for the particular ship as well as similar vessels.
(c) Information from same offices with respect to type of cargo, use of different spaces for cargo/ballast, protection of spaces and condition of coating, if any.

4.3.4 The Planning Document is to contain relevant information pertaining to at least the following information:
(a) Main particulars
(b) Main structural plans (scantling drawings), including information regarding use of high tensile steels
(c) Plan of tanks/holds
(d) List of tanks/holds with information on use, protection and condition of coating
(e) Conditions for survey (e.g. information regarding hold and tank cleaning, gas freeing, ventilation, lighting, etc)
(f) Provisions and methods for access
(g) Equipment for surveys
(h) Corrosion risk nomination of holds and tanks
(i) Design related damages on the particular ship, and similar vessels, where available.
(j) Selected holds and tanks and areas for close-up survey
(k) Selected sections for thickness measurements
(l) Acceptable corrosion allowance
(m) Damage experience related to the ship in question

4.4 Conditions for survey

4.4.1 The owner is to provide the necessary facilities for a safe execution of the survey.

4.4.2 Tanks and spaces are to be safe for access, i.e. gas freed (marine chemist certificate), ventilated, illuminated, etc.

4.4.3 Tanks and spaces are to be sufficiently clean and free from water, scale, dirt, oil residues, etc. and sufficient illumination is to be provided, to reveal corrosion, deformation, fractures, damages or other structural deterioration. In particular this applies to areas which are subject to thickness measurement.

4.5 Access arrangement and safety

4.5.1 In accordance with the intended survey, measures are to be provided to enable the hull structure to be examined and thickness measurement carried out in a safe and practical way.

4.5.2 For close-up surveys in a cargo hold and salt water ballast tanks, one or more of the following means for access, acceptable to the Surveyor, are to be provided:

a) permanent staging and passages through structures;
b) temporary staging, e.g. ladders and passages through structures;
c) lifts and movable platforms; and
d) other equivalent means.

4.5.3 In addition, particular attention should be given to the following guidance:

(a) Prior to entering tanks and other closed spaces, e.g. chain lockers, void spaces, it is necessary to ensure that the oxygen content is to be tested and confirmed as safe. A responsible member of the crew should remain at the entrance to the space and if possible communication links should be established with both the bridge and engine room. Adequate lighting should be provided in addition to a hand held torch (flashlight).

(b) In tanks where the structure has been coated and recently deballasted, a thin slippery film may often remain on the surfaces. Care should be taken when inspecting such spaces.

(c) The removal of scale may be extremely difficult. The removal of scale by hammering may cause sheet scale to fall, and in cargo holds this may result in residues of cargo falling from above. When using a chipping or scaling hammer care should be taken to protect eyes, and where possible safety glasses should be worn.
If the structure is heavily scaled then it may be necessary to request de-scaling before conducting a satisfactory visual examination.

(d) Owners or their representatives have been known to request that a survey be carried out from the top of the cargo during discharging operations. For safety reason, surveys must not ~~to~~ be carried out during discharging operations in the hold.

(e) In bulk carriers fitted with vertical ballast trunks connecting the topside and lower hopper tanks, the trunks and associated hull structure are normally surveyed in conjunction with the tanks. Space within the trucks is very limited and access is by ladder or individual rungs which can become heavily corroded and in some cases detached or missing. Care needs to be taken when descending these trunks.

(f) When entering a cargo hold or tank the bulkhead vertical ladders should be examined prior to descending to ensure that they are in good condition and rungs are not missing or loose. If holds are being entered when the hatch covers are in the closed position, then adequate lighting should be arranged in the holds. One person at a

time should descend or ascend the ladder.

(g) Sloping ("Australian Style") bulkhead ladders are prone to cargo handling damage and it is not uncommon to find platforms and ladders in poor condition with rails and stanchions missing or loose.

(h) If a portable ladder is used for survey purposes, the ladder should be in good condition and fitted with adjustable feet, to prevent it from slipping. Two crew members should be in attendance in order that the base of the ladder is adequately supported during use. The remains of cargo, in particular fine dust, on the tank top should be brushed away as this can increase the possibility of the ladder feet slipping.

(i) If an extending/articulated ladder (frame walk) is used to enable the examination of upper portions of cargo hold structure, the ladder should incorporate a hydraulic locking system and a built in safety harness. Regular maintenance and inspection of the ladder should be confirmed prior to its use.

(j) If a hydraulic arm vehicles ("Cherry Picker") is used to enable the examination of the upper parts of the cargo hold structure, the vehicle should be operated by qualified personnel and there should be evidence that the vehicle has been properly maintained. The standing platform should be fitted with a safety harness. For those vehicles equipped with a self leveling platform, care should be taken that the locking device is engaged after completion of maneuvering to ensure that the platform is fixed.

(k) Staging is the most common means of access provided especially where repairs or renewals are being carried out. It should always be correctly supported and fitted with handrails. Planks should be free from splits and lashed down. Staging erected hastily by inexperienced personnel should be avoided. In topside and lower hopper tanks it may be necessary to arrange staging to provide close-up examination of the upper parts of the tank particularly the transverse web frames, especially where protective coatings have broken down or have not been applied.

(l) In double bottom tanks there will often be a build up of mud on the bottom of the tank and this should be removed, in particular in way of tank boundaries, suction and sounding pipes, to enable a clear assessment of the structural condition.

4.6 Personal equipment

4.6.1 The following protective clothing and equipment to be worn as applicable during the surveys:

(a) Working clothes: Working clothes should be of a low flammability type and be easily visible.

(b) Head protection: Hard hat (metal hats are not allowed) shall always be worn outside office building/unit accommodations.

(c) Hand and arm protection: Various types of gloves are available for use, and these should be used during all types of surveys. Rubber/plastic gloves may be necessary when working in cargo holds.

(d) Foot protection: Safety shoes or boots with steel toe caps and non slip soles shall always be worn outside office buildings/unit accommodations. Special footwear may be necessary on slippery surfaces or in areas with chemical residues.
(e) Ear protection: Ear muffs or ear plugs are available and should be used when working in noisy areas. As a general rule, you need ear protection if you have to shout to make yourself understood by someone standing close to you.
(f) Eye protection: Goggles should always be used when there is danger of getting solid particles or dust into the eyes. Protection against welding arc flashes and ultraviolet light should also be considered.
(g) Breathing protection: Dust masks shall be used for protection against the breathing of harmful dusts, paint spraying and sand blasting. Gas masks and filters should be used by personnel working for short periods in an atmosphere polluted by gases or vapour.
(Self-contained breathing apparatus: Surveyors shall not enter spaces where such equipment is necessary due to unsafe atmosphere. Only those who are specially trained and familiar with such equipment should use it and only in case of emergency).
(h) Lifejacket: Recommended used when embarking/disembarking ships offshore, from/to pilot boat.

4.6.2 The following survey equipment is to be used as applicable during the surveys:
(a) Torches: Torches (Flashlights) approved by a competent authority for use in a flammable atmosphere shall be used in gas dangerous areas. High intensity beam type is recommended for in-tank inspections. Torches are recommended to be fitted with suitable straps so that both hands may be free.
(b) Hammer: In addition to its normal purposes the hammer is recommended for use during surveys inside units, tanks etc. as it may be most useful for the purpose of giving distress signal in case of emergency.
(c) Oxygen analyser/Multigas detector: For verification of acceptable atmosphere prior to tank entry, pocket size instruments which give audible alarm when unacceptable limits are reached are recommended. Such equipment shall have been approved by national authorities.
(d) Safety belts and lines: Safety belts and lines should be worn where high risk of falling down from more than 3 meters is present.
(e) Radiation meter: For the purpose of detection of ionizing radiation (X or gamma rays) caused by radiographic examination, radiation meter of the type which gives audible alarm upon detection of radiation is recommended.

4.7 Thickness measurement and fracture detection

4.7.1 Thickness measurement is to comply with the requirements of the Classification Society concerned. Thickness measurement should be

carried out at points that adequately represent the nature and extent of any corrosion or wastage of the respective structure (plate, web, etc.)

4.7.2 Thickness measurement is normally carried out by means of ultrasonic test equipment. The accuracy of the equipment is to be proven as required.

4.7.3 The required thickness measurements, if not carried out by the class society itself, are to be carried out by a qualified company certified by the relevant classification society, and are to be witnessed by a surveyor on board to the extent necessary to control the process. The report is to be verified by the surveyor in charge.

4.7.4 The thickness measurement company should be part of the survey planning meeting to be held prior to the survey.

4.7.5 One or more of the following fracture detection procedures may be required if deemed necessary and should be operated by experienced qualified technicians:
(a) radiographic equipment
(b) ultrasonic equipment
(c) magnetic particle equipment
(d) dye penetrant

4.8 Survey at sea or at anchorage

4.8.1 Voyage surveys may be accepted provided the survey party is given the necessary assistance from the shipboard personnel. The necessary precautions and procedures for carrying out the survey are to be in accordance with **4.1** to **4.7** inclusive. Ballasting system must be secured at all times during tank surveys.

4.8.2 A communication system is to be arranged between the survey party in the spaces under examination and the responsible officer on deck.

4.9 Documentation on board

4.9.1 The following documentation is to be placed on board and maintained and updated by the owner for the life of ship in order to be readily available for the survey party.

4.9.2 Survey Report File: This file includes Reports of Structural Surveys, Executive Summary and Thickness Measurement Report.

4.9.3 Supporting Documents: The following additional documentation is to be placed on board, including any other information that will assist in identifying Suspect Areas requiring examination.
(a) Main structural plans of cargo holds and ballast tanks
(b) Previous repair history
(c) Cargo and ballast history
(d) Inspection and action taken by ship's personnel with reference to:
- structural deterioration in general

- leakages in bulkheads and piping
- condition of coating or corrosion protection, if any

(e) Survey Planning Document according to principles given in **4.3**

4.9.4 Prior to inspection, the completeness of the documentation onboard, and its contents as a basis for the survey should be examined.

5 Structural detail failures and repairs

5.1 General

5.1.1 The **catalogue of structural detail failures and repairs** contained in this section of the **Guidelines** collates data supplied by the IACS Member Societies and is intended to provide guidance when considering similar cases of damage and failure. The proposed repairs reflect the experience of the surveyors of the Member Societies, but it is realized that other satisfactory alternative methods of repair may be available. However, in each case the repairs are to be completed to the satisfaction of the Classification Society surveyor concerned.

5.2 Catalogue of structural detail failures and repairs

5.2.1 The catalogue has been sub-divided into parts and areas to be given particular attention during the surveys:

Part 1 Cargo hold region

Area 1 Deck structure
Area 2 Topside tank structure
Area 3 Side structure
Area 4 Transverse bulkheads including stool structure
Area 5 Double bottom including hopper tank structure

Part 2 Fore and aft end regions

Area 1 Fore end structure
Area 2 Aft end structure
Area 3 Stern frame, rudder arrangement and propeller shaft support

Part 3 Machinery and accommodation spaces

Area 1 Engine room structure
Area 2 Accommodation structure

Part 1 Cargo hold region

Contents

Area 1 Deck structure
Area 2 Topside tank structure
Area 3 Side structure
Area 4 Transverse bulkheads including stool structure
Area 5 Double bottom including hopper tank structure

Area 1 Deck structure

Contents

1 General

2 What to look for - On-deck inspection
2.1 Material wastage
2.2 Deformations
2.3 Fractures

3 What to look for - Under-deck inspection
3.1 Material wastage
3.2 Deformations
3.3 Fractures

4 General comments on repair
4.1 Material wastage
4.2 Deformations
4.3 Fractures
4.4 Miscellaneous

Figures and/or Photographs - Area 1	
No.	**Title**
Photograph 1	Heavy corrosion of hatch coaming and topside tank plating vertical strake

Examples of structural detail failures and repairs - Area 1	
Example No.	**Title**
1	Fractures at main cargo hatch corner
2-a	Fracture of welded seam between thick plate and thin plate at cross deck
2-b	Plate buckling in thin plate near thick plate at cross deck
2-c	Overall buckling of cross deck plating
3-a	Fractures in the web or in the deck at the toes of the longitudinal hatch coaming termination bracket
3-b	Fractures in the web or in the deck at the toes of the longitudinal hatch coaming termination bracket
4	Fractures in deck plating initiated from weld of access manhole
5	Deformed and fractured deck plating around tug bitt
6	Fractures around cut-outs in cross deck girder
7-a	Buckling of hatch coaming and hatch end beam
7-b	Fractures in hatch end beam at knuckle joint

Examples of structural detail failures and repairs - Area 1	
Example No.	**Title**
8	Fractures in hatch end beam at the joint to topside tank
9	Fractures in hatch end beam around feeding holes
10-a	Fractures in hatch coaming top plate at the termination of rail for hatch cover
10-b	Fractures in hatch coaming top plate at the termination of rail for hatch cover
11	Fractures in hatch coaming top plate initiated from butt weld of compression bar
12	Fractures in deck plating at the pilot ladder access of bulwarks

1 General

1.1 Deck structure outside hatches is subjected to longitudinal hull girder bending, caused by cargo distribution and wave actions. Moreover deck structure may be subjected to severe load due to green sea on deck, excessive deck cargo or improper cargo handling. Certain areas of the deck may also be subjected to additional compressive stresses caused by slamming or bow flare effect at the fore ship in heavy weather.

1.2 The cross deck structure between cargo hatches is subjected to transverse compression from the sea pressure on the ship sides and in-plane bending due to torsional distortion of the hull girder under wave action. Area around the corners of a main cargo hatch can be subjected to high cyclical stress due to the combined effect of hull girder bending moments, transverse and torsional loading.

1.3 Discontinuous cargo hatch side coamings can be subjected to significant longitudinal bending stress. This introduces additional stresses at the mid-length of hatches and stress concentrations at the termination of the side coaming extensions.

1.4 Hatch cover operations, in combination with poor maintenance, can result in damage to cleats and gasket, leading to the loss of weathertight integrity of the hold spaces. Damage to hatch covers can also be sustained by mishandling and overloading of deck cargoes.

1.5 The marine environment, the humid atmosphere due to the water vapour from the cargo in cargo holds, and the high temperature on deck and hatch cover plating due to heating from the sun may result in accelerated corrosion of plating and stiffeners making the structure more vulnerable to the exposures described above.

1.6 Bulwarks are provided for the protection of crew and cargoes, and lashing of cargoes on deck. Although bulwarks are not normally considered as a structural item which contributes to the longitudinal strength of the hull girder, they can be subjected to significant longitudinal bending stress which can lead to fracture and corrosion, especially at the termination of bulwarks, such as at pilot ladder access or expansion joints. These fractures may propagate to deck plating and cause serious damage.

1.7 The deterioration of fittings on deck, such as ventilators, air pipes and sounding pipes, may cause serious deficiency in weathertightness/ watertightness and during fire fighting.

1.8 If the ship is assigned timber freeboards, fittings for stowage of timber deck cargo have to be inspected in accordance with ILLC 1966. Deterioration of the fittings may cause cargo to shift resulting in damage to the ship structure.

2 What to look for - On-deck inspection

2.1 Material wastage

2.1.1 The general corrosion condition of the deck structure, cargo hatch covers and coamings may be observed by visual inspection. Special attention should be paid to areas where pipes, e.g. fire main pipes, hydraulic pipes and pipes for compressed air, are fitted close to the plating, making proper maintenance of the protective coating difficult to carry out.

2.1.2 Grooving corrosion may occur at the transition between the thicker deck plating outside line of cargo hatches and the thinner cross deck plating, especially when the difference in plate thickness is large. The difference in plate thickness causes water to gather in this area resulting in corrosion ambience which may subsequently lead to grooving.

2.1.3 Pitting corrosion may occur throughout the cross deck strip plating and on hatch covers. The combination of accumulated water with scattered residue of certain cargoes may create a corrosive reaction.

2.1.4 Wastage/corrosion may affect the integrity of steel hatch covers and the associated moving parts, e.g. cleats, pot-lifts, roller wheels, etc. In some ships pontoon hatch covers with tarpaulins are used. The tarpaulins are liable to tear due to deck cargo, such as timbers, and cause heavy corrosion to the hatch covers.

2.2 Deformations

2.2.1 Plate buckling (between stiffeners) may occur in areas subjected to in-plane compressive stresses, in particular if corrosion is in evidence. Special attention should be paid to areas where the compressive stresses are perpendicular to the direction of the stiffening system. Such areas may be found in the cross deck strips between hatches when longitudinal stiffening is applied (See **Examples 2-b** and **2-c**).

2.2.2 Deformed structure may be observed in areas of the deck, hatch coamings and hatch covers where cargo has been handled/loaded or mechanical equipment, e.g. hatch covers, has been operated. In exposed deck area, in particular deck forward, deformation of structure may result from shipping green water.

2.2.3 Deformation/twisting of exposed structure above deck, such as side-coaming brackets and bulwarks, may result from impact due to improper handling of cargo and cargo handling machinery. Such damages may also be caused by shipping of green sea water on deck in heavy weather.

2.3 Fractures

2.3.1 Fractures in areas of structural discontinuity and stress concentration will normally be detected by close-up inspection. Special attention should be given to the structures at cargo hatches in general and to corners of deck openings in particular.

2.3.2 Fractures initiated in the deck plating outside the line of hatch (See **Example 1**) may propagate across the deck resulting in serious damage to hull structural integrity. Fractures initiated in the deck plating of the cross deck strip, in particular at the transition between the thicker deck plating and the thinner cross deck plating (See **Example 2-a**), may cause serious consequences if not repaired immediately.

2.3.3 Other fractures that may occur in the deck plating at hatches and in connected coamings can result/originate from:

(a) The geometry of the corners of the hatch openings.
(b) Grooving caused by wire ropes of cargo gear.
(c) Welded attachment and shedder plate close to or on the free edge of the hatch corner plating.
(d) Fillet weld connection of the coaming to deck, particularly at a radiused coaming plate at the hatch corner plating.
(e) Attachments, cut-outs and notches for securing devices, and operating mechanisms for opening/closing hatch covers at the top of the coaming and/or coaming top bar, if any, at the mid-length of hatch (See **Examples 10-a**, **10-b** and **11**).
(f) The termination of the side coaming extension brackets (See **Examples 3-a** and **b**).

2.3.4 Fractures in deck plating often occur at the termination of bulwarks, such as pilot ladder recess, due to stress concentration. The fractures may propagate resulting in serious casualty when the deck is subject to high longitudinal bending stress (See **Example 12**).

3 What to look for - Under-deck inspection

3.1 Material wastage

3.1.1 The level of wastage of under-deck stiffeners/structure in cross deck may have to be established by means of thickness measurements. The combined effect of the marine environment and the high humidity atmosphere within cargo hold s will give rise to a high corrosion rate.

3.1.2 Severe corrosion of the hatch coaming plating inside cargo hold and topside tank plating vertical strake may occur due to difficult access for the maintenance of the protective coating. This may lead to fractures in the structure (See **Photograph 1**).



Photograph 1 **Heavy corrosion of hatch coaming and topside tank plating vertical strake**

3.2 Deformations

3.2.1 Buckling should be looked for in the primary supporting structure, e.g. hatch end beams and topside tank plating vertical strake. Such buckling may be caused by:

(a) Loading deviated from loading manual (block loading).
(b) Excessive sea water pressure in heavy weather.
(c) Excessive deck cargo.
(d) Sea water on deck in heavy weather.
(e) Combination of these causes.

3.2.2 Improper ventilation during ballasting/deballasting of topside tank/ballast hold may cause deformation in deck structure. If such deformation is observed, internal inspection of topside tank/ballast hold should be carried out in order to confirm the nature and the extent of damage.

3.3 Fractures

3.3.1 Fractures may occur at the connection between the deck plating, transverse bulkhead and

girders/stiffeners. This is often associated with a reduction in area of the connection due to corrosion.

3.3.2 Fractures in primary supporting structure, e.g. hatch end beams, may be found in the weld connections to the topside tank plating vertical strake and to the girders.

4 General comments on repair

4.1 Material wastage

4.1.1 In the case of grooving corrosion at the transition between the thicker deck plating outside line of cargo hatches and the thinner cross deck plating, consideration should be given to renewal of part of, or the entire width of, the adjacent cross deck plating.

4.1.2 In the case of pitting corrosion throughout the cross deck strip plating, consideration should be given to renewal of part of or the entire cross deck plating.

4.1.3 When heavy wastage is found on under-deck structure, the whole or part of the structure may be cropped and renewed depending on the permissible diminution levels allowed by the Classification Society concerned.

4.1.4 For wastage of cargo hatch covers a satisfactory thickness determination is to be carried out and the plating and stiffeners are to be cropped and renewed as appropriate depending on the extent of the wastage.

4.2 Deformations

4.2.1 When buckling of the deck plating has occurred, appropriate reinforcement is necessary in addition to cropping and renewal regardless of the corrosion condition of the plating.

4.2.2 Where buckling of hatch end beams has occurred due to inadequate transverse strength, the plating should be cropped and renewed with additional panel stiffeners fitted.

4.2.3 Buckled cross deck structure, due to loss in strength caused by wastage, is to be cropped and renewed as necessary. If the cross deck is stiffened longitudinally and the buckling results from inadequate transverse strength, additional transverse stiffeners should be fitted (See **Example 2-b** and **2-c**).

4.2.4 Deformations of cargo hatch covers should be cropped and part renewed, or renewed in full, depending on the extent of the damage.

4.3 Fractures

4.3.1 Fractures in way of cargo hatch corners should be carefully examined in conjunction with the design details (See **Example 1**). Re-welding of such fractures is normally not considered to be a permanent solution. Where the difference in thickness between an insert plate and the adjacent deck plating is greater than 3 mm, the edge of the insert plate should be suitably beveled. In order to reduce the residual stress arising from this repair situation, the welding sequence and procedure is to be carefully monitored and low hydrogen electrodes should be used for welding the insert plate to the adjoining structure.

4.3.2 Where welded shedder plates are fitted into the corners of the hatch coamings and the stress concentration at the deck connection is considered to be the cause of the fractures, the deck connection should be left unwelded

4.3.3 In the case of fractures at the transition between the thicker deck plating outside line of cargo hatches and the thinner cross deck plating, consideration should be given to renewal of part or the entire width of the adjacent cross deck plating, possibly with increased thickness (See **Example 2-a**).

4.3.4 When fractures have occurred in the connection of transverse bulkhead to the cross deck structure, consideration should be given to renew and re-weld the connecting structure beyond the damaged area with the aim of increasing the area of the connection.

4.3.5 Fractures of hatch end beams should be repaired by renewing the damaged structure, and by full penetration welding to the deck.

4.3.6 To reduce the possibility of future fractures in cargo hatch coamings the following details should be observed:

(a) Cut-outs and other discontinuities at top of coaming and/ or coaming top bar should have rounded corners (preferably elliptical or circular in shape) (See **Example 10-b**).
Any local reinforcement should be given a tapered transition in the longitudinal direction and the rate of taper should not exceed 1 in 3 (See **Example 10-a**).

(b) Fractures, which occur in the fillet weld connection to the deck of radiused coaming plates at the corners, should be repaired by replacing existing fillet welds with full penetration welding using low hydrogen electrodes or equivalent. If the fractures are extensive and recurring, the coamings should be redesigned to form square corners with the side coaming extending in the form of tapered brackets. Continuation brackets are to be arranged transversely in line with the hatch end coamings and the under-deck transverse.

(c) Cut-outs and drain holes are to be avoided in the hatch side coaming extension brackets. For fractured brackets, see **Examples 3 a** and **b**.

4.3.7 For cargo hatch covers, fractures of a minor nature may be veed-out and welded. For more extensive fractures, the structure should be cropped and part renewed.

4.3.8 For fractures without significant corrosion at the end of bulwarks, an attempt should be made to modify the design in order to reduce the stress concentration in connection with general cropping and renewal (See **Example 12**).

4.4 Miscellaneous

4.4.1 Ancillary equipment such as cleats, rollers etc. on cargo hatch covers is to be renewed as necessary when damaged or corroded.

BULK CARRIERS	Guidelines for Surveys, Assessment and Repair of Hull Structure	
Part 1	**Cargo hold region**	**Example No.**
Area 1	**Deck structure**	**1**
Detail of damage	Fractures at main cargo hatch corner	

Sketch of damage

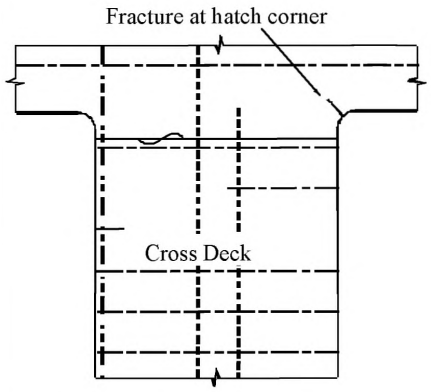

Sketch of repair

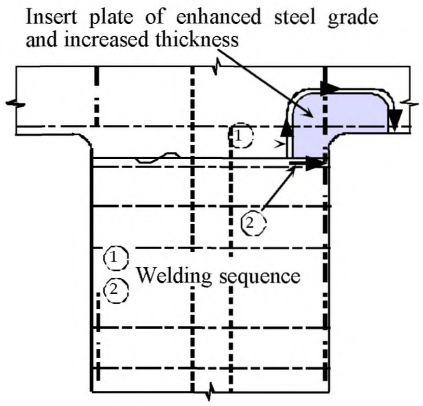

Notes on possible cause of damage

1. Stress concentration at hatch corners, i.e. radius of corner.
2. Welded attachment of shedder plate close to edge of hatch corner.
3. Wire rope groove.

Notes on repairs

1. The corner plating in way of the fracture is to be cropped and renewed. If stress concentration is primary cause, insert plate should be increased thickness, enhanced steel grade and/or improved geometry.
   Insert plate should be continued beyond the longitudinal and transverse extent of the hatch corner radius ellipse or parabola, and the butt welds to the adjacent deck plating should be located well clear of the butts in the hatch coaming.
   It is recommended that the edges of the insert plate and the butt welds connecting the insert plates to the surrounding deck plating be made smooth by grinding. In this respect caution should be taken to ensure that the micro grooves of the grinding are parallel to the plate edge.
2. If the cause of fracture is welded attachment of shedder plate, the deck connection should be left unwelded.
3. If the cause of the fracture is wire rope groove, replacement to the original design can be accepted.

BULK CARRIERS	Guidelines for Surveys, Assessment and Repair of Hull Structure	
Part 1	**Cargo hold region**	**Example No.**
Area 1	**Deck structure**	**2-a**
Detail of damage	Fractures of welded seam between thick plate and thin plate at cross deck	

Sketch of damage

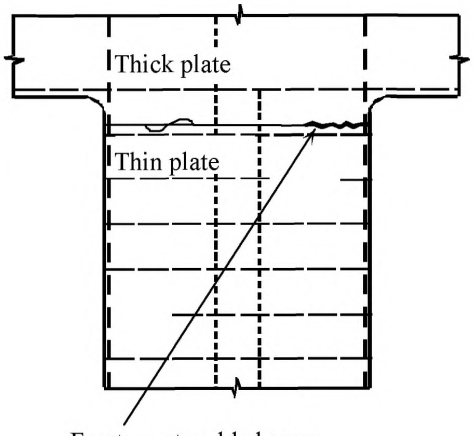

Sketch of repair

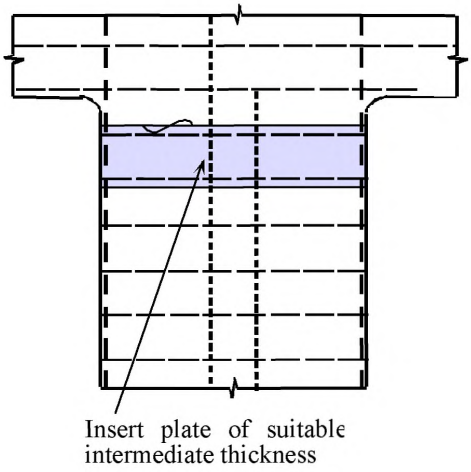

Notes on possible cause of damage

1. Stress concentration created by abrupt change in deck plating thickness.
2. In-plane bending in cross deck strip due to torsional (longitudinal) movements of ship sides.
3. Welded seam not clear of tangent point of hatch corner.

Notes on repairs

1. Insert plate of intermediate thickness is recommended.
2. Smooth transition between plates (beveling) should be considered.

BULK CARRIERS	Guidelines for Surveys, Assessment and Repair of Hull Structure	
Part 1	**Cargo hold region**	**Example No.**
Area 1	**Deck structure**	**2-b**
Detail of damage	Plate buckling in thin plate near thick plate at cross deck	

Sketch of damage

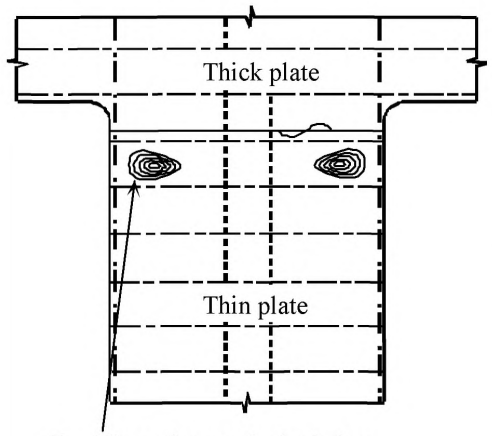

Buckling of cross deck plating (Buckling of hatch end structure should be examined. Refer to **Example 7-a**.)

Sketch of repair

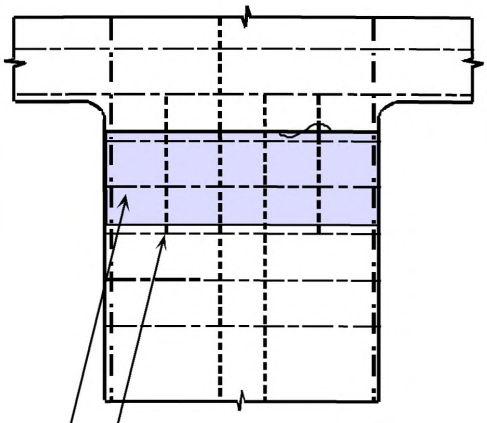

Additional transverse stiffening and/or insertion of plate with suitable intermediate thickness

Notes on possible cause of damage

1. In-plane bending of cross deck strip due to torsional (longitudinal) movement of ship sides, often in combination with corrosion.
2. Insufficient plate thickness and/or transverse stiffening.

Notes on repairs

1. Transverse stiffeners extending from hatch sides towards centerline at least 10% of breadth of hatch, and/or increased plate thickness in the same area.

BULK CARRIERS	Guidelines for Surveys, Assessment and Repair of Hull Structure	
Part 1	Cargo hold region	Example No.
Area 1	Deck structure	2-c
Detail of damage	Overall buckling of cross deck plating	

Sketch of damage

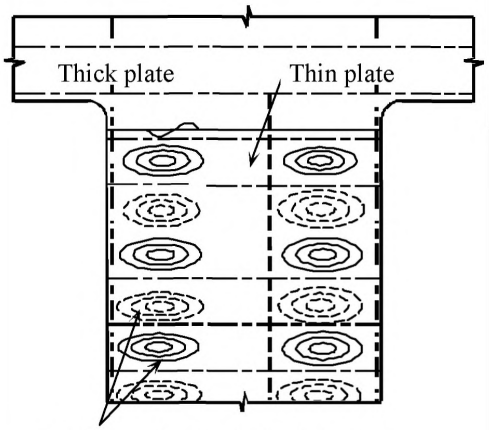

Buckling of cross deck plating (Buckling of hatch end structure should be examined. Refer to **Example 7-a.**)

Sketch of repair

Repair A

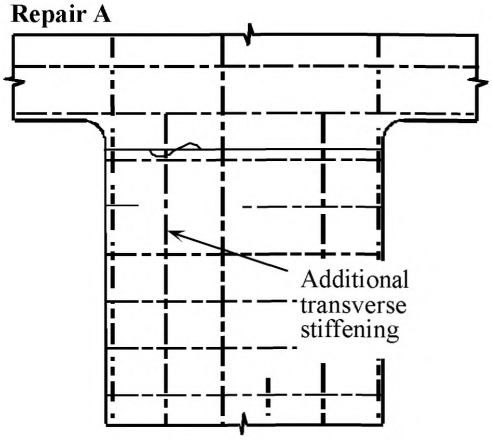

Repair B

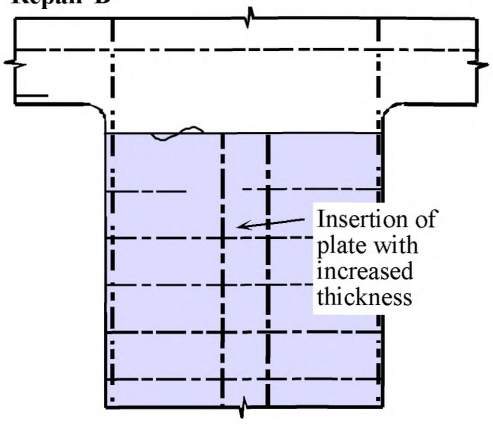

Notes on possible cause of damage

1. Transverse compression of deck due to sea load.
2. Transverse compression of deck due to excessive loading in two adjacent holds.
3. Insufficient plate thickness and/or transverse stiffening.

Notes on repairs

1. **Repair A** Plating of original thickness in combination with additional transverse stiffening.
2. **Repair B** Insertion of plating of increased thickness.

BULK CARRIERS	Guidelines for Surveys, Assessment and Repair of Hull Structure	
Part 1	**Cargo hold region**	**Example No.**
Area 1	**Deck structure**	**3-a**
Detail of damage	Fractures in the web or in the deck at the toes of the longitudinal hatch coaming termination bracket	

Sketch of damage

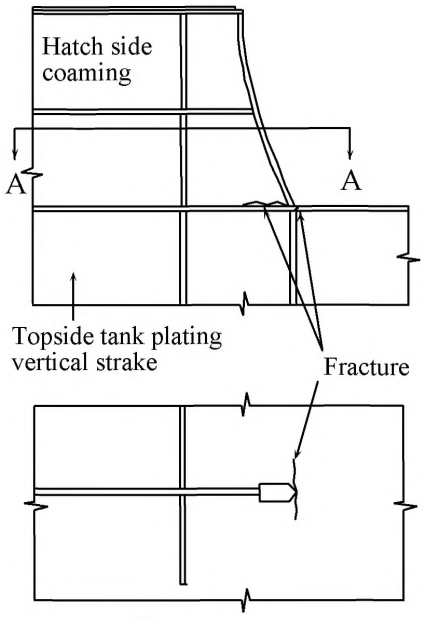

View A-A

Sketch of repair

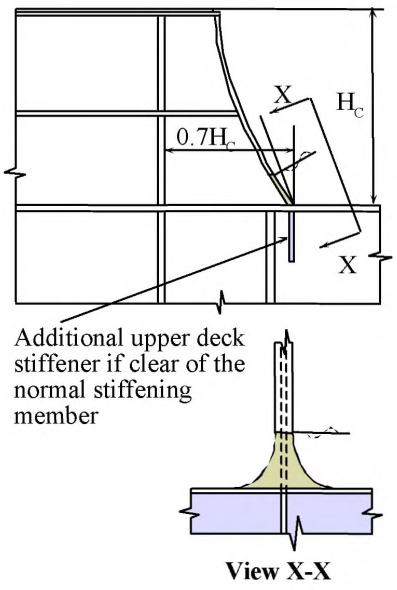

View X-X

Notes on possible cause of damage

1. This damage is caused by stress concentrations attributed to the design of the bracket.

Notes on repairs

1. The design of the bracket can be altered as shown above, however, it is to be ensured that an additional under deck stiffener is provided at the toe of the termination bracket, where the toe is clear of the normal stiffening member.
2. Full penetration weld for a distance of 0.15 H_C from toe of side coaming termination bracket and for connection of athwartship gusset bracket to deck.
3. The fracture in deck plating to be veed-out and rewelded or deck plating cropped and part renewed as appropriate, using low hydrogen electrodes for welding.

BULK CARRIERS	Guidelines for Surveys, Assessment and Repair of Hull Structure	
Part 1	**Cargo hold region**	**Example No.**
Area 1	**Deck structure**	**3-b**
Detail of damage	Fractures in the web or in the deck at the toes of the longitudinal hatch coaming termination bracket	

Sketch of damage

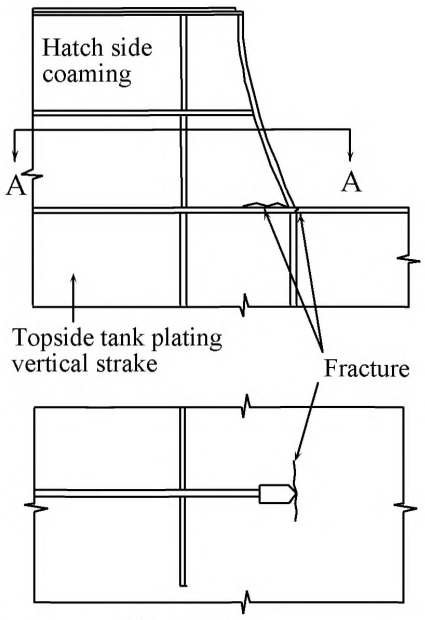

View A-A

Sketch of repair

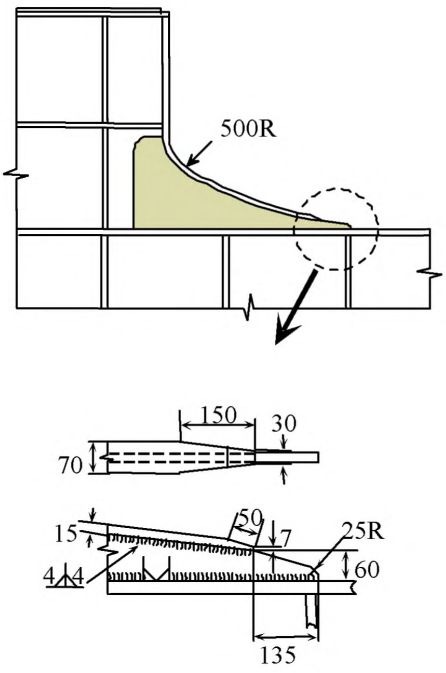

Notes on possible cause of damage

1. This damage is caused by stress concentrations attributed to the design of the bracket.

Notes on repairs

1. The design of the bracket can be altered as shown above, however, it is to be ensured that an additional under deck stiffener is provided at the toe of the termination bracket, where the toe is clear of the normal stiffening member.
2. The fracture in deck plating to be veed-out and rewelded or deck plating cropped and part renewed as appropriate, using low hydrogen electrodes for welding.

BULK CARRIERS	Guidelines for Surveys, Assessment and Repair of Hull Structure	
Part 1	Cargo hold region	Example No.
Area 1	Deck structure	4
Detail of damage	Fractures in deck plating initiated from weld of access manhole	

Sketch of damage

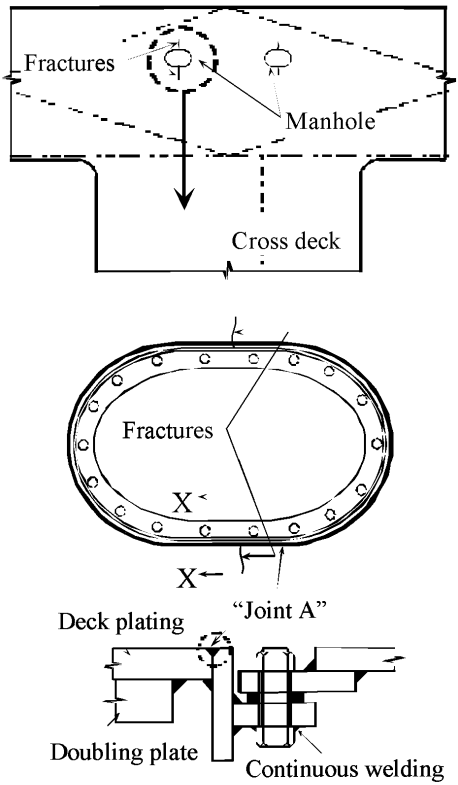

Section X-X

Sketch of repair

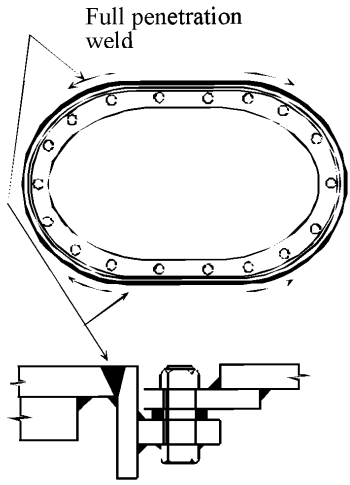

Notes on possible cause of damage

1. Heavy weather.
2. Improper welding of joint "A".

Notes on repairs

1. The fracture in deck plating to be veed-out and rewelded, or deck plating cropped and part renewed if considered necessary.
2. Full penetration of joint "A" should be considered.

BULK CARRIERS	Guidelines for Surveys, Assessment and Repair of Hull Structure	
Part 1	Cargo hold region	Example No.
Area 1	Deck structure	5
Detail of damage	Deformed and fractured deck plating around tug bitt	

Sketch of damage

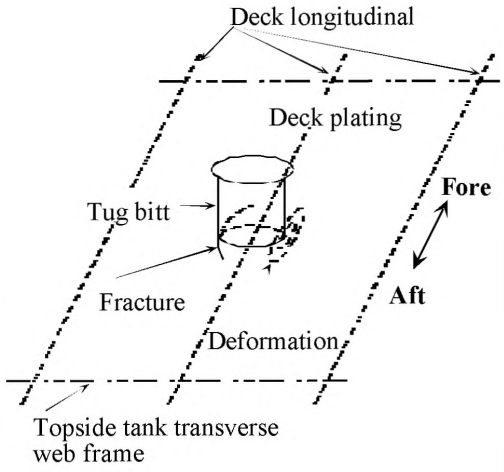

Sketch of repair

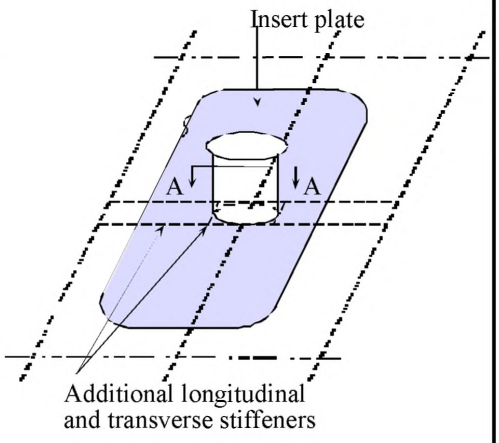

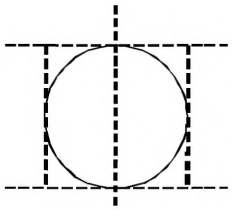

View A-A

Notes on possible cause of damage

1. Insufficient strength

Notes on repairs

1. Fractured/deformed deck plating should be cropped and part renewed.
2. Reinforcement by stiffeners should be considered.

BULK CARRIERS	Guidelines for Surveys, Assessment and Repair of Hull Structure	
Part 1	**Cargo hold region**	**Example No.**
Area 1	**Deck structure**	**6**
Detail of damage	Fractures around cut-outs in cross deck girder	

Sketch of damage

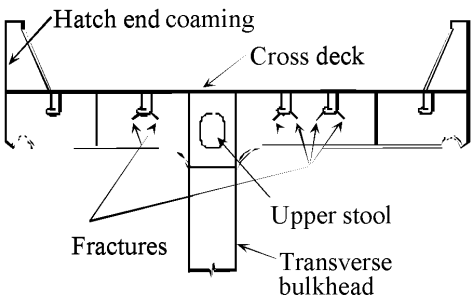

Sketch of repair

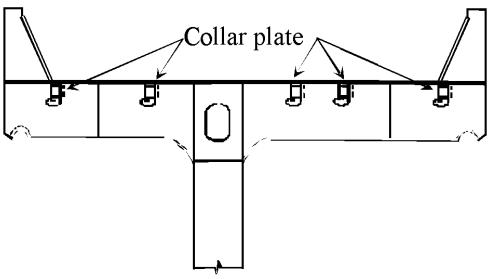

Notes on possible cause of damage

1. Stress concentration at the cut-outs in cross deck girder.

Notes on repairs

1. Fractured web plate of cross deck girder to be cropped and part renewed.
2. Collar plates to be provided.

BULK CARRIERS	Guidelines for Surveys, Assessment and Repair of Hull Structure	
Part 1	**Cargo hold region**	**Example No.**
Area 1	**Deck structure**	**7-a**
Detail of damage	Buckling of hatch coaming and hatch end beam	

Sketch of damage

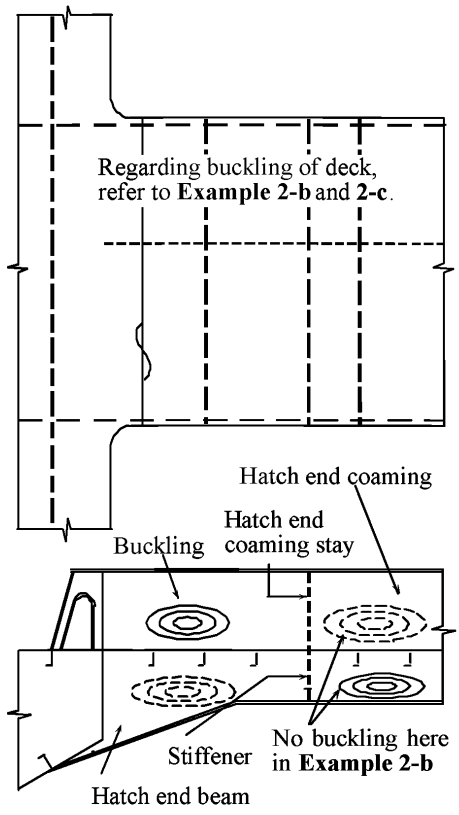

Sketch of repair

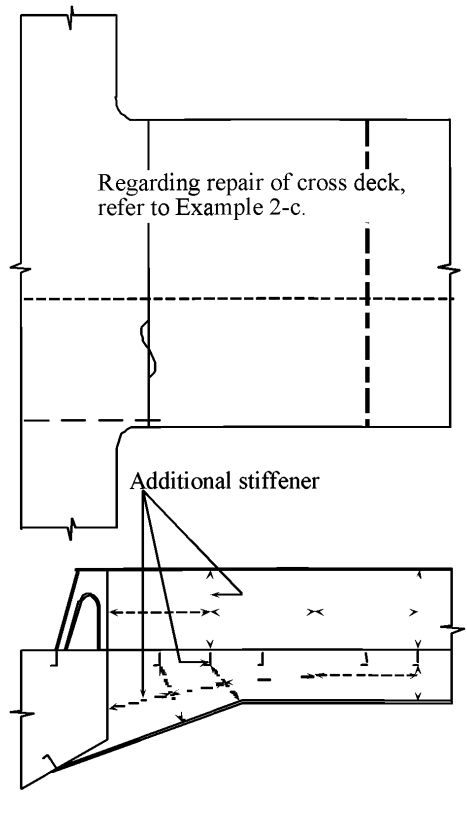

Notes on possible cause of damage

1. Additional transverse forces due to heavy seas, and torsional loading.
2. Inadvertent overloading of cargo spaces.

Notes on repairs

1. If buckling is due to loss in strength induced by corrosion, the buckled zone to be cropped and renewed as necessary.
2. If buckling results from inadequate strength, stiffeners should be fitted in addition to cropping and renewal of buckled zone.

BULK CARRIERS	Guidelines for Surveys, Assessment and Repair of Hull Structure	
Part 1	**Cargo hold region**	**Example No.**
Area 1	**Deck structure**	**7-b**
Detail of damage	Fractures in hatch end beam at knuckle joint	

Sketch of damage

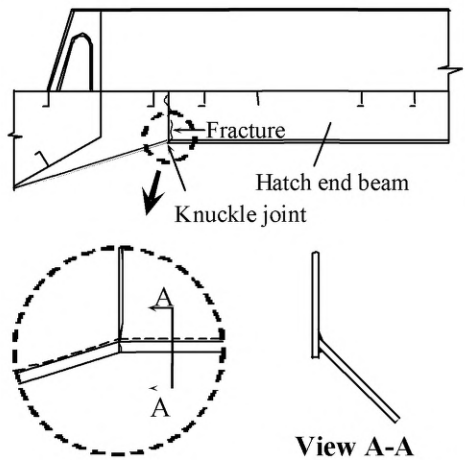

Sketch of repair

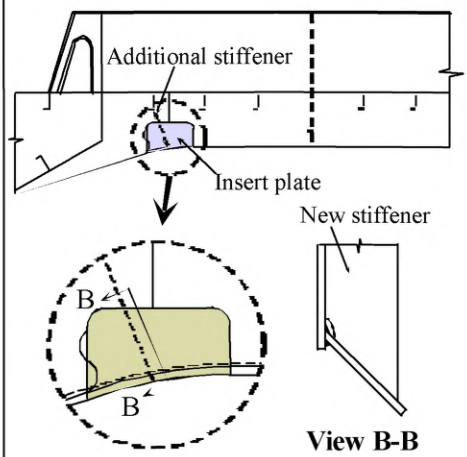

Notes on possible cause of damage

1. Stress concentration at knuckle joint.

Notes on repairs

1. Fractured part to be cropped and renewed.
2. Improvement to avoid stress concentration at knuckle joint should be considered.

BULK CARRIERS	Guidelines for Surveys, Assessment and Repair of Hull Structure	
Part 1	**Cargo hold region**	**Example No.**
Area 1	**Deck structure**	**8**
Detail of damage	Fractures in hatch end beam at the joint to topside tank	

Sketch of damage

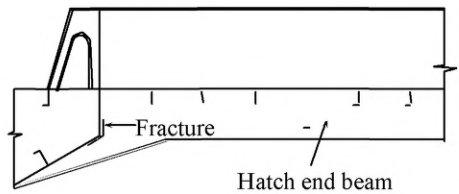

Sketch of repair

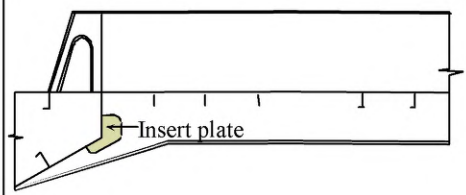

Notes on possible cause of damage

1. Misalignment of the hatch end beam with transverse web frame in topside tank.
2. Stress concentration.

Notes on repairs

1. Fractured part to be cropped and renewed.

BULK CARRIERS	Guidelines for Surveys, Assessment and Repair of Hull Structure	
Part 1	**Cargo hold region**	**Example No.**
Area 1	**Deck structure**	**9**
Detail of damage	Fractures in hatch end beam around feeding holes	

Sketch of damage

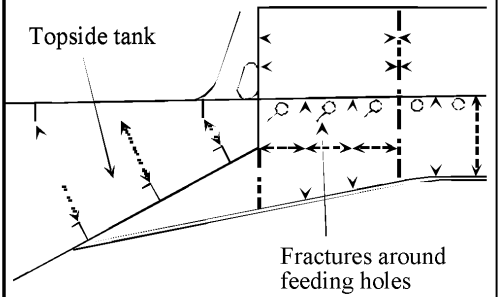

Sketch of repair

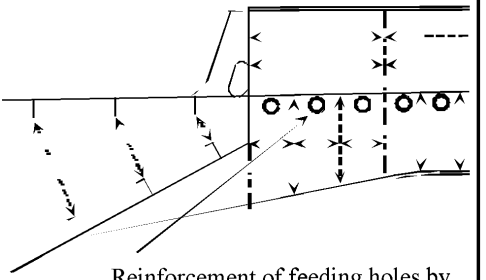

Reinforcement of feeding holes by doubling plate or insert of pipe. See "Detail" below.

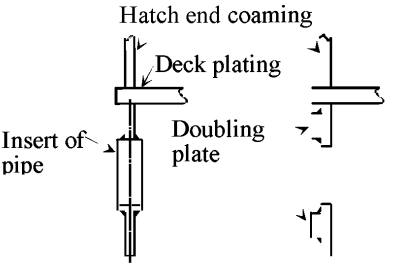

Detail

Notes on possible cause of damage

1. Inadequate reinforcement around feeding hole.
2. Corrosion.

Notes on repairs

1. Fractured part to be veed-out or cropped and renewed.
2. If the fractured part is free from corrosion, reinforcement should be considered.

BULK CARRIERS	Guidelines for Surveys, Assessment and Repair of Hull Structure	
Part 1	**Cargo hold region**	**Example No.**
Area 1	**Deck structure**	**10-a**
Detail of damage	Fractures in hatch coaming top plate at the termination of rail for hatch cover	

Sketch of damage

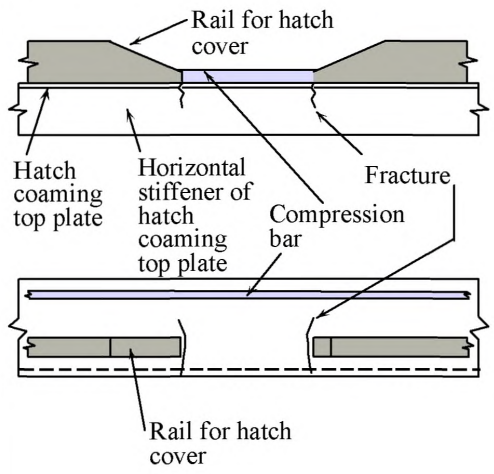

Sketch of repair

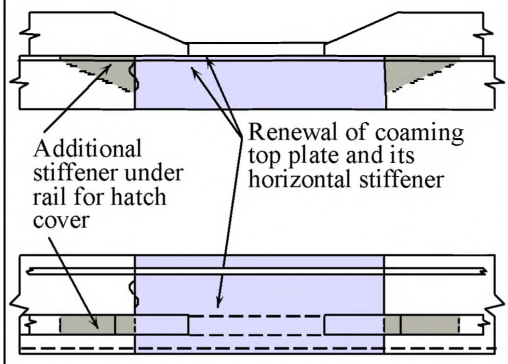

Notes on possible cause of damage

1. Stress concentration at the termination of the rail for hatch cover due to poor design.

Notes on repairs

1. Fractured plate is to be cropped and part renewed.
2. Thicker insert plate and/or reinforcement by additional stiffener under the top plate should be considered. Also refer to **Example 10-b**.

BULK CARRIERS	Guidelines for Surveys, Assessment and Repair of Hull Structure	
Part 1	Cargo hold region	Example No.
Area 1	Deck structure	10-b
Detail of damage	Fractures in hatch coaming top plate at the termination of rail for hatch cover	

Sketch of damage

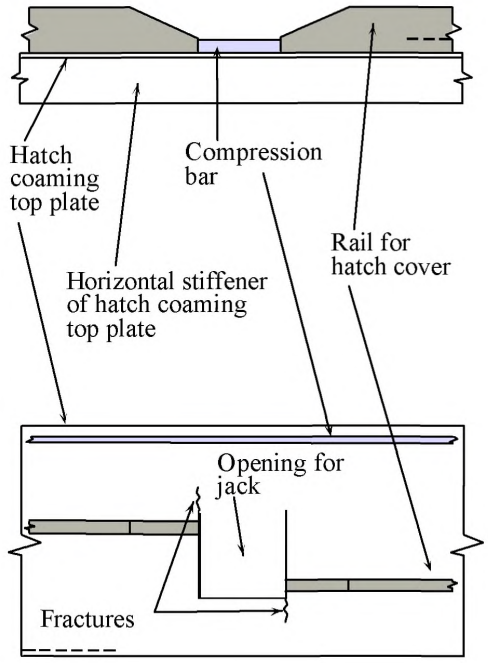

Sketch of repair

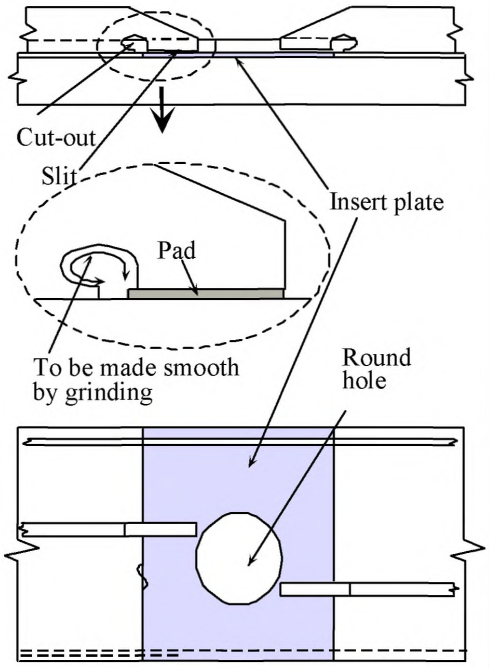

Notes on possible cause of damage

1. Stress concentration at the termination of the rail for hatch cover due to poor design of opening.

Notes on repairs

1. Fractured plate is to be cropped and part renewed.
2. Thicker insert plate and/or reduction of stress concentration adopting large radius should be considered. Or cut-out in the rail and detachment of the welds as shown in the above drawing should be considered in order to reduce the stress of the corner of the opening.

BULK CARRIERS	Guidelines for Surveys, Assessment and Repair of Hull Structure	
Part 1	**Cargo hold region**	**Example No.**
Area 1	**Deck structure**	**11**
Detail of damage	Fractures in hatch coaming top plate initiated from butt weld of compression bar	

Sketch of damage

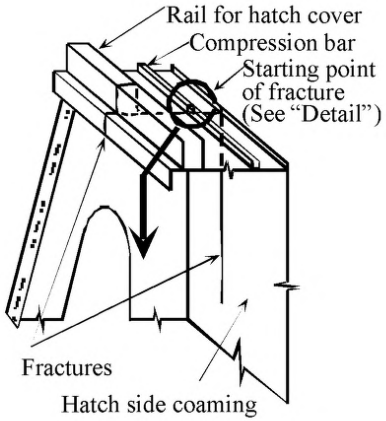

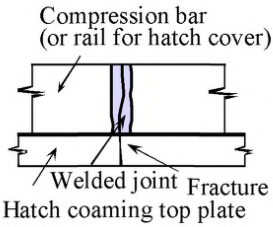

Detail

Sketch of repair

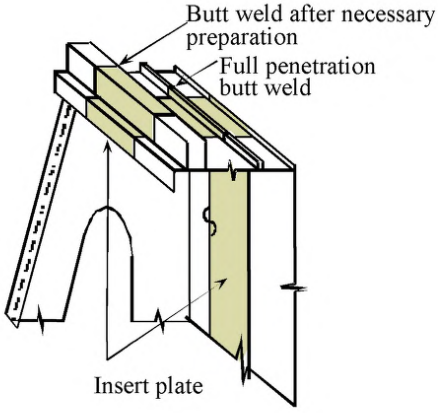

Notes on possible cause of damage

1. Heavy weather
2. Insufficient preparation of weld of compression bar and/or rail (Although the compression bar and rail are not longitudinal strength members, they subject same longitudinal stress as longitudinal members)
3. Crack may initiate from insufficient penetration of weld of rail for hatch cover.

Notes on repairs

1. Loading condition of the ship and proper welding procedure should be carefully considered.
2. Fractured structure is to be cropped and renewed if considered necessary. (Small fracture may be veed-out and rewelded.)
3. Full penetration welding should be applied to the butt weld of compression bar and rail.

BULK CARRIERS	Guidelines for Surveys, Assessment and Repair of Hull Structure	
Part 1	**Cargo hold region**	**Example No.**
Area 1	**Deck structure**	**12**
Detail of damage	Fractures in deck plating at the pilot ladder access of bulwarks	

Sketch of damage

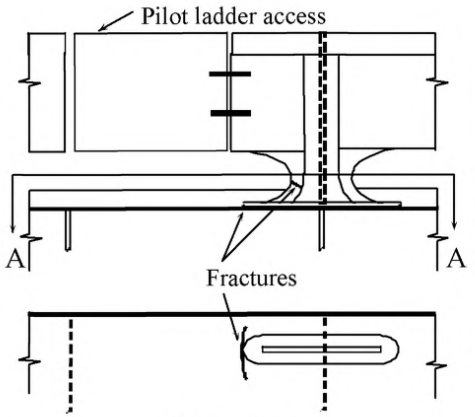

View A-A

Sketch of repair

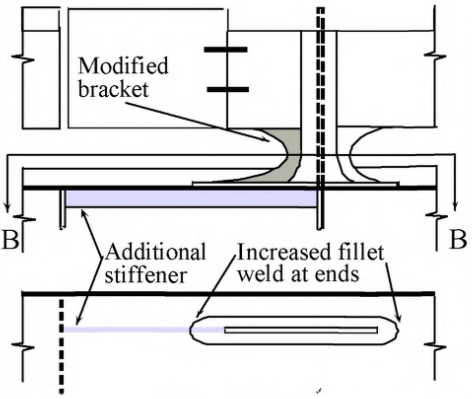

View B-B

Notes on possible cause of damage

1. Stress concentration at the termination of bulwarks.

Notes on repairs

1. Fractured deck plating should be cropped and part renewed.
2. Reduction of stress concentration should be considered. In the above figure gusset plate was replaced with soft type for the fracture in gusset plate and pad plate was increased. Additional stiffeners were provided for the fracture in deck plating.

Area 2 Topside tank structure

Contents

1 General

2 What to look for
2.1 Material wastage
2.2 Deformations
2.3 Fractures

3 General comments on repair
3.1 Material wastage
3.2 Deformations
3.3 Fractures

Figures and/or Photographs - Area 2	
No.	**Title**
Figure 1	Topside tank - Potential problem areas

Examples of structural detail failures and repairs - Area 2	
Example No.	**Title**
1	Fractures around unstiffened lightening holes and manholes in wash bulkhead
2-a	Thinning and subsequent buckling of web plating in the vicinity of the radii of the opening
2-b	Thinning and subsequent buckling of web plating in the vicinity of the radii of the opening
2-c	Thinning and subsequent buckling of web plating in the vicinity of the radii of the opening
3	Fractures in transverse web at sniped end of stiffener
4-a	Fractures at slots in way of transverse web frame
4-b	Fractures and buckling at slots in way of transverse web frame
5	Fractures in longitudinal at transverse web frame or bulkhead
6	Fractures in the lowest longitudinal at transverse web frame
7-a	Fractures in transverse brackets
7-b	Fractures in transverse bracket
7-c	Fractures at toes of transverse bracket
8	Fractures in sloping plating and vertical strake initiated from the connection of topside tank to hatch end beam
9	Fractures in sloping plating at knuckle

Examples of structural detail failures and repairs - Area 2	
Example No.	**Title**
10	Fractures in way of collision bulkhead at intersection with topside tank structure in foremost cargo hold
11	Fractures in way of engine room forward bulkhead at intersection with topside tank structure in aftermost cargo hold

1 General

1.1 Topside tanks are highly susceptible to corrosion and wastage of the internal structure. This is a major problem for all bulk carriers, particularly for ageing ships and others where the coatings have broken down. Coatings, if applied and properly maintained, serve as an indication as to whether the structure remains in satisfactory condition and highlights any structural defects.

In some ships topside tanks are protected by sacrificial anodes in addition to coatings. This system is not effective for the upper parts of the tanks since the system requires the structure to be fully immersed in sea water, and the tanks may not be completely filled during ballast voyages.

Other major factors contributing to damages of the topside tank structure are those associated with overpressurisation and sloshing in partially filled adjacent ballast tanks/holds due to ship rolling in heavy weather.

1.2 Termination of longitudinals in the fore and aft regions of the ship, in particular at the collision and engine room bulkheads, is prone to fracture due to high stress concentration if the termination detail is not properly designed. Knuckle joint in topside tanks in the fore and aft regions of the ship may suffer from fractures if the structure is not properly reinforced, see **Example 10**.

2 What to look for

2.1 Material wastage

2.1.1 The combined effect of the marine environment and the high humidity atmosphere within a topside tank hold will give rise to a high corrosion rate.

2.1.2 Rate and extent of corrosion depends on the environmental conditions, and protective measures employed, such as coatings and sacrificial anodes. The following structures are generally susceptible to corrosion (See **Figure 1**).

(a) Structure in corrosive environment
Deck plating and deck longitudinal
Transverse bulkhead adjacent to heated fuel oil tank
Lowest part of sloping plating

(b) Structure subject to high stress
Face plates and web plates of transverse at corners
Connection of side longitudinal to transverse

(c) Areas susceptible to coating breakdown
Back side of face plate of longitudinal
Welded joint
Edge of access opening

(d) Areas subjected to poor drainage
Web of side and sloping longitudinals

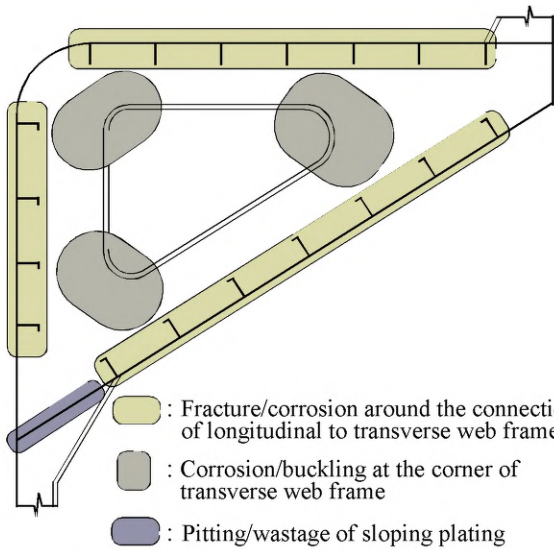

(a) Transverse web frame section

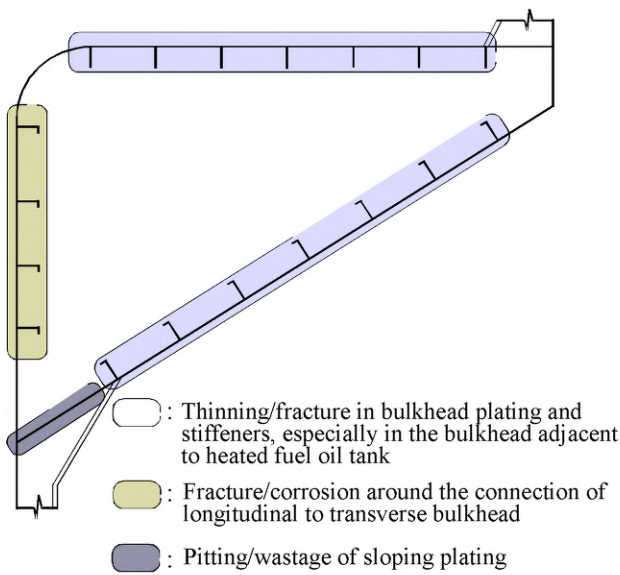

(b) Transverse bulkhead section

Figure 1 Topside tank - Potential problem areas

2.2 Deformations

2.2.1 Deformation of structure may be caused by contact (with quay side, ice, touching underwater objects, etc.), collision, mishandling of cargo and high stress. Attention should be paid to the following areas during inspection::

(a) Structure subjected to high stress
Buckling of transverse webs at corners

(b) Structure adjacent to a ballast hold
Deformations may be found in the following structural members caused by sloshing in partially filled ballast hold and/or by improper carriage of ballast water (See Note):

- Buckling of transverse web and/or collapse of transverse attached to sloping plating
- Deformation of sloping plating and/or collapse of sloping plating longitudinals
- Buckling of diaphragm, if provided

Note: In some bulk carriers the topside tanks in way of a ballast hold are designed to be filled when the hold is used for the carriage of water ballast. In such ships, if the topside tanks are not filled in the ballast condition, the structural members in the topside tanks may suffer fracture/deformation as a result of increased stress.

2.2.2 Improper ventilation during ballasting/deballasting of topside tank/ballast hold may cause deformation in deck structure and damage to topside tank structure. If such deformation is observed during on-deck inspection, internal inspection of topside tank should be carried out in order to confirm the nature and the extent of damage.

2.3 Fractures

2.3.1 Attention should be paid to the following areas during inspection for fracture damage:

(a) Areas subjected to stress concentration
- Welded joints of face plate of transverse at corners
- Connection of sniped ends of stiffener to transverse web, near or at corners of the transverse
- Connection of the lowest longitudinal to transverse web frame, especially with reduced scantlings (See **Example 6**).
- Termination of longitudinal in fore and aft topside tanks
- Knuckle joint of sloping plating in foremost and aftermost topside tanks (See **Example 9**).
- Transition regions in foremost and aftermost topside tanks (Refer to **2.3.2**)
- Connection in line with hold transverse bulkhead corrugations and transverse stools
- Connection in line with the side shell transverse framing, and end brackets, particularly at the bracket toes

(b) Areas subjected to dynamic wave loading
- Connection of side longitudinal to watertight bulkhead
- Connection of side longitudinal to transverse web frame

2.3.2 The termination of the following structural members at the collision bulkhead or engine room forward bulkhead is prone to fracture damage due to discontinuity of the structure:

- Topside tank sloping plating
- Topside tank plating vertical strake
- Fore peak tank top plating (Boatswain's store deck plating)
- Longitudinal bulkhead of fuel tank in engine room

In order to avoid stress concentration due to discontinuity appropriate stiffeners are to be provided in the opposite space. If such stiffeners are not provided, or are deficient due to corrosion or misalignment, fractures may occur at the terminations.

3 General comments on repair

3.1 Material wastage

3.1.1 If the corrosion is caused by high stress concentration, renewal with original thickness is not sufficient to avoid reoccurrence.
Renewal with increased thickness and/or appropriate reinforcement should be considered in conjunction with appropriate corrosion protective measures.

3.2 Deformations

3.2.1 The cause of damage should always be identified. If the damage is due to negligence in operation, the ship representative should be notified. If the deformation is caused by inadequate structural strength, appropriate reinforcement should be considered. Where the deformation is related to corrosion, appropriate corrosion protective measures should be considered.

3.3 Fractures

3.3.1 If the cause of the fracture is fatigue under the action of cyclic wave loading, consideration should be given to the improvement of structural detail design, such as provision of soft toe bracket, to reduce stress concentration. If the fatigue fracture is vibration related, the damage is usually associated with moderate stress levels at high cycle rate, improvement of structural detail may not be effective. In this case, measures for increasing structural damping and avoidance of resonance, such as providing additional stiffening, may be considered.

Where fracture occurs due to material under excessive stress, indicating inadequate structural strength, renewal with thicker plate and/or providing appropriate reinforcement should be considered.

Where fracture is found in the transition region, measures for reducing the stress concentration due to structural discontinuity should be considered.

BULK CARRIERS	Guidelines for Surveys, Assessment and Repair of Hull Structure	
Part 1	Cargo hold region	Example No.
Area 2	Topside tank structure	1
Detail of damage	Fractures around unstiffened lightening holes and manholes in wash bulkhead	

Sketch of damage

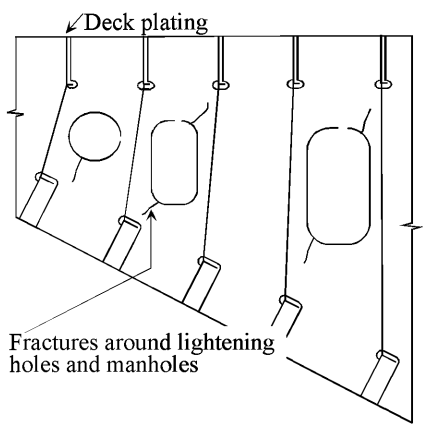

Sketch of repair

Repair A

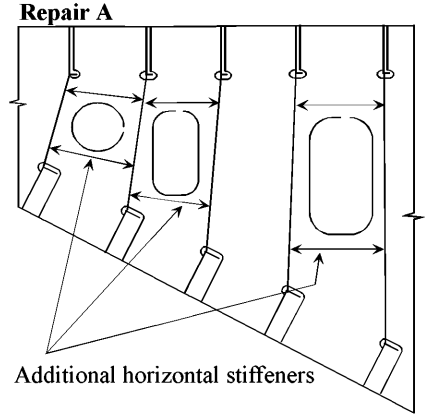

Repair C

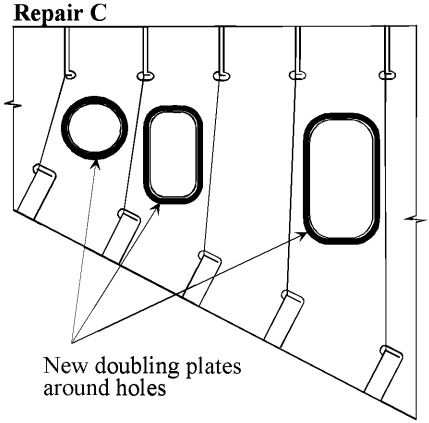

Repair B

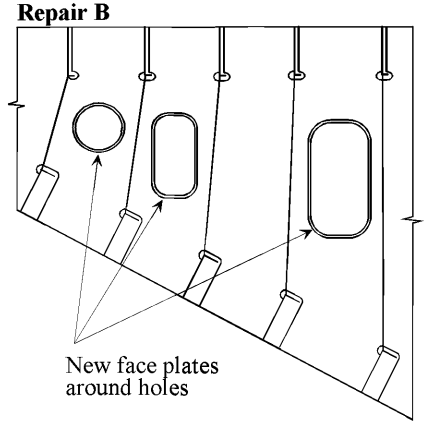

Notes on possible cause of damage

1. General levels of corrosion and presence of stress concentration.

Notes on repairs

1. Corroded/fractured plate should be cropped and renewed with plating of enhanced thickness.
2. Reinforcement should be considered.

BULK CARRIERS	Guidelines for Surveys, Assessment and Repair of Hull Structure	
Part 1	**Cargo hold region**	**Example No.**
Area 2	**Topside tank structure**	**2-a**
Detail of damage	Thinning and subsequent buckling of web plating in the vicinity of the radii of the opening	

Sketch of damage

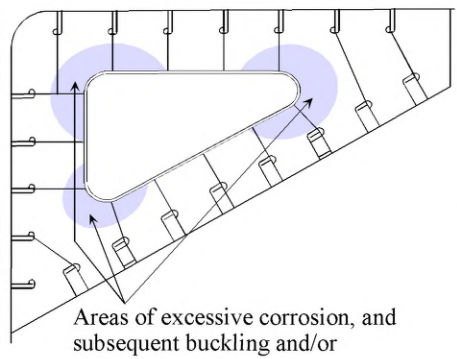

Sketch of repair

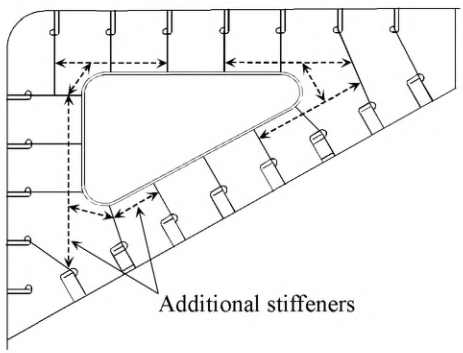

Notes on possible cause of damage

1. Insufficient buckling strength.
2. Corrosion due to stress concentration at corners.

Notes on repairs

1. Buckled plating is to be cropped and parts renewed, if necessary.
2. Additional stiffeners as shown above and/or renewal with plating of increased thickness should be considered.

BULK CARRIERS	Guidelines for Surveys, Assessment and Repair of Hull Structure	
Part 1	Cargo hold region	Example No.
Area 2	Topside tank structure	2-b
Detail of damage	Thinning and subsequent buckling of web plating in the vicinity of the radii of the opening	

Sketch of damage

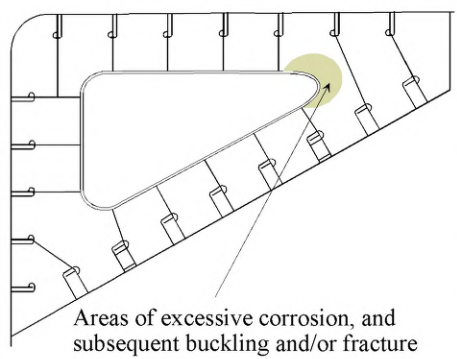

Sketch of repair

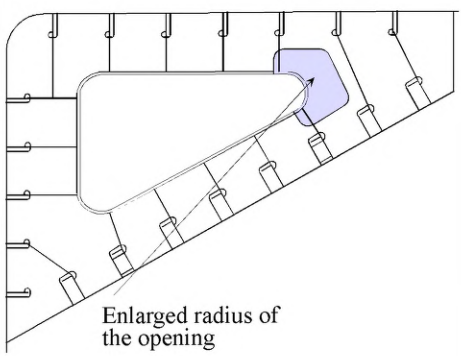

Notes on possible cause of damage

1. Corrosion caused by stress concentration at the corner due to insufficient radius for the opening.

Notes on repairs

1. Corroded/buckled plating is to be cropped and parts renewed with plating of increased thickness and additional stiffeners are preferable to minimize deflection.
2. An attempt should be made to improve the design of the radius if felt necessary.

BULK CARRIERS	Guidelines for Surveys, Assessment and Repair of Hull Structure	
Part 1	**Cargo hold region**	**Example No.**
Area 2	**Topside tank structure**	**2-c**
Detail of damage	Thinning and subsequent buckling of web plating in the vicinity of the radii of the opening	

Sketch of damage

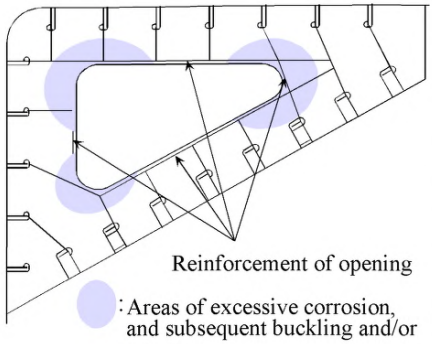

Sketch of repair

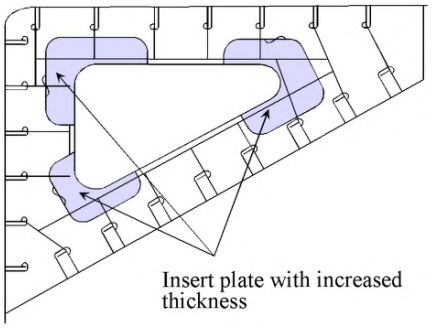

Notes on possible cause of damage

1. Additional stresses at the free edge of transverse web. (In **Example 2-a - 2-c** face plate is provided for the reinforcement of the opening.)

Notes on repairs

1. Corroded/buckled plating is to be cropped and part renewed with plating of increased thickness.

BULK CARRIERS	Guidelines for Surveys, Assessment and Repair of Hull Structure	
Part 1	**Cargo hold region**	**Example No.**
Area 2	**Topside tank structure**	**3**
Detail of damage	Fractures in transverse web at sniped end of stiffener	

Sketch of damage

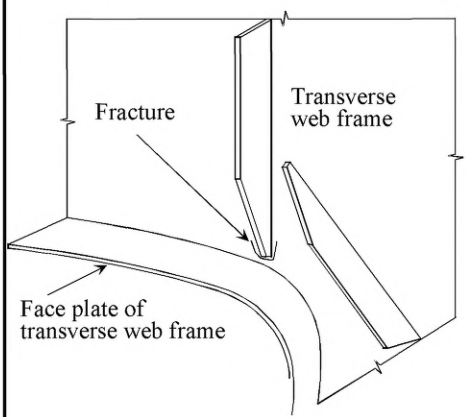

Sketch of repair

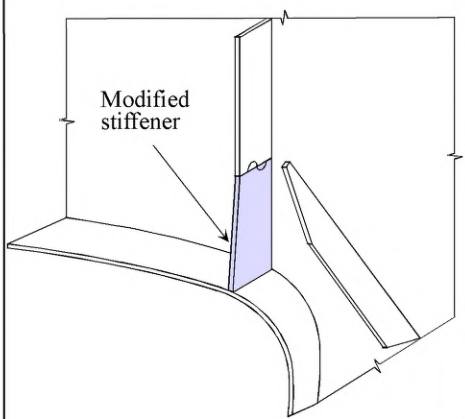

Notes on possible cause of damage

1. Stress concentration.

Notes on repairs

1. Fracture can be veed-out and welded provided the plating is not generally corroded. If necessary, fractured plating should be cropped and renewed.
2. Excessive stress concentration at the end of stiffener should be avoided.

BULK CARRIERS	Guidelines for Surveys, Assessment and Repair of Hull Structure	
Part 1	**Cargo hold region**	**Example No.**
Area 2	**Topside tank structure**	**4-a**
Detail of damage	Fractures at slots in way of transverse web frame	

Sketch of damage

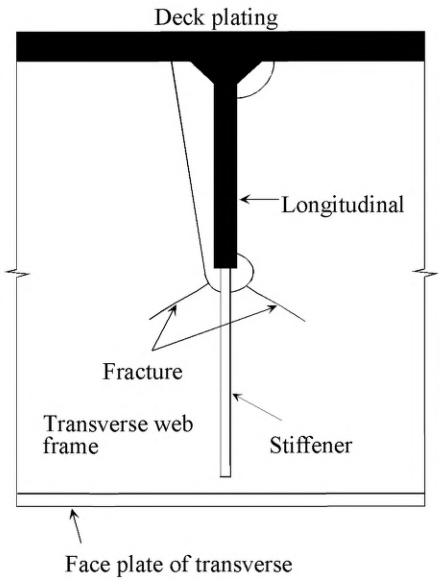

Sketch of repair

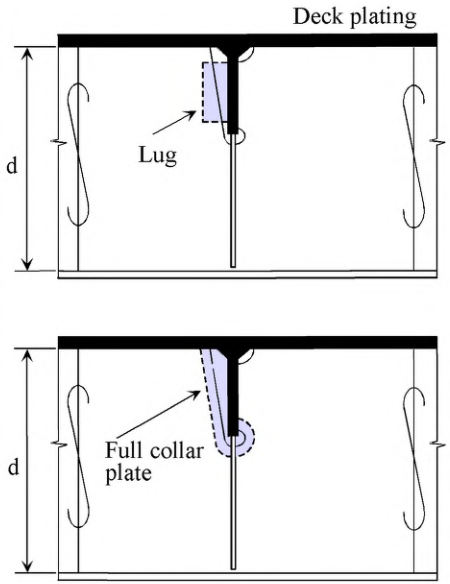

(Note) Full collar plate where the depth of cut-out is more than 0.4 times the depth of web frame (0.4d) and in an areas of high shear stress

Notes on possible cause of damage

1. Damage may be created by local shear stress concentrations due to large cut-outs for notch.
2. Also deficient welds (fillet welds between deck longitudinal and stiffener).

Notes on repairs

1. Crop and part renew the web plating.
2. Close the cut-out by introducing a lug or alternatively fit a full collar plate.

BULK CARRIERS	Guidelines for Surveys, Assessment and Repair of Hull Structure	
Part 1	**Cargo hold region**	**Example No.**
Area 2	**Topside tank structure**	**4-b**
Detail of damage	Fractures and buckling at slots in way of transverse web frame	

Sketch of damage

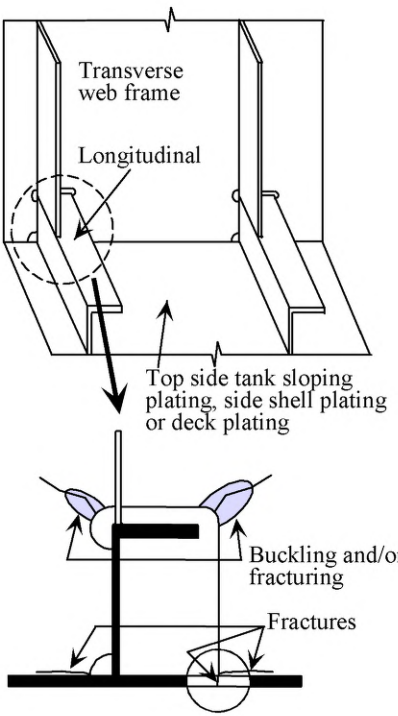

Sketch of repair

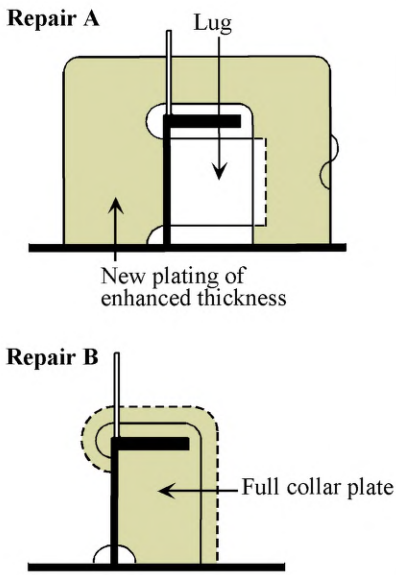

Notes on possible cause of damage

1. Damage can be caused by general levels of corrosion and presence of stress concentration associated with the presence of a cut-out.

Notes on repairs

1. If fractures are significant then crop and part renew the plating otherwise the fracture can be veed-out and welded provided the plating is not generally corroded.
2. **Repair A** Lug should be considered.
3. **Repair B** Full collar plate should be considered where the depth of cut-out is more than 0.4 times the depth of web frame and in an area of high shear stress or the existing lug proves to be ineffective.

BULK CARRIERS	Guidelines for Surveys, Assessment and Repair of Hull Structure	
Part 1	**Cargo hold region**	**Example No.**
Area 2	**Topside tank structure**	**5**
Detail of damage	Fractures in longitudinal at transverse web frame or bulkhead	

Sketch of damage

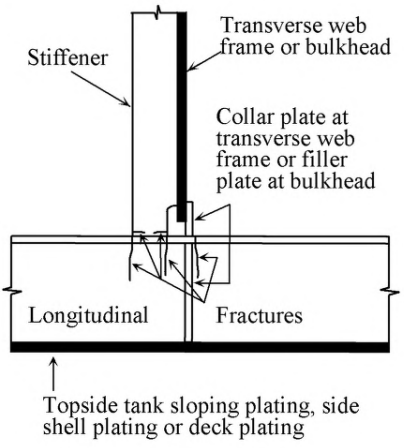

Sketch of repair

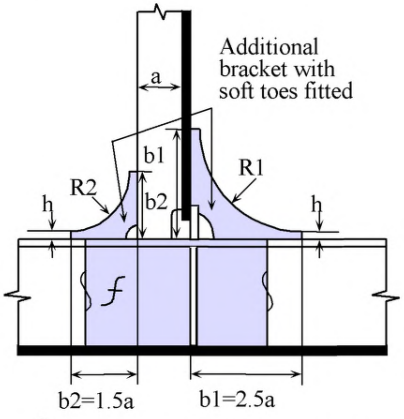

f: Where required, the longitudinal to be cropped and part renewed

1. For a slope at toes max. 1:3, R1=(b1-h)x 1.6 and R2=(b2-h)x 1.6
2. Soft toe bracket to be welded first to longitudinal
3. Scallop in bracket to be as small as possible, recommended max. 35mm
4. If toes of brackets are ground smooth, full penetration welds in way to be provided
5. Maximum length to thickness ratio =50:1 for unstiffened bracket edge
6. Toe height, h, to be as small as possible (10-15mm)

Notes on possible cause of damage

1. Damage can be caused by stress concentrations leading to accelerated fatigue in this region.

Notes on repairs

1. If fracture extends to over one third of the depth of the longitudinal, then crop and part renew. Otherwise the fracture can be veed-out and welded.

BULK CARRIERS	Guidelines for Surveys, Assessment and Repair of Hull Structure	
Part 1	**Cargo hold region**	**Example No.**
Area 2	**Topside tank structure**	**6**
Detail of damage	Fractures in the lowest longitudinal at transverse web frame	

Sketch of damage

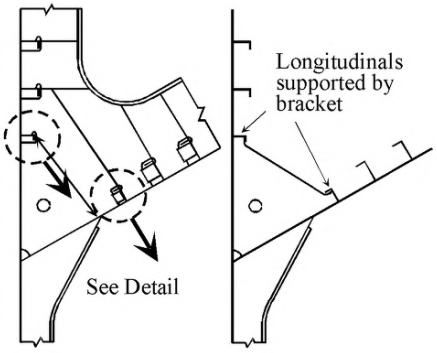

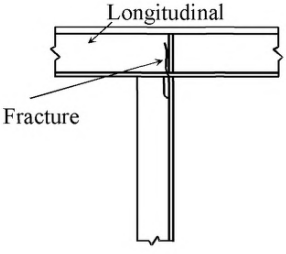

Detail

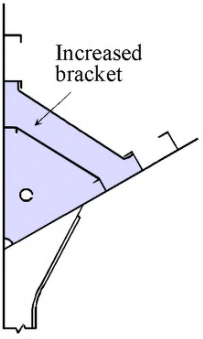

Notes on possible cause of damage

1. Insufficient scantling for torsional rigidity (The lowest longitudinal is usually supported by bracket(s) as shown in the above and smaller scantling may be adopted. However, the lowest longitudinal undergoes torsion from side shell frame through bracket(s) and may suffer fracture.)

Notes on repairs

1. Fractured part to be cropped and renewed.
2. Size of bracket should be increased

BULK CARRIERS	Guidelines for Surveys, Assessment and Repair of Hull Structure	
Part 1	**Cargo hold region**	**Example No.**
Area 2	**Topside tank structure**	**7-a**
Detail of damage	Fractures in transverse brackets	

Sketch of damage

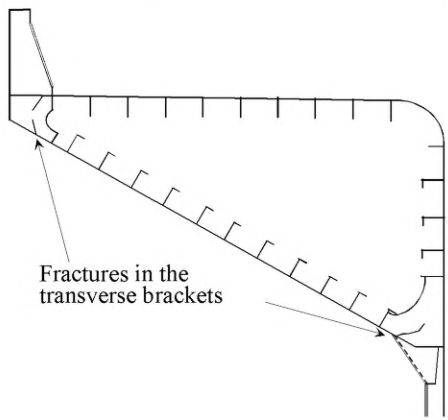

Sketch of repair

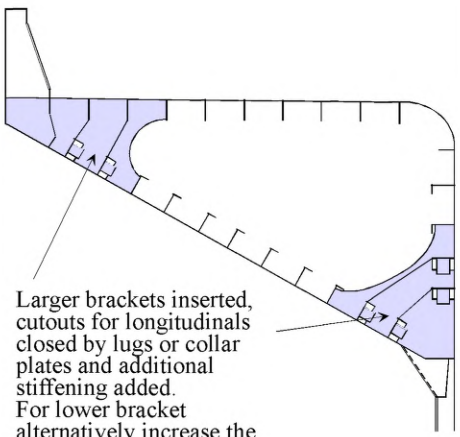

Notes on possible cause of damage

1. General levels of corrosion and presence of stress concentrations.
2. Misalignment of the brackets with adjoining structure, e.g. side shell frame brackets and/or coaming brackets.
3. High shear stresses due to insufficient bracket size.
4. Inadvertent overloading.

Notes on repairs

1. If the damage is caused by misalignment with the side shell frame brackets or the hatch coaming brackets the misalignment is to be rectified and the replacement by larger brackets incorporated only if considered necessary.

BULK CARRIERS	Guidelines for Surveys, Assessment and Repair of Hull Structure	
Part 1	Cargo hold region	Example No.
Area 2	Topside tank structure	7-b
Detail of damage	Fractures in transverse bracket	

Sketch of damage

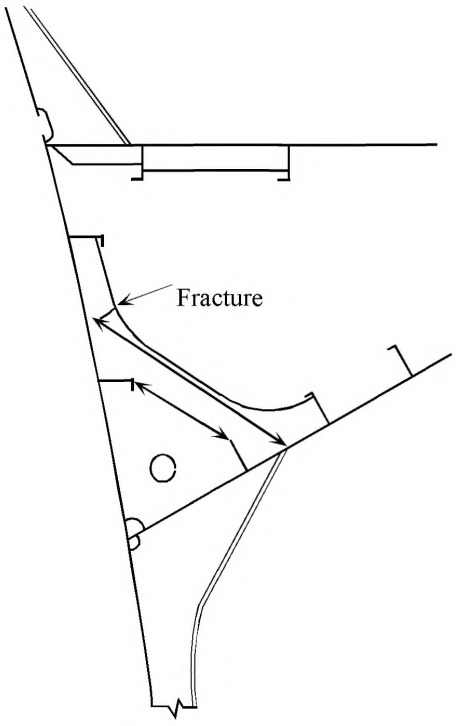

Sketch of repair

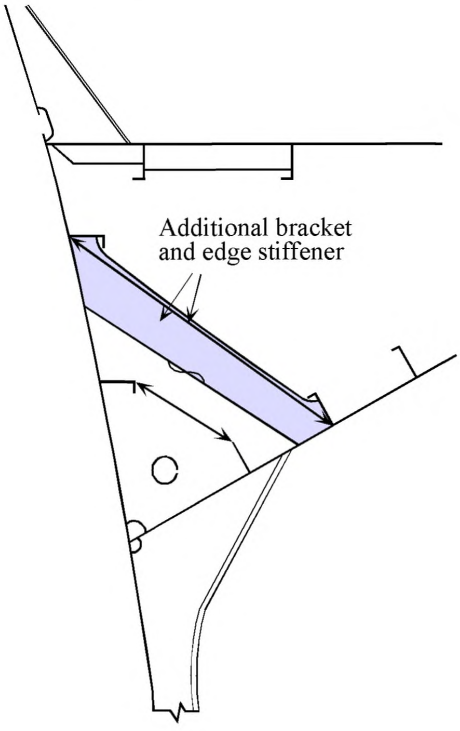

Notes on possible cause of damage

1. Insufficient strength.
2. Corrosion.

Notes on repairs

1. Fractured part to be cropped and renewed.
2. If the fractured part is free from corrosion, increased size and thickness should be considered. Partial renewal of the bracket may be accepted depending on the nature of the fracture.

BULK CARRIERS	Guidelines for Surveys, Assessment and Repair of Hull Structure	
Part 1	Cargo hold region	Example No.
Area 2	Topside tank structure	7-c
Detail of damage	Fractures at toes of transverse bracket	

Sketch of damage

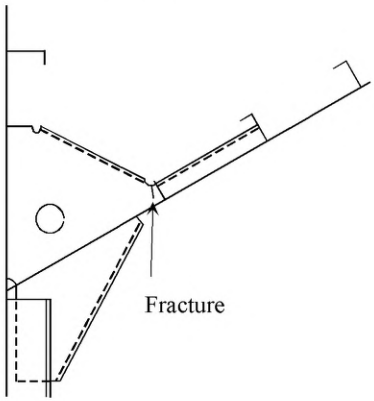

Sketch of repair

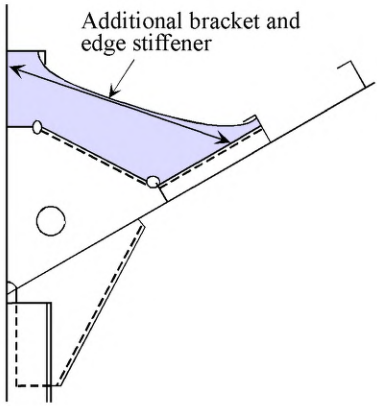

Notes on possible cause of damage

1. Stress concentration due to the shape of the bracket.

Notes on repairs

1. Cracked weld to be veed-out and rewelded.

BULK CARRIERS	Guidelines for Surveys, Assessment and Repair of Hull Structure	
Part 1	**Cargo hold region**	**Example No.**
Area 2	**Topside tank structure**	**8**
Detail of damage	Fractures in sloping plating and vertical strake initiated from the connection of topside tank to hatch end beam	

Sketch of damage

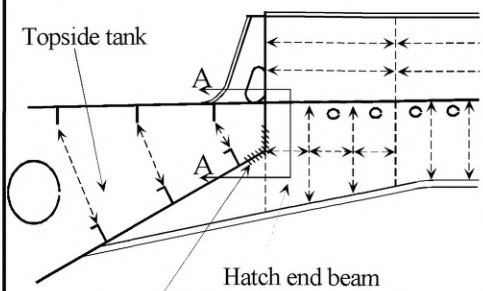

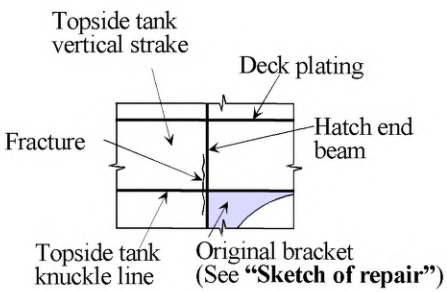

View A-A

Sketch of repair

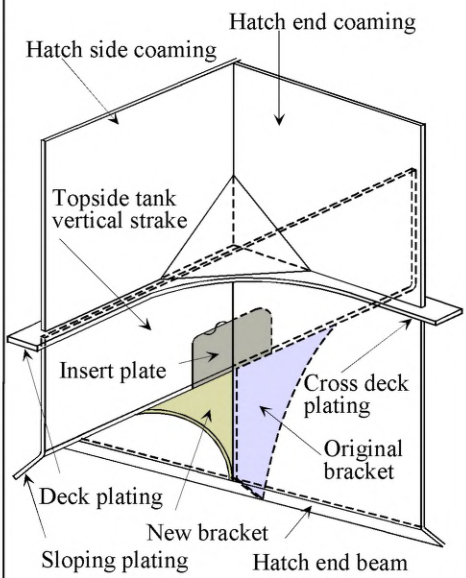

Notes on possible cause of damage

1. Stress concentration at the connection of hatch end beam to topside tank.

Notes on repairs

1. Fractured part to be cropped and renewed with increased thickness.
2. Additional bracket should be considered for reinforcement.

BULK CARRIERS	Guidelines for Surveys, Assessment and Repair of Hull Structure	
Part 1	Cargo hold region	Example No.
Area 2	Topside tank structure	9
Detail of damage	Fractures in sloping plating at knuckle	

Sketch of damage

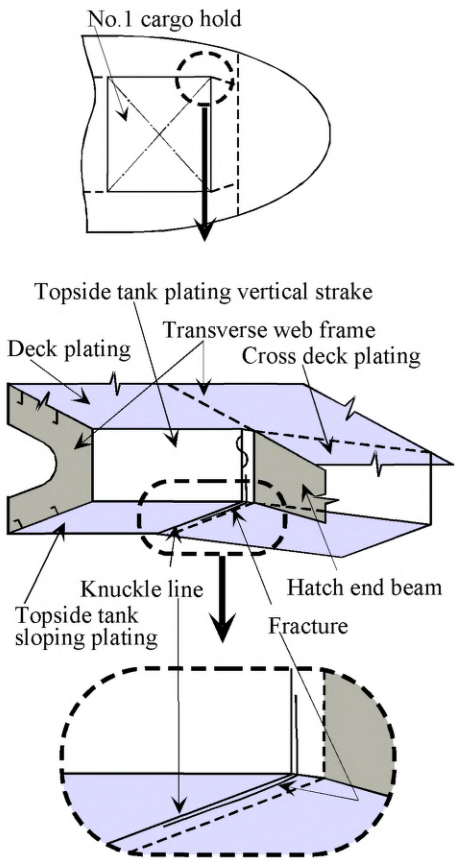

Sketch of repair

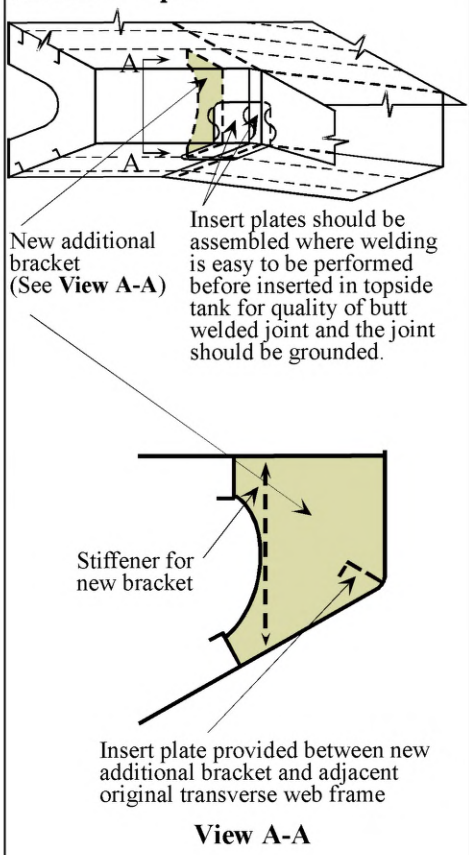

Notes on possible cause of damage

1. Insufficient strength.
2. Additional stress induced by knuckle.

Notes on repairs

1. Knuckle part should be reinforced appropriately.

BULK CARRIERS	Guidelines for Surveys, Assessment and Repair of Hull Structure	
Part 1	**Cargo hold region**	**Example No.**
Area 2	**Topside tank structure**	**10**
Detail of damage	Fractures in way of collision bulkhead at intersection with topside tank structure in foremost cargo hold	

Sketch of damage

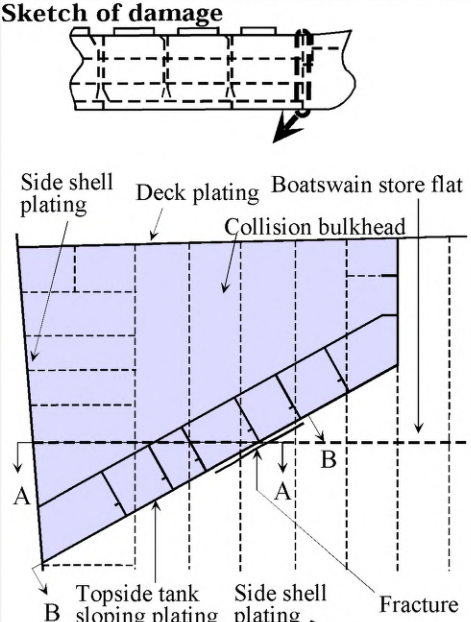

Sketch of repair

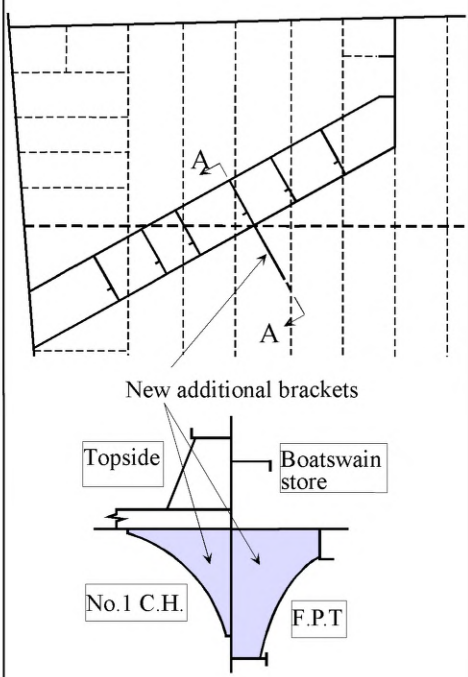

Notes on possible cause of damage

1. Damage caused by hard spot at intersection of the topside tank sloping plating and boatswain's store deck plating (fore peak tank top plating).

Notes on repairs

1. Fractured plates to be cropped and renewed.
2. Stress concentration should be considered (Brackets were fitted on both sides for reinforcement).

BULK CARRIERS	Guidelines for Surveys, Assessment and Repair of Hull Structure	
Part 1	Cargo hold region	Example No.
Area 2	Topside tank structure	11
Detail of damage	Fractures in way of engine room forward bulkhead at intersection with topside tank structure in aftermost cargo hold	

Sketch of damage

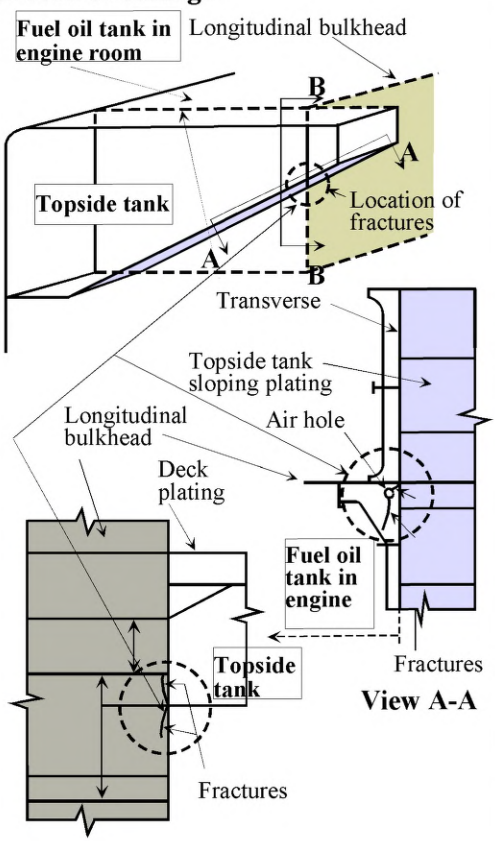

Sketch of repair

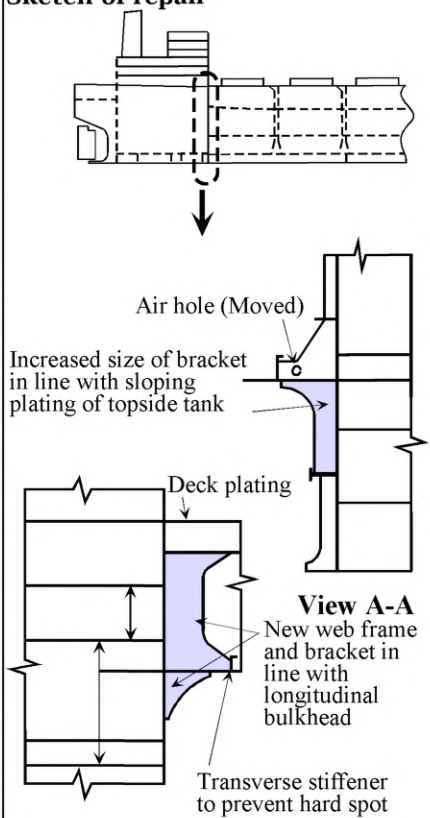

Notes on possible cause of damage

1. Damage caused by hard spot at intersection of the topside tank sloping plating and longitudinal bulkhead of the fuel oil tank in engine room.

Notes on repairs

1. Fractured plates to be cropped and renewed as necessary and reinforcement fitted as shown shaded above. The position of the air-hole to be relocated.

Area 3 Cargo hold side structure

Contents

1 General

2 What to look for - Internal inspection
2.1 Material wastage
2.2 Deformations
2.3 Fractures

3 What to look for - External inspection
3.1 Material wastage
3.2 Deformations
3.3 Fractures

4 General comments on repair
4.1 Material wastage
4.2 Deformations
4.3 Fractures

Figures and/or Photographs - Area 3	
No.	**Title**
Figure 1	Side shell frame - Potential problems areas
Figure 2	Damages to side shell frame - Potential problem areas
Figure 3	Representative gauging locations on the side shell frame - Potential problem areas
Figure 4	Transition regions - Potential problem areas
Figure 5	Uniform corrosion of side shell frame
Photograph 1	Collapsed side shell frames
Photograph 2	Missing side shell structure

Examples of structural detail failures and repairs - Area 3	
Example No.	**Title**
1-a	Fractures in brackets at termination of frame
1-b	Fractures in side shell frame at bracket's toe
2	Fractures in side shell frame at bracket's toe
3	Fractures in side shell frame/lower bracket and side shell plating near hopper
4	Deformation of side shell plating
5	Adverse effect of corrosion on the frame of forward/afterward hold

Examples of structural detail failures and repairs - Area 3	
Example No.	**Title**
6	Buckling and fractures of side shell plating in foremost cargo hold
7	Fractures at the supporting brackets in way of the collision bulkhead
8	Fractures at the supporting brackets in way of the collision bulkhead with no side shell panting stringer in hold
9	Fractures in way of horizontal diaphragm in the connecting trunk between topside tank and hopper double bottom tank, on after side of collision bulkhead
10	Fractures in way of continuation/extension bracket in aftermost hold at the engine room bulkhead

1 General

1.1 In addition to contributing to the shear strength of the hull girder, the side shell forms the external boundary of a cargo hold and is naturally the first line of defense against ingress/leakage of sea water when the ship hull is subjected to wave and other dynamic loading in heavy weather. The integrity of the side structure is of prime importance to the safety of the ship and this warrants very careful attention during survey and inspection.

1.2 The ship side structure is prone to damage caused by contact with the quay during berthing and impacts of cargo and cargo handling equipment during loading and discharging operations.

1.3 The marine environment in association with the handling and characteristics of certain cargoes (e.g. wet timber loaded from sea water and certain types of coal) may result in deterioration of coating and severe corrosion of plating and stiffeners. This situation makes the structure more vulnerable when exposed to heavy weather.

1.4 Bulk carriers carry various cargoes and one of the common cargoes is coal, especially for large bulk carriers. Certain types of coal contains sulphur impurities and when they react with water produce sulfuric acid which can cause severe corrosion to the structure if suitable coating is not applied and properly maintained.

1.5 The structure at the transition regions at the fore and aft ends of the ship are subject to stress concentrations due to structural discontinuities. The side shell plating at the transition regions is also subject to panting. The lack of continuity of the longitudinal structure, and the increased slenderness and flexibility of the side structure, makes the structure at the transition regions more prone to fracture damages.

1.6 A summary of potential problem areas is shown in **Figures 1** - **4**. Examples of failure and damaged ship side structure are illustrated in **Photographs 1**- **2**.

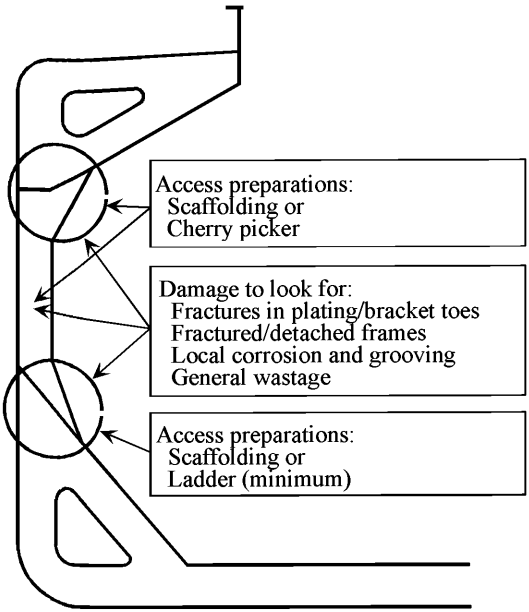

Figure 1
Side shell frame - Potential problem areas

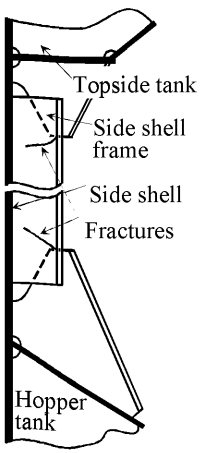

(a) Separate bracket configuration

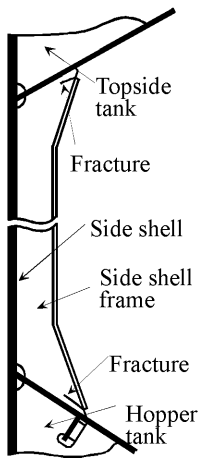

(b) Integral bracket configuration

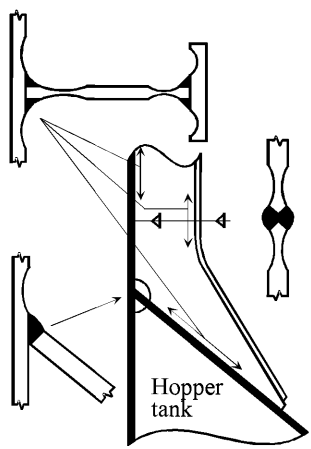

(c) Examples of grooving

Figure 2 Damages to side shell frame - Potential problem areas

(Note) The type of bracket configuration used will, to a large extent, dictate the location and extent of fracture. Where separate brackets are employed, the fracture location is normally at the bracket toe position on the frames, whereas with integral brackets the location is at the toe position on the hopper and topside tank.

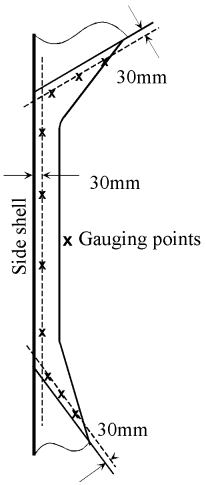

Figure 3
Representative gauging locations on the side shell frame - Potential problem areas

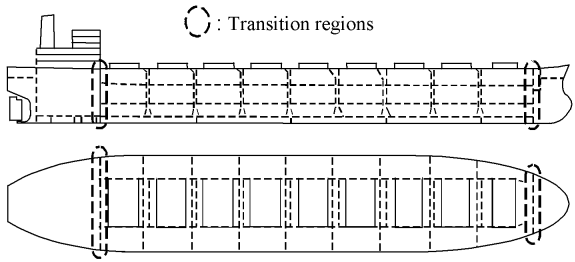

Figure 4 Transition regions - Potential problem area



Photograph 1 **Collapsed side shell frames (See Example 4)**



Photograph 2 **Missing side shell structure (See Examples 4 and 5)**

2 What to look for - Internal inspection

2.1 Material wastage

2.1.1 Attention is drawn to the fact that side shell frames may be significantly weakened by loss of thickness although diminution and deformations may not be apparent. Inspection should be made after the removal of any scale or rust deposit. Thickness measurements may be necessary, particularly if the corrosion is smooth and uniform, to determine the condition of the structure (See **Figure 5**).

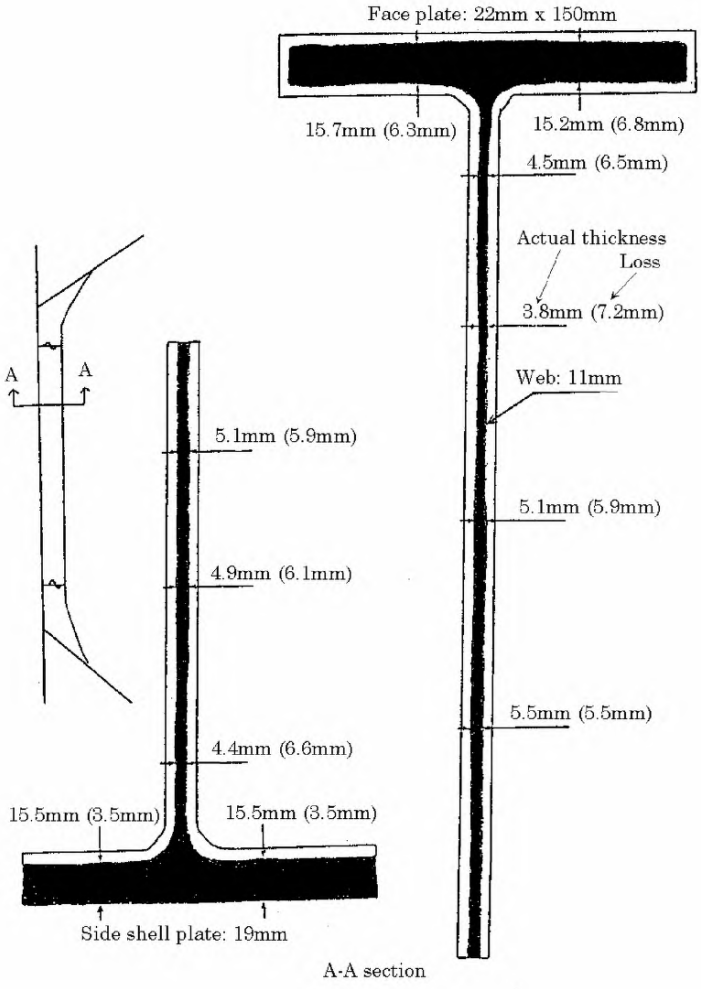

Figure 5 Uniform corrosion of side shell frame

2.1.2 It is not unusual to find highly localised corrosion on uncoated side shell frames and their end connections. The loss in the thickness is normally greater close to the side shell plating rather than near the faceplate, and consequently representative thickness measurements should be in that area (See **Figure 3**). This situation, if not remedied, can result in loss of support to the shell plating and hence large inboard deflections. In many cases such deflections of the side shell plating can generate fractures in the shell plating and fracturing and buckling of the frame web plates and eventually result in detachment of the end brackets from the hopper tank.

2.1.3 Heavy wastage and possible grooving of the framing in the forward/aft hold, where side

shell plating is oblique to frames, may result in fracture and buckling of the shell plating as shown in **Example 5**.

2.1.4 Pitting corrosion may be found under coating blisters which need to be removed before inspection.
It should be noted that the middle part of a frame may be wasted even if the upper and / or lower parts of the frame are not.
The following should be considered (and may be included as a surveyor's checklist):

- Hold Frame scantling drawings for each hold and allowable diminution level
- Repair history of Hold Frames
- Previous thickness measurement reports.
- Diminution of Hold Frames would normally be equal or greater than that of transverse cargo hold bulkheads.
- Note history of cargoes carried, especially that of coal or similar corrosive cargo.
- Record of any coating previously applied.
- Safe means of survey access (staging / cherry picker / portable ladder etc.)

Visual examination should take account of the following:

- The diminution of the face plate can be an indication of diminution level on the webs.
- Thickness of the Web may be estimated from edge condition of scallops.
- Fillet welding between Web and Shell plate and heat affected zone
- Fillet welding between Web and Face plate and heat affected zone
- Fillet welding between Upper Bracket and Top side tank, between Lower Bracket and Bilge Hopper Tank and heat affected zone
- Scallop at Upper and Lower part of Web

Experience with Bulk Carriers 100,000 dwt and above has shown that side shell frames in No.3 hold are more susceptible to damages. Therefore it is recommended that side shell frames in this hold are specially considered.

2.2 Deformations

2.2.1 It is normally to be expected that the lower region of the frames will receive some level of damage during operational procedures, e.g. when unloading with the aid of grabs and bulldozers or during loading of logs. This can range from damage of the side frame end bracket face plates to large physical deformations of a number of frames and in some cases can initiate fractures.

These individual frames and frame brackets, if rendered ineffective, will place additional load on the adjacent frames and failure by the "domino effect" can in many cases extend over the side shell of a complete hold.

2.3 Fractures

2.3.1 Fractures are more evident at the toes of the upper and lower bracket(s) or at the connections between brackets and frames. In most cases the fractures may be attributed to stress concentrations and stress variations created, in the main, by loads from the seaway. The stress concentrations can be a result of poor detail design and/or bad workmanship. Localised fatigue fracturing, possibly in association with localised corrosion, may be difficult to detect and it is stressed that the areas in question should receive close attention during periodical surveys.

2.3.2 Fractures are more often found at the boundary structure of a cargo/ballast hold than other cargo holds. This area should be subjected to close-up examination.

2.3.3 Fractures in shell plating and supporting or continuation/extension brackets at collision bulkhead and engine room forward bulkhead are frequently found by close-up examination.

3 What to look for – External inspection

3.1 Material wastage

3.1.1 The general condition with regard to wastage of the ship's sides may be observed by visual inspection from the quay side of the area above the waterline. Special attention should be paid to areas where the painting has deteriorated.

3.2 Deformations

3.2.1 The side shell should be carefully inspected with respect to possible deformations. The side shell below water line can usually only be inspected when the ship is dry docked. Therefore special attention with respect to possible deformations should be paid during dry-docking. When deformation of the shell plating is found, the area should also be inspected internally since even a small deformation may indicate serious damage to the internal structure.

3.2.2 Side shell plating in foremost cargo hold may suffer buckling. Since the shell plating in fore body has curvature in longitudinal direction due to the slenderness, external loads, such as static and dynamic water pressure cause compressive stress in side shell. Therefore the ships of which side shell plating is high tensile steel or has become thin due to corrosion may suffer buckling resulting in fracture along collision bulkhead or side shell frames.

3.3 Fractures

3.3.1 Fractures in the shell plating above and below the water line in way of ballast tanks may be detected during dry-docking as wet area in contrast to otherwise dry shell plating.

4 General comments on repair

4.1 Material wastage

4.1.1 In general, where part of the hold framing and/or associated end brackets have deteriorated to the permissible minimum thickness level, the normal practice is to crop and renew the area affected. However, if the remaining section of the frames/brackets marginally remain within the allowable limit, surveyors should request that affected frames and associated end brackets be renewed. Alignment of end brackets with the structure inside hopper tank or topside tank is to be ensured. It is recommended that repaired areas be coated.

4.1.2 If pitting intensity is lower than 15% in area (see **Figure 6**), pitting greater than ¼ of the original thickness can be welded flush with the original surface.
If deep pits are clustered together or remaining thickness is less than 6 mm, the plate should be renewed by plate inserting instead of repairing by welding.

4.2 Deformations

4.2.1 Depending on the extent of the deformation, the structure should be restored to its original shape and position either by fairing in place or by cropping and renewing the affected structure.

4.3 Fractures

4.3.1 Because of the interdependence of structural components it is important that all fractures and other significant damage to the side shell, frames and their end brackets, however localised, are repaired.

4.3.2 Fractured part of supporting brackets and continuation/extension brackets at collision bulkhead, deep tank bulkheads, and engine room bulkhead are to be part renewed with consideration given to the modification of the shape and possible extension of the brackets to reduce stress concentration. Affected shell plating in way of the damaged brackets should be cropped and renewed.

4.3.3 Repair of fractures at the boundary of a cargo hold should be carefully considered, taking into account necessary structural modification, enhanced scantlings and material, to prevent recurrence of the fractures.

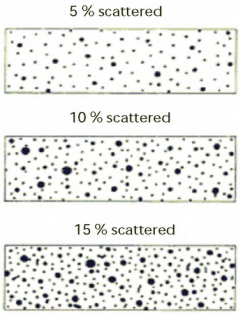

Figure 6 Pitting intensity diagrams (from 5% to 15% intensity)

BULK CARRIERS	Guidelines for Surveys, Assessment and Repair of Hull Structure	
Part 1	Cargo hold region	Example No.
Area 3	Cargo hold side structure	1-a
Detail of damage	Fractures in brackets at termination of frame	

Sketch of damage

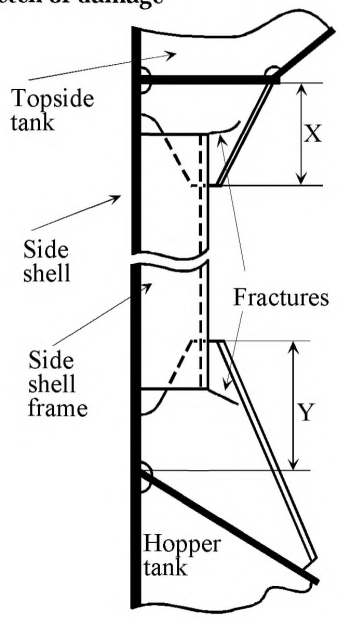

Separate bracket configuration

Sketch of repair

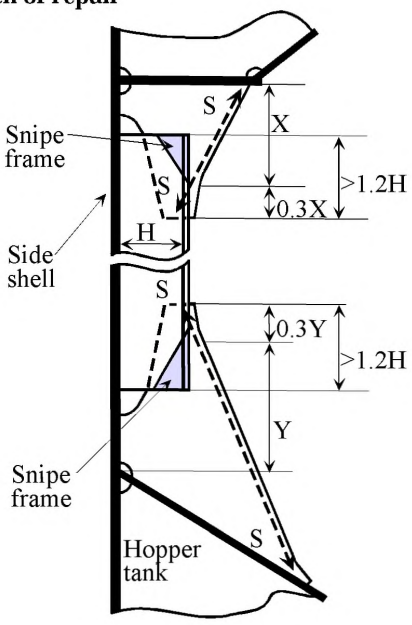

S=Snipped end

Notes on possible cause of damage

1. This type of damage is caused due to stress concentration.

Notes on repairs

1. For small fractures, e. g. hairline fractures, the fracture can be veed-out, ground, examined by NDT for fractures, and rewelded.
2. For larger/significant fractures consideration is to be given to cropping and partly renewing/ renewing the frame brackets. If renewing the brackets, end of frames can be sniped to soften them.
3. If felt prudent, soft toes are to be incorporated at the boundaries of the bracket to the hopper plating.
4. Attention to be given to the structure in wing tanks in way of the extended bracket arm. i.e. reinforcement provided in line with the bracket.

BULK CARRIERS	Guidelines for Surveys, Assessment and Repair of Hull Structure	
Part 1	Cargo hold region	Example No.
Area 3	Cargo hold side structure	1-b
Detail of damage	Fractures in side shell frame at bracket's toe	

Sketch of damage

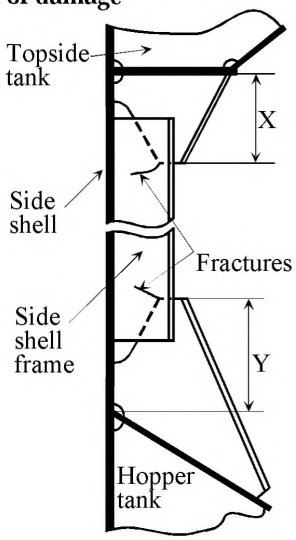

Separate bracket configuration

Sketch of repair

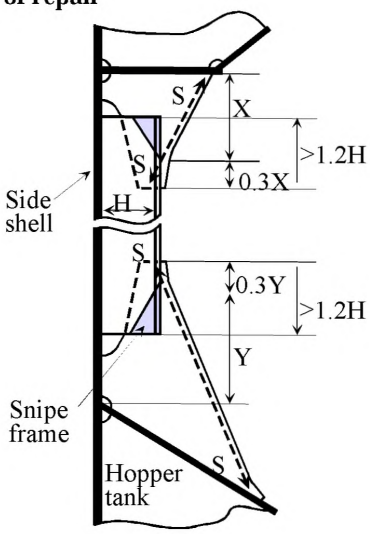

S=Snipped end

Notes on possible cause of damage

1. This type of damage is caused due to stress concentration.

Notes on repairs

1. For small fractures, e. g. hairline fractures, the fracture can be veed-out, welded up, ground, examined by NDT for fractures, and rewelded.
2. For larger/significant fractures consideration is to be given to cropping and partly renewing/ renewing the frame brackets. If renewing the brackets, end of frames can be sniped to soften them.
3. If felt prudent, soft toes are to be incorporated at the boundaries of the bracket to the hopper plating.
4. Attention to be given to the structure in wing tanks in way of the extended bracket arm. i.e. reinforcement provided in line with the bracket.

BULK CARRIERS	Guidelines for Surveys, Assessment and Repair of Hull Structure	
Part 1	Cargo hold region	Example No.
Area 3	Cargo hold side structure	2
Detail of damage	Fractures in side shell frame at bracket's toe	

Sketch of damage

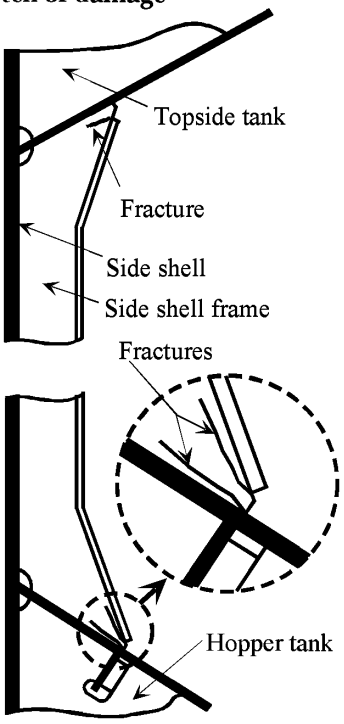

Sketch of repair

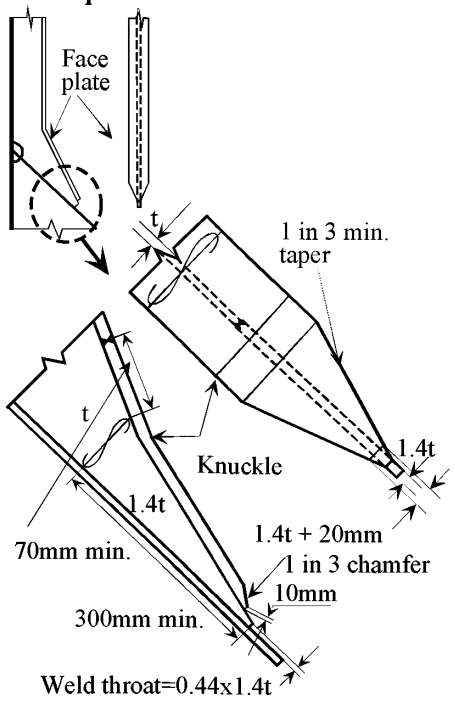

Notes on possible cause of damage

1. This type of damage is caused due to stress concentration.

Notes on repairs

1. Repair is to incorporate a design similar to the one shown on the sketch and in addition:-
   - 1.1. The arm of the bracket along the hopper/ topside plating should be increased by altering the angle of the bracket face plate. A face plate taper of 1 in 3 should be arranged.
   - 1.2. The local thickness of the bracket web plating over the length of the new face plate taper should be increased by about 40% above that originally fitted.
   - 1.3. The face plate thickness should be chamfered 1 in 3 to a thickness at its extremity.
   - 1.4. Welding of the new bracket toe should be based on a weld factor of 0.44 applied to the increased thickness.
2. Attention to be given to the structure in wing tanks in way of the extended bracket arm. i.e. reinforcement provided in line with the bracket.

BULK CARRIERS	Guidelines for Surveys, Assessment and Repair of Hull Structure	
Part 1	Cargo hold region	Example No.
Area 3	Cargo hold side structure	3
Detail of damage	Fractures in side shell frame/lower bracket and side shell plating near hopper	

Sketch of damage

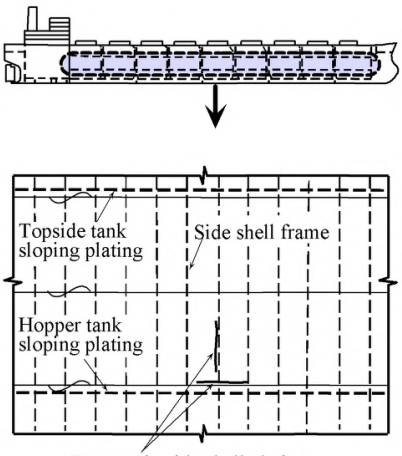

Sketch of repair

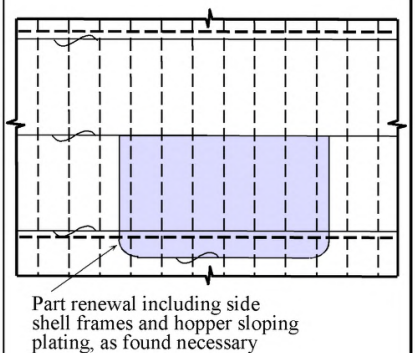

Notes on possible cause of damage

1. Heavy corrosion (grooving). Refer to **Figure 2 (c)**.

Notes on repairs

1. Sketch of repair applies when damage extends over several frames.
2. Isolated fractures may be repaired by veeing-out and rewelding.
3. Isolated cases of grooving may be repaired by build up of welding.

BULK CARRIERS	Guidelines for Surveys, Assessment and Repair of Hull Structure	
Part 1	Cargo hold region	Example No.
Area 3	Cargo hold side structure	4
Detail of damage	Deformation of side shell plating	

Sketch of damage

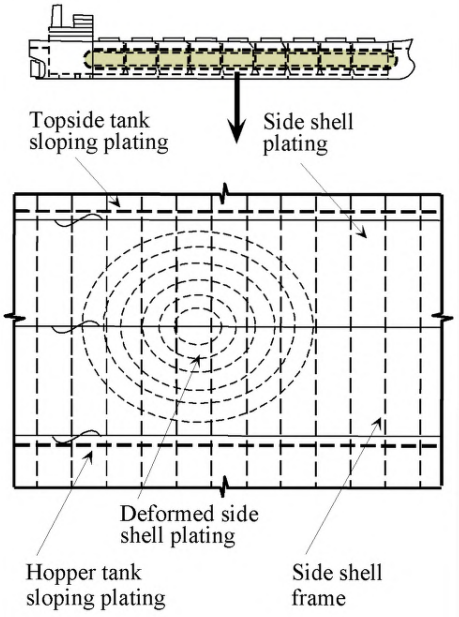

Sketch of repair

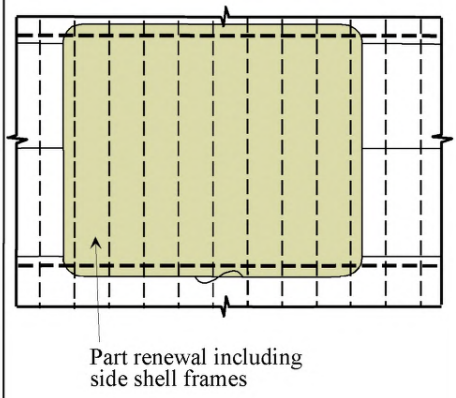

Notes on possible cause of damage

1. Insufficient stiffness of side shell frames due to buckling and/or detachment of side shell frames due to corrosion.
2. Heavy weather.

Notes on repairs

1. Deformed side shell plating including side shell frames should be cropped and renewed.

BULK CARRIERS	Guidelines for Surveys, Assessment and Repair of Hull Structure	
Part 1	Cargo hold region	Example No.
Area 3	Cargo hold side structure	5
Detail of damage	Adverse effect of corrosion on the frame of forward/afterward hold	

Sketch of damage

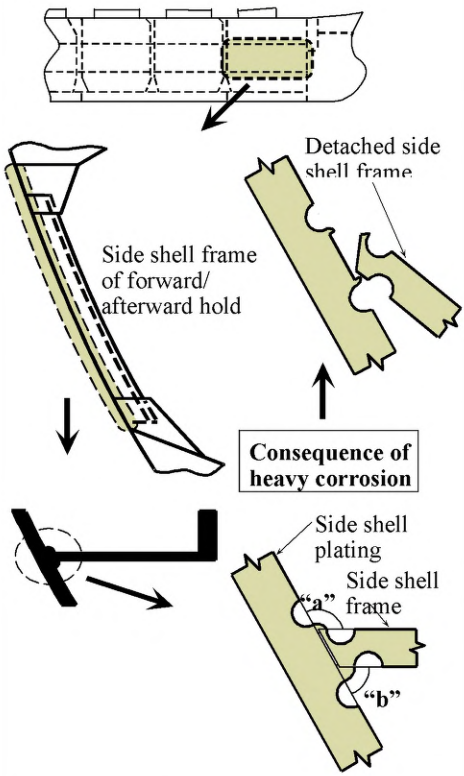

Sketch of repair

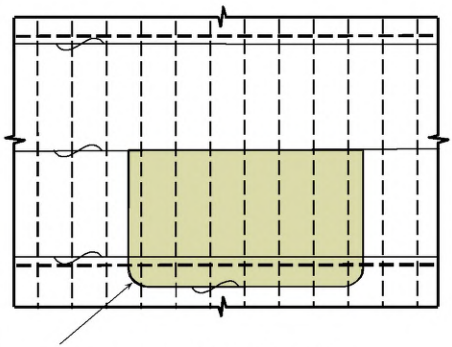

1. Part renewal including side shell frames and hopper plating, as found necessary
2. Deep penetration welding at the connections of side shell frames to side shell plating

Notes on possible cause of damage

1. Heavy corrosion (grooving) of side shell frame along side shell plating and difference of throat thickness "**a**" from "**b**". (Since original throat thickness of "**a**" is usually smaller than that of "**b**", if same welding procedure is applied, the same corrosion has a more severe effect on "**a**", and may cause collapse and/or detachment of side shell frame.)

Notes on repairs

1. Sketch of repair applies when damage extends over several frames.
2. Isolated fractures may be repaired by veeing-out and rewelding.
3. Isolated cases of grooving may be repaired by build up of welding.

BULK CARRIERS	Guidelines for Surveys, Assessment and Repair of Hull Structure	
Part 1	Cargo hold region	Example No.
Area 3	Cargo hold side structure	6
Detail of damage	Buckling and fractures of side shell plating in foremost cargo hold	

Sketch of damage

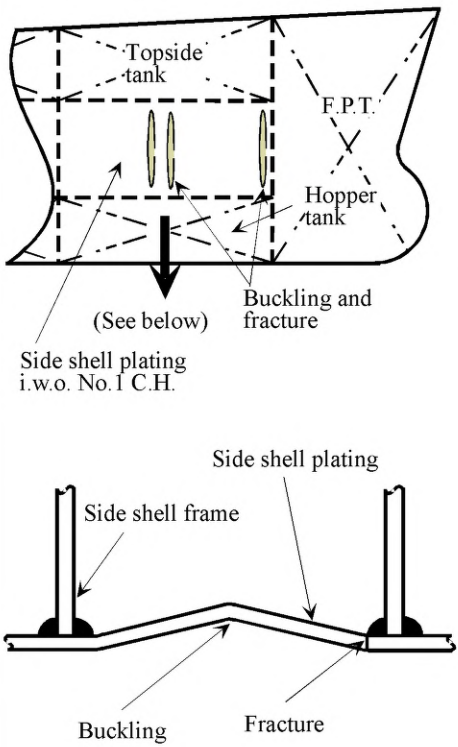

Sketch of repair

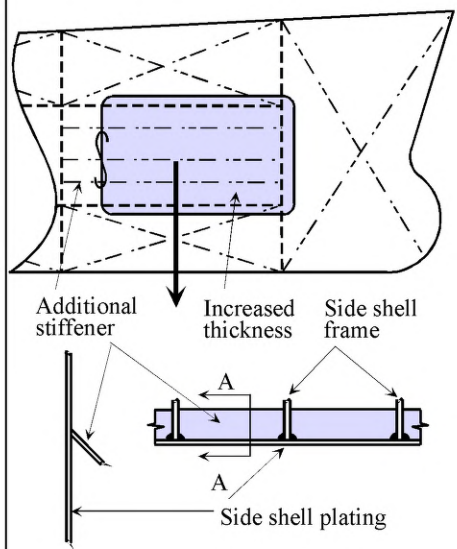

View A-A

Notes on possible cause of damage

1. Heavy weather.
2. Insufficient buckling strength due to high tensile steel or heavy uniform corrosion.
3. Inadequate transition structure.

Notes on repairs

1. Buckled/fractured side shell plating is to be cropped and renewed.
2. Reinforcement by thicker side shell plating and/or additional stiffeners should be considered.

BULK CARRIERS	Guidelines for Surveys, Assessment and Repair of Hull Structure	
Part 1	Cargo hold region	Example No.
Area 3	Cargo hold side structure	7
Detail of damage	Fractures at the supporting brackets in way of the collision bulkhead	

Sketch of damage

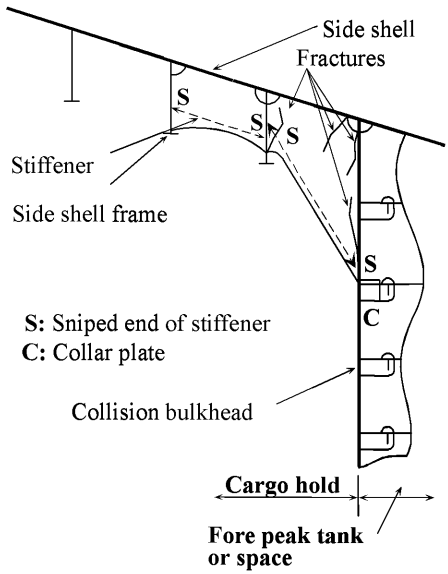

Sketch of repair

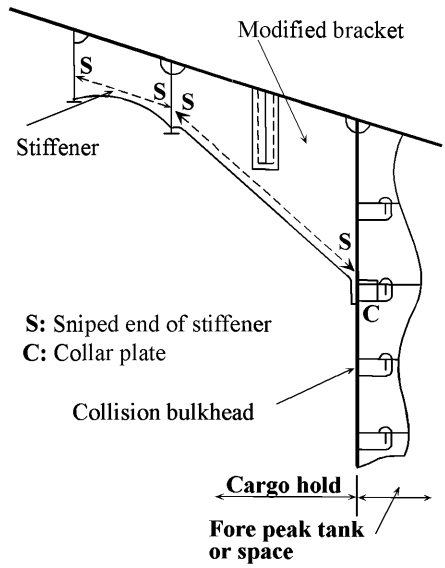

Notes on possible cause of damage

1. Insufficient bracket size resulting in high stress due to load cantilevered from side frame.
2. Stress concentration at toe of bracket and misalignment between bracket and stringer in fore peak tank or space.

Notes on repairs

1. The extended bracket arm connection to the collision bulkhead is to have a soft toe, and any cut-outs for stiffeners in the fore peak tank or space are to be collared when situated in the vicinity of the bracket toe.
2. When fractures have extended into the side shell or bulkhead plating, the plating is to be cropped and part renewed.

BULK CARRIERS	Guidelines for Surveys, Assessment and Repair of Hull Structure	
Part 1	Cargo hold region	Example No.
Area 3	Cargo hold side structure	8
Detail of damage	Fractures at the supporting brackets in way of the collision bulkhead with no side shell panting stringer in hold	

Sketch of damage

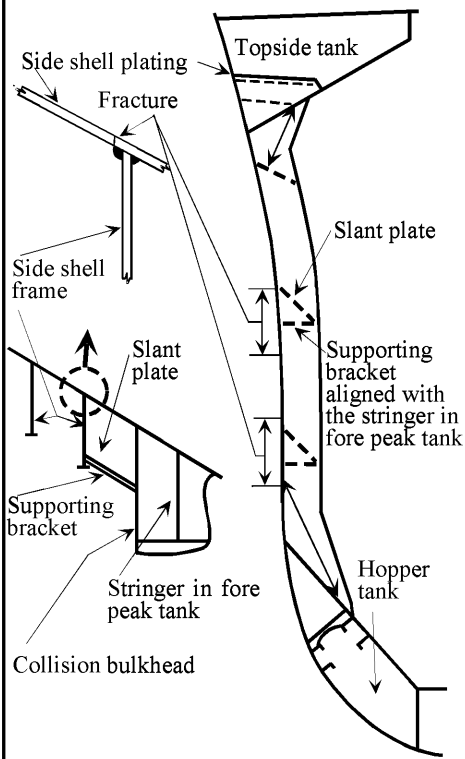

Sketch of repair

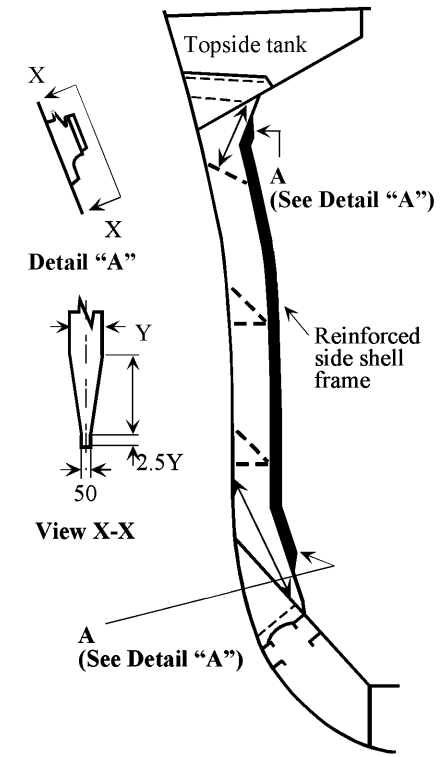

Notes on possible cause of damage

1. Damage caused by stress concentration leading to fatigue fracture in side shell. This has been exacerbated because of the greater flexibility of the hold structure in relation to the structure forward of the collision bulkhead.

Notes on repairs

1. Fractured shell plates to be cropped and part renewed, and side shell frame/frames in the vicinity of the damage to be reinforced as required by the relevant Classification Society.

BULK CARRIERS	Guidelines for Surveys, Assessment and Repair of Hull Structure	
Part 1	Cargo hold region	Example No.
Area 3	Cargo hold side structure	9
Detail of damage	Fractures in way of horizontal diaphragm in the connecting trunk between topside tank and hopper double bottom tank, on after side of collision bulkhead	

Sketch of damage

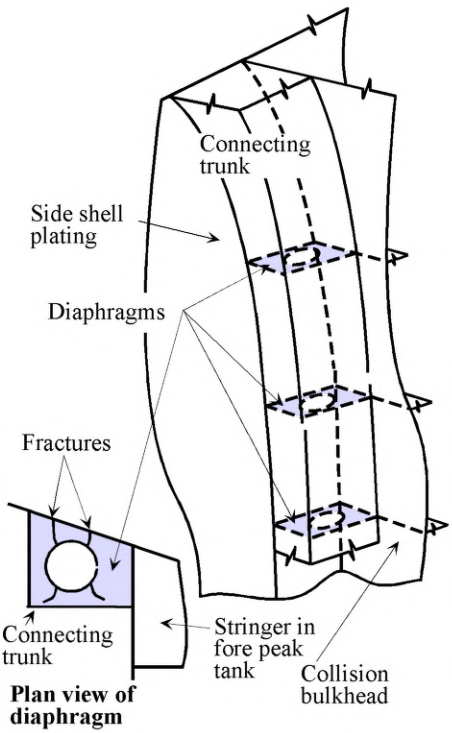

Sketch of repair

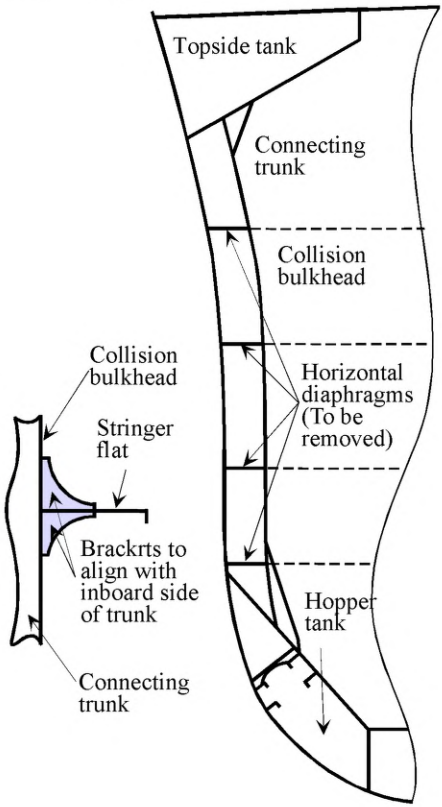

Notes on possible cause of damage

1. Damage caused by stress concentration resulting from the discontinuity created by the trunk and diaphragm structure. This has been exacerbated because of the greater flexibility of the hold structure in relation to the trunk and structure forward of the collision bulkhead.

Notes on repairs

1. Diaphragm to be removed permanently and fractured shell plated cropped and part renewed, or veed and weld as necessary in way of damage. Brackets with softened to toes are to be fitted on forward side of collision bulkhead in way of stringers/flats to align with inboard side of trunk in order to remove hard-spots.

BULK CARRIERS	Guidelines for Surveys, Assessment and Repair of Hull Structure	
Part 1	Cargo hold region	Example No.
Area 3	Cargo hold side structure	10
Detail of damage	Fractures in way of continuation/extension brackets in aftermost hold at the engine room bulkhead	

Sketch of damage

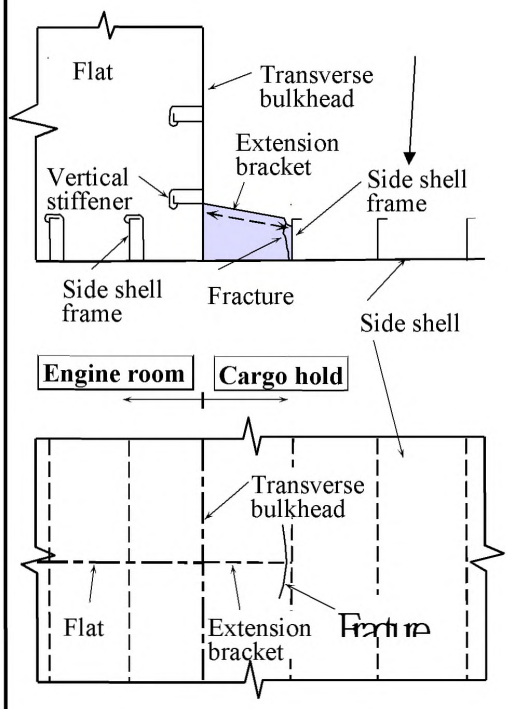

Sketch of repair

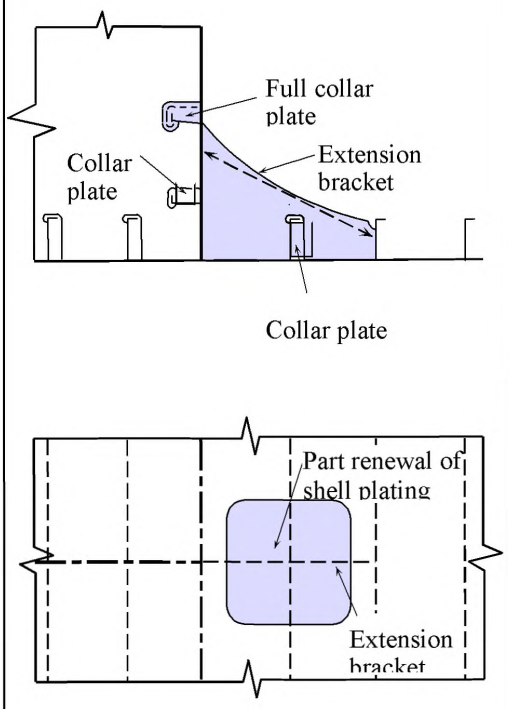

Notes on possible cause of damage

1. Damage caused by stress concentration leading to fatigue fracture on side shell. This will be exacerbated because of the greater flexibility of the hold structure in relation to the engine room structure.

Notes on repairs

1. The fractured shell plating is to be cropped and part renewed as necessary.
2. Extension bracket is to be modified and collar plates to cut-outs in engine room flat are to be installed.

Area 4 Transverse bulkhead including stool structure

Contents

1 General

2 What to look for - Hold inspection
2.1 Material wastage
2.2 Deformations
2.3 Fractures

3 What to look for - Stool inspection
3.1 Material wastage
3.2 Deformations
3.3 Fractures

4 General comments on repair
4.1 Material wastage
4.2 Deformations
4.3 Fractures

Figures and/or Photographs - Area 4	
No.	**Title**
Figure 1	Transverse bulkhead - Potential problems areas
Figure 2	Typical fracturing at the connection of transverse bulkhead structure
Photograph 1	Collapsed and detached transverse bulkhead

Examples of structural detail failures and repairs - Area 4	
Example No.	**Title**
1-a	Fractures at weld connections to stool shelf plate
1-b	Fractures at weld connections to stool shelf plate
2	Fractures at the upper boundaries to topside tank
3	Indentation and buckling of vertical corrugations
4	Fractures in the web of the corrugation initiating at intersection of adjacent shedder plates
5	Fractures at welded connections of lower stool plating to inner bottom plating in way of duct keel
6	Fractures at connection of lower stool to hopper
7	Buckling of strut supporting hatch end beam

1 General

1.1 The transverse bulkheads at the ends of dry cargo holds are mainly ordinary watertight bulkheads serving two main functions:

(a) As main transverse strength elements in the structural design of the ship.

(b) As subdivision to prevent progressive flooding in an emergency situation.

1.2 The transverse bulkheads at the ends of a combined ballast/ cargo hold are deep tank bulkheads which, in addition to the functions given in 1.1, are designed to withstand the water pressure from a hold fully filled with water ballast.

1.3 The bulkheads are commonly constructed as vertically corrugated with a lower stool, and with or without an upper stool (See **Chapter 3 Technical background for surveys - Figure 3 (b)**). Other constructions may be:
Plane bulkhead plating with one sided vertical stiffeners.
Double plated bulkhead with internal stiffening, with or without stool(s).

1.4 Dry cargo holds, not designed as ballast holds, may sometimes be partially filled with water ballast in order to achieve a satisfactory air draught at the loading/discharging berths.
The filling is restricted to a level that corresponds to the dry cargo hold scantlings, in particular the transverse bulkheads scantlings, and must only be carried out in port. In no case should these cargo holds be partially filled during voyage to save time at the berth. Such filling at sea may cause sloshing resulting in catastrophic failure such as indicated in **Photograph 1**.

1.5 Heavy corrosion may lead to collapse of the structure under extreme load, such as indicated in **Photograph 1** if it is not rectified properly.

1.6 A summary of potential problem areas is shown in **Figure 1**. It is emphasised that appropriate access arrangement as indicated in **Chapter 4 Survey planning, preparation and execution** of the guidelines, should be provided to enable a proper close-up inspection and thickness measurement as necessary.



Photograph 1
Collapsed and detached transverse bulkhead

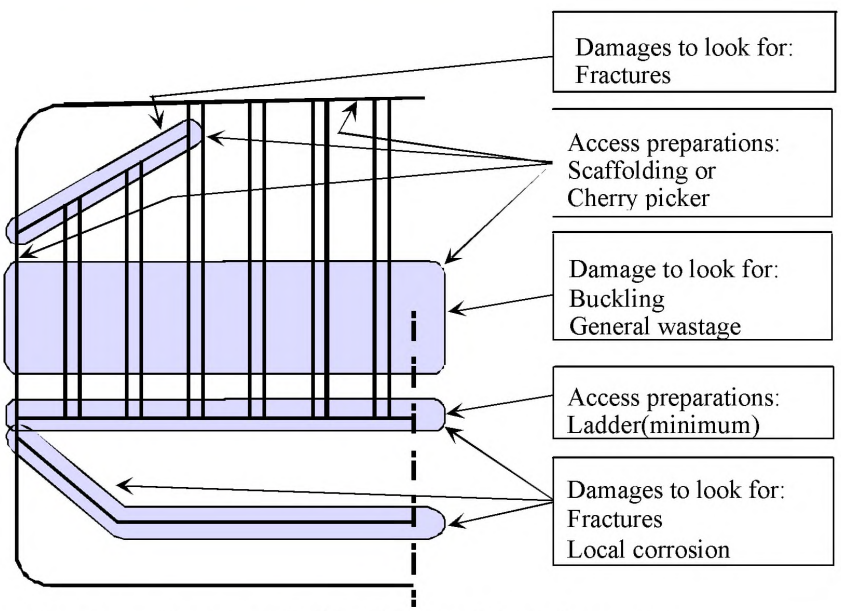

Figure 1 Transverse bulkhead - Potential problem areas

2 What to look for - Hold inspection

2.1 Material wastage

2.1.1 Excessive corrosion may be found in the following locations.

(a) At the mid-height and at the bottom of the bulkheads. The structure may look in deceptively good condition but in fact may be heavily corroded. The corrosion is created by the corrosive effect of cargo and environment, in particular when the structure is not coated.

(b) Bulkhead plating adjacent to the shell plating

(c) Bulkhead trunks which form part of the venting, filling and discharging arrangements between the topside tanks and the hopper tanks.

(d) Bulkhead plating and weld connections to the lower/upper stool shelf plates and inner bottom.

(e) In way of weld connections to topside tanks and hopper tanks.

2.1.2 If coatings have broken down and there is evidence of corrosion, it is recommended that random thickness measurements be taken to establish the level of diminution.

2.1.3 Where the terms and requirements of the periodical survey dictate thickness measurement, or when the surveyor deems necessary, it is important that the extent of the gauging be sufficient to determine the general condition of the structure.

2.2 Deformations

2.2.1 Deformation due to mechanical damage is often found in bulkhead structure.

2.2.2 When the bulkhead has sustained serious uniform corrosion, the bulkhead may suffer shear buckling. Evidence of buckling may be indicated by the peeling of paint or rust. However, where deformation resulting from bending or shear buckling has occurred on a bulkhead with a small diminution in thickness, this could be due to poor design or overloading and this aspect should be investigated before proceeding with repairs.

2.3 Fractures

2.3.1 Fractures usually occur at the boundaries of corrugations and bulkhead stools particularly in way of shelf plates, shedder plates, deck, inner bottom, etc. (See **Figure 2**).

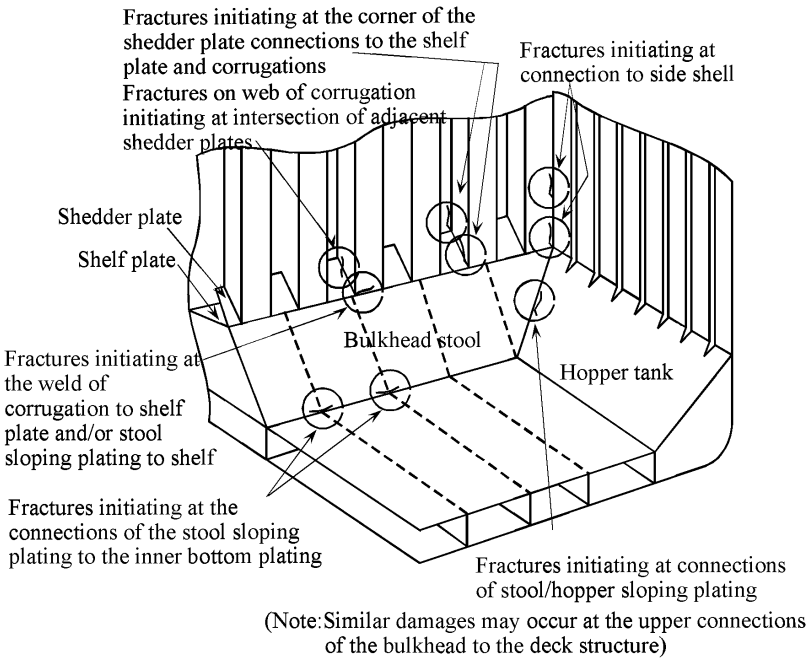

Figure 2 Typical fracturing at the connection of transverse bulkhead structure

3 What to look for - Stool inspection

3.1 Material wastage

3.1.1 Excessive corrosion may be found on diaphragms, particularly at their upper and lower weld connections.

3.2 Deformations

3.2.1 Damage to the stool structure should be checked when deformation due to mechanical damage is observed during hold inspection.

3.3 Fractures

3.3.1 Fractures observed at the connection between lower stool and corrugated bulkhead during hold inspection may have initiated at the weld connection of the inside diaphragms (See **Example 1**).

3.3.2 Misalignment between bulkhead corrugation flange and sloping stool plating may also cause fractures at the weld connection of the inside diaphragms (See **Example 2**).

4 General comments on repair

4.1 Material wastage

4.1.1 When the reduction in thickness of plating and stiffeners has reached the diminution levels permitted by the Classification Society involved, the wasted plating and stiffeners are to be cropped and renewed.

4.2 Deformations

4.2.1 If the deformation is local and of a limited extent, it could generally be faired out. Deformed plating in association with a generalized reduction in thickness should be partly or completely renewed.

4.2.2 Buckling of the bulkhead plating can also occur in way of the side shell resulting from contact damage and this is usually quite obvious. In such cases the damaged area is to be cropped and partly renewed. If the deformation is extensive, replacement of the plating, partly or completely, may be necessary. If the deformation is not in association with generalized reduction in thickness or due to excessive loading, additional strengthening should be considered.

4.3 Fractures

4.3.1 Fractures that occur at the boundary weld connections as a result of latent weld defects should be veed-out, appropriately prepared and re-welded preferably using low hydrogen electrodes or equivalent.

4.3.2 For fractures other than those described in **4.3.1**, re-welding may not be a permanent solution and an attempt should be made to improve the design and construction in order to obviate a recurrence. Typical examples of such cases are as follows:

(a) **Fractures in the weld connections of the stool plating to the shelf plate in way of the scallops in the stool's internal structure**

The scallops should be closed by fitting over-lap collar plates and the stool weld connections repaired as indicated in **4.3.1**. The over-lap collar should have a full penetration weld connection to the stool and shelf plate and should be completed using low hydrogen electrodes prior to welding the collar to the stool diaphragm/bracket.

(b) **Fractures in the weld connections of the corrugations and/or stool plate to the shelf plate resulting from misalignment of the stool plate and the flange of the corrugation (Similarly misalignment of the stool plate with the double bottom floor)**

It is recommended that the structure be released, the misalignment rectified, and the stool, floor and corrugation weld connection appropriately repaired as indicated in **4.3.1**. Other remedies to such damages include fitting of brackets in the stool in line with the webs of the corrugations. In such cases both the webs of the corrugations and the brackets underneath are to have full penetration welds and the brackets are to be arranged without scallops. However, in many cases this may prove difficult to attain.

(c) **Fractures in the weld connections of the corrugation to the**

lower shelf plate resulting from fractured welding of the adjacent shedder plate

It is recommended that suitable scallops be arranged in the shedder plate in way of the connection, and the weld connections of the corrugations be repaired as indicted in **4.3.1**.

(d) **Fractures in the weld connections of the corrugations to the hopper tank, topside tank or to the deck in the vicinity of the hatchway opening**

It is recommended that the weld connection be repaired as indicated in **4.3.1** and, where possible, additional stiffening be fitted inside the tanks to align with the flanges of the corrugations, or on the under deck clear of the tanks.

BULK CARRIERS	Guidelines for Surveys, Assessment and Repair of Hull Structure	
Part 1	**Cargo hold region**	**Example No.**
Area 4	**Transverse bulkhead and associated structure in cargo hold**	**1-a**
Detail of damage	Fractures at weld connections to stool shelf plate	

Sketch of damage

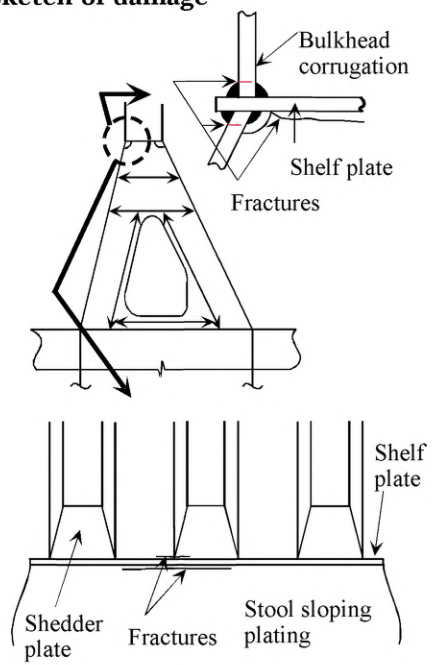

Sketch of repair

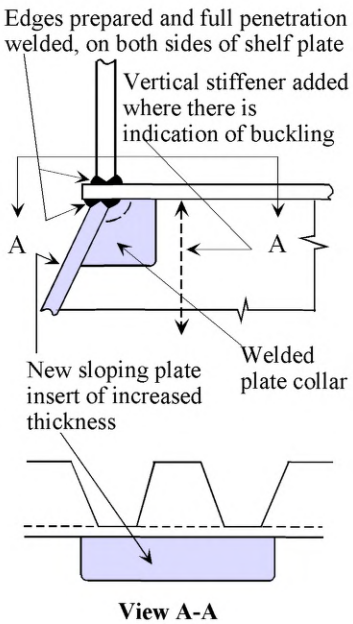

Notes on possible cause of damage

1. Stress concentrations at welds adjacent to the scallops.
2. Inadequate welding area connecting corrugation flange to shelf plate or similarly sloping stool plating to shelf plate.
3. Inadequate thickness of sloping plating in relation to corrugation flange thickness.
4. Stress concentration at knuckle of corrugation where web is not supported by bracket inside the stool.

Notes on repairs

1. Fractures to be veed-out and rewelded.
2. Reductions in stress concentration by fitting welded plate collars in way of the scallop.
3. Where necessary an insert plate to be arranged in stool plating and/or diaphragm.

BULK CARRIERS	Guidelines for Surveys, Assessment and Repair of Hull Structure	
Part 1	Cargo hold region	Example No.
Area 4	Transverse bulkhead and associated structure in cargo hold	1-b
Detail of damage	Fractures at weld connections to stool shelf plate	

Sketch of damage

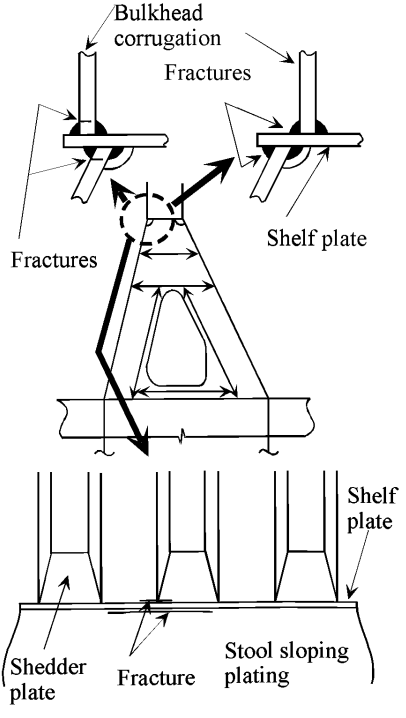

Sketch of repair

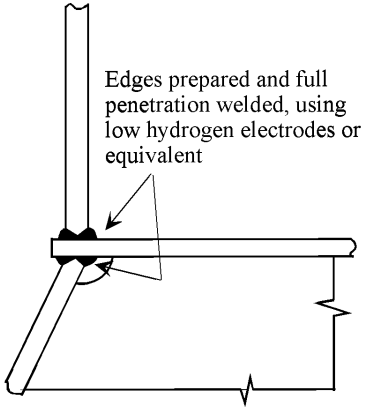

Notes on possible cause of damage

1. Misalignment between corrugation flange and sloping stool plating.
2. Inadequate welding area connecting corrugation flange to shelf plate or similarly sloping stool plating to shelf plate.

Notes on repairs

1. Fractures to be veed-out and rewelded.
2. Structure to be released and misalignment rectified.
3. Edge of the corrugated bulkhead and the stool plating on both sides of shelf plate to have full penetration welds.
4. Where necessary an insert plate to be arranged in stool plating.

BULK CARRIERS	Guidelines for Surveys, Assessment and Repair of Hull Structure	
Part 1	Cargo hold region	Example No.
Area 4	Transverse bulkhead and associated structure in cargo hold	2
Detail of damage	Fractures at the upper boundaries to topside tanks	

Sketch of damage

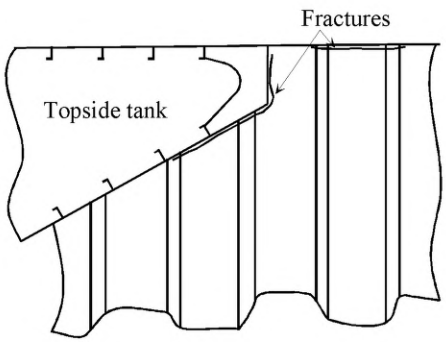

Sketch of repair

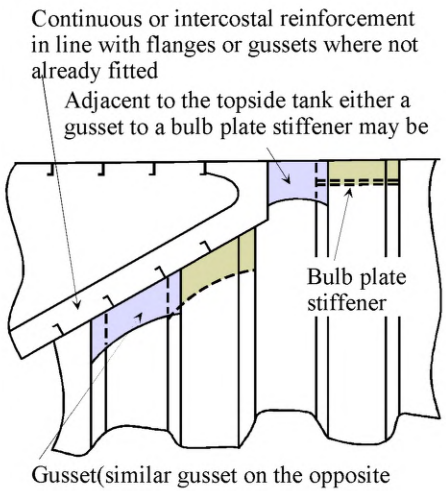

Notes on possible cause of damage

1. Damage due to poor design and/or defective welds.

Notes on repairs

1. Fractures may be veed-out and rewelded. If necessary corrugated plating cropped and renewed.
2. It is recommended that reinforcement as shown above be incorporated, giving due consideration to the following criteria:

2.1 It is important to have the gusset plates well aligned with the transverse structure inside the tank. Gusset plates may be joggled to obtain this alignment.

2.2 If there is no transverse web already existing inside the topside tank and in line with the flanges of corrugation or gusset plates, reinforcement as shown above to be fitted.

BULK CARRIERS	Guidelines for Surveys, Assessment and Repair of Hull Structure	
Part 1	Cargo hold region	Example No.
Area 4	Transverse bulkhead and associated structure in cargo hold	3
Detail of damage	Indentation and buckling of vertical corrugation	

Sketch of damage

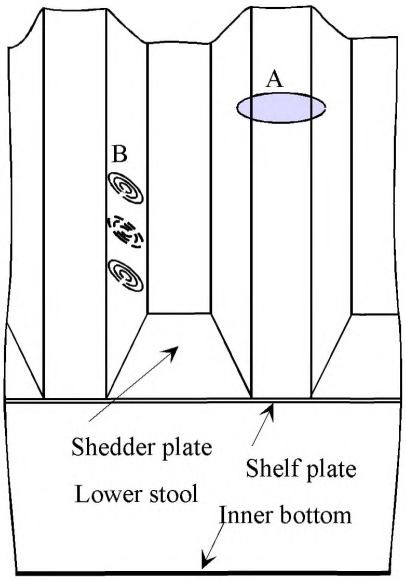

Sketch of repair

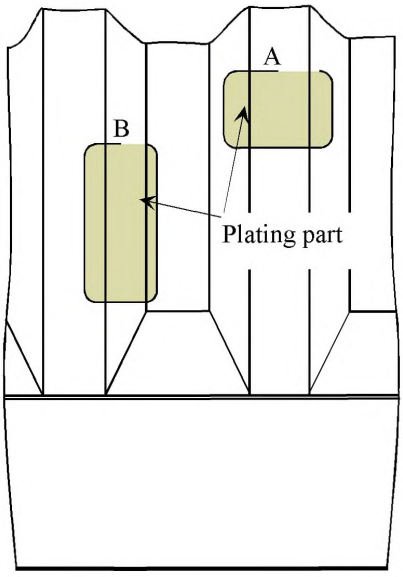

Notes on possible cause of damage

1. Damages by mechanical abuse during cargo handling e.g. grab damage.
2. Damage resulting from thickness reduction by corrosion.
3. Buckling caused by bending or shear, see locations A and B respectively above, with a minimum reduction in thickness could be caused by underdesign or overloading. If this cause is suspected, the Classification Society concerned shall be contacted before proceeding with repairs.

Notes on repairs

1. Damage by mechanical abuse
   If the indentation/buckling is local and of a minor nature, the plating can be faired in place.
   If the deformation is more pronounced and/or in association with a generalized reduction in thickness the plating is to be cropped and renewed, as shown at locations A and B above.
2. Damage resulting from corrosion
   In this case thickness measurements are to be taken at mid-span and top and bottom of corrugations, and corrugations renewed or part renewed as necessary. Particular attention is to be given to the fit and alignment at corners of flanged corrugations when being partly renewed.

BULK CARRIERS	Guidelines for Surveys, Assessment and Repair of Hull Structure	
Part 1	**Cargo hold region**	**Example No.**
Area 4	**Transverse bulkhead and associated structure in cargo hold**	**4**
Detail of damage	Fractures in the web of the corrugation initiating at intersection of adjacent shedder plates	

Sketch of damage

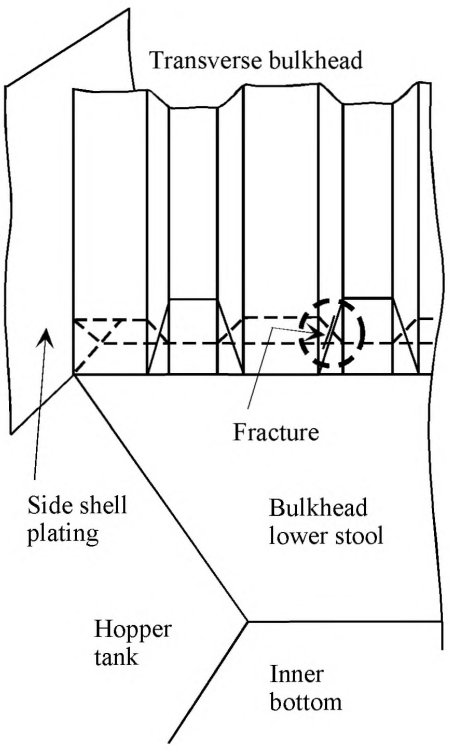

Sketch of repair

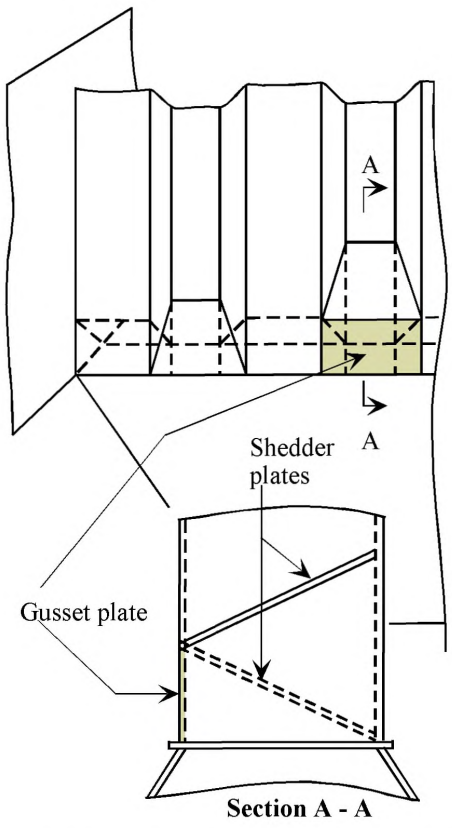

Notes on possible cause of damage

1. Damage due to stress concentrations at intersection of shedder plates. This can be exacerbated by corrosion and reduction in thickness of the corrugation web plating.

Notes on repairs

1. If due to wastage, corrugation plating and shedder plates to be part renewed/renewed as necessary.
2. Where renewals are being carried out it may be prudent to fit the extension pieces shown above to change the location of the point of intersection, and hence reduce the stress concentration.

BULK CARRIERS	Guidelines for Surveys, Assessment and Repair of Hull Structure	
Part 1	Cargo hold region	Example No.
Area 4	Transverse bulkhead and associated structure in cargo hold	5
Detail of damage	Fractures at weld connection of lower stool plating to inner bottom in way of duct keel	

Sketch of damage

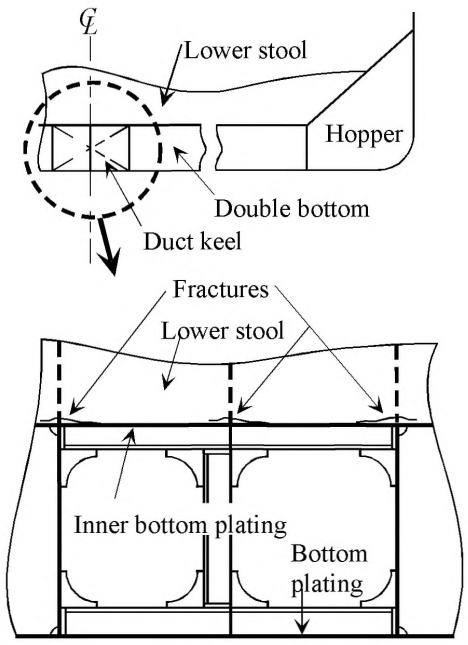

Sketch of repair

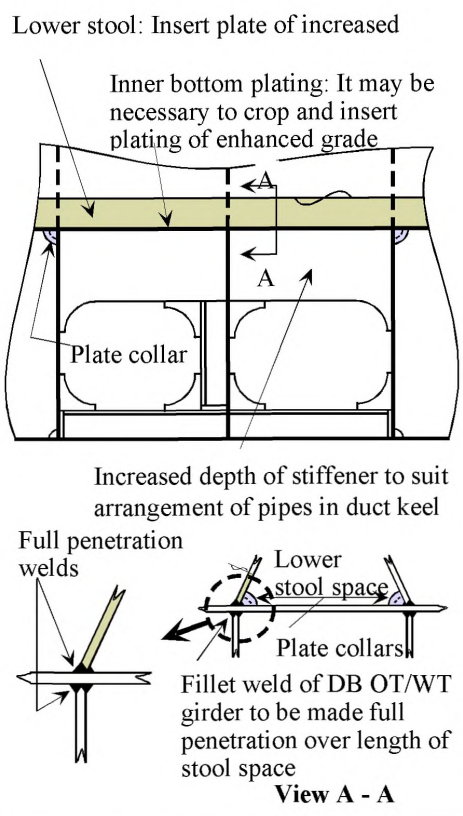

Notes on possible cause of damage

1. This type of failure is more likely to occur at the boundaries of the ballast hold.
2. The fractures arise because of stress concentration in way of cut-outs and exacerbated by the flexibility of the inner bottom structure in way of the duct keel.

Notes on repairs

1. In order to prevent recurrence of the damage, the additional reinforcement shown should be fitted.

BULK CARRIERS	Guidelines for Surveys, Assessment and Repair of Hull Structure	
Part 1	Cargo hold region	Example No.
Area 4	Transverse bulkhead and associated structure in cargo hold	6
Detail of damage	Fractures at the connection of lower stool to hopper	

Sketch of damage

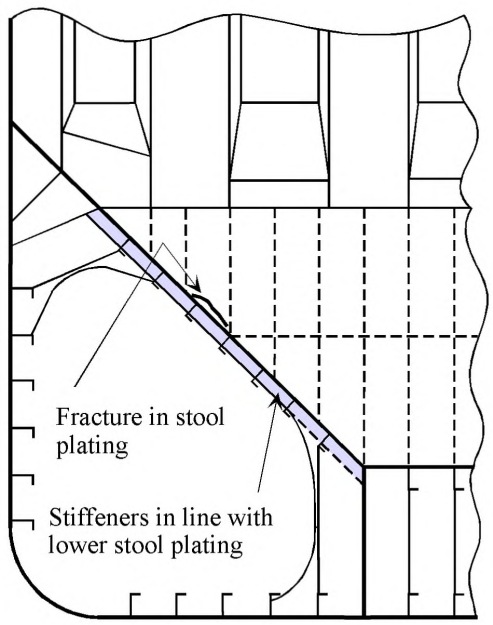

Sketch of repair

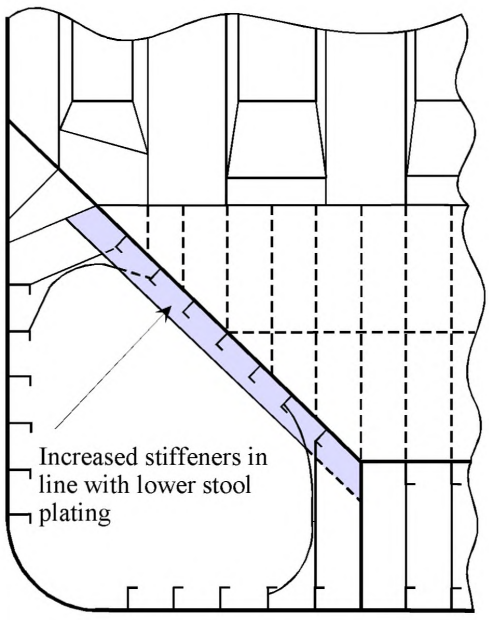

Notes on possible cause of damage

1. Insufficient strength of the connection
2. Corrosion

Notes on repairs

1. Fractured stool plating should be partly cropped and renewed (thicker plate) if considered necessary.
2. If the damage occurred due to insufficient strength, stiffeners in line with stool plating should be increased.

BULK CARRIERS	Guidelines for Surveys, Assessment and Repair of Hull Structure	
Part 1	**Cargo hold region**	**Example No.**
Area 4	**Transverse bulkhead and associated structure in cargo hold**	**7**
Detail of damage	Buckling of strut supporting hatch end beam	

Sketch of damage

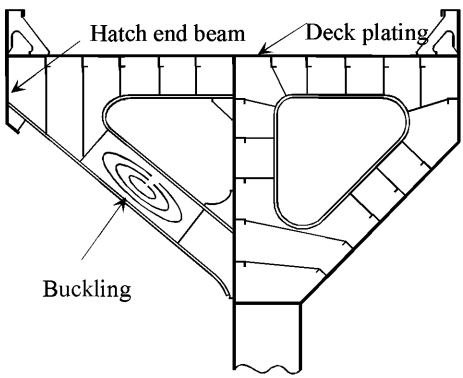

Upper stool

Sketch of repair

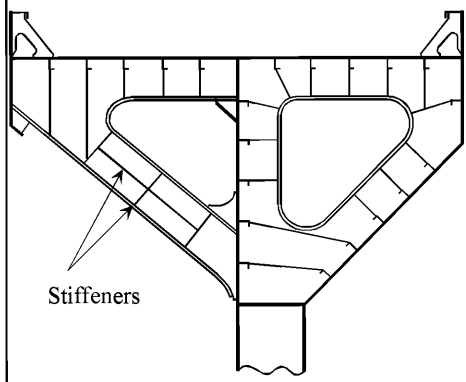

Notes on possible cause of damage

1. Insufficient strength
2. Partial ballast loading in ballast cargo hold (sloshing)
3. Corrosion

Notes on repairs

1. Deformed part to be cropped and renewed if considered necessary.
2. If the damage occurred due to insufficient strength, appropriate reinforcement is to be considered (thicker plate/additional stiffener(s)).

Area 5Double bottom tank structure including hopper

Contents

1 General

2 What to look for - Tank top inspection
2.1 Material wastage
2.2 Deformations
2.3 Fractures

3 What to look for - Double bottom and hopper tank inspection
3.1 Material wastage
3.2 Deformations
3.3 Fractures

4 What to look for - External bottom inspection
4.1 Material wastage
4.2 Deformations
4.3 Fractures

5 General comments on repair
5.1 Material wastage
5.2 Deformations
5.3 Fractures

Figures and/or Photographs - Area 5	
No.	**Title**
Figure 1	Typical fractures in the connection of hopper plating and inner bottom plating
Photograph 1	Grooving corrosion of weld of bottom plating
Photograph 2	Section of the grooving shown in Photograph 1

Examples of structural detail failures and repairs - Area 5	
Example No.	**Title**
1	Fractures in inner bottom plating around container bottom pocket
2	Fractures, corrosion and/or buckling of floor/girder around lightening hole
3	Fractures at weld connections of floors in way of hopper/inner bottom interface (radiused knuckle)
4	Fractures at weld connections of floors in way of hopper/inner bottom interface (welded knuckle)

Examples of structural detail failures and repairs - Area 5	
Example No.	**Title**
5	Fractures at weld connections of floors in way of inner bottom and side girders, and plating of bulkhead stool
6	Fractures and buckling in way of a cut-out for the passage of a longitudinal through a transverse primary member
7	Fractures in longitudinal at floor/transverse web frame or bulkhead
8	Fractures in bottom and inner bottom longitudinals in way of inner bottom and bulkhead stool boundaries
9	Fractures in longitudinals in way of bilge well
10	Buckling of transverse web
11	Fractures at weld connection of the transverse brackets
12	Fractures in bottom shell/side shell/hopper sloping plating at the corner of drain hole/air hole in longitudinal
13	Fractures in bottom shell plating along side girder and/or bottom longitudinal
14	Corrosion in bottom shell plating below suction head
15	Corrosion in bottom shell plating below sounding pipe
16	Deformation of forward bottom shell plating due to slamming
17	Fractures in bottom shell plating at the termination of bilge keel

1 General

1.1 In addition to contributing to the longitudinal bending strength of the hull girder, the double bottom structure provides support for the cargo in the holds. The tank top structure is subjected to impact forces of cargo and mechanical equipment during cargo loading and unloading operations. The bottom shell at the forward part of the ship may sustain increased dynamic forces caused by slamming in heavy weather.

1.2 Double bottom tank structure in way of combined cargo/ballast hold(s) is more prone to fractures and deformation compared to the structure in way of holds dedicated for carriage of cargo.

1.3 The weld at the connections of the tank top/hopper sloping plate and tank top/bulkhead stool may suffer damage caused by the use of bulldozers to unloading cargo.

2 What to look for - Tank top inspection

2.1 Material wastage

2.1.1 The general corrosion condition of the tank top structure may be observed by visual inspection. The level of wastage of tank top plating may have to be established by means of thickness measurement.

2.1.2 The bilge wells should be cleaned and inspected closely since heavy pitting corrosion may have occurred due to accumulated water/corrosive solution in the wells. Special attention should be paid to the plating in way of the bilge suction and sounding pipes.

2.1.3 Special attention should also be paid to areas where pipes penetrate the tank top.

2.2 Deformations

2.2.1 Buckling of the tank top plating may occur between longitudinals in areas subject to in-plane transverse compressive stresses or between floors in areas subject to in-plane longitudinal compressive stresses.

2.2.2 Deformed structures may be observed in areas of the tank top due to overloading of cargo, impact of cargo during loading/unloading operations, or the use of mechanical unloading equipment.

2.2.3 Whenever deformations are observed on the tank top, further inspection in the double bottom tanks is imperative in order to determine the extent of the damage. The deformation may cause the breakdown of coating within the double bottom, which in turn may lead to accelerated corrosion rate in these unprotected areas.

2.3 Fractures

2.3.1 Fractures will normally be found by close-up inspection. Fractures that

extend through the thickness of the plating or through the welds may be observed during pressure testing of the double bottom tanks (See **Figure 1** and **2** of **Area 4**).

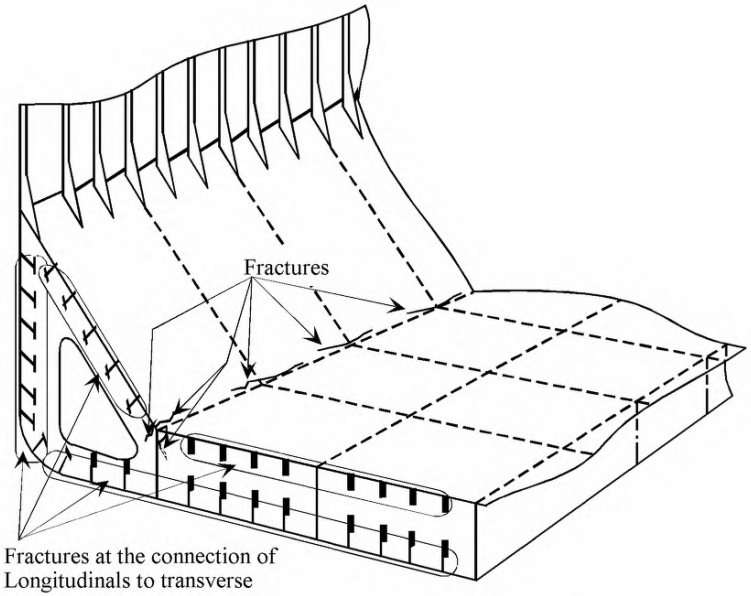

Figure 1 Typical fractures in the connection of hopper sloping plating to inner bottom (tank top) and longitudinals to transverse (or transverse bulkhead)

3 What to look for - Double bottom and hopper tank inspection

3.1 Material wastage

3.1.1 The level of wastage of double bottom internal structure (longitudinals, transverses, floors, girders, etc.) may have to be established by means of thickness measurements.

Rate and extent of corrosion depends on the corrosive environment, and protective measures employed, such as coatings and sacrificial anodes. The following structures are generally susceptible to corrosion (also see **3.1.2** - **3.1.4**).

(a) Structure in corrosive environment
Back side of inner bottom plating and inner bottom longitudinal
Transverse bulkhead and girder adjacent to heated fuel oil tank

(b) Structure subject to high stress
Face plates and web plates of transverse at corners

Connection of longitudinal to transverse
(c) Areas susceptible to coating breakdown
Back side of face plate of longitudinal
Welded joint
Edge of access opening
(d) Areas subject to poor drainage
Web of side longitudinals

3.1.2 If the protective coating is not properly maintained, structure in the ballast tank may suffer severe localised corrosion. In general, structure at the upper part of the double bottom tank usually has more severe corrosion than that at the lower part. Transverse webs in the hopper tanks may suffer severe corrosion at their corners where high shearing stresses occur, especially where collar plate is not fitted to the slot of the longitudinal.

3.1.3 The high temperature due to heated fuel oil may accelerate corrosion of ballast tank structure near heated fuel tanks. The rate of corrosion depends on several factors such as:
- Temperature and heat input to the ballast tank.
- Condition of original coating and its maintenance. (It is preferable for applying the protective coating of ballast tank at the building of the ship, and for subsequent maintenance, that the stiffeners on the boundaries of the fuel tank be fitted within the fuel tank instead of the ballast tank).
- Ballasting frequency and operations.
- Age of ship and associated stress levels as corrosion reduces the thickness of the structural elements and can result in fracturing and buckling.

3.1.4 Shell plating below suction head often suffers localized wear caused by erosion and cavitation of the fluid flowing through the suction head. In addition, the suction head will be positioned in the lowest part of the tank and water/mud will cover the area even when the tank is empty. The condition of the shell plating may be established by feeling by hand beneath the suction head. When in doubt, the lower part of the suction head should be removed and thickness measurements taken. If the vessel is docked, the thickness can be measured from below. If the distance between the suction head and the underlying shell plating is too small to permit access, the suction head should be dismantled. The shell plating below the sounding pipe should also be carefully examined. When a striking plate has not been fitted or is worn out, heavy corrosion can be caused by the striking of the weight of the sounding tape (See **Example 2** in **Part 3**).

3.2 Deformations

3.2.1 Where deformations are identified during tank top inspection (See **2.2**) and external bottom inspection (See **4.2**), the deformed areas should be subjected to in tank inspection to determine the extent of the damage to

the coating and internal structure.

Deformations in the structure not only reduce the structural strength but may also cause breakdown of the coating, leading to accelerated corrosion.

3.3 Fractures

3.3.1 Fractures will normally be found by close-up inspection.

3.3.2 Fractures may occur in way of the welded or radiused knuckle between the inner bottom and hopper sloping plating if the side girder in the double bottom is not in line with the knuckle and also when the floors below have a large spacing, or when corner scallops are created for ease of fabrication. The local stress variations due to the loading and subsequent deflection may lead to the development of fatigue fractures which can be categorised as follows (See **Figure 1**).

(a) Parallel to the knuckle weld for those knuckles which are welded and not radiused.

(b) In the inner bottom and hopper plating and initiated at the centre of a radiused knuckle.

(c) Extending in the hopper web plating and floor weld connections starting at the corners of scallops, where such exist, in the underlying hopper web and floor.

(d) Extending in the web plate as in (c) above but initiated at the edge of a scallop.

3.3.3 The fractures in way of connection of inner bottom plating/hopper sloping plating to stool may be caused by the cyclic deflection of the inner bottom induced by repeated loading from the sea or due to poor "through-thickness" properties of the inner bottom plating. Scallops in the underlying girders can create stress concentrations which further increase the risk of fractures. These can be categorised as follows (See **Figure 1** and **Examples**).

(a) In way of the intersection between inner bottom and stool. These fractures often generate along the edge of the welded joint above the centre line girder, side girders, and sometimes along the duct keel sides.

(b) Fractures in the inner bottom longitudinals and the bottom longitudinals in way of the intersection with the watertight floors below the transverse bulkhead stools in way of the ballast hold, especially in way of suction wells.

(c) Fractures at the connection between the longitudinals and the vertical stiffeners or brackets on the floors, as well as at the corners of the duct keel.

(d) Lamellar tearing of the inner bottom plate below the weld connection with the stool in the ballast hold caused by large bending stresses in the connection when in heavy ballast condition. The size of stool and lack of full penetration welds could also be a contributory factor, as well as poor "through-thickness" properties of the tank top plating.

3.3.4 Transition region

In general, the termination of the following structural members at the collision bulkhead and engine room forward bulkhead is prone to fractures:

- Hopper tank sloping plating
- Panting stringer in fore peak tank
- Inner bottom plating in engine room

In order to avoid stress concentration due to discontinuity appropriate stiffeners are to be provided in the opposite space. If such stiffeners are not provided, or are deficient due to corrosion or misalignment, fractures may occur at the terminations.

4 What to look for - External bottom inspection

4.1 Material wastage

4.1.1 Hull structure below the water line can usually be inspected only when the ship is dry-docked. The opportunity should be taken to inspect the external plating thoroughly. The level of wastage of the bottom plating may have to be established by means of thickness measurements.

4.1.2 Severe grooving along welding of bottom plating is often found (See **Photographs 1** and **2**). This grooving can be accelerated by poor maintenance of the protective coating and/or sacrificial anodes fitted to the bottom plating.

4.1.3 Bottom or "docking" plugs should be carefully examined for excessive corrosion along the edge of the weld connecting the plug to the bottom plating.

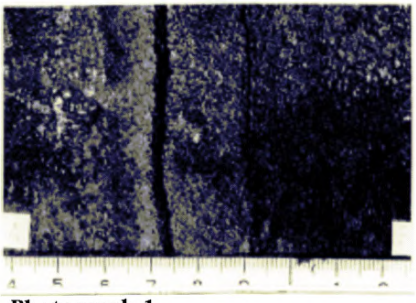

Photograph 1
Grooving corrosion of welding of bottom plating

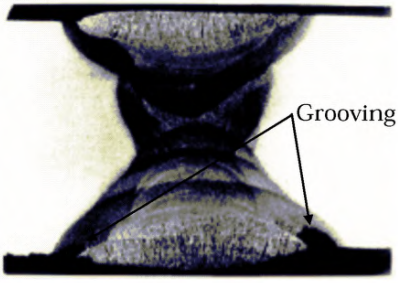

Photograph 2
Section of the grooving shown in Photograph 1

4.2 Deformations

4.2.1 Buckling of the bottom shell plating may occur between longitudinals or floors in areas subject to in-plane compressive stresses (either longitudinally or transversely). Deformations of bottom plating may also

be attributed to dynamic force caused by wave slamming action at the forward part of the vessel, or contact with underwater objects. When deformation of the shell plating is found, the affected area should be inspected internally. Even if the deformation is small, the internal structure may have suffered serious damage.

4.3 Fractures

4.3.1 The bottom shell plating should be inspected when the hull has dried since fractures in shell plating can easily be detected by observing leakage of water from the cracks in clear contrast to the dry shell plating.

4.3.2 Fractures in butt welds and fillet welds, particularly at the wrap around at scallops and ends of bilge keel, are sometimes observed and may propagate into the bottom plating. The cause of fractures in butt welds is usually related to weld defect or grooving. If the bilge keels are divided at the block joints of hull, all ends of the bilge keels should be inspected.

5 General comments on repair

5.1 Material wastage

5.1.1 Repair work in double bottom will require careful planning in terms of accessibility and gas freeing is required for repair work in fuel oil tanks.

5.1.2 Plating below suction heads and sounding pipes is to be replaced if the average thickness is below the acceptable limit (See **Examples 14** and **15**). When scattered deep pitting is found, it may be repaired by welding.

5.2 Deformations

Extensively deformed tank top and bottom plating should be replaced together with the deformed portion of girders, floors or transverse web frames. If there is no evidence that the deformation was caused by grounding or other excessive local loading, or that it is associated with excessive wastage, additional internal stiffening may need to be provided. In this regard, the Classification Society concerned should be contacted.

5.3 Fractures

5.3.1 Repair should be carried out in consideration of nature and extent of the fractures.

(a) Fractures of a minor nature may be veed-out and rewelded. Where cracking is more extensive, the structure is to be cropped and renewed.

(b) For fractures caused by the cyclic deflection of the double bottom, reinforcement of the structure may be required in addition to cropping and renewal of the fractured part.

(c) For fractures due to poor through thickness properties of the plating, cropping and renewal with steel having adequate through thickness properties is an acceptable solution.

5.3.2 The fractures in the knuckle connection between inner bottom plating

and hopper sloping plating should be repaired as follows.

(a) Where the fracture is confined to the weld, the weld is to be veed-out and renewed using full penetration welding, with low hydrogen electrodes or equivalent.

(b) Where the fracture has extended into the plating of any tank boundary, then the fractured plating is to be cropped, and part renewed.

(c) Where the fracture is in the vicinity of the knuckle, the corner scallops in floors and transverses are to be omitted, or closed by welded collars. The sequence of welding is important, in this respect every effort should be made to avoid the creation of locked in stresses due to the welding process.

(d) Where the floor spacing is 2.0m or greater, brackets are to be arranged either in the vicinity of, or mid-length between, floors in way of the intersection. The brackets are to be attached to the adjacent inner bottom and hopper longitudinals. The thickness of the bracket is to be in accordance with the Rules of the Classification Society concerned.

(e) If the damage is confined to areas below the ballast holds and the knuckle connection is of a radiused type, then in addition to rectifying the damage (i.e. weld or crop and renew), consideration is to be given to fitting further reinforcement, e.g. longitudinals or scarfing brackets, in the vicinity of the upper tangent point of the radius.

5.3.3 The fractures in the connection between inner bottom plating/hopper sloping plating and stool should be repaired as follows.

(a) Fractures in way of section of the inner bottom and bulkhead stool in way of the double bottom girders can be veed out and welded. However, reinforcement of the structure may be required, e.g. by fitting additional double bottom girders on both sides affected girder or equivalent reinforcement. Scallops in the floors should be closed and air holes in the non-watertight girders re-positioned.

If the fractures are as a result of differences in the thickness of adjacent stool plate and the floor below the inner bottom, then it is advisable to crop and part renew the upper part of the floor with plating having the same thickness and mechanical properties as the adjacent stool plating.

If the fractures are as a result of misalignment between the stool plating and the double bottom floors, the structure should be released with a view to rectifying the misalignment.

(b) Fractures in the inner bottom longitudinals and the bottom longitudinals in way of the intersection with watertight floors are to be cropped and partly renewed. In addition, brackets with soft toes are to be fitted in order to reduce the stress concentrations at the floors or stiffener.

(c) Fractures at the connection between the longitudinals and the vertical stiffeners or brackets are to be cropped and longitudinal part

renewed if the fractures extend to over one third of the depth of the longitudinal. If fractures are not extensive these can be veed out and welded. In addition, reinforcement should be provided in the form of modification to existing bracket toes or the fitting of additional brackets with soft toes in order to reduce the stress concentration.

(d) Fractures at the corners of the transverse diaphragm/stiffeners are to be cropped and renewed. In addition, scallops are to be closed by overlap collar plates. To reduce the probability of such fractures recurring, consideration is to be given to one of the following reinforcements or modifications.
- The fitting of short intercostal girders in order to reduce the deflection at the problem area.
- The depth of transverse diaphragm/stiffener at top of duct keel is to be increased as far as is practicable to suit the arrangement of pipes.

(e) Lamellar tearing may be eliminated through improving the type and quality of the weld, i.e. full penetration using low hydrogen electrodes and incorporating a suitable weld throat.

Alternatively the inner bottom plating adjacent to and in contact with the stool plating is substituted with plating of "Z" quality steel which has good "through-thickness" properties.

5.3.4 Bilge keel should be repaired as follows.

(a) Fractures or distortion in bilge keels must be promptly repaired. Fractured butt welds should be repaired using full penetration welds and proper welding procedures. The bilge keel is subjected to the same level of longitudinal hull girder stress as the bilge plating, fractures in the bilge keel can propagate into the shell plating.

(b) Termination of bilge keel requires proper support by internal structure. This aspect should be taken into account when cropping and renewing damaged parts of a bilge keel (See **Example 17**).

BULK CARRIERS	Guidelines for Surveys, Assessment and Repair of Hull Structure	
Part 1	Cargo hold region	Example No.
Area 5	Double bottom structure including hopper	1
Detail of damage	Fractures in inner bottom plating around container bottom pocket	

Sketch of damage

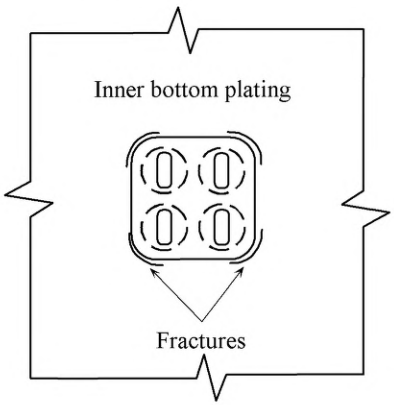

Sketch of repair

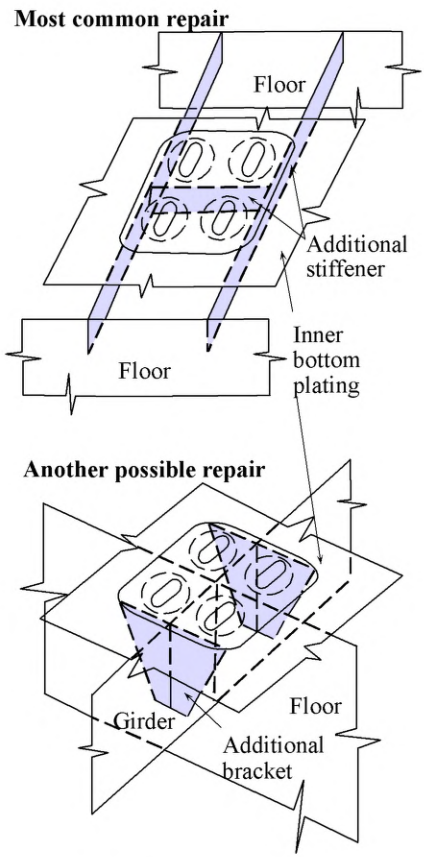

Notes on possible cause of damage

1. Pocket is not supported correctly by floor, longitudinal and/or stiffener.

Notes on repairs

1. Fractured plating should be cropped and part renewed.
2. Adequate reinforcement should be considered.

BULK CARRIERS	Guidelines for Surveys, Assessment and Repair of Hull Structure	
Part 1	**Cargo hold region**	**Example No.**
Area 5	**Double bottom structure including hopper**	**2**
Detail of damage	Fractures, corrosion and/or buckling of floor/girder around lightening hole	

Sketch of damage

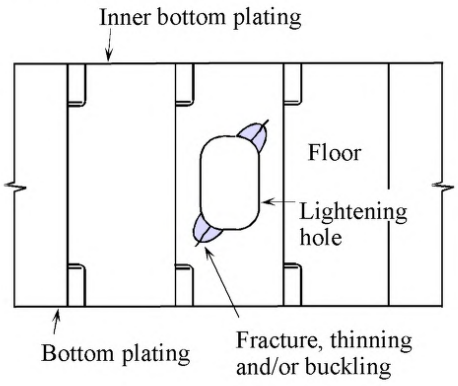

Sketch of repair

Repair A

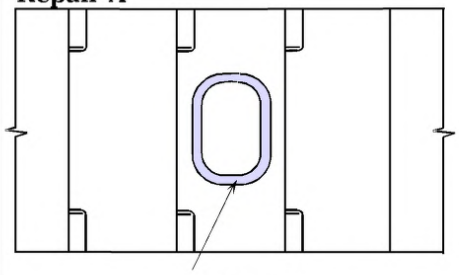

Repair B

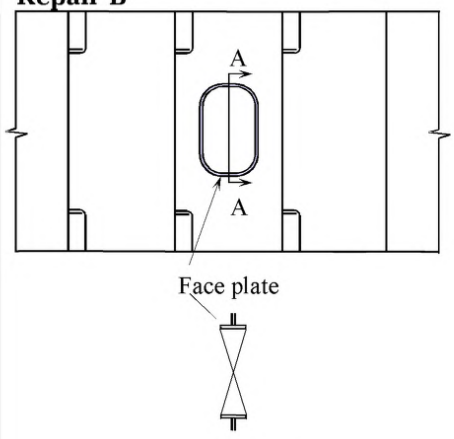

Section A-A

Notes on possible cause of damage

1. Insufficient strength due to lightening hole.
2. Fracture, corrosion and/or buckling around lightening hole due to high stress.

Notes on repairs

1. Fractured, corroded and/or buckled plating should be cropped and renewed if considered necessary.
2. Appropriate reinforcement should be considered.

BULK CARRIERS	Guidelines for Surveys, Assessment and Repair of Hull Structure	
Part 1	Cargo hold region	Example No.
Area 5	Double bottom tank structure including hopper	3
Detail of damage	Fractures at weld connections of floors in way of hopper/inner bottom interface (radiused knuckle)	

Sketch of damage

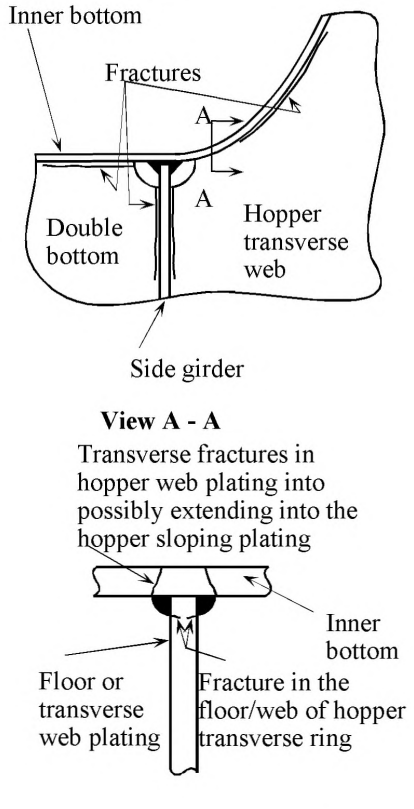

Sketch of repair

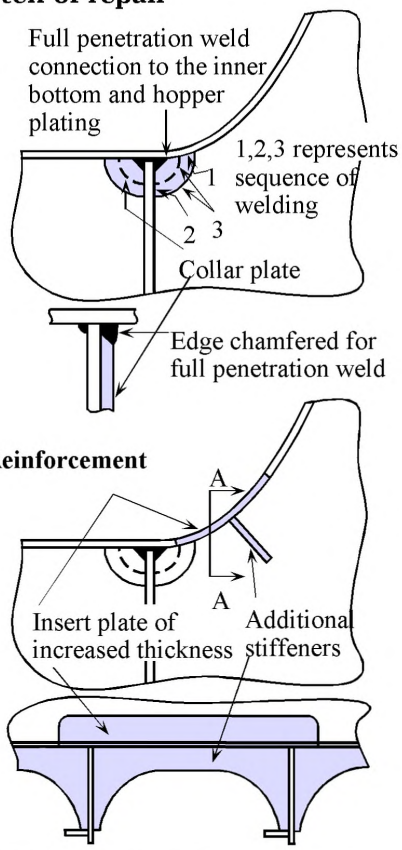

Notes on possible cause of damage

1. The damage is partly due to stress concentrations at the edges of the weld created by the presence of cut-outs and local stress variations caused by the deflections in the inner bottom/hopper plating.

Notes on repairs

1. The fracture in the weld and/or plating is veed-out/cropped and renewed as appropriate.
2. The cut-outs are eliminated by introducing suitable collar plate with emphasis on edge preparation and sequence of welding as shown above.
3. Further reinforcements may need to be carried out as shown above, however, after consultation with the Classification Society concerned.

BULK CARRIERS	Guidelines for Surveys, Assessment and Repair of Hull Structure	
Part 1	**Cargo hold region**	**Example No.**
Area 5	**Double bottom tank structure including hopper**	**4**
Detail of damage	Fractures at weld connections of floors in way of hopper/inner bottom interface (welded knuckle)	

Sketch of damage

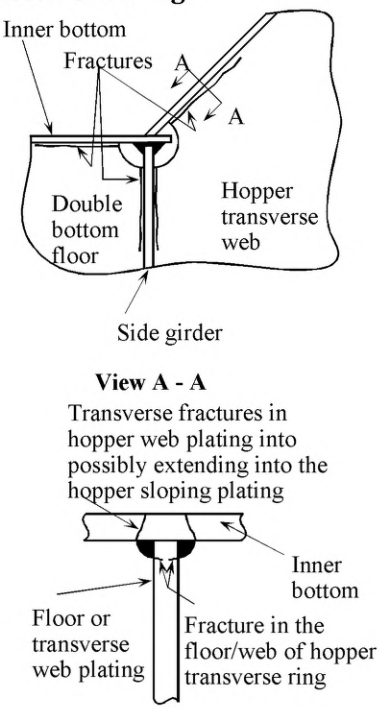

Sketch of repair

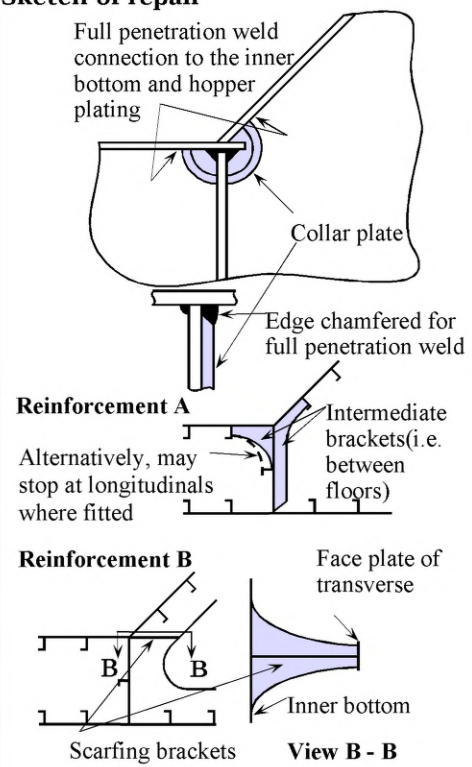

Notes on possible cause of damage

1. The damage is partly due to stress concentration at the edges of the weld .created by the presence of the deflections in the inner bottom/hopper plating.

Notes on repairs

1. The fracture in the weld and/or plating is veed-out/cropped and renewed as appropriate.
2. The cut-outs are eliminated by introducing suitable collar plates with emphasis on edge preparation and sequence of welding as shown above.
3. Further reinforcements may be incorporated as shown above and depending on the judged cause of damage.

BULK CARRIERS	Guidelines for Surveys, Assessment and Repair of Hull Structure	
Part 1	**Cargo hold region**	**Example No.**
Area 5	**Double bottom tank structure including hopper**	**5**
Detail of damage	Fractures at weld connections of floors in way of inner bottom and side girders, and plating of bulkhead stool	

Sketch of damage

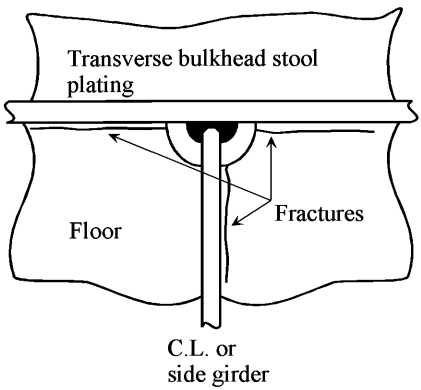

Sketch of repair

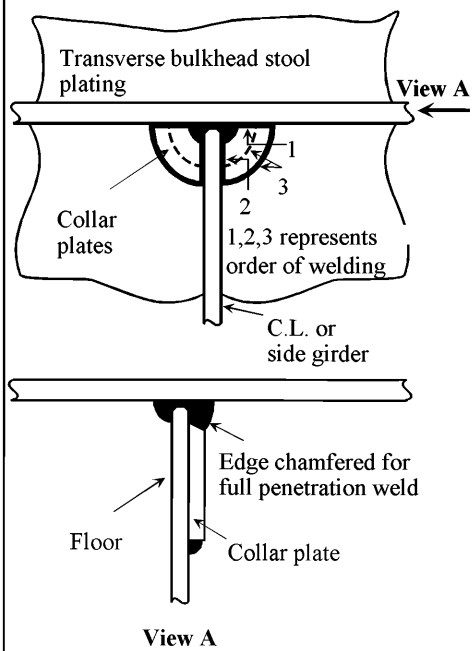

Notes on possible cause of damage

1. Stress concentration at the welds due to scallops.

Notes on repairs

1. The scallops will require to be fitted with welded collar plates to reduce stresses in the area.

BULK CARRIERS	Guidelines for Surveys, Assessment and Repair of Hull Structure	
Part 1	**Cargo hold region**	**Example No.**
Area 5	**Double bottom tank structure including hopper**	**6**
Detail of damage	Fractures and buckling in way of a cut-out for the passage of a longitudinal through a transverse primary member	

Sketch of damage

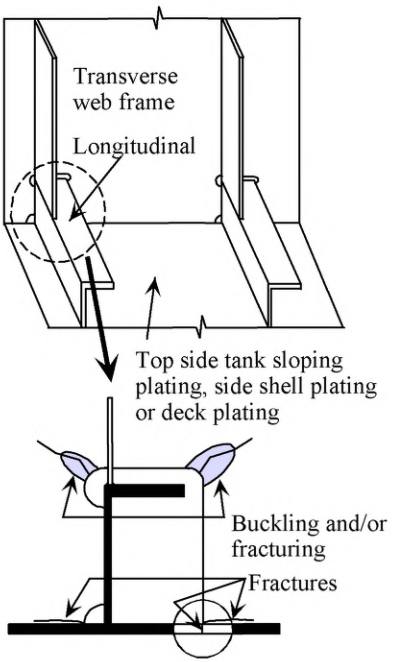

Sketch of repair

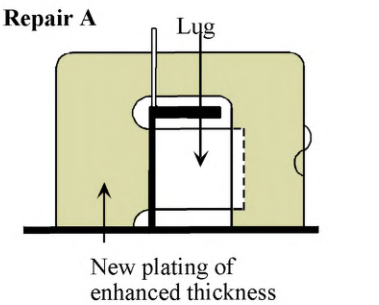

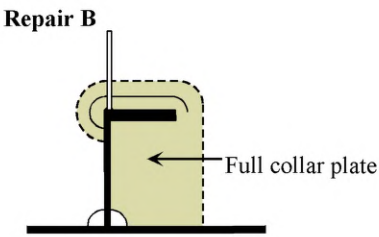

Notes on possible cause of damage

1. Damage can be caused by general levels of corrosion and presence of stress concentration associated with the presence of a cut-out.

Notes on repairs

1. If fractures are significant then crop and part renew the floor plating/transverse web otherwise the fracture can be veed-out and welded provided the plating is not generally corroded.
2. **Repair B** is to be incorporated if the lug proves to be ineffective.

BULK CARRIERS	Guidelines for Surveys, Assessment and Repair of Hull Structure	
Part 1	**Cargo hold region**	**Example No.**
Area 5	**Double bottom tank structure including hopper**	**7**
Detail of damage	Fractures in longitudinal at floor/transverse web frame or bulkhead	

Sketch of damage

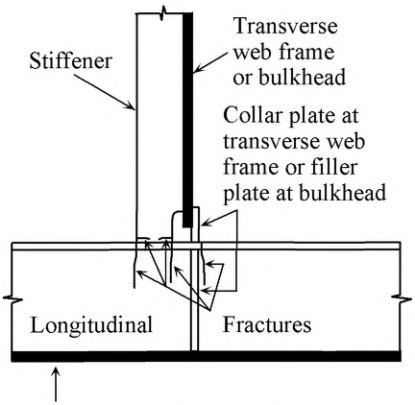

Sketch of repair

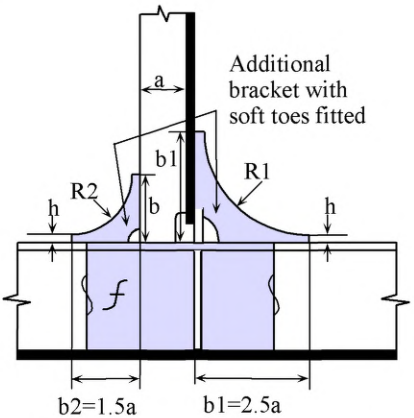

f: Where required, the longitudinal to be cropped and part renewed

1. For a slope at toes max.1:3, R1=(b1-h) x 1.6 and R2=(b2-h) x 1.6
2. Soft toe bracket to be welded first to longitudinal
3. Scallop in bracket to be as small as possible, recommended max.35mm
4. If toes of brackets are ground smooth, full penetration welds in way to be provided
5. Maximum length to thickness ratio = 50:1 for unstiffened bracket edge
6. Toe height, h, to be as small as possible (10-15mm)

Notes on possible cause of damage

1. Damage can be caused by stress concentrations leading to accelerated fatigue in this region.

Notes on repairs

1. If fractures are not extensive e.g. hairline fractures, they can be veed-out and welded.
2. If fracture extends to over one third of the depth of the longitudinal then crop and part renew.

BULK CARRIERS	Guidelines for Surveys, Assessment and Repair of Hull Structure	
Part 1	Cargo hold region	Example No.
Area 5	Double bottom tank structure including hopper	8
Detail of damage	Fractures in bottom and inner bottom longitudinals in way of inner bottom and bulkhead stool boundaries	

Sketch of damage

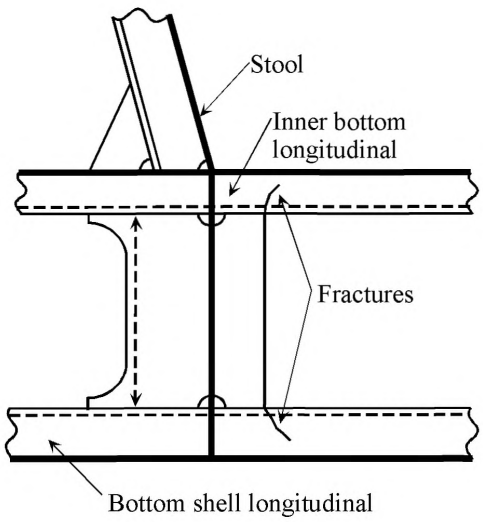

Sketch of repair

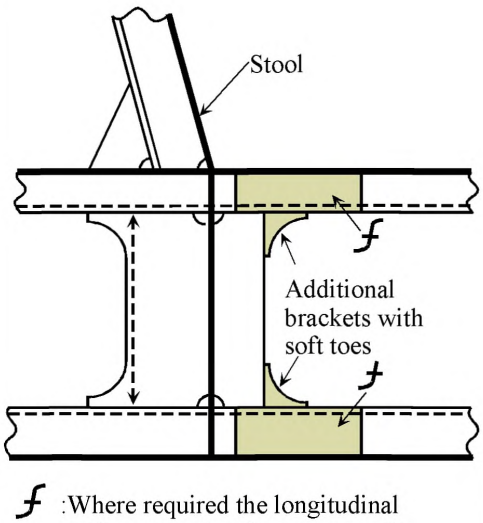

ƒ :Where required the longitudinal to be cropped and part renewed

Notes on possible cause of damage

1. Damage can be caused by stress concentration leading to accelerated fatigue in this region.

Notes on repairs

1. If fractures are not extensive e.g. hairline fractures then these can be veed-out and welded.
2. If fracture extended to over one third of the depth of the longitudinal depth then crop and part renew.

BULK CARRIERS	Guidelines for Surveys, Assessment and Repair of Hull Structure	
Part 1	**Cargo hold region**	**Example No.**
Area 5	**Double bottom tank structure including hopper**	**9**
Detail of damage	Fractures in longitudinal in way of bilge well	

Sketch of damage

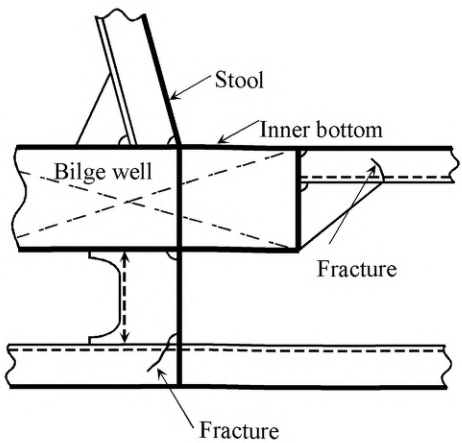

Sketch of repair

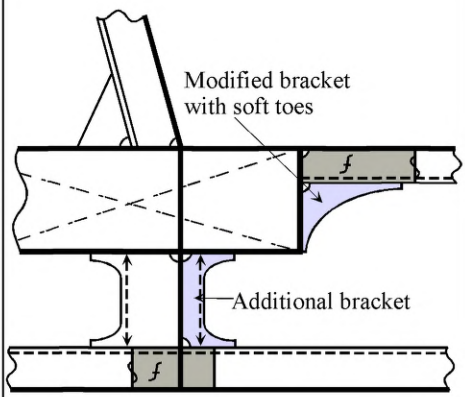

ƒ: Where required the longitudinals to be cropped and part renewed

Notes on possible cause of damage

1. Damage can be caused by stress concentrations leading to accelerated fatigue in this region.

Notes on repairs

1. If fractures are not extensive e.g. hairline fractures then these can be veed-out and welded.
2. If the fracture extended to over one third of the depth of the longitudinal then crop and part renew.

BULK CARRIERS	Guidelines for Surveys, Assessment and Repair of Hull Structure	
Part 1	Cargo hold region	Example No.
Area 5	Double bottom tank structure including hopper	10
Detail of damage	Buckling of transverse web	

Sketch of damage

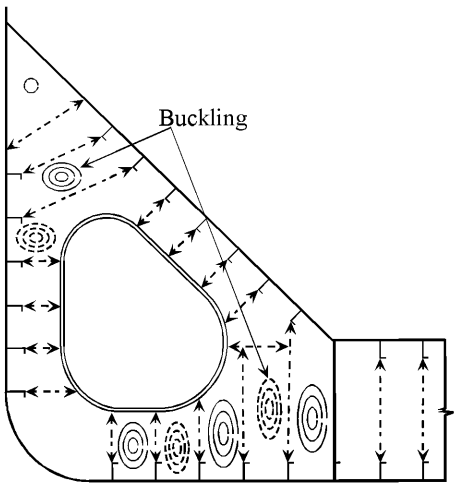

Sketch of repair

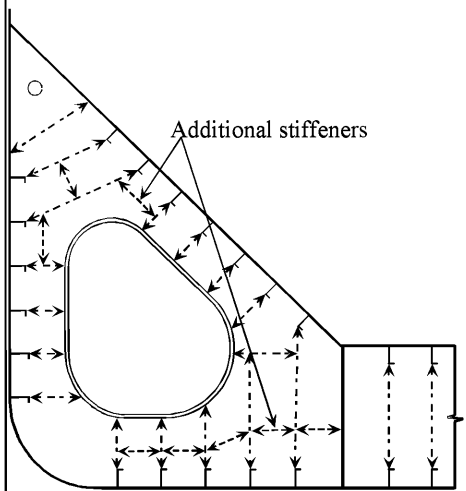

Notes on possible cause of damage

1. Insufficient buckling strength of transverse web plating.
2. Corrosion of high stress area.

Notes on repairs

1. If the buckling occurred without significant corrosion, adequate reinforcement is to be carried out.
2. If the buckling occurred due to corrosion of high stress (shear stress) area, damaged area is to be cropped and part renewed. Adequate reinforcement and protective measures should be considered.

BULK CARRIERS	Guidelines for Surveys, Assessment and Repair of Hull Structure	
Part 1	Cargo hold region	Example No.
Area 5	Double bottom tank structure including hopper	11
Detail of damage	Fractures at weld connection of transverse brackets	

Sketch of damage

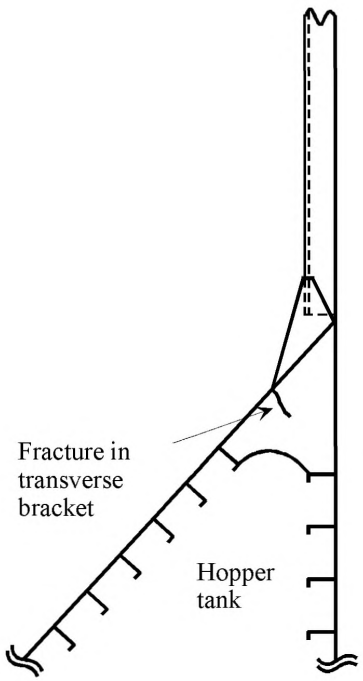

Sketch of repair

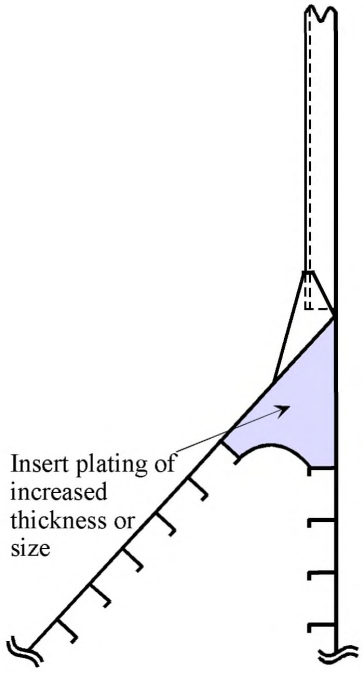

Notes on possible cause of damage

1. General levels of corrosion and presence of stress concentration.
2. Misalignment of the brackets with adjoining structure e.g. frame brackets.
3. High shear stresses due to insufficient bracket.
4. Inadvertent overloading.

Notes on repairs

1. If the damage is caused by misalignment with the frame bracket above, the misalignment is to be rectified.
2. Replacement by a bracket of increased thickness or size should be considered.

BULK CARRIERS	Guidelines for Surveys, Assessment and Repair of Hull Structure	
Part 1	Cargo hold region	Example No.
Area 5	Double bottom tank structure including hopper	12
Detail of damage	Fractures in bottom shell/side shell/hopper sloping plating at the corner drain hole/air hole in longitudinal	

Sketch of damage

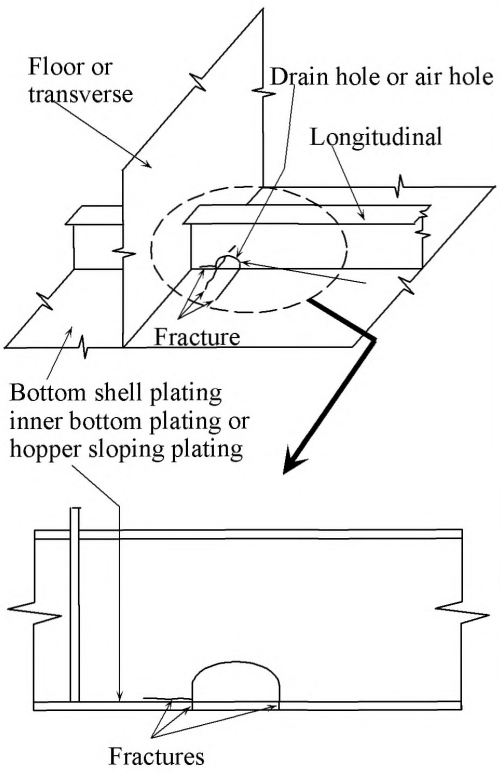

Sketch of repair

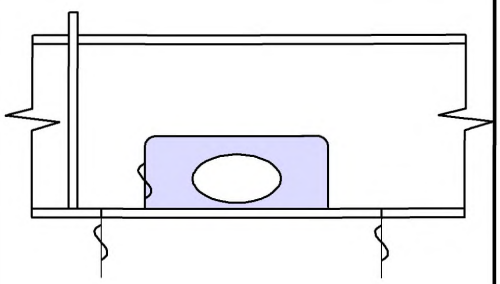

Notes on possible cause of damage

1. Stress concentration and/or corrosion due to stress concentration at the corner of drain hole/air hole.

Notes on repairs

1. Fractured plating should be cropped and part renewed.
2. If fatigue life is to be improved, change of drain hole/air hole shape is to be considered.

BULK CARRIERS	Guidelines for Surveys, Assessment and Repair of Hull Structure	
Part 1	**Cargo hold region**	**Example No.**
Area 5	**Double bottom tank structure including hopper**	**13**
Detail of damage	Fractures in bottom plating along side girder and/or bottom longitudinal	

Sketch of damage

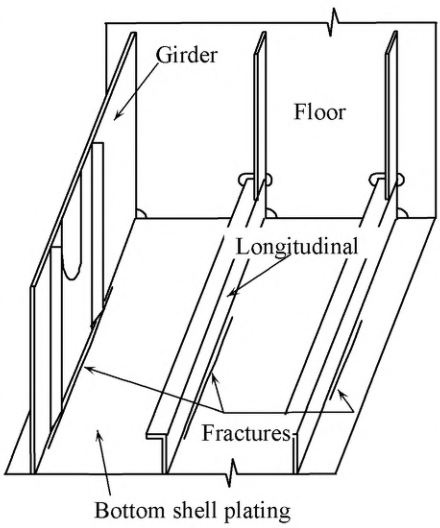

Sketch of repair

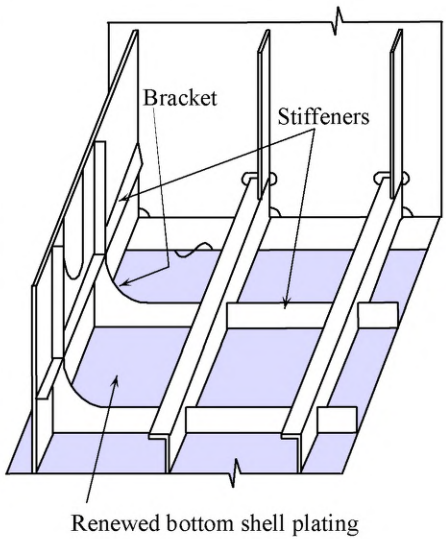

Notes on possible cause of damage

1. Vibration.

Notes on repairs

1. Fractured bottom shell plating should be cropped and renewed.
2. Natural frequency of the panel should be changed, e.g. reinforcement by additional stiffener/bracket.

BULK CARRIERS	Guidelines for Surveys, Assessment and Repair of Hull Structure	
Part 1	Cargo hold region	Example No.
Area 5	Double bottom tank structure including hopper	14
Detail of damage	Corrosion in bottom plating below suction head	

Sketch of damage

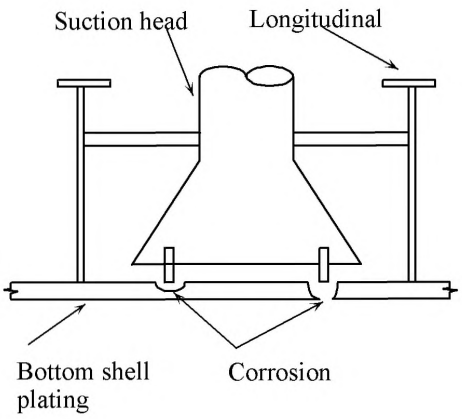

Sketch of repair

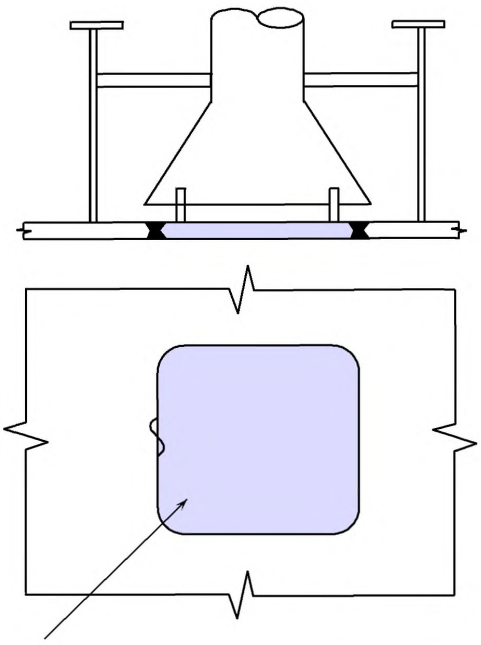

1. Insert to have round corners
2. Non-destructive examination to be applied after welding based on the Society's rules

Notes on possible cause of damage

1. High flow rate associated with insufficient corrosion prevention system.
2. Galvanic action between dissimilar metals.

Notes on repairs

1. Affected plating should be cropped and part renewed. Thicker plate and suitable beveling should be considered.
2. If the corrosion is limited to a small area,
   i. e. pitting corrosion, repair by welding is acceptable.

BULK CARRIERS	Guidelines for Surveys, Assessment and Repair of Hull Structure	
Part 1	**Cargo hold region**	**Example No.**
Area 5	**Double bottom tank structure including hopper**	**15**
Detail of damage	Corrosion in bottom plating below sounding pipe	

Sketch of damage

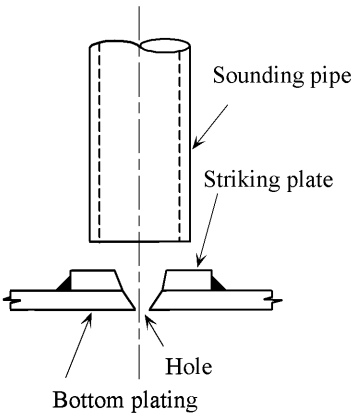

Sketch of repair

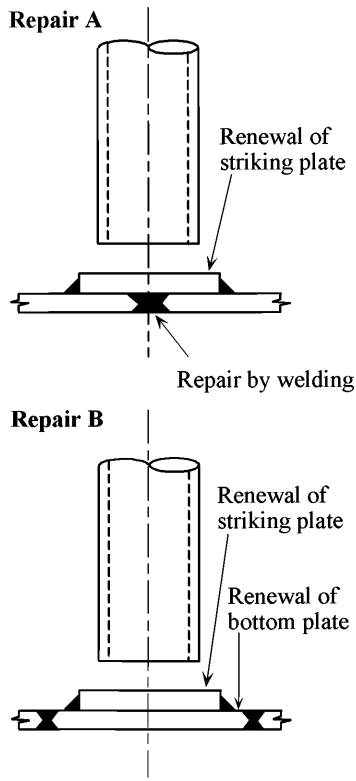

Notes on possible cause of damage

1. Accelerated corrosion of striking plate by the striking of the weight of the sounding tape.

Notes on repairs

1. Corroded bottom plating should be welded or partly cropped and renewed if considered necessary.
2. Corroded striking plate should be renewed.

BULK CARRIERS	Guidelines for Surveys, Assessment and Repair of Hull Structure	
Part 1	**Cargo hold region**	**Example No.**
Area 5	**Double bottom structure including hopper**	**16**
Detail of damage	Deformation of forward bottom shell plate due to slamming	

Sketch of damage

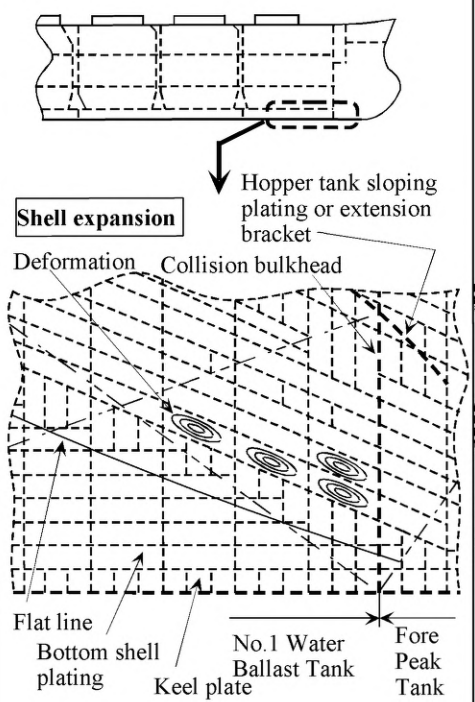

Sketch of repair

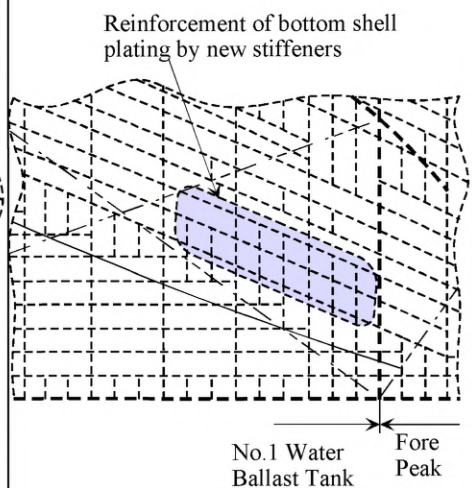

Notes on possible cause of damage

1. Heavy weather.
2. Poor design for slamming.
3. Poor operation, i.e. negligence of heavy ballast.

Notes on repairs

1. Deformed bottom shell plating should be faired in place, or partly cropped and renewed if considered necessary.
2. Bottom shell plating should be reinforced by stiffeners.

BULK CARRIERS	Guidelines for Surveys, Assessment and Repair of Hull Structure	
Part 1	Cargo hold region	Example No.
Area 5	Double bottom structure including hopper	17
Detail of damage	Fractures in shell plating at the termination of bilge keel	

Sketch of damage

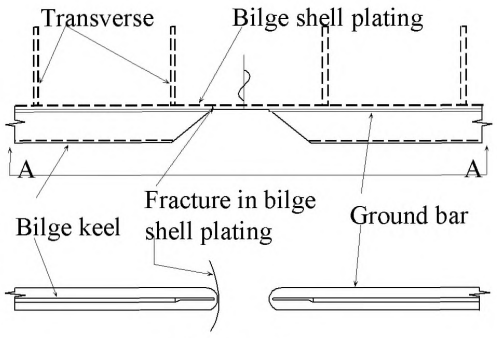

View A - A

Sketch of repair

Repair A

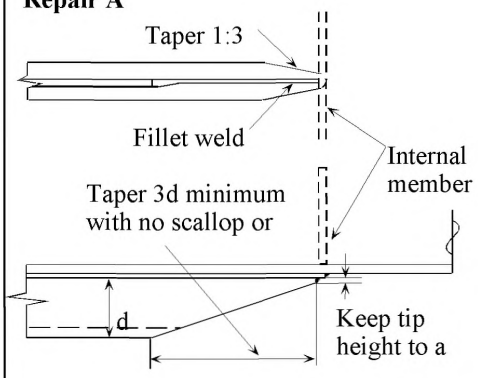

Repair B

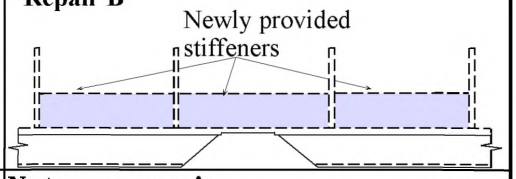

Notes on possible cause of damage

1. Poor design causing stress concentration.

Notes on repairs

1. Fractured plating is to be cropped and renewed.
2. Reduction of stress concentration of the bilge keel end should be considered.
   Repair A: Modification of the detail of end
   Repair B: New internal stiffeners
   Repair C: Continuous ground bar (in connection with **Repair A**)
3. Instead of **Repair A** or **B** continuous ground bar and bilge keel should be considered.

Part 2 Fore and aft end regions

Contents

Area 1 Fore end structure
Area 2 Aft end structure
Area 3 Stern frame, rudder arrangement and propeller shaft supports

Area 1 Fore End Structure

Contents

1 General

2 What to look for
2.1 Material wastage
2.2 Deformations
2.3 Fractures

3 General comments on repair
3.1 Material wastage
3.2 Deformations
3.3 Fractures

Figures and/or Photographs - Area 1	
No.	**Title**
Figure 1	Fore end structure - Potential problem areas

Examples of structural detail failures and repairs - Area 1	
Example No.	**Title**
1	Deformation of forecastle deck
2	Fractures in forecastle deck plating at bulwark
3	Fractures in side shell plating in way of chain locker
4	Deformation of side shell plating in way of forecastle space
5	Fracture and deformation of bow transverse web in way of cut-outs for side longitudinals
6	Fractures at toe of web frame bracket connection to stringer platform bracket

1 General

1.1 Due to the high humidity salt water environment, wastage of the internal structure in the fore peak ballast tank can be a major problem for many, and in particular ageing ships. Corrosion of structure may be accelerated where the tank is not coated or where the protective coating has not been properly maintained, and can lead to fracture~~s~~ of the internal structure and the tank boundaries.

1.2 Deformation can be caused by contact which can result in damage to the internal structure leading to fractures in the shell plating.

1.3 Fracture~~s~~ of internal structure in the fore peak tank and spaces ~~can~~ also result from wave impact load due to slamming and panting.

1.4 Forecastle structure is exposed to green water and can suffer~~s~~ damage such as deformation of deck structure, deformation and fracture of bulwarks and collapse of mast~~,~~ etc.

1.5 Shell plating around anchor and hawse pipe may suffer corrosion, deformation and possible fracture due to movement of improperly stowed anchor.

2 What to look for

2.1 Material wastage

2.1.1 Wastage (and possible subsequent fractures) is more likely to be initiated at the locations as indicated in **Figure 1** and particular attention should be given to these areas. A close-up inspection should be carried out with selection of representative thickness measurements to determine the extent of corrosion.

2.1.2 Structure in chain locker is liable to have heavy corrosion due to mechanical damage of ~~to~~ the protective coating caused by the action of anchor chains. In some ships, especially smaller ships, the side shell plating may form boundaries of the chain locker and heavy corrosion may consequently result in holes in the side shell plating.

2.2 Deformations

2.2.1 Contact with quay sides and other objects can result in large deformations and fractures of the internal structure. This may affect the watertight integrity of the tank boundaries and collision bulkhead. A close-up examination of the damaged area should be carried out to determine the extent of the damage.

2.3 Fractures

2.3.1 Fractures in the fore peak tank are normally found by close-up inspection of the internal structure.

2.3.2 Fractures are often found in transition region and reference should be made to **Part 1**, **Area 2** and **3**.

2.3.3 Fractures that extend through the thickness of the plating or through the boundary welds may be observed during pressure testing of tanks.

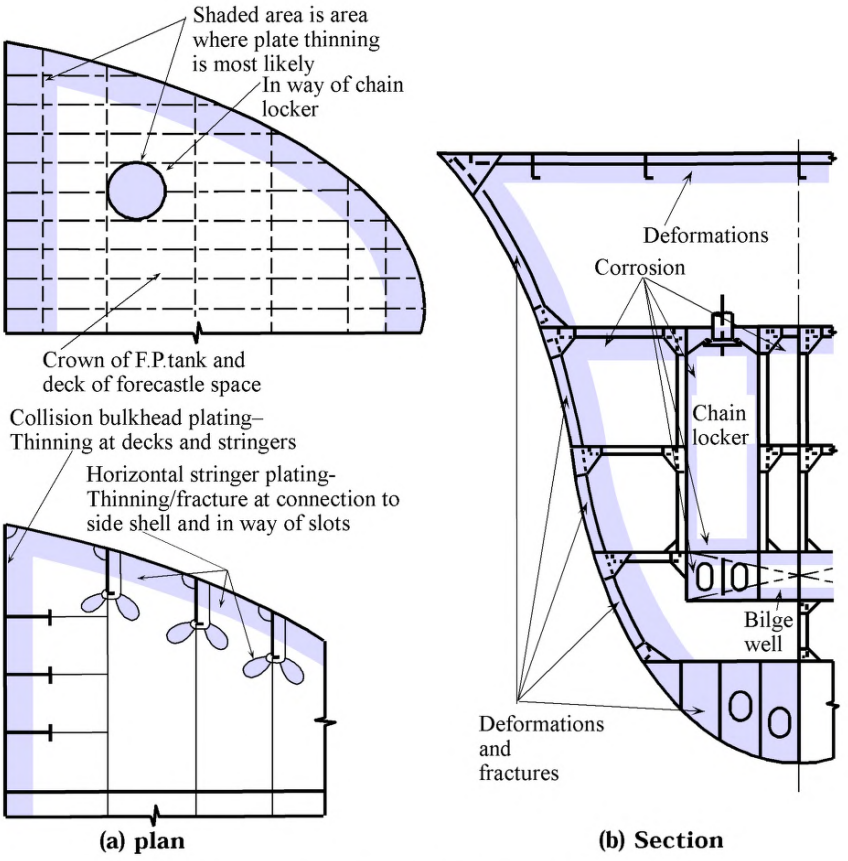

Fig 1 Fore end structure - Potential problem areas

3 General comments on repair

3.1 Material wastage

3.1.1 The extent of steel renewal required can be established based on representative thickness measurements. Where part of the structure has deteriorated to the permissible minimum thickness, then the affected area is to be cropped and renewed. Repair work in tanks requires careful planning in terms of accessibility.

3.2 Deformations

3.2.1 Deformed structure caused by contact should be cropped and part renewed or faired in place depending on the nature and extent of damage.

3.3 Fractures

3.3.1 Fractures of a minor nature may be veed-out and rewelded. Where cracking is more extensive, the structure is to be cropped and renewed. In the case of fractures caused by sea loads, increased thickness of plating and/or design modification to reduce stress concentrations should be considered (See **Examples 1**, **2** and **6**).

BULK CARRIERS	Guidelines for Surveys, Assessment and Repair of Hull Structure	
Part 2	Fore and aft end regions	Example No.
Area 1	Fore end structure	1
Detail of damage	Deformation of forecastle deck	

Sketch of damage

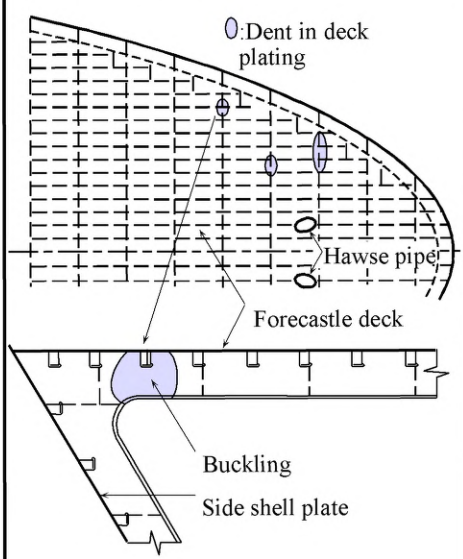

Sketch of repair

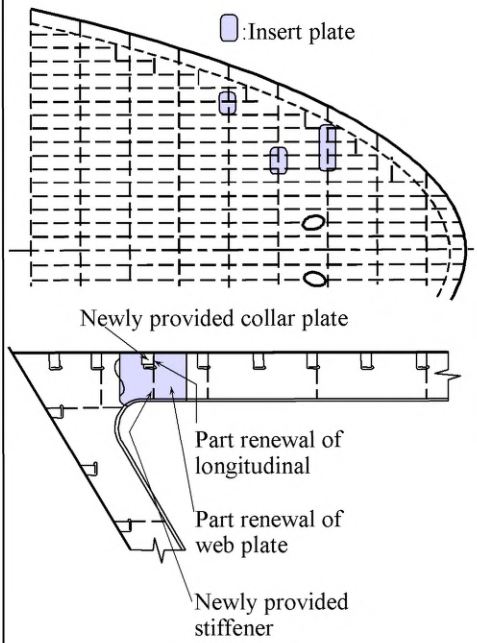

Notes on possible cause of damage

1. Green sea on deck.
2. Insufficient strength.

Notes on repairs

1. Deformed structure should be cropped and renewed.
2. Additional stiffeners on web of beam should be considered for reinforcement.

BULK CARRIERS	Guidelines for Surveys, Assessment and Repair of Hull Structure	
Part 2	Fore and aft end regions	Example No.
Area 1	Fore end structure	2
Detail of damage	Fractures in forecastle deck plating at bulwark	

Sketch of damage

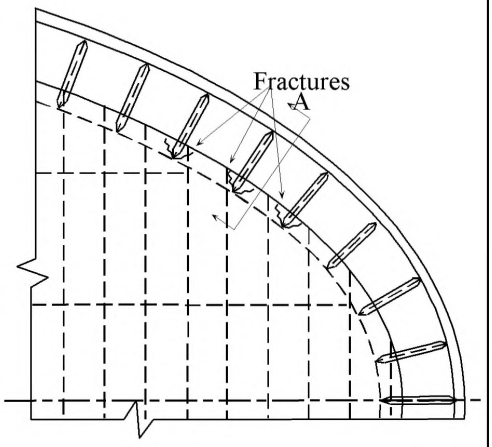

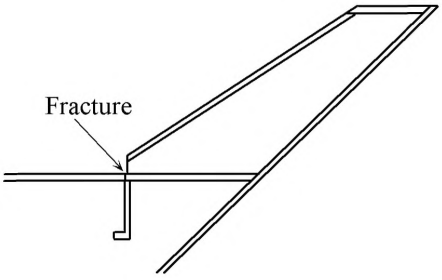

View A - A

Sketch of repair

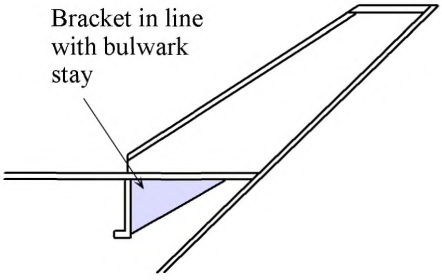

View A - A

Notes on possible cause of damage

1. Bow flare effect in heavy weather.
2. Stress concentration due to poor design.

Notes on repairs

1. Fractured deck plating should be cropped and renewed.
2. Bracket in line with the bulwark stay to be fitted to reduce stress concentration.

BULK CARRIERS	Guidelines for Surveys, Assessment and Repair of Hull Structure	
Part 2	Fore and aft end regions	Example No.
Area 1	Fore end structure	3
Detail of damage	Fractures in side shell plating in way of chain locker	

Sketch of damage

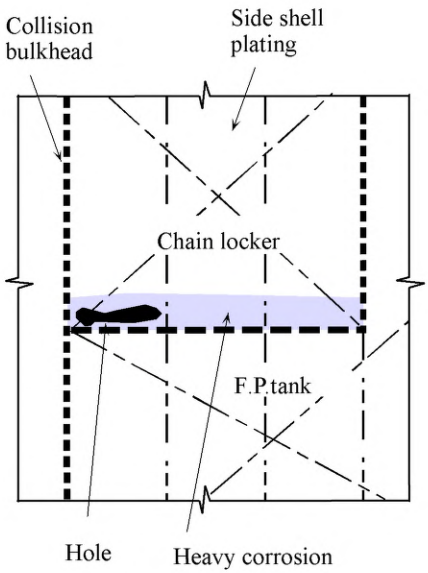

ketch of repair

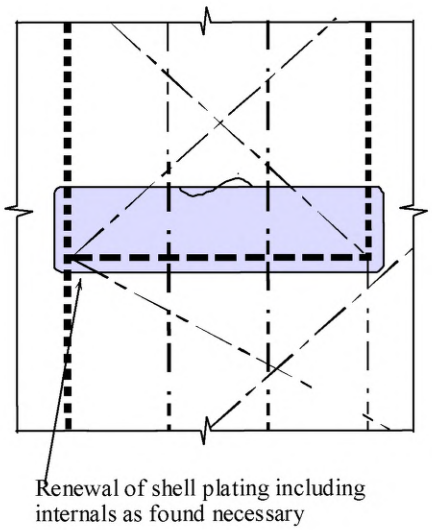

Notes on possible cause of damage

1. Heavy corrosion in region where mud is accumulated.

Notes on repairs

1. Corroded plating should be cropped and renewed.
2. Protective coating should be applied.

BULK CARRIERS	Guidelines for Surveys, Assessment and Repair of Hull Structure	
Part 2	**Fore and aft end regions**	**Example No.**
Area 1	**Fore end structure**	**4**
Detail of damage	Deformation of side shell plating in way of forecastle space	

Sketch of damage

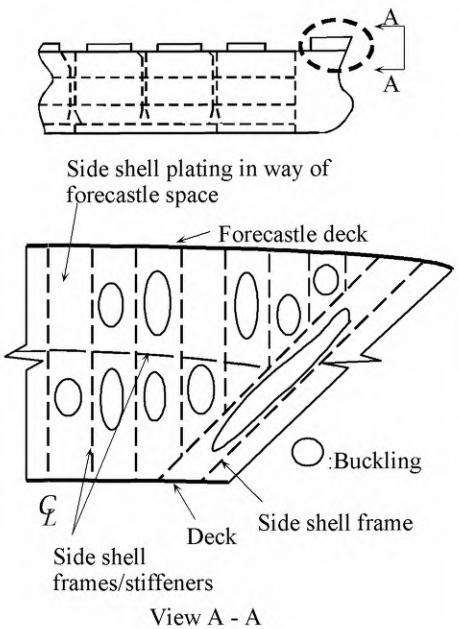

Sketch of repair

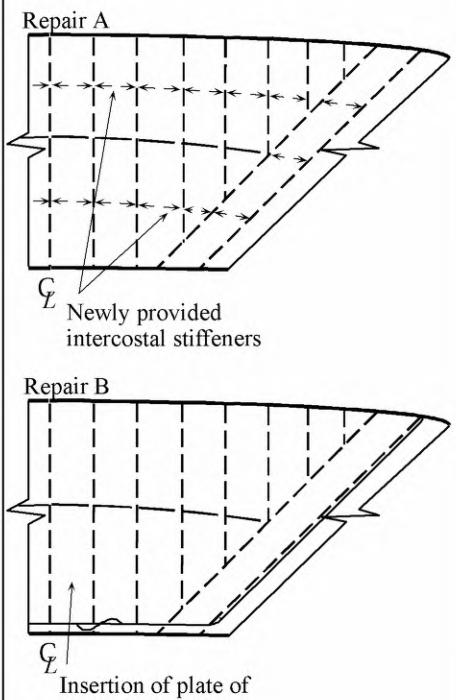

Notes on possible cause of damage

1. Heavy weather.
2. Insufficient strength.

Notes on repairs

1. Deformed part should be cropped and part renewed.
2. **Repair A**
   Additional stiffeners between existing stiffeners should be considered.
   Repair B
   Insertion of plate of increased thickness with additional stiffeners.

BULK CARRIERS	Guidelines for Surveys, Assessment and Repair of Hull Structure	
Part 2	Fore and aft end regions	Example No.
Area 1	Fore end structure	5
Detail of damage	Fracture and deformation of bow transverse web in way of cut-outs for side longitudinals	

Sketch of damage

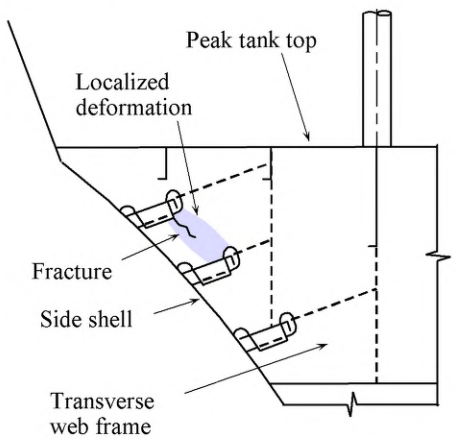

Sketch of repair

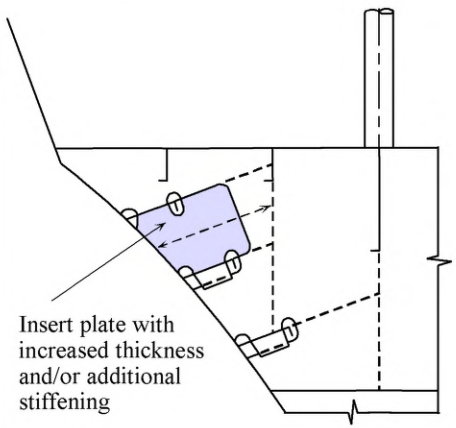

Notes on possible cause of damage

1. Localized material wastage in way of coating failure at cut-outs and sharp edges due to working of the structure.
2. Dynamic seaway loading in way of bow flare.

Notes on repairs

1. Sufficient panel strength to be provided to absorb the dynamic loads enhanced by bow flare shape.

BULK CARRIERS	Guidelines for Surveys, Assessment and Repair of Hull Structure	
Part 2	Fore and aft end regions	Example No.
Area 1	Fore end structure	6
Detail of damage	Fractures at toe of web frame bracket connection to stringer platform bracket	

Sketch of damage

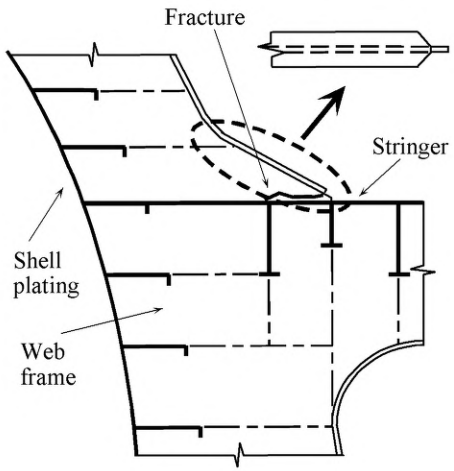

ketch of repair

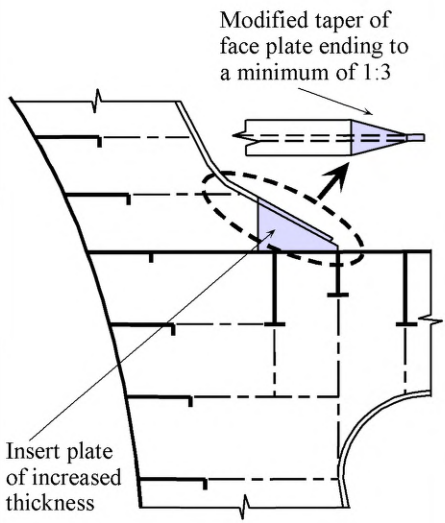

Notes on possible cause of damage

1. Inadequate bracket forming the web frame connection to the stringer.
2. Localized material wastage in way of coating failure at bracket due to flexing of the structure.
3. Dynamic seaway loading in way of bow flare.

Notes on repairs

1. Adequate soft nose bracket endings with a face plate taper of at least 1 : 3 to be provided.

Area 2 Aft end structure

Contents

1 General

2 What to look for
2.1 Material wastage
2.2 Deformations
2.3 Fractures

3 General comments on repair
3.1 Material wastage
3.2 Deformations
3.3 Fractures

Figures and/or Photographs - Area 2	
No.	**Title**
Figure 1	Aft end structure - Potential problem areas

Examples of structural detail failures and repairs - Area 2	
Example No.	**Title**
1	Fractures in longitudinal bulkhead in way of rudder trunk
2	Fractures at the connection of floors and girder/side brackets
3-a	Fractures in flat where rudder carrier is installed in steering gear room
3-b	Fractures in steering gear foundation brackets and deformed deck plate

1 General

1.1 Due to the high humidity salt water environment, wastage of the internal structure in the aft peak ballast tank can be a major problem for many, and in particular ageing, ships. Corrosion of structure may be accelerated where the tank is not coated or where the protective coating has not been properly maintained, and can lead to fractures of the internal structure and the tank boundaries.

1.1 Deformation can be caused by contact or wave impact action from astern (which can result in damage to the internal structure leading to fractures in the shell plating.

1.3 Fractures to the internal structure in the aft peak tank and spaces can also result from main engine and propeller excited vibration.

2 What to look for

2.1 Material wastage

2.1.1 Wastage (and possible subsequent fractures) is more likely to be initiated at in the locations as indicated in **Figure 1**. A close-up inspection should be carried out with selection of representative thickness measurements to determine the extent of corrosion. Particular attention should be given to bunker tank boundaries and spaces adjacent to heated engine room.

2.2 Deformations

2.2.1 Contact with quay sides and other objects can result in large deformations and fractures of the internal structure. This may affect the watertight integrity of the tank boundaries and bulkheads. A close-up examination of the deformed area should be carried out to determine the extent of the damage.

2.3 Fractures

2.3.1 Fractures in weld at floor connections and other locations in the aft peak tank and rudder trunk space can normally only be found by close-up inspection.

2.3.2 The structure supporting the rudder carrier may fracture and/or deform due to excessive load on the rudder. Bolts connecting the rudder carrier to the steering gear flat may also suffer damage under such load.

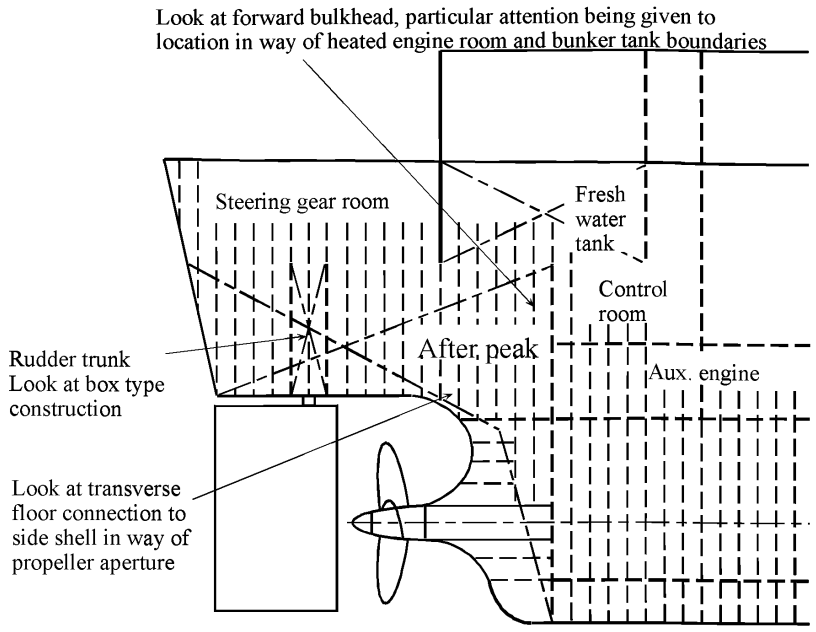

Figure 1 Aft end structure - Potential problem areas

3 General comments on repair

3.1 Material wastage

3.1.1 The extent of steel renewal required can be established based on representative thickness measurements. Where part of the structure has deteriorated to the permissible minimum thickness, then the affected area is to be cropped and renewed. Repair work in tanks requires careful planning in terms of accessibility.

3.2 Deformations

3.2.1 Deformed structure caused by contact should be cropped and part renewed or faired in place depending on the extent of damage.

3.3 Fractures

3.3.1 Fractures of a minor nature may be veed-out and rewelded. Where cracking is more extensive, the structure is to be cropped and renewed.

3.3.2 In order to prevent recurrence of damages suspected to be caused by main engine or propeller excited vibration, the cause of the vibration should be ascertained and additional reinforcements provided as found necessary (See **Examples 1** and **2**).

3.3.3 In the case of fractures caused by sea loads, increased thickness of plating and/or design modifications to reduce stress concentrations should be considered.

3.3.4 Fractured structure which supports rudder carrier is to be cropped, and renewed, and may have to be reinforced (See **Examples 3-a** and **3-b**).

BULK CARRIERS	Guidelines for Surveys, Assessment and Repair of Hull Structure	
Part 2	Fore and aft end regions	Example No.
Area 2	Aft end structure	1
Detail of damage	Fractures in bulkhead in way of rudder trunk	

Sketch of damage

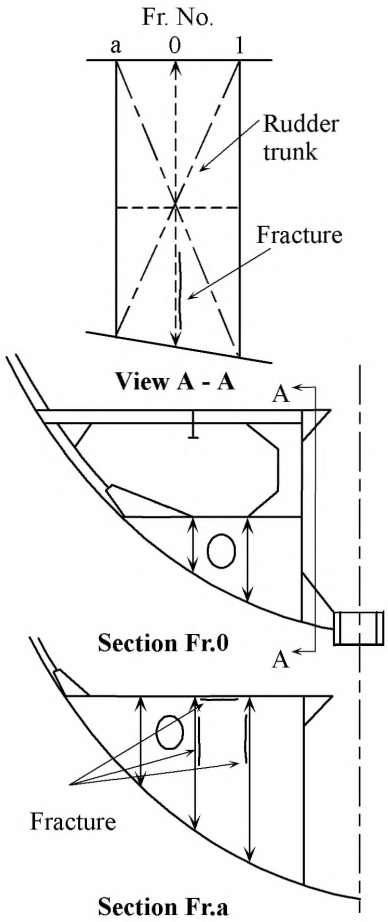

Sketch of repair

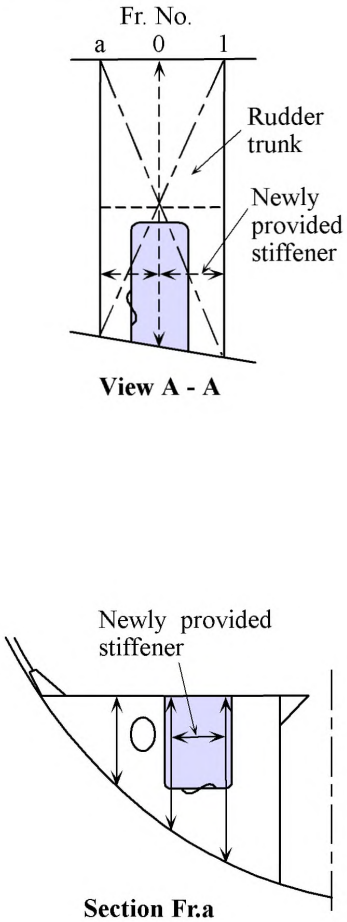

Notes on possible cause of damage

1. Vibration.

Notes on repairs

1. The fractured plating should be cropped and renewed.
2. Natural frequency of the plate between stiffeners should be changed, e.g. reinforcement by additional stiffeners.

BULK CARRIERS	Guidelines for Surveys, Assessment and Repair of Hull Structure	
Part 2	Fore and aft end regions	Example No.
Area 2	Aft end structure	2
Detail of damage	Fractures at the connection of floors and girders/side brackets	

Sketch of damage

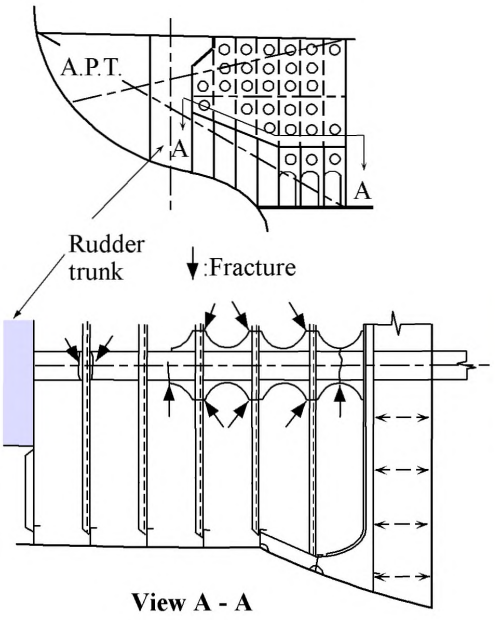

View A - A

Sketch of repair

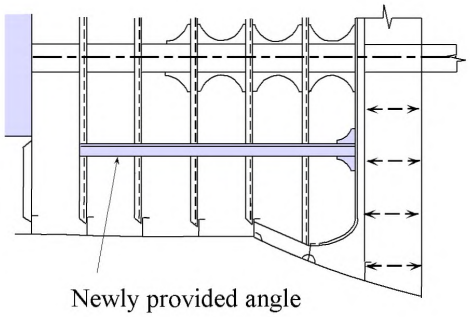

Notes on possible cause of damage

1. Vibration.

Notes on repairs

1. The fractured plating should be cropped and renewed.
2. Natural frequency of the panel should be changed, e.g. reinforcement by additional strut.

BULK CARRIERS	Guidelines for Surveys, Assessment and Repair of Hull Structure	
Part 2	Fore and aft end regions	Example No.
Area 2	Aft end structure	3-a
Detail of damage	Fractures in flat where rudder carrier is installed in steering gear room	

Sketch of damage

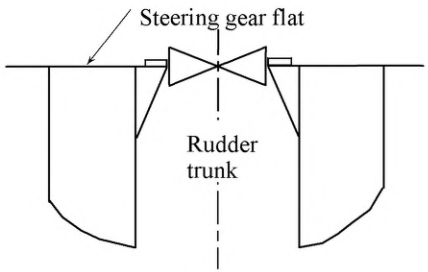

View A - A

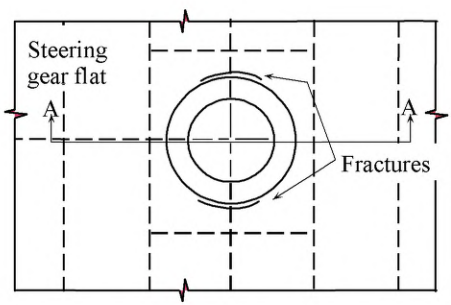

Sketch of repair

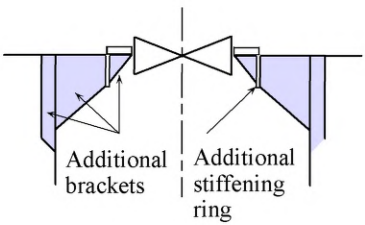

View B - B

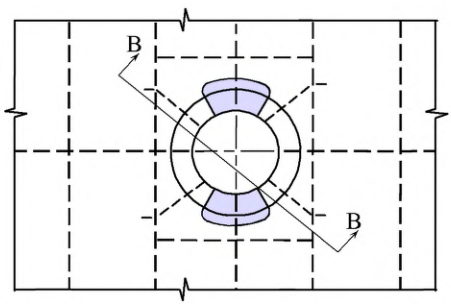

Notes on possible cause of damage

1. Inadequate design.

Notes on repairs

1. Fractured plating should be cropped and renewed.
2. Additional brackets and stiffening ring should be fitted for reinforcement.

BULK CARRIERS	Guidelines for Surveys, Assessment and Repair of Hull Structure	
Part 2	Fore and aft end regions	Example No.
Area 2	Aft end structure	3-b
Detail of damage	Fractures in steering gear foundation brackets and deformed deck plate	

Sketch of damage

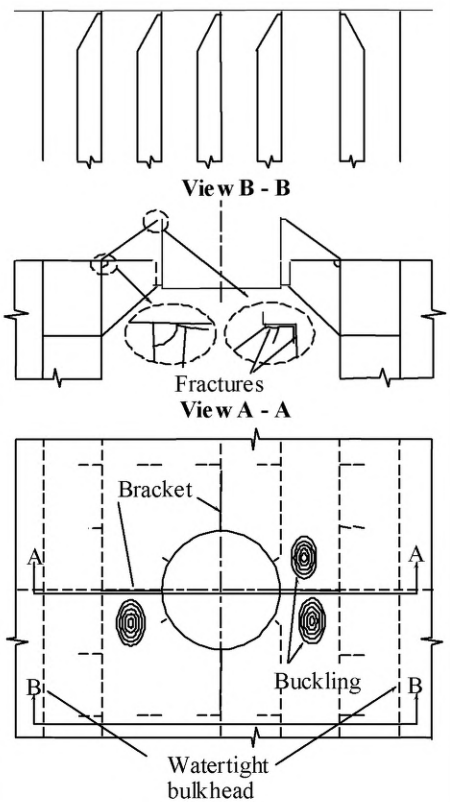

Sketch of repair

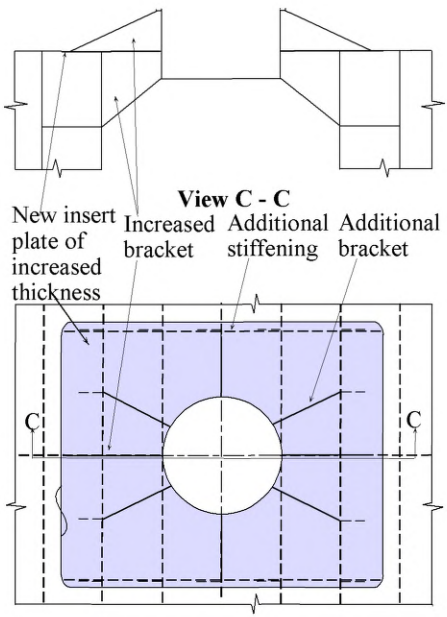

Notes on possible cause of damage

1. Insufficient deck strengthening (missing base plate).
2. Insufficient strengthening of steering gear foundation.
3. Bolts of steering gear were not sufficiently pre-loaded.

Notes on repairs

1. New insert base plate of increased plate thickness.
2. Additional longitudinal stiffening at base plate edges.
3. Additional foundation brackets above and under deck (star configuration).

Area 3 Stern frame, rudder arrangement and propeller shaft support

Contents

1 General

2 What to look for - Drydock inspection
2.1 Deformation
2.2 Fractures
2.3 Corrosion/Erosion/Abrasion

3 General comments on repair
3.1 Rudder stock and pintles
3.2 Plate structure
3.3 Abrasion of bush and sleeve
3.4 Assembling of rudders
3.5 Repair of propeller boss and stern tube

Figures and/or Photographs - Area 3	
No.	**Title**
Figure 1	Nomenclature for stern frame, rudder arrangement and propeller shaft support
Figure 2	Potential problem areas
Photograph 1	Fractured rudder
Figure 3	Rudder stock repair by welding
Diagram 1	Preheating temperature

Examples of structural detail failures and repairs - Area 3	
Example No.	**Title**
1	Fractures in rudder horn along bottom shell plating
2	Fractures in rudder stock
3	Fractures in connection of palm plate to rudder blade
4	Fractures in rudder plating of semi-spade rudder (short fractures with end located forward of the vertical web)
5	Fractures in rudder plating of semi-spade rudder extending beyond the vertical web
6	Fractures in rudder plating of semi-spade rudder in way of pintle cutout
7	Fractures in side shell plating at the connection to propeller boss
8	Fractures in stern tube at the connection to stern frame

1 General

1.1 The stern frame, possible strut bearing arrangement and connecting structures are exposed to propeller induced vibrations, which may lead to fatigue cracking in areas where stress concentrations occur.

1.2 The rudder and rudder horn are exposed to accelerated and fluctuating stream from the propeller, which may also lead to fatigue cracking in areas where stress concentrations occur.

1.3 In extreme weather conditions the rudder may suffer wave slamming forces causing deformations of rudder stock and rudder horn as well as of the rudder itself.

1.4 Rudder and rudder horn as well as struts (on shafting arrangement with strut bearings) may also come in contact with floating object such as timber-log or ice causing damages similar to those described in **1.3**.

1.5 Since different materials are used in adjacent compartments and structures, accelerated (galvanic) corrosion may occur if protective coating and/or sacrificial anodes are not maintained properly.

1.6 Pre-existing manufacturing internal defects in cast pieces may lead to fatigue cracking.

1.7 A summary of potential problem areas is shown in **Figure 2**.

1.8 A complete survey of the rudder arrangement is only possible in drydock. However, in some cases a survey including a damage survey can be carried out afloat by divers or with a trimmed ship.

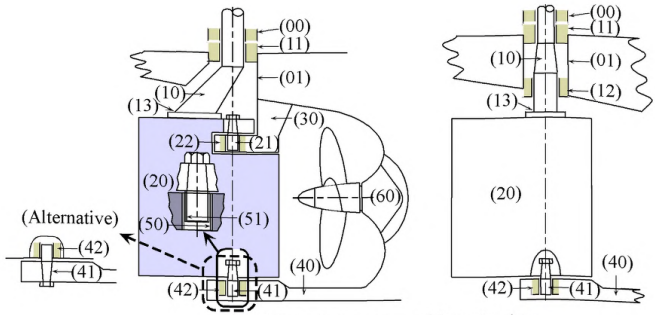

(a) Rudders supported by sole piece

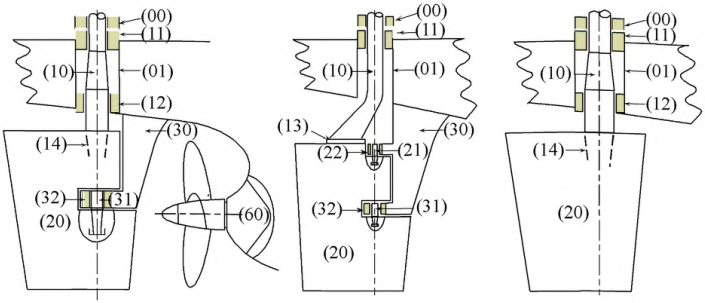

(b) Semi-spade rudders **(c) Spade rudder**

Nomenclature

(00)Rudder carrier (01)Rudder trunk (10)Rudder stock (11)Carrier bearing
(12)Neck bearing (13)Horizontal coupling(Flange coupling) (14)Cone coupling
(20)Rudder blade (21)Upper pintle (22)Upper pintle bearing
(30)Rudder horn (31)Horn pintle (32)Horn pintle bearing
(40)Sole piece (41)Bottom pintle (42)Bottom pintle bearing
(50)Bush (51)Sleeve(Liner)
(60)Propeller boss(Stern tube casting) (70)Propeller shaft bracket(Tail shaft strut)

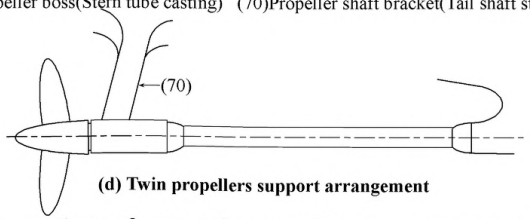

(d) Twin propellers support arrangement

Figure 1 Nomenclature for stern frame, rudder arrangement and propeller shaft support

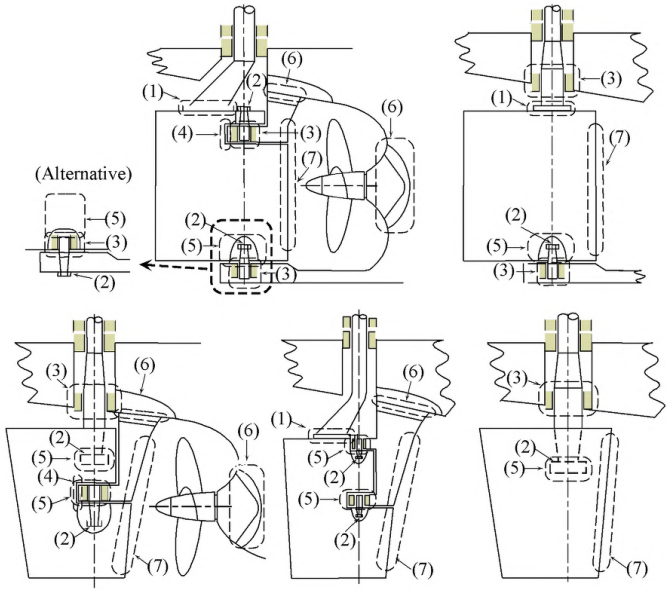

Damage to look for:
(1)Fractures and loose coupling bolts
(2)Loose nut
(3)Wear(excessive bearing clearance)
(4)Fractures in way of pintle cutout
(5)Fractures in way of removable access plate
(6)Fractures
(7)Erosion

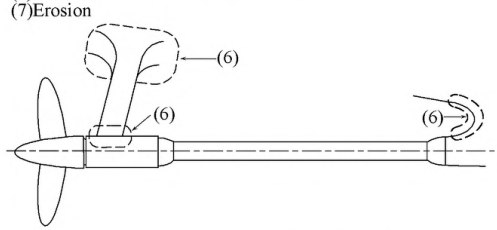

Figure 2 Potential problem areas

2 What to look for - Drydock inspection

2.1 Deformations

2.1.1 Rudder blade, rudder stock, rudder horn and propeller boss/brackets have to be checked for deformations.

2.1.2 Indications of deformation of rudder stock/rudder horn could be found by excessive clearance.

2.1.3 Possible twisting deformation or slipping of cone connection can be observed by the difference in angle between rudder and tiller.

2.1.4 If bending or twisting deformation is found, the rudder has to be dismounted for further inspection.

2.2 Fractures

2.2.1 Fractures in rudder plating should be looked for at slot welds, welds of removable part to the rudder blade, and welds of the access plate in case of vertical cone coupling between rudder blade and rudder stock and/or pintle. Such welds may have latent defects due to the limited applicable welding procedure. Serious fractures in rudder plating may cause loss of rudder.

2.2.2 Fractures should be looked for at weld connection between rudder horn, propeller boss and propeller shaft brackets, and stern frame.

2.2.3 Fractures should be looked for at the upper and lower corners in way of the pintle recess in case of semi-spade rudders. Typical fractures are shown in **Examples 3** to **5**.

2.2.4 Fractures should be looked for at the transition radius between rudder stock and horizontal coupling (palm) plate, and the connection between horizontal coupling plate and rudder blade in case of horizontal coupling. Typical fractures are shown in **Examples 1** and **2**. Fatigue fractures should be looked for at the palm plate itself in case of loosened or lost coupling bolts.

2.2.5 Fractures should be looked for in the rudder plating in way of the internal stiffening structures since (resonant) vibrations of the plating may have occurred.

2.2.6 If the rudder stock is deformed, fractures should be looked for in rudder stock by nondestructive examinations before commencing repair measures, in particular in and around the keyway, if any.

2.3 Corrosion/Erosion/Abrasion

2.3.1 Corrosion/erosion (such as deep pitting corrosion) should be looked for in rudder/rudder horn plating, especially in welds. In extreme cases the corrosion /erosion may cause a large fracture as shown in **Photograph**

1.



Photograph 1
Fractured rudder

2.3.2 The following should be looked for on rudder stock and pintle:
- Excessive clearance between sleeve and bush of rudder stock/pintle beyond the allowable limit specified by the Classification Society.
- Condition of sleeve. If the sleeve is loose, ingress of water may have caused corrosion.
- Deep pitting corrosion in the rudder stock and pintle adjacent to the stainless steel sleeve.
- Slipping of rudder stock cone coupling. For a vertical cone coupling with hydraulic pressure connection, sliding of the rudder stock cone in the cast piece may cause severe surface damages.
- Where a stainless steel liner/sleeve/cladding for the pintle/rudder stock is fitted into a stainless steel bush, an additional check should be made for crevice corrosion.

3 General comments on repair

3.1 Rudder stock and pintles

3.1.1 If rudder stock is twisted due to excessive forces such as contact or grounding and has no additional damages (fractures etc.) or other significant deformation, the stock usually can be used. The need for repair or heat treatment of the stock will depend on the amount of twist in the stock according to the requirements of the Classification Society. The keyway, if any, has to be milled in a new position.

3.1.2 Rudder stocks with bending deformations, not having any fractures may be repaired depending on the size of the deformation either by warm or by cold straightening in an approved workshop according to a procedure approved by the Classification Society. In case of warm straightening, as a guideline, the temperature should usually not exceed the heat treatment temperature of 530-580°C.

3.1.3 In case of fractures on a rudder stock with deformations, the stock may be used again depending on the nature and extent of the fractures. If a welding repair is considered acceptable, the fractures are to be removed by machining/grinding and the welding is to be based on an approved welding procedure together with post weld heat treatment as required by the Classification Society.

3.1.4 Rudder stocks and/or pintles may be repaired by welding replacing wasted material by similar weld material provided its chemical composition is suitable for welding, i.e. the carbon content must usually not exceed 0.25%. The welding procedures are to be identified in function of the carbon equivalent (Ceq). After removal of the wasted area (corrosion, scratches, etc.) by machining and/or grinding the build-up welding has to be carried out by an automatic spiral welding according to an approved welding procedure. The welding has to be extended over the area of large bending moments (rudder stocks). In special cases post weld heat treatment has to be carried out according to the requirements of the Classification Society. After final machining, a sufficient number of layers of welding material have to remain on the rudder stock/pintle. A summary of the most important steps and conditions of this repair is shown in the **Figure 3**.

3.1.5 In case of rudder stocks with bending loads, fatigue fractures in way of the transition radius between the rudder stock and the horizontal coupling plate can not be repaired by local welding. A new rudder stock with a modified transition geometry has to be manufactured, as a rule (See **Example 1**). In exceptional cases a welding repair can be carried out based on an approved welding procedure. Measures have to be taken to avoid a coincidence of the metallurgical notch of the heat affected zone with the stress concentration in the radius' area. Additional surveys of the repair (including non-destructive fracture examination) have to be carried out in reduced intervals.

Replacing wasted material by similar ordinary weld material

- Removal of the wasted area by machining and/or grinding, non-destructive examination for fractures (magnetic particle inspection preferred)
- Build-up welding by automatic spiral welding (turning device) according to an approved welding procedure (weld process, preheating, welding consumables, etc.)
- Extension of build-up welding over the area of **large bending moments** (**shafts**) according to the sketch

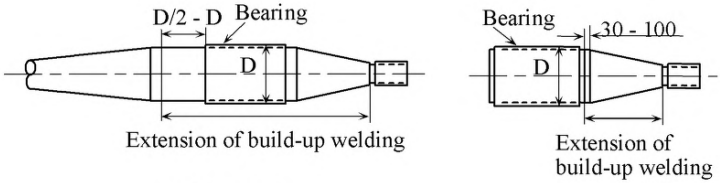

Rudder stock **Pintle**

- Sufficient number of weld layers to compensate removed material, at least one layer in excess (heat treatment of the remaining layer)
- Transition at the end of the build-up welding according to the following sketch

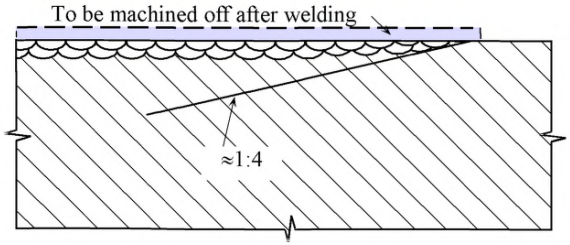

- Post weld heat treatment if required in special cases (never for stainless steel cladding on ordinary steel)
- Final machining, at least two layers of welding material have to remain on the rudder stock (See the above sketch)
- Non-destructive fracture examination

Figure 3 Rudder stock repair by welding

3.2 Plate structure

3.2.1 Fatigue fractures in welding seams (butt welds) caused by welding failures (lack of fusion) can be gouged out and rewelded with proper root penetration.

3.2.2 In case of fractures, probably caused by (resonant) vibration, vibration analysis of the rudder plating has to be performed, and design modifications have to be carried out in order to change the natural frequency of plate field.

3.2.3 Short fatigue fractures starting in the lower and/or upper corners of the pintle recess of semi-spade rudders that do not propagate into vertical or horizontal stiffening structures may be repaired by gouging out and welding. The procedure according to **Example 3** should be preferred.

In case of longer fatigue fractures starting in the lower and/or upper corners of the pintle recess of semi-spade rudders that propagate over a longer distance into the plating, thorough check of the internal structures has to be carried out. The fractured parts of the plating and of the internal structures, if necessary, have to be replaced by insert plates. A proper welding connection between the insert plate and the internal stiffening structure is very important (See **Examples 4** and **5**).

The area of the pintle recess corners has to be ground smooth after the repair. In many cases a modification of the radius, an increased thickness of plating and an enhanced steel quality may be necessary.

3.2.4 For the fractures at the connection between plating and cast pieces an adequate preheating is necessary. The preheating temperature is to be determined taking into account the following parameters:

- chemical composition (carbon equivalent C_{eq})
- thickness of the structure
- hydrogen content in the welding consumables
- heat input

3.2.5 As a guide, the preheating temperature can be obtained from **Diagram 1** using the plate thickness and carbon equivalent of the thicker structure.

3.2.6 All welding repairs are to be carried out using qualified/approved welding procedures.

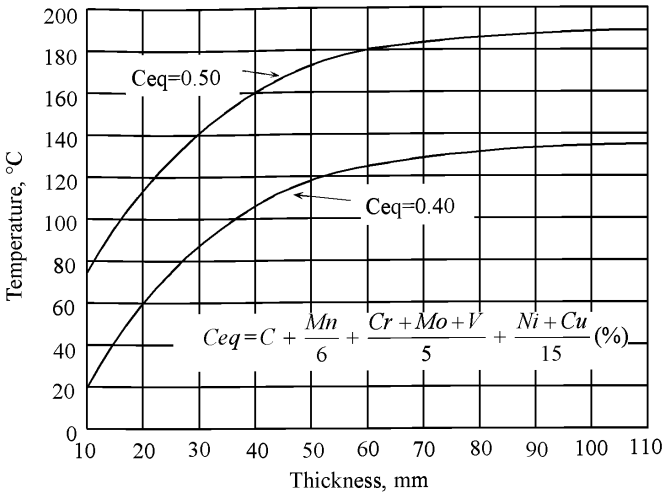

Diagram 1 Preheating temperature

3.3 Abrasion of bush and sleeve

Abrasion rate depends on the features of the ship such as frequency of maneuvering. However, if excessive clearance is found within a short period, e.g. 5 years, alignment of the rudder arrangement and the matching of the materials for sleeve and bush should be examined together with the replacement of the bush.

3.4 Assembling of rudders

After mounting of all parts of the rudder, nuts of rudder stocks with vertical cone coupling plates and nuts of pintles are to be effectively secured. In case of horizontal couplings, bolts and their nuts are to be secured either against each other or both against the coupling plates.

3.5 Propeller boss and stern tube

Repair examples for propeller boss and stern tube are shown in **Examples 7**and **8.** Regarding the welding reference is made to **3.1.4**, **3.2.4** and **3.2.5**.

BULK CARRIERS	Guidelines for Surveys, Assessment and Repair of Hull Structure	
Part 2	Fore and aft end regions	Example No.
Area 3	Stern frame, rudder arrangement and propeller shaft support	1
Detail of damage	Fractures in rudder horn along bottom shell plating	

Sketch of damage

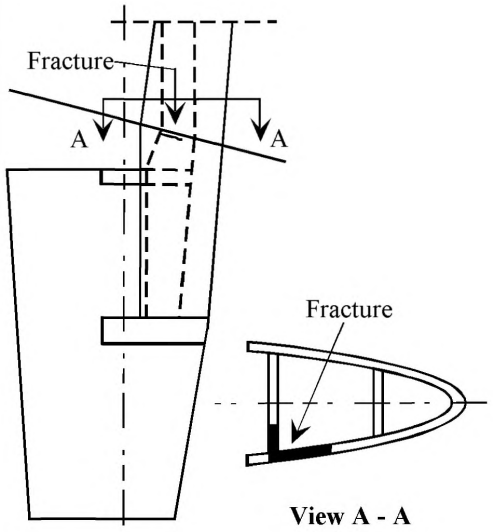

Sketch of repair

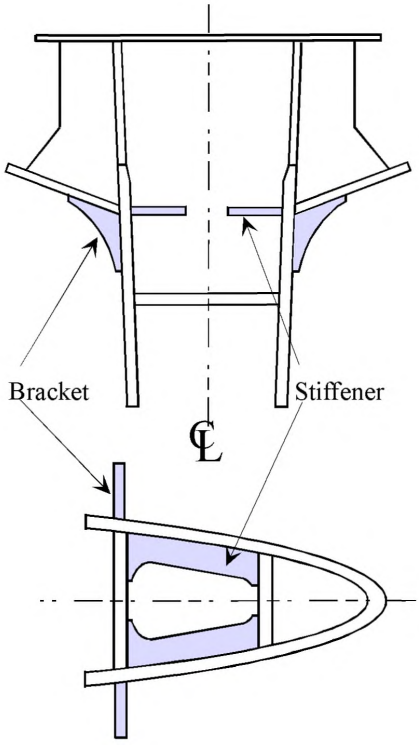

Notes on possible cause of damage

1. Insufficient strength due to poor design.

Notes on repairs

1. Fractured plating to be veed-out and rewelded.
2. Fractured plating to be cropped and renewed if considered necessary.
3. Reinforcement should be considered if considered necessary.

BULK CARRIERS	Guidelines for Surveys, Assessment and Repair of Hull Structure	
Part 2	Fore and aft end regions	Example No.
Area 3	Stern frame, rudder arrangement and propeller shaft support	2
Detail of damage	Fractures in rudder stock	

Sketch of damage

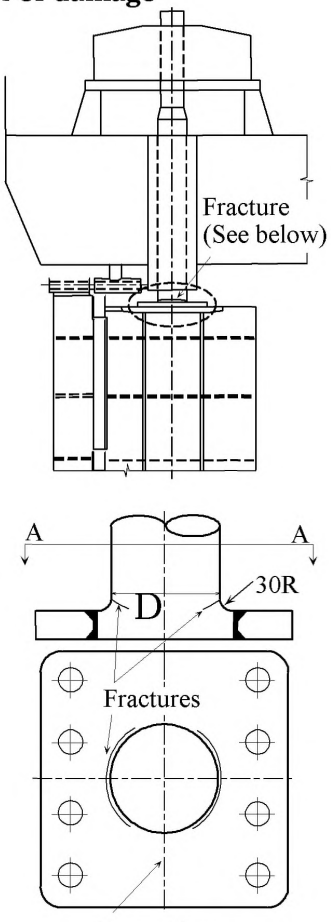

View A - A

Sketch of repair

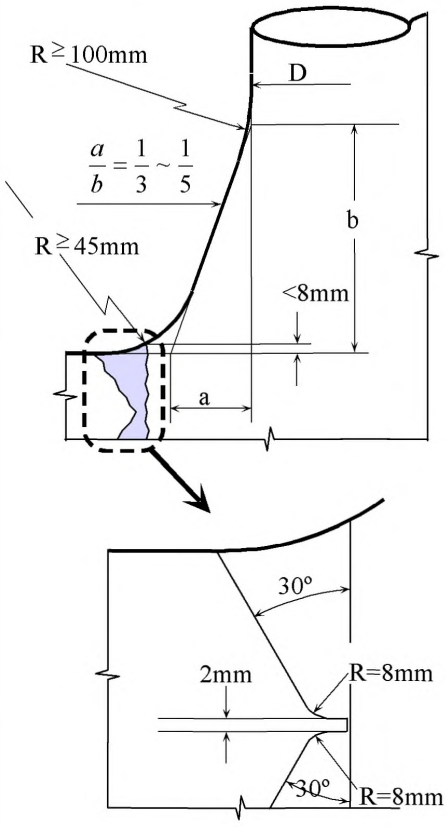

Notes on possible cause of damage

1. Inadequate design for stress concentration in rudder stock.

Notes on repairs

1. Modification of detail design of rudder stock to reduce the stress concentration.

BULK CARRIERS	Guidelines for Surveys, Assessment and Repair of Hull Structure	
Part 2	**Fore and aft end regions**	**Example No.**
Area 3	**Stern frame, rudder arrangement and propeller shaft support**	**3**
Detail of damage	Fractures in connection of palm plate to rudder blade	

Sketch of damage

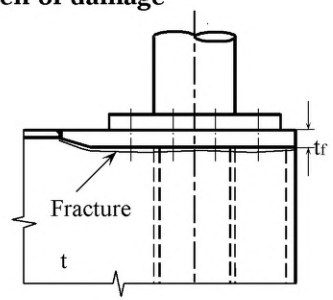

Sketch of repair

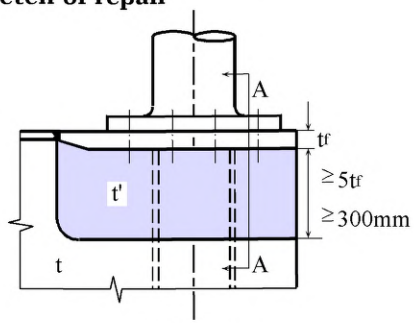

View A - A

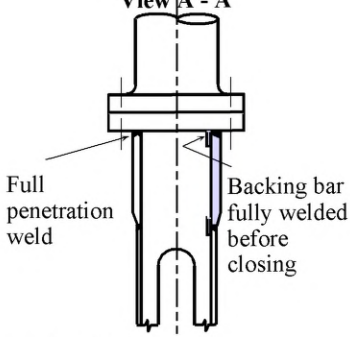

t = plate thickness, mm

t_f = actual flange thickness, mm

$t = \frac{t_f}{3} + 5$, mm, where $t_f \leq 50$mm

$t = 3\sqrt{t_f}$, mm, where $t_f \geq 50$mm

Notes on possible cause of damage

1. Inadequate connection between palm plate and rudder blade plating (insufficient plating thickness and/or insufficient fillet weld).

Notes on repairs

1. Modification of detail design of the connection by increasing the plate thickness and full penetration welding.

BULK CARRIERS	Guidelines for Surveys, Assessment and Repair of Hull Structure	
Part 2	Fore and aft end regions	Example No.
Area 3	Stern frame, rudder arrangement and propeller shaft support	4
Detail of damage	Fractures in rudder plating of semi-spade rudder (short fracture with end located forward of the vertical web)	

Sketch of damage

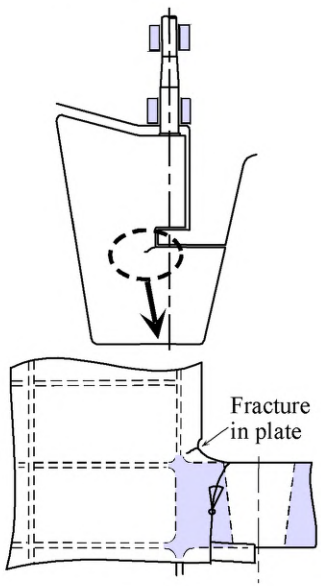

Sketch of repair

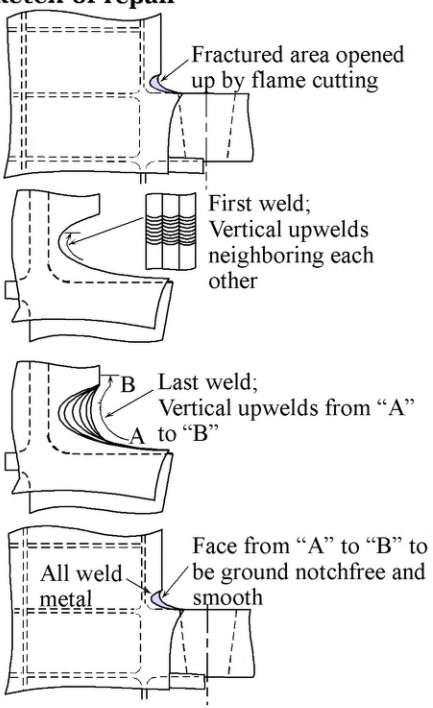

Notes on possible cause of damage

1. Stress concentration due to inadequate local design and/or fabrication notches in way of the butt weld between cast piece and plating.

Notes on repairs

1. Grooving-out and welding of the fracture is not always adequate (metallurgical notch in way of a high stressed area).
2. In the proposed repair procedure the metallurgical notches are shifted into a zone exposed to lower stresses.
3. After welding a modification of the radius according to the proposal in **Example 5** is to be carried out.
4. In case of very small crack it can be ground off by increasing the radius.

GENERAL CARGO SHIPS	Guidelines for Surveys, Assessment and Repair of Hull Structure	
Part 2	Fore and aft end regions	Example No.
Area 3	Stern frame, rudder arrangement and propeller shaft support	5
Detail of damage	Fractures in rudder plating of semi-spade rudder extending beyond the vertical web	

Sketch of damage

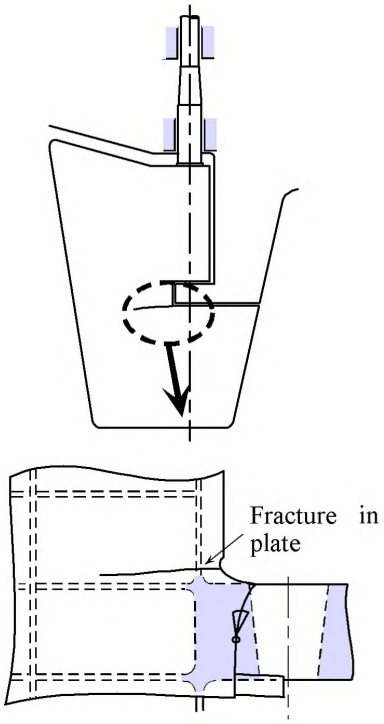

Sketch of repair

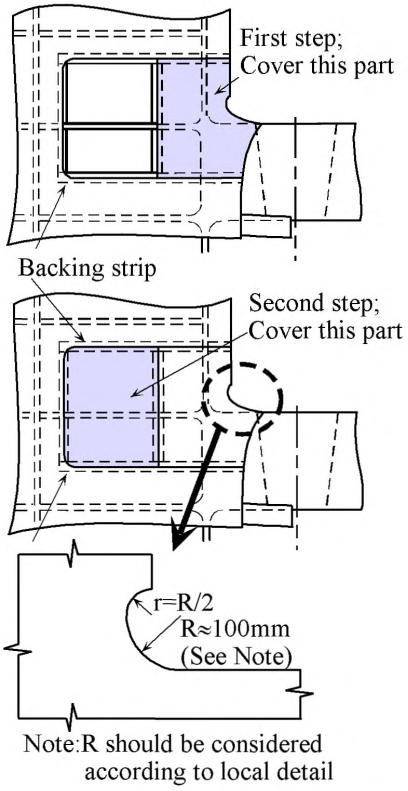

Notes on possible cause of damage

1. Stress concentration due to inadequate local design and/or fabrication notches in way of the butt weld between cast piece and plating.

Notes on repairs

1. Fractured plating is to be cut-out.
2. Internal structures are to be checked.
3. Cut-out is to be closed by an insert plating according to the sketch (welding only from one side is demonstrated).
4. Modification of the radius.
5. In case of a new cast piece, connection with the plating is to be shifted outside the high stress area.

BULK CARRIERS	Guidelines for Surveys, Assessment and Repair of Hull Structure	
Part 2	**Fore and aft end regions**	**Example No.**
Area 3	**Stern frame, rudder arrangement and propeller shaft support**	**6**
Detail of damage	Fractures in rudder plating of semi-spade rudder in way of pintle cutout	

Sketch of damage

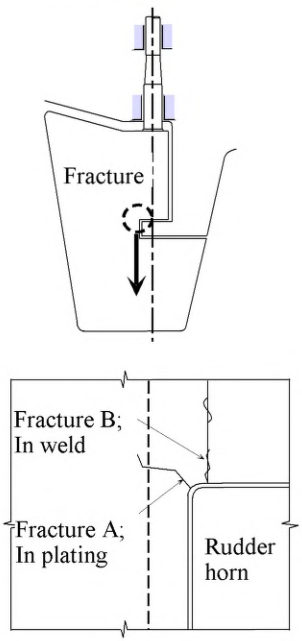

Sketch of repair

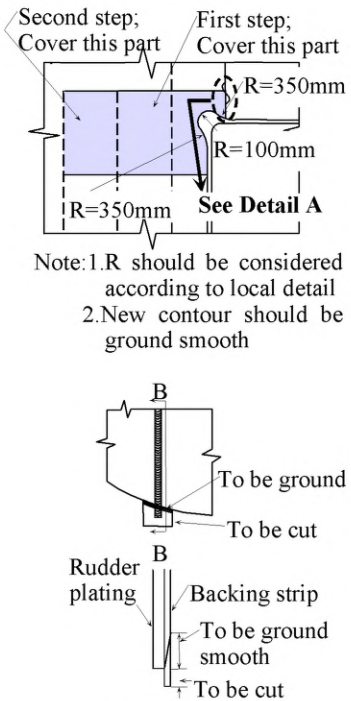

Notes on possible cause of damage

1. Inadequate design for stress concentration in way of pintle bearing (**Fracture A**).
2. Imperfection in welding seam (**Fracture B**).

Notes on repairs

1. Fractured part to be cropped off.
2. Repair by two insert plates of modified, stress releasing contour. For the vertical seam no backing strip is used 100mm off contour, welding from both sides, to be ground after welding.
3. Variant (See **Detail A**): Repair as mentioned under 2 with the use of backing strip for the compete vertical seam. After welding backing strip partly removed by grinding.

BULK CARRIERS	Guidelines for Surveys, Assessment and Repair of Hull Structure	
Part 2	Fore and aft end regions	Example No.
Area 3	Stern frame, rudder arrangement and propeller shaft support	7
Detail of damage	Fractures in side shell plating at the connection to propeller boss	

Sketch of damage

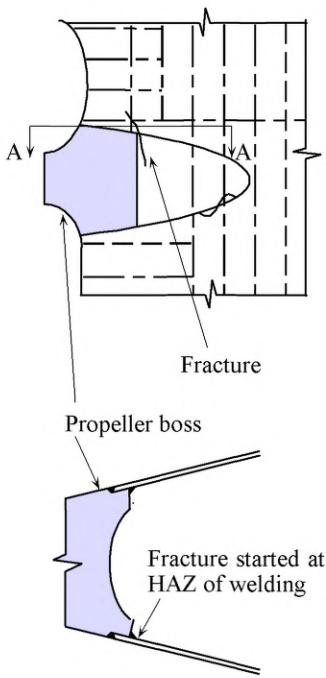

View A - A

Sketch of repair

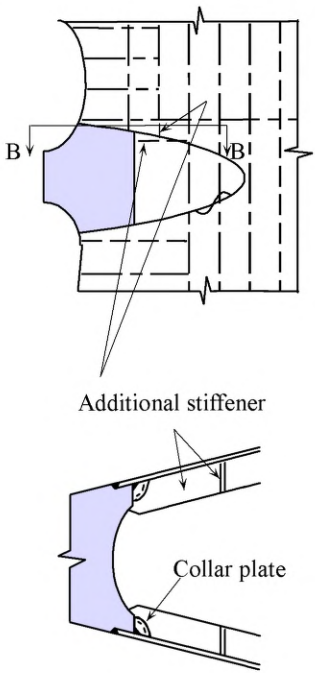

View B - B

Notes on possible cause of damage

1. Fatigue fracture due to vibration.

Notes on repairs

1. Fractured side shell plating is to be cropped and part renewed.
2. Additional stiffeners are to be provided.
3. Collar plate is to be provided.

BULK CARRIERS	Guidelines for Surveys, Assessment and Repair of Hull Structure	
Part 2	Fore and aft end regions	Example No.
Area 3	Stern frame, rudder arrangement and propeller shaft support	8
Detail of damage	Fractures in stern tube at the connection to stern frame	

Sketch of damage

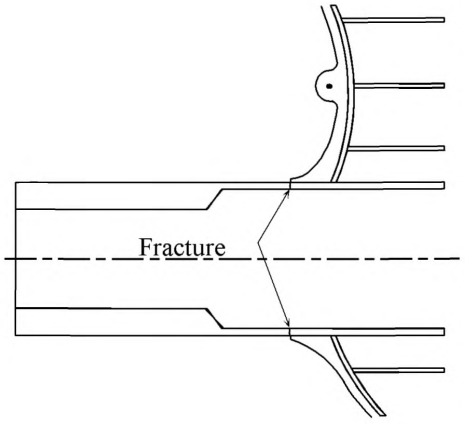

Sketch of repair

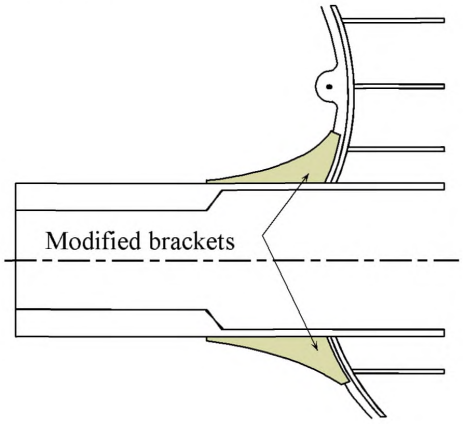

Notes on possible cause of damage

1. Fatigue fracture due to vibration.

Notes on repairs

1. Fractured tube is to be veed-out and welded from both sides.
2. Brackets are to be replaced by modified brackets with soft transition.

Part 3 Machinery and accommodation spaces

Contents

Area 1 Engine room structure
Area 2 Accommodation structure

Area 1 Engine room structure

Contents

1 General

2 What to look for - Engine room inspection
2.1 Material wastage
2.2 Fractures

3 What to look for - Tank inspection
3.1 Material wastage
3.2 Fractures

4 General comments on repair
4.1 Material wastage
4.2 Fractures

Examples of structural detail failures and repairs - Area 1	
Example No.	**Title**
1	Fractures in brackets at main engine foundation
2	Corrosion in bottom plating under sounding pipe in way of bilge storage tank
3	Corrosion in bottom plating under inlet/suction pipe in way of bilge storage tank

1 General

The engine room structure is categorized as follows:

- Boundary structure which consists of upper deck, bulkhead, inner bottom plating, funnel, etc.
- Deep tank structure
- Double bottom tank structure

The boundary structure can generally be inspected routinely and therefore any damages found can usually be easily rectified. Deep tank and double bottom structures, owing to access difficulties, generally cannot be inspected routinely. Damage of these structures is usually only found during dry docking or when a leakage is in evidence.

2 What to look for - Engine room inspection

2.1 Material wastage

2.1.1 Tank top plating, shell plating and bulkhead plating adjacent to the tank top plating may suffer severe corrosion caused by leakage or lack of maintenance of sea water lines.

2.1.2 Bilge well should be cleaned and inspected carefully for heavy pitting corrosion caused by sea water leakage at gland packing or maintenance operation of machinery.

2.1.3 Part of the funnel forming the boundary structure often suffer severe corrosion which may impair fire fighting in engine room and weathertightness.

3 What to look for - Tank inspection

3.1 Material wastage

3.1.1 The environment in bilge tanks, where mixture of oily residue and seawater is accumulated, is more corrosive when compared to other double bottom tanks. Severe corrosion may result in holes in the bottom plating, especially under sounding pipe. Pitting corrosion caused by seawater entered from air pipe is seldom found in cofferdam spaces.

3.2 Fractures

3.2.1 In general, deep tanks for fresh water or fuel oil are located in engine room. The structure in these tanks often sustains fractures due to vibration. Fracture of double bottom structure in engine room is seldom found due to its high structural rigidity.

4 General comments on repair

4.1 Material wastage

4.1.1 Where part of the structure has deteriorated to the permissible minimum thickness, then the affected area is to be cropped and renewed.

Repair work in double bottom will require careful planning in terms of accessibility and gas freeing is required for repair work in fuel oil tanks.

4.2 Fractures

4.2.1 For fatigue fractures caused by vibration, in additional to the normal repair of the fractures, consideration should be given to modification of the natural frequency of the structure to avoid resonance. This may be achieved by providing additional structural reinforcement, however, in many cases, a number of tentative tests may be required to reach the desired solution.

BILK CARRIERS	Guidelines for Surveys, Assessment and Repair of Hull Structure	
Part 3	Machinery and accommodation spaces	Example No.
Area 1	Engine room structure	1
Detail of damage	Fractures in brackets at main engine foundation	

Sketch of damage

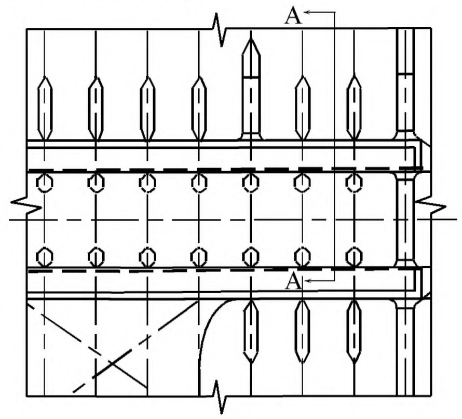

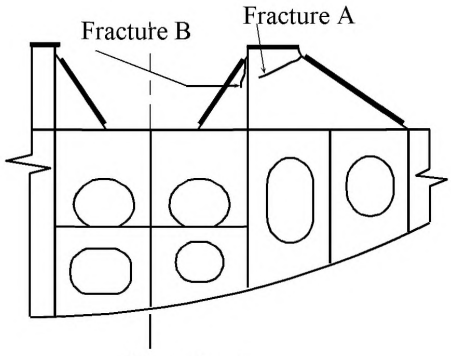

View A - A

Sketch of repair

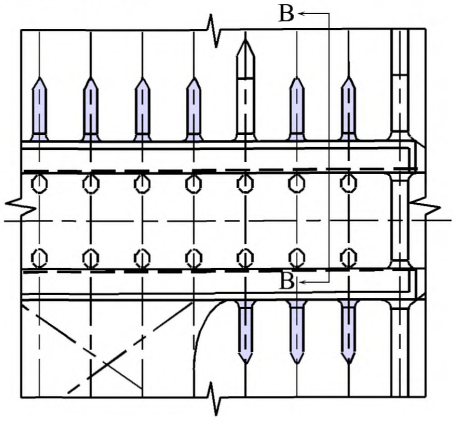

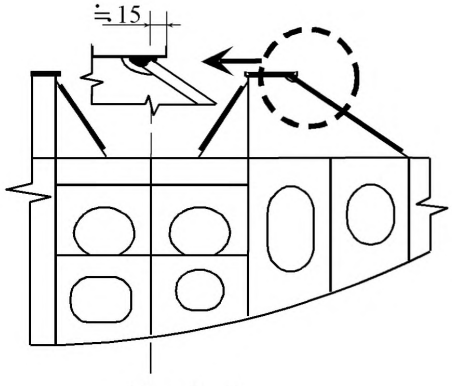

View B - B

Notes on possible cause of damage

1. Vibration of main engine.
2. Insufficient strength of brackets at main engine foundation.
3. Insufficient pre-load bolts.

Notes on repairs

1. Fractures are to be veed-out and rewelded.
2. New modified brackets at main engine foundation.
3. Or insert pieces and additional flanges to increase section modulus of the brackets.

BULK CARRIERS	Guidelines for Surveys, Assessment and Repair of Hull Structure	
Part 3	**Machinery and accommodation spaces**	**Example No.**
Area 1	**Engine room structure**	**2**
Detail of damage	Corrosion in bottom plating under sounding pipe in way of bilge storage tank in engine room	

Sketch of damage

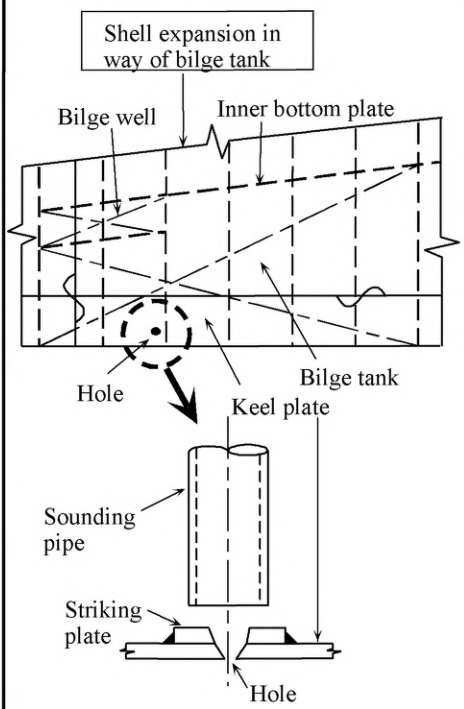

Sketch of repair

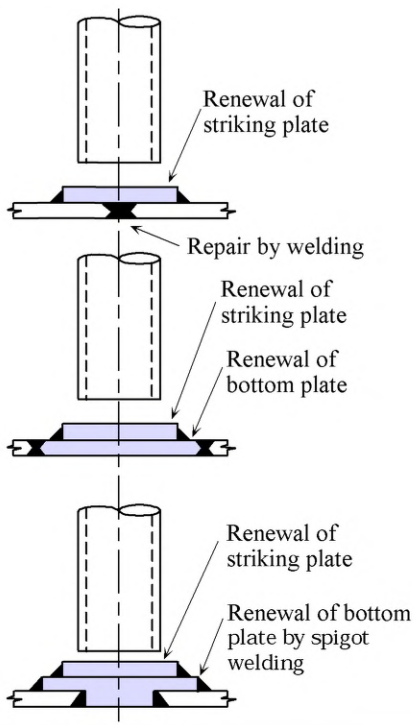

Notes on possible cause of damage

1. Heavy corrosion of bottom plating under sounding pipe.

Notes on repairs

1. Corroded striking plating should be renewed.
2. Bottom plate should be repaired depending on the condition of corrosion.
   (Note)
   Repair by spigot welding can be applied to the structure only when the stress level is considerably low. Generally this procedure cannot be applied to the repair of bottom plating of ballast tanks in cargo hold region.

BULK CARRIERS	Guidelines for Surveys, Assessment and Repair of Hull Structure	
Part 3	Machinery and accommodation spaces	Example No.
Area 1	Engine room structure	3
Detail of damage	Corrosion in bottom plating under inlet/suction/pipe in way of bilge tank in engine room	

Sketch of damage

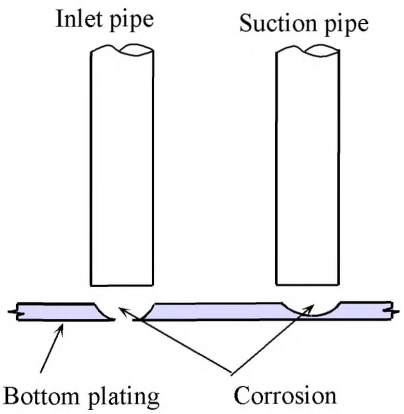

Sketch of repair

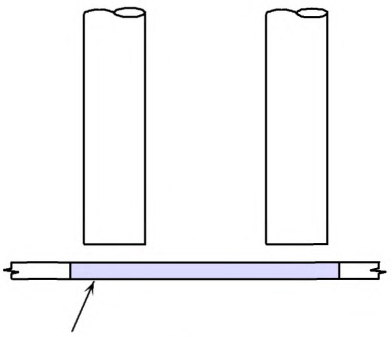

Notes on possible cause of damage

1. Heavy corrosion of bottom plating under the inlet/suction pipe.

Notes on repairs

1. Corroded bottom plating is to be cropped and part renewed. Thicker plate is preferable.
2. Replacement of pipe end by enlarged conical opening (similar to suction head in ballast tank) is preferable.

Area 2 Accommodation structure

Contents

1 General

Figures and/or Photographs - Area 1	
No.	**Title**
Photograph 1	Corroded accommodation house side structure

1 General

Corrosion is the main concern in accommodation structure and deck houses of aging ships. Owing to the lesser thickness of the structure plating, corrosion can propagate through the thickness of the plating resulting in holes in the structure.

Severe corrosion may be found in exposed deck plating and deck house side structure adjacent to the deck plating where water is liable to accumulate (See **Photograph 1**). Corrosion may also be found in accommodation bulkheads around cutout for fittings, such as doors, side scuttles, ventilators, etc., where proper maintenance of the area is relatively difficult. Deterioration of the bulkheads including fittings may impair the integrity of weathertightness.

Fatigue fractures caused by vibration may be found, in the structure itself and in various stays of the structures, mast, antenna etc. For such fractures, consideration should be given to modify the natural frequency of the structure by providing additional reinforcement during repair.



Photograph 1 Corroded accommodation house side structure

gost.e-ecolog.ru