РОССИЙСКИЙ МОРСКОЙ РЕГИСТР СУДОХОДСТВА
RUSSIAN MARITIME REGISTER OF SHIPPING

ПРИЛОЖЕНИЕ К ПРАВИЛАМ И РУКОВОДСТВАМ
РОССИЙСКОГО МОРСКОГО РЕГИСТРА СУДОХОДСТВА

# ПРОЦЕДУРНЫЕ ТРЕБОВАНИЯ, УНИФИЦИРОВАННЫЕ ИНТЕРПРЕТАЦИИ И РЕКОМЕНДАЦИИ МЕЖДУНАРОДНОЙ АССОЦИАЦИИ КЛАССИФИКАЦИОННЫХ ОБЩЕСТВ

SUPPLEMENT TO RULES AND GUIDELINES
OF RUSSIAN MARITIME REGISTER OF SHIPPING

# IACS PROCEDURAL REQUIREMENTS, UNIFIED INTERPRETATIONS AND RECOMMENDATIONS

НД № 2-020101-099-R-E

2017

gost.e-ecolog.ru

Настоящее Приложение к правилам и руководствам Российского морского регистра судоходства содержит обязательные для применения процедурные требования и унифицированные интерпретации Международной ассоциации классификационных обществ (МАКО), а также рекомендации МАКО, ссылки на которые имеются в правилах и других нормативных документах Регистра.

Все материалы публикуются на английском языке.

Данный документ публикуется в электронном виде отдельным изданием и является обязательным Приложением к правилам Регистра.

The present Supplement to rules and guidelines of Russian Maritime Register of Shipping contains IACS Procedural Requirements and IACS Unified Interpretations compulsory for implementation, and IACS recommendations, which are referred to in the rules and other normative documents of the Register.

All materials are published in English.

The present document is published in electronic format as a separate edition and is a compulsory Supplement to the Register rules.

# СОДЕРЖАНИЕ
# CONTENTS

## Процедурные требования МАКО
## IACS Procedural Requirements


| Номер документа<br>Document number | Название документа<br>Document name | Примечание<br>Note |
|---|---|---|
| 1. PR No. 38 (May 2013) | Procedure for calculation and verification of the Energy Efficiency Design Index (EEDI) | Document is applied from 1 July 2013 |

Применение: Руководство по применению положений международной конвенции МАРПОЛ 73/78, часть VI, пункт 2.6.16.
Application: Guidelines on the Application of Provisions of the International Convention MARPOL 73/78, part VI, para 2.6.16.


## Унифицированные интерпретации МАКО
## IACS Unified Interpretations


| Номер документа<br>Document number | Название документа<br>Document name | Примечание<br>Note |
|---|---|---|
| 1. SC 191 (Rev.7 Jan 2015)<br>(Corr.1 June 2016) | IACS Unified Interpretations (UI) SC 191 for the application of amended SOLAS regulation II-1/3-6 (resolution MSC.151(78)) and revised Technical provisions for means of access for Inspections (resolution MSC.158(78)) | Document is applied from 1 July 2016 |

Применение: Правила классификации и постройки морских судов (2017), часть III, пункт 7.14.2.
Application: Rules for the Classification and Construction of Sea-Going Ships (2017), Part III, para 7.14.2.

| | | |
|---|---|---|
| 2. SC 226 (Rev.1 Dec 2012) | IACS Unified Interpretations (UI) on the application of SOLAS regulations to conversions of Single-Hull Oil Tankers to Double-Hull Oil Tankers or Bulk Carriers | Document is applied from 1 January 2014 |

Применение: Правила классификации и постройки морских судов (2017), часть I, пункт 3.1.3.
Application: Rules for the Classification and Construction of Sea-Going Ships (2017), Part I, para 3.1.3.

| | | |
|---|---|---|
| 3. SC 244 (Rev.1 Nov 2012)<br>(Corr.1 Nov 2015) | Load testing of hooks for primary release of lifeboats and rescue boats | Document is applied from 1 January 2014 |

Применение: Правила по оборудованию морских судов (2017), часть II, пункт 1.3.2.1.
Application: Rules for the Equipment of Sea-Going Ships (2017), Part II, para 1.3.2.1.

| | | |
|---|---|---|
| 4. SC 249 (Rev.1 Feb 2013) | Implementation of SOLAS II-1, Regulation 3-5 and MSC.1/Circ.1379 | Document is applied from 1 July 2013 |

Применение: Правила технического наблюдения за постройкой судов и изготовлением материалов и изделий для судов, часть V, пункт 19.1.7.
Application: Rules for Technical Supervision during Construction of Ships and Manufacture of Materials and Products for Ships, Part V, para 19.1.7.

| | | |
|---|---|---|
| 5. MPC2 (Rev. 1 Aug 2015) | Operational manuals for oil discharge monitoring and control systems | Document is applied from 1 July 2016 |

Применение: Правила технического наблюдения за постройкой судов и изготовлением материалов и изделий для судов, часть V, пункт 19.7.2.1.
Application: Rules for Technical Supervision during Construction of Ships and Manufacture of Materials and Products for Ships, Part V, para 19.7.2.1.

6. MPC6 (Rev. 1 Aug 2015) — Calculation of aggregate capacity of SBT — Document is applied from 1 July 2016

Применение: Руководство по применению положений международной конвенции МАРПОЛ 73/78, часть II, пункт 3.5.1.1.

Application: Guidelines on the Application of Provisions of the International Convention MARPOL 73/78, part VI, para 3.5.1.1.

7. MODU 1 (Rev.1 Oct 2015) — IACS Unified Interpretations for the application of MODU Code Chapter 2 paragraphs 2.1, 2.2, 2.3, 2.4 and revised technical provisions for means of access for inspections (resolution MSC.158(78)) — Document is applied from 1 January 2017

Применение: Правила классификации, постройки и оборудования плавучих буровых установок и морских стационарных платформ (2014), часть III, пункт 9.3.1.1.

Application: Rules for the Classification, Construction and Equipment of Mobile Offshore Drilling Units and Fixed Offshore Platforms (2014), Part III, para 9.3.1.1.

## Рекомендации МАКО
## IACS Recommendations

| Номер документа<br>Document number | Название документа<br>Document name |
|---|---|

1. Rec. No. 47 (Rev.7 June 2013) — Shipbuilding and Repair Quality Standard

Применение: Правила классификационных освидетельствований судов в эксплуатации (2017), часть I (пункт 5.13), приложение 2 (пункт 5.1.12), приложение 3 (пункт 7).
Правила технического наблюдения за постройкой судов и изготовлением материалов и изделий для судов, часть I, приложение 3 (пункт 7.4)

Application: Rules for the Classification Surveys of Ships in Service (2017), Part I (para 5.13), Appendix 2 (para 5.1.12), Appendix 3 (para 7).
Rules for Technical Supervision during Construction of Ships and Manufacture of Materials and Products for Ships, Part I, Appendix 3 (para 7.4)

2. Rec. No. 55 (Rev.1 June 2016) — General Cargo Ships – Guidance for Surveys, Assessment and Repair of Hull Structure

Применение: Правила классификационных освидетельствований судов в эксплуатации (2017), часть I (пункт 5.13), приложение 2 (пункт 5.1.12), приложение 3 (пункт 6).
Методические рекомендации по техническому наблюдению за ремонтом морских судов с Приложениями (2016), Приложение 1.

Application: Rules for the Classification Surveys of Ships in Service (2017), Part I (para 5.13), Appendix 2 (para 5.1.12), Appendix 3 (para 6).

3. Rec. No. 76 (Corr.1 Sept 2007) — IACS Guidelines for Surveys, Assessment and Repair of Hull Structure – Bulk Carriers

Применение: Правила классификационных освидетельствований судов в эксплуатации (2017), часть I (пункт 5.13), приложение 2 (пункт 5.1.12), приложение 3 (пункт 2).
Методические рекомендации по техническому наблюдению за ремонтом морских судов с Приложениями (2016), Приложение 1.

Application: Rules for the Classification Surveys of Ships in Service (2017), Part I (para 5.13), Appendix 2 (para 5.1.12), Appendix 3 (para 2).

4. Rec. No. 96 (April 2007) — Double Hull Oil Tankers – Guidelines for Surveys, Assessment and Repair of Hull Structures

Применение: Правила классификационных освидетельствований судов в эксплуатации (2017), часть I (пункт 5.13), приложение 2 (пункт 5.1.12), приложение 3 (пункт 10).
Методические рекомендации по техническому наблюдению за ремонтом морских судов с Приложениями (2016), Приложение 1.

Application: Rules for the Classification Surveys of Ships in Service (2017), Part I (para 5.13), Appendix 2 (para 5.1.12), Appendix 3 (para 10).

5. Rec. No. 132 (Dec 2013) — Human Element Recommendations for structural design of lighting, ventilation, vibration, noise, access & egress arrangements

Применение: Руководство по освидетельствованию условий труда и отдыха моряков на соответствие требованиям Конвенции 2006 года о труде в морском судоходстве (2016), пункты 2.1.22, 4.7.3.
Руководство по освидетельствованию жилых помещений экипажа (2015), пункты 2.1.16, 4.1.2.8.

Application: Guidelines on On-board Maritime Labour Convention, 2006 (MLC) Inspection (2016), paras 2.1.22, 4.7.3.
Guidelines on On-board Inspection for Crew Accomodation (2015), paras 2.1.16, 4.1.2.8.

6. Rec. No. 142 (June 2016) LNG Bunkering Guidelines

Применение: Правила классификации и постройки морских судов (2017), часть XVII, пункт 11.2.2.

Application: Rules for the Classification and Construction of Sea-Going Ships (2017), Part XVII, para 11.2.2.

7. Rec. No. 146 (Aug 2016) Risk assessment as required by the IGF Code

Применение: Правила классификации и постройки морских судов (2017), часть XVII, пункт 9.1.4.19.

Application: Rules for the Classification and Construction of Sea-Going Ships (2017), Part XVII, para 9.1.4.19.

# ПРОЦЕДУРНЫЕ ТРЕБОВАНИЯ МАКО

# IACS PROCEDURAL REQUIREMENTS

# No. 38 (May 2013) Procedure for calculation and verification of the Energy Efficiency Design Index (EEDI)

**Introduction**

This procedure applies to all cases of Class Societies' involvement in conducting the survey and certification of EEDI in accordance with regulations 5, 6, 7, 8 and 9 of MARPOL Annex VI as a Verifier defined in the *"2012 Guidelines on Survey and Certification of the Energy Efficiency Design Index (EEDI)"* IMO Resolution MEPC 214(63).

**1 Definition**

"Industry Guidelines" means the Industry Guidelines for calculation and verification of the Energy Efficiency Design Index (EEDI) as first submitted to MEPC 64 that may be revised in order to remain in line with the relevant IMO Guidelines MEPC.212(63) and MEPC.214(63).

**2 Scope of the Procedure**

The scope of this procedure is defined in Part I of the Industry Guidelines and corresponds to the calculation and verification of EEDI of cargoships, without considering innovative energy efficient technologies, contracted for construction after 1 July 2013.

**3 Calculation of EEDI**

The procedure to compute the EEDI is documented in Part II of the Industry Guidelines. For the purpose of this Procedural Requirement, calculation of the EEDI is to be performed in accordance with IMO Guidelines MEPC.212(63) and Part II of the Industry Guidelines, as amended.

**4 Verification of EEDI**

The procedure to verify the EEDI is documented in Part III of the Industry Guidelines, together with Appendixes 1, 3, 4 and 5. For the purpose of this Procedural Requirement, verification of the EEDI is to be performed in accordance with IMO Guidelines MEPC.214(63) and Part III of the Industry Guidelines, as amended.
A sample of document to be submitted to the Verifier including additional information for verification is provided in Appendix 2 of the Industry Guidelines.

Attached:

First Industry Guidelines for calculation and verification of the Energy Efficiency Design Index (EEDI)

Note:

1. This Procedural Requirement applies from 1 July 2013.

2. The "contracted for construction" date means the date on which the contract to build the vessel is signed between the prospective owner and the shipbuilder. For further details regarding the date of "contract for construction", refer to IACS Procedural Requirement (PR) No. 29.

End of Document

# FIRST INDUSTRY GUIDELINES FOR CALCULATION AND VERIFICATION OF THE ENERGY EFFICIENCY DESIGN INDEX (EEDI)

## TABLE OF CONTENTS


1 Scope of the Guidelines ..... 2
2 Introduction ..... 3
3 EEDI formula ..... 3
4 Fuel consumption and $CO_2$ emission ..... 3
5 Capacity, power and speed ..... 4
6 Shaft generator and shaft motor ..... 5
7 Weather factor $f_w$ ..... 10
8 Correction factor for ship specific design elements $f_j$ ..... 10
9 Capacity factor $f_i$ ..... 10
10 Cubic capacity correction factor fc ..... 11
11 Innovative energy efficient technologies ..... 11
12 Example of calculation ..... 11
13 Verification process ..... 13
14 Documents to be submitted ..... 13
15 Preliminary verification at the design stage ..... 14
16 Final verification at sea trial ..... 19
17 Verification of the EEDI in case of major conversion ..... 21
18 Appendix 1: Review and witness points ..... 22
19 Appendix 2: Sample of documents to be submitted to the verifier ..... 24
20 Appendix 3: Verifying the calibration of model test equipment ..... 38
21 Appendix 4: Review and witnessing of model test procedures ..... 44
22 Appendix 5: Sample Report "Preliminary Verification of EEDI" ..... 52

# Part I - Scope of the Industry Guidelines

## 1 SCOPE OF THE GUIDELINES

### 1.1 Objective

The objective of these Industry Guidelines for calculation and verification of the Energy Efficiency Design Index (EEDI), hereafter designated as "the Industry Guidelines", is to provide details and examples of calculation of attained EEDI and to support the method and role of the verifier in charge of conducting the survey and certification of EEDI in compliance with the two following IMO Guidelines:

- 2012 Guidelines on the method of calculation of EEDI for new ships, Res. MEPC.212(63) adopted on 2 March 2012, referred to as the "IMO Calculation Guidelines" in the present document
- 2012 Guidelines on survey and certification of EEDI, Res. MEPC.214(63) adopted on 2 March 2012, referred to as the "IMO Verification Guidelines" in the present document

In the event that the IMO Guidelines are amended, then pending amendment of these Industry Guidelines, they are to be implemented in compliance with the amended IMO Guidelines.

### 1.2 Application

These Guidelines apply to new ships as defined in Regulation 2.23 of MARPOL Annex VI of 400 gross tonnage and above. The calculation and verification of EEDI are to be performed for each:

1. new ship before ship delivery
2. new ship in service which has undergone a major conversion
3. new or existing ship which has undergone a major conversion that is so extensive that the ship is regarded by the Administration as a newly constructed ship

The Industry Guidelines shall not apply to ships which have diesel-electric propulsion, turbine propulsion or hybrid propulsion systems.

### 1.3 Limited scope of the first issue of Industry Guidelines

This issue of the Industry Guidelines only applies to the following types of ships:

- Bulk carriers
- Gas carriers
- Tankers
- Containerships
- General cargo ships
- Refrigerated cargo carriers
- Combination carriers

which are not fitted with innovative energy efficient technologies.

The first issue of this document doesn't consider the EEDI verification after a major conversion. Guidelines on this subject will be developed subsequent to IMO's adoption of an interpretation of the definition of major conversion.

# Part II - Explanatory notes on calculation of EEDI

## 2 INTRODUCTION

The attained Energy Efficiency Design Index (EEDI) is a measure of a ship's energy efficiency determined as follows:

$$EEDI = \frac{CO_2\ emission}{Transport\ work}$$

The $CO_2$ emission is computed from the fuel consumption taking into account the carbon content of the fuel. The fuel consumption is based on the power used for propulsion and auxiliary power measured at defined design conditions.

The transport work is estimated by the designed ship capacity multiplied by the ship's speed measured at the maximum summer load draught and at 75 per cent of the rated installed power.

## 3 EEDI FORMULA

The EEDI is provided by the following formula:

$$\frac{(\prod_{j=1}^{n} f_j).(\sum_{i=1}^{nME} P_{ME(i)}.C_{FME(i)}.SFC_{ME(i)}) + P_{AE}.C_{FAE}.SFC_{AE} + \{(\prod_{j=1}^{n} f_j).\sum_{i=1}^{nPTI} P_{PTI(i)} - \sum_{i=1}^{neff} f_{eff(i)}.P_{AEeff(i)}\}.C_{FAE}.SFC_{AE} - \sum_{i=1}^{neff} f_{eff(i)}.P_{eff(i)}.C_{FME}.SFC_{ME})}{f_i.f_c.Capacity.f_w.V_{ref}}$$

With the following Notes:

The global fi factor may also be written:
$f_i = (\prod_{i=1}^{m} f_i)$
where each individual $f_i$ factor is explained under section 9 of this document.

If part of the normal maximum sea load is provided by shaft generators, the term $P_{AE}.C_{FAE}.SFC_{AE}$ may be replaced by:
$(P_{AE} - 0.75 * \sum_{i=1}^{nPTO} P_{PTO(i)}).C_{FAE}.SFC_{AE} + 0.75 * \sum_{i=1}^{nPTO} P_{PTO(i)}.C_{FME(i)}.SFC_{ME(i)}$
with the condition $0.75 * \sum_{i=1}^{nPTO} P_{PTO(i)} \leq P_{AE}$

Where the total propulsion power is limited by verified technical means as indicated under section 6, the term $(\sum_{i=1}^{nME} P_{ME(i)}.C_{FME(i)}.SFC_{ME(i)} + \sum_{i=1}^{nPTI} P_{PTI(i)}.C_{FAE}.SFC_{AE})$ is to be replaced by 75 percent of the limited total propulsion power multiplied by the average weighted value of ($SFC_{ME}.C_{FME}$) and ($SFC_{AE}.C_{FAE}$)

Due to the uncertainties in the estimation of the different parameters, the accuracy of the calculation of the attained EEDI cannot be better than 1%.
Therefore, the values of attained and required EEDI have to be reported with no more than three significant figures (for instance, 2.23 or 10.3) and the checking of Regulation 20, chapter 4 of MARPOL Annex VI has to be verified in accordance with this accuracy.

## 4 FUEL CONSUMPTION AND $CO_2$ EMISSION

The conversion factor $C_F$ and the specific fuel consumption, SFC, are determined from the results recorded in the parent engine Technical File as defined in paragraph 1.3.15 of the NOx Technical Code 2008.

The fuel grade used during the test of the engine in the test bed measurement of SFC determines the value of the $C_F$ conversion factor according to the table under 2.1of the IMO Calculation Guidelines.

SFC is the corrected specific fuel consumption, measured in g/kWh, of the engines. The subscripts ME(i) and AE(i) refer to the main and auxiliary engine(s), respectively. $SFC_{AE}$ is the power-weighted average among $SFC_{AE(i)}$ of the respective engines *i*.

For main engines certified to the E2 or E3 test cycles of the NOx Technical Code 2008, the engine Specific Fuel Consumption ($SFC_{ME(i)}$) is that recorded in the test report included in a NOx Technical File for the parent engine(s) at 75% of MCR power.

For engines certified to the D2 or C1 test cycles of the NOx Technical Code 2008, the engine Specific Fuel Consumption ($SFC_{AE(i)}$) is that recorded in the test report included in a NOx Technical File for the parent engine(s) at 50% of MCR power or torque rating.

The SFC is to be corrected to the value corresponding to the ISO standard reference conditions using the standard lower calorific value of the fuel oil (42,700kJ/kg), referring to ISO 15550:2002 and ISO 3046-1:2002.

For LNG driven engines for which SFC is measured in kJ/kWh, the SFC value is to be converted to g/kWh using the standard lower calorific value of the LNG (48,000 kJ/kg), referring to the 2006 IPCC Guidelines.

For those engines which do not have a test report included in a NOx Technical File because its power is below 130 kW, the SFC specified by the manufacturer is to be used.

At the design stage, in case of unavailability of test reports in the NOx Technical File, the SFC value given by the manufacturer with the addition of the guarantee tolerance is to be used.

## 5 CAPACITY, POWER AND SPEED

### 5.1 Capacity

The capacity of the ship is computed as a function of the deadweight as indicated under 2.3 of the IMO Calculation Guidelines.
For the computation of the deadweight according to 2.4 of the IMO Calculation Guidelines, the lightweight of the ship and the displacement at the summer load draught are to be based on the results of the inclining test or lightweight check provided in the final stability booklet. At the design stage, the deadweight may be taken in the provisional documentation.

### 5.2 Power

The installed power for EEDI determination is taking into account the propulsion power and in general a fixed part of the auxiliary power, measured at the output of the main or auxiliary engine.
The total propulsion power is defined as 75% MCR of all main engines.

The total shaft propulsion power (power delivered to propellers $P_S$) is conventionally taken as follows:

$$\sum_{i=1}^{nME} P_{ME(i)} + \sum_{i=1}^{nPTI} (P_{PTI(i)} \cdot \eta_{PTI(i)}) \cdot \eta_{\overline{Gen}}$$

In this formula:

- The value of $P_{ME(i)}$ may be limited by verified technical means (see 6 below)
- The total shaft propulsion power may be limited by verified technical means. In particular an electronic engine control system may limit the total propulsion power, whatever the number of engines in function (see 6 below)

The auxiliary power can be nominally defined as a specified proportion of main engine power aiming to cover normal maximum sea load for propulsion and accommodation[1]. The nominal values are 2.5% of main engine power plus 250 kW for installed main engine power equal to or above 10 MW. 5% of $P_{ME}$ will be accounted if less than 10 MW main engine power is installed. Alternatively, as explained below, the value for auxiliary power can be taken from the power balance table for the ship.

In addition, if shaft motors are installed, then in principle 75% of the shaft motor power is accounted for in the EEDI calculation. Detailed explanation about this is given in section 6.

For a ship where the $P_{AE}$ value calculated by paragraph 2.5.6.1 or 2.5.6.2 of the IMO Calculation Guidelines is significantly different from the total power used at normal seagoing operations, as an option if the difference leads to a variation of the computed value of the EEDI exceeding 1%, the $P_{AE}$ value could be estimated by the electric power (excluding propulsion) in conditions when the ship is engaged in a voyage at reference speed ($V_{ref}$) as given in the electric power table (EPT), divided by the average efficiency of the generator(s) weighted by power.

### 5.3 Speed $V_{ref}$

The speed $V_{ref}$ is the ship speed, measured in knots, verified during sea trials and corrected to be given in the following conditions:

- in deep water
- assuming the weather is calm with no wind, no current and no waves
- in the loading condition corresponding to the Capacity
- at the total shaft propulsion power defined in 5.2 taking into account shaft generators and shaft motors

## 6 SHAFT GENERATOR AND SHAFT MOTOR

### 6.1 Introduction and background

Ships need electrical power for the operation of engine auxiliary systems, other systems, crew accommodation and for any cargo purposes. This electrical power can be generated by diesel-generator sets (gen-sets), shaft generators, waste heat recovery systems driving a generator and possibly by new innovative technologies, e.g. solar panels. Diesel-generator sets and shaft generators are the most common systems. While diesel-generator sets use a diesel engine powering a generator, a shaft generator is driven by the main engine. It is considered that due to the better efficiency of the main engine and efficiency of the shaft generator less $CO_2$ is emitted compared to gen-set operation.

The EEDI formula expresses the propulsion power of a vessel as 75% of the main engine power $P_{ME}$. It is also termed shaft power $P_S$, which corresponds to the ship's speed $V_{ref}$ in the EEDI formula.
$P_{AE}$ - the auxiliary power - is also included in the EEDI formula. However, this power demand is largely dependent on loading and trading patterns and it must also incorporate safety aspects, for example, the provision of a spare generator set. As noted in section 5, the auxiliary power can generally be taken into account as a fixed proportion of the main engine power (i.e. nominally 2.5% plus 250kW)[2].

The use of shaft generators is a well proven and often applied technology, particularly for high electrical power demands related to the payload e.g. reefer containers. Usually a ship design implements a main engine to reach the envisaged speed with some provision of sea margin. For the use of a shaft generator past practice and understanding was to install a

[1] by paragraph 2.5.6.1 or 2.5.6.2 of the IMO Calculation Guidelines

[2] c.f.: precise instruction in IMO Calculation Guidelines

bigger main engine to reach the same speed compared to the design without a shaft generator and to then have the excess power available from the main engine at any time for generation of electrical power. As a rule of thumb, one more cylinder was added to the main engine to cover this additional power demand.
The difficulty with this issue for calculation of the EEDI is that the excess power could be used to move the ship faster in the case where the shaft generator is not in use which would produce a distortion between ship designs which are otherwise the same.

The IMO Calculation Guidelines take these circumstances into account and offer options for the use of shaft generators. These options are described in detail, below.

Further, electric shaft motors operate similarly to shaft generators; sometimes a shaft generator can act as a shaft motor. The possible influence of shaft motors has also been taken into account in the IMO Calculation Guidelines and is also illustrated, below.

### 6.2 Main engine power without shaft generators

The main engines are solely used for the ship's propulsion. For the purpose of the EEDI, the main engine power is 75 % of the rated installed power $MCR_{ME}$ for each main engine:

$$P_{ME(i)} = 0.75 \times MCR_{ME(i)}$$

### 6.3 Main engine power with shaft generators

Shaft generators produce electric power using power from the prime mover (main engine). Therefore the power used for the shaft generator is not available for the propulsion. Hence $MCR_{ME}$ is the sum of the power needed for propulsion and the power needed for the shaft generator. Thus at least a part of the shaft generator's power should be deductible from the main engine power ($P_{ME}$).
The power driving the shaft generator is not only deducted in the calculation. As this power is not available for propulsion this yields a reduced reference speed. The speed is to be determined from the power curve obtained at the sea trial as explained in the schematic figure provided in paragraph 2.5 of the IMO Calculation Guidelines.

It has been defined that 75% of the main engine power is entered in the EEDI calculation. To induce no confusion in the calculation framework, it has therefore also been defined to take into account 75% of the shaft power take off / take in (as electrical power [kW] as displayed on the name plate of the shaft generator/motor).

For the calculation of the effect of shaft generators, two options are available.

#### 6.3.1 Option 1

For this option, $P_{PTO(i)}$ is defined as 75% of the rated electrical output power $MCR_{PTO}$ of each shaft generator. The maximum allowable deduction is limited by the auxiliary power $P_{AE}$ as described in Paragraph 2.6 in the IMO Calculation Guidelines.
Then the main engine power $P_{ME}$ is:

$$P_{PTO(i)} = 0.75 \times MCR_{PTO(i)}$$

$$\sum P_{ME(i)} = 0.75 \times \sum \left( MCR_{ME(i)} - P_{PTO(i)} \right) \quad with \quad 0.75 \times \sum P_{PTO(i)} \leq P_{AE}$$

This means, that only the maximum amount of shaft generator power that is equal to $P_{AE}$ is deductible from the main engine power. In doing so, 75% of the shaft generator power must be greater than the auxiliary power calculated in accordance to Para. 2.6. of the IMO Calculation Guidelines.
Higher shaft generators output than $P_{AE}$ will not be accounted for under option 1.

### 6.3.2 Option 2

The main engine power $P_{ME}$ to be considered for the calculation of the EEDI is defined as 75% of the power to which the propulsion system is limited. This can be achieved by any verified technical means, e.g. by electronic engine controls.

$$P_{ME(i)} = 0.75 \times P_{Shaft,limit}$$

This option is to cover designs with the need for very high power requirements (e.g., pertaining to the cargo). With this option it is ensured that the higher main engine power cannot be used for a higher ship speed. This can be safeguarded by the use of verified technical devices limiting the power to the propulsor.

For example, consider a ship having a 15 MW main engine with a 3 MW shaft generator. The shaft limit is verified to 12 MW. The EEDI is then calculated with only 75% of 12 MW as main engine power as, in any case of operation, no more power than 12 MW can be delivered to the propulsor, irrespective of whether a shaft generator is in use or not.

It is to be noted that the guidelines do not stipulate any limits as to the value of the shaft limit in relation to main engine power or shaft generator power.

### 6.3.3 The use of specific fuel oil consumption and $C_F$-factor

Shaft generators are driven by the main engine, therefore the specific fuel oil consumption of the main engine is allowed to be used to the full extent if 75% of the shaft generator power is equal to $P_{AE}$.
In the case shaft generator power is less than $P_{AE}$ then 75% of the shaft generator power is calculated with the main engine's specific fuel oil consumption and the remaining part of the total $P_{AE}$ power is calculated with SFC of the auxiliaries ($SFC_{AE}$).

The same applies to the conversion factor $C_F$, if different fuels are used in the EEDI calculation.

### 6.4 Total shaft power with shaft motors

In the case where shaft motor(s) are installed, the same guiding principles as explained for shaft generators, above, apply. But in contrast to shaft generators, motors do increase the total power to the propulsor and do increase ships' speed and therefore must be included in the total shaft power within the EEDI calculation. The total shaft power is thus main engine(s) power plus the additional shaft motor(s) power:

$$\Sigma P_{ME(i)} + \Sigma P_{PTI(i),Shaft}$$

Where:

$$\sum P_{PTI(i),Shaft} = \sum \left(0.75 \cdot P_{SM,\max(i)} \cdot \eta_{PTI(i)}\right)$$

Similar to the shaft generators, only 75% of the rated power consumption $P_{SM,max}$ (i.e. rated motor output divided by the motor efficiency) of each shaft motor divided by the weighted average efficiency of the generator(s) $\eta_{\overline{Gen}}$ is taken into account for EEDI calculation.[3]

[3] The efficiency of shaft generators in the previous section has consciously not been taken into account in the denominator as inefficient generator(s) would increase the deductible power.

$$\sum P_{PTI(i)} = \frac{\sum\left(0.75 \cdot P_{SM,\max(i)}\right)}{\eta_{Gen}}$$

A power limitation similar to that described above for shaft generators can also be used for shaft motors. So if a verified technical measure is in place to limit the propulsion output, only 75% of limited power is to be used for EEDI calculation and also for that limited power $V_{ref}$ is determined.

A diagram is inserted to highlight where the mechanical and electrical efficiencies or the related devices ( PTI and Generator's) are located:

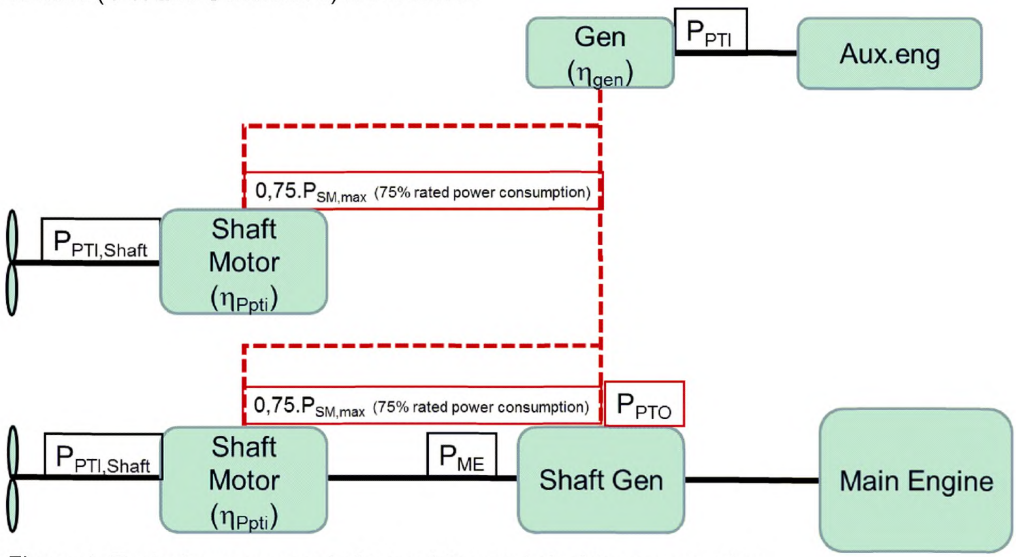


*Figure 1: Typical arrangement of propulsion and electric power system*

### 6.5 Calculation examples

For these calculation examples the ships' following main parameters are set as:

$MCR_{ME}$ = 20,000 kW
*Capacity* = 20,000 DWT
$C_{F,ME}$ = 3.206
$C_{F,AE}$ = 3.206
$SFC_{ME}$ = 190 g/kWh
$SFC_{AE}$ = 215 g/kWh
$v_{ref}$ = 20 kn (without shaft generator/motor)

#### 6.5.1 One main engine, no shaft generator

$$MCR_{ME} = 20{,}000kW$$
$$P_{ME} = 0.75 \times MCR_{ME} = 0.75 \times 20{,}000kW = 15{,}000kW$$
$$P_{AE} = \left(0.025 \times 20{,}000\right) + 250kW = 750kW$$

$$EEDI = \left(\left(15{,}000 \times 3.206 \times 190\right) + \left(750 \times 3.206 \times 215\right)\right)/\left(20 \times 20{,}000\right)$$
$$= 24.1\ gCO_2/tnm$$

### 6.5.2 One main engine, 0.75 x $P_{PTO}$<$P_{AE}$, option 1

$$
\begin{aligned}
MCR_{PTO} &= 500kW \\
P_{PTO} &= 500kW \times 0.75 = 375kW \\
MCR_{ME} &= 20{,}000kW \\
P_{ME} &= 0.75 \times (MCR_{ME} - P_{PTO}) = 0.75 \times (20{,}000kW - 375kW) = 14{,}719kW \\
P_{AE} &= (0.025 \times MCR_{ME}) + 250kW = 750kW \\
v_{ref} &= 19.89kn: \quad \text{The speed at } P_{ME} \text{ determined from the power curve} \\
EEDI &= ((P_{ME} \times C_{F,ME} \times SCF_{ME}) + (0.75 \times P_{PTO} \times C_{F,ME} \times SCF_{ME}) + ((P_{AE} - 0.75 \times P_{PTO}) \times C_{F,AE} \times SFC_{AE}))/(DWT \times v_{ref}) \\
&= 23.8\ g\,CO_2/t\,nm \quad \approx 1\%
\end{aligned}
$$

### 6.5.3 One main engine, 0.75 x $P_{PTO}$=$P_{AE}$, option 1

$$
\begin{aligned}
MCR_{PTO} &= 1{,}333kW \\
P_{PTO} &= 1{,}333kW \times 0.75 = 1{,}000kW \\
MCR_{ME} &= 20{,}000kW \\
P_{ME} &= 0.75 \times (MCR_{ME} - P_{PTO}) = 0.75 \times (20{,}000kW - 1{,}000kW) = 14{,}250kW \\
P_{AE} &= (0.025 \times MCR_{ME}) + 250kW = 750kW \\
v_{ref} &= 19.71kn: \quad \text{The speed at } P_{ME} \text{ determined from the power curve} \\
EEDI &= ((P_{ME} \times C_{F,ME} \times SCF_{ME}) + (0.75 \times P_{PTO} \times C_{F,ME} \times SCF_{ME}))/(DWT \times v_{ref}) \\
&= 23.2\ g\,CO_2/t\,nm \quad \approx 4\%
\end{aligned}
$$

### 6.5.4 One main engine with shaft generator, 0.75 x $P_{PTO}$> $P_{AE}$, option 1

$$
\begin{aligned}
MCR_{PTO} &= 2{,}000kW \\
0.75 \times P_{PTO} &= 0.75 \times 2{,}000kW \times 0.75 = 1{,}125kW > P_{AE} \Rightarrow P_{PTO} = P_{AE}/0.75 = 1{,}000kW \\
MCR_{ME} &= 20{,}000kW \\
P_{ME} &= 0.75 \times (MCR_{ME} - P_{PTO}) = 0.75 \times (20{,}000kW - 1{,}000kW) = 14{,}250kW \\
P_{AE} &= (0.025 \times MCR_{ME}) + 250kW = 750kW \\
v_{ref} &= 19.71kn: \quad \text{The speed at } P_{ME} \text{ determined from the power curve} \\
EEDI &= ((P_{ME} \times C_{F,ME} \times SCF_{ME}) + (0.75 \times P_{PTO} \times C_{F,ME} \times SCF_{ME}))/(DWT \times v_{ref}) \\
&= 23.2\ g\,CO_2/t\,nm \quad \approx 4\%
\end{aligned}
$$

### 6.5.5 One main engine with shaft generator, 0.75 x $P_{PTO}$> $P_{AE}$, option 2

$$
\begin{aligned}
MCR_{PTO} &= 2{,}000kW \\
MCR_{ME} &= 20{,}000kW \\
P_{Shaft,limit} &= 18{,}000kW \\
P_{ME} &= 0.75 \times (P_{Shaft,limit}) = 0.75 \times (18{,}000kW) = 13{,}500kW \\
P_{AE} &= (0.025 \times MCR_{ME}) + 250kW = 750kW \\
v_{ref} &= 19.41kn: \quad \text{The speed at } P_{ME} \text{ determined from the power curve} \\
EEDI &= ((P_{ME} \times C_{F,ME} \times SFC_{ME}) + (P_{AE} \times C_{F,ME} \times SFC_{ME}))/(DWT \times v_{ref}) \\
&= 22.4\ g\,CO_2/t\,nm \quad \approx 7\%
\end{aligned}
$$

### 6.5.6 One main engine, one shaft motor

$$MCR_{ME} = 18{,}000kW$$
$$P_{ME} = 0.75 \times MCR_{ME} = 0.75 \times 18{,}000kW = 13{,}500kW$$
$$P_{AE} = \left\{0.025 \times \left(MCR_{ME} + \frac{P_{PTI}}{0.75}\right)\right\} + 250kW = \left\{0.025 \times \left(18{,}000 + \frac{1612.9}{0.75}\right)\right\} + 250kW = 754kW$$
$$P_{SM,max} = 2{,}000kW$$
$$P_{PTI} = 0.75 \times P_{SM,max} / \eta_{\overline{Gen}} = 1{,}612.9kW$$
$$\eta_{PTI} = 0.97$$
$$\eta_{\overline{Gen}} = 0.93$$
$$P_{Shaft} = P_{ME} + P_{PTI,Shaft} = P_{ME} + (P_{PTI} \cdot \eta_{PTI}) \cdot \eta_{\overline{Gen}} = 13{,}500kW + (1612.9 \cdot 0.97) \cdot 0.93 = 14{,}955kW$$
$$v_{ref} = 20kn$$

$$EEDI = \left(\left(P_{ME} \times C_{F,ME} \times SFC_{ME}\right) + \left(P_{AE} \times C_{F,AE} \times SFC_{AE}\right) + \left(P_{PTI} \times C_{F,AE} \times SFC_{AE}\right)\right) / \left(DWT \times v_{ref}\right)$$
$$= 24.6\ gCO_2/tnm \quad \approx -2\%$$

## 7 WEATHER FACTOR $f_w$

$f_w$ is a non-dimensional coefficient indicating the decrease of speed in representative sea conditions of wave height, wave frequency and wind speed (e.g. Beaufort Scale 6), and is taken as 1.0 for the calculation of attained EEDI.

When a calculated $f_w$ is used, the attained EEDI using calculated $f_w$ is to be presented as "attained $EEDI_{weather}$" in order to clearly distinguish it from the attained EEDI under regulations 20 and 21 in MARPOL Annex VI.
Guidelines for the calculation of the coefficient $f_w$ for the decrease of ship speed in respective sea conditions will be developed.

## 8 CORRECTION FACTOR FOR SHIP SPECIFIC DESIGN ELEMENTS $f_j$

Except in the cases listed below, the value of the $f_j$ factor is 1.0.

For Finnish-Swedish ice class notations or equivalent notations of the Classification Societies, the $f_j$ correction factor is indicated in Table 1 under 2.8.1 of the IMO Calculation Guidelines.[4]

For shuttle tankers with propulsion redundancy defined as oil tankers between 80,000 and 160,000 deadweight equipped with dual-engines and twin-propellers and assigned the class notations covering dynamic positioning and propulsion redundancy, the $f_j$ factor is to be 0.77.

The total shaft propulsion power of shuttle tankers with redundancy is usually not limited by verified technical means.

## 9 CAPACITY FACTOR $f_i$

Except in the cases listed below, the value of the $f_i$ factor is 1.0.

For Finnish-Swedish ice class notations or equivalent notations of the Classification Societies, the $f_i$ correction factor is indicated in Table 2 under 2.11.1 of the IMO Calculation Guidelines.[4]

[4] Tables 1 and 2 in IMO Calculation Guidelines refer to Finnish/Swedish ice classed ships usually trading in the Baltic Sea. Justified alternative values for $f_i$ and $f_j$ factors may be accepted for ice-classed ships outside this scope of application (e.g. very large ships or POLAR CLASS)

For a ship with voluntary structural enhancement, the $f_{iVSE}$ factor is to be computed according to 2.11.2 of the IMO Calculation Guidelines.

For bulk carriers and oil tankers built in accordance with the Common Structural Rules and assigned the class notation CSR, the $f_{iCSR}$ factor is to be computed according to 2.11.3 of the IMO Calculation Guidelines.

$f_i$ capacity factors can be cumulated (multiplied), but the reference design for calculation of $f_{iVSE}$ is to comply with the ice notation and/or Common Structural Rules as the case may be.

## 10 CUBIC CAPACITY CORRECTION FACTOR fc

Except in the cases listed below, the value of the fc factor is 1.0.

For chemical tankers as defined in regulation 1.16.1 of MARPOL Annex II, the $f_c$ factor is to be computed according to 2.12.1 of the IMO Calculation Guidelines.

For gas carriers as defined in regulation 1.1 of IGC Code having direct diesel driven propulsion, the $f_c$ factor is to be computed according to 2.12.2 of the IMO Calculation Guidelines.

## 11 INNOVATIVE ENERGY EFFICIENT TECHNOLOGIES

Innovative energy efficient technologies are not taken into account in the first version of this document (see 1.3)

## 12 EXAMPLE OF CALCULATION

### 12.1 List of input parameters for calculation of EEDI

The input parameters used in the calculation of the EEDI are provided in Table 1.

The values of all these parameters are to be indicated in the EEDI Technical File and the documents listed in the "source" columnare to be submitted to the verifier.

| Symbol | Name | Usage | Source | Scope |
|---|---|---|---|---|
| | Service notation | Capacity, $f_i$, $f_j$ and $f_c$ factors | | For the ship |
| | Class notations | fj for shuttle tanker, $f_{iCSR}$ | Classification file | |
| | Ice notation | fi, fj for ice class | | |
| Lpp | Length between perpendiculars (m) | fi, fj for ice class | | |
| Δ | Displacement @ summer load draught (t) | deadweight | final stability file | |
| LWT | Ligthweight (t) | deadweight, $f_{iVSE}$, $f_{iCSR}$, fc | Sheets of Submitter calculation for $lightweight_{referencedesign}$ lightweight check report | |
| $P_{AE}$ | Auxiliary engine power (kW) | EEDI | Note: Computed from engines & PTIs powers or electric power table | |
| $V_{ref}$ | Reference speed (knot) | EEDI | Sea trial report | |
| Cube | Total cubic capacity of the cargo tanks (m3) | $f_c$ for chemical tankers and gas carriers | Tonnage file | |
| MCR | Rated installed power (kW) | power | EIAPP certificate or nameplate (if less than 130 kW) | Per engine ( nME + nGEN) |
| $MCR_{lim}$ | Limited rated output power after PTO in (kW) | $P_{ME}$ with PTO option 2 | Verification file | |

| Symbol | Name | Usage | Source | Scope |
|---|---|---|---|---|
| | Fuel grade | $C_F$, SFC | NOX Technical File of the parent engine | |
| SFC | Corrected specific fuel consumption (g/kWh) | EEDI | NOx Technical File of the parent engine | |
| $MCR_{PTO}$ | Rated electrical output power (kW) | $P_{ME}$ | | Per shaft generator (nPTO) |
| $P_{SM,max}$ | Rated power consumption (kW) | EEDI | | Per shaft motor (nPTI) |
| $\eta_{PTI}$ | efficiency | power | | |
| $\eta_{GEN}$ | efficiency | power | | Per generator (nGEN) |
| $P_{SHAFTlim}$ | Limited shaft propulsion power (kW) | Limited power where means of limitation are fitted | Verification file | Per shaftline (nSHAFT) |

*Table 1: input parameters for calculation of EEDI*

## 12.2 Sample calculation of EEDI

A sample calculation of EEDI is provided in Appendix 2.

# Part III - Verification of EEDI

## 13 VERIFICATION PROCESS

Attained EEDI is to be computed in accordance with the IMO Calculation Guidelines and Part II of the present Industry Guidelines. Survey and certification of the EEDI are to be conducted on two stages:

1. preliminary verification at the design stage
2. final verification at the sea trial

The flow of the survey and certification process is presented in Figure 2.

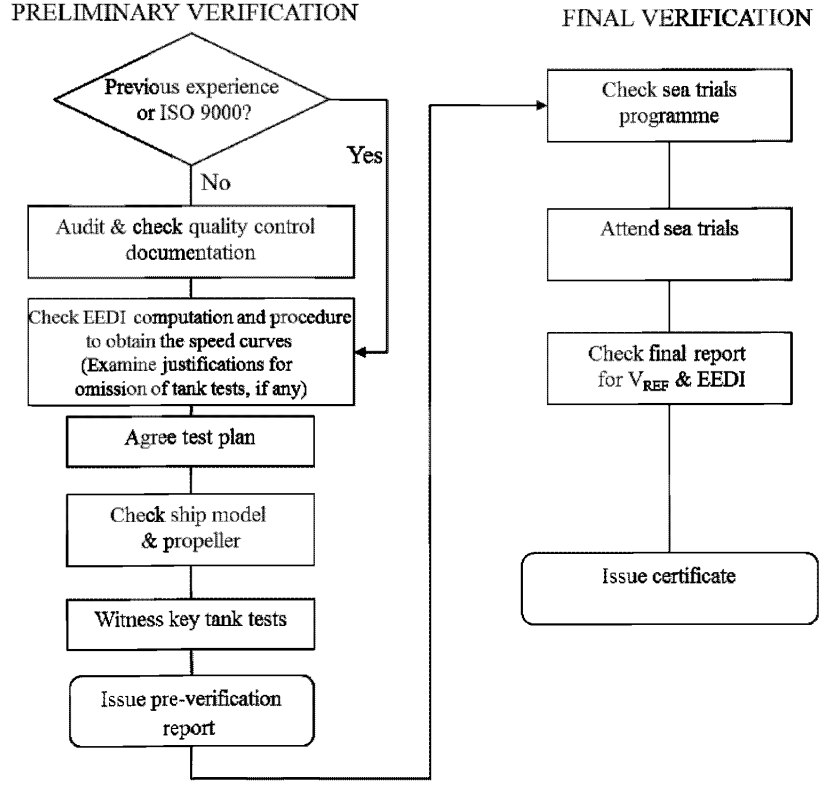


*Figure 2: Flow of survey and certification process by verifier*

## 14 DOCUMENTS TO BE SUBMITTED

A sample of document to be submitted to the verifier including additional information for verification is provided in Appendix 2.

The following information is to be submitted by the submitter to the verifier at the design stage:

| | |
|---|---|
| EEDI Technical File | EEDI Technical File as defined in the IMO Verification Guidelines. See example of the EEDI Technical File in Appendix 1 of IMO Verification Guidelines. |
| NOx Technical File | Copy of the NOx Technical File and documented summary of the SFC correction for each type of main and auxiliary engine with copy of EIAPP certificate.<br>Note: if the NOx Technical File has not been approved at the time of the preliminary verification, the SFC value with the addition of the guarantee tolerance is to be provided by Manufacturer. In this case, the NOx Technical File is to be submitted at the final verification stage. |

| | |
|---|---|
| Electric Power Table | If $P_{AE}$ is significantly different from the values computed using the formula in 2.5.6.1 or 2.5.6.2 of the IMO Calculation Guidelines |
| Ship lines and model particulars | - Lines of ship<br>- Report including the particulars of the ship model and propeller model |
| Verification file of power limitation technical arrangement | If the propulsion power is voluntarily limited by verified technical means |
| Power curves | Power-speed curves predicted at full scale in sea trial condition and EEDI condition |
| Description of the towing tank test facility and towing tank test organisation quality manual | If the verifier has no recent experience with the towing tank test facility and the towing tank test organization quality system is not ISO 9001 certified.<br>- Quality management system of the towing tank test including process control, justifications concerning repeatability and quality management processes<br>- Records of measuring equipment calibration as described in Appendix 3<br>- Standard model-ship extrapolation and correlation method (applied method and tests description) |
| Gas fuel oil general arrangement plan | If gas fuel is used as the primary fuel of the ship fitted with dual fuel engines. Gas fuel storage tanks (with capacities) and bunkering facilities are to be described. |
| Towing Tank Tests Plan | Plan explaining the different steps of the towing tank tests and the scheduled inspections allowing the verifier to check compliance with the items listed in Appendix 1 concerning tank tests |
| Towing Tank Tests Report | - Report of the results of the towing tank tests at sea trial and EEDI condition as required in Appendix 4<br>- Values of the experience-based parameters defined in the standard model-ship correlation method used by the towing tank test organization/shipyard<br>- Reasons for exempting a towing tank test, only if applicable<br>- Numerical calculations report and validation file of these calculations, only if calculations are used to derive power curves |
| Ship reference speed $V_{ref}$ | Detailed calculation process of the ship speed, which is to include the estimation basis of experience-based parameters such as roughness coefficient, wake scaling coefficient |

*Table 2: documents to be submitted at the design stage*

The following information is to be submitted by the submitter to the verifier at the final verification stage (and before the sea trials for the programme of sea trials):

| | |
|---|---|
| Programme of sea trials | Description of the test procedure to be used for the speed trial, with number of speed points to be measured and indication of PTO/PTI to be in operation, if any. |
| Sea trials report | Report of sea trials with detailed computation of the corrections allowing determination of the reference speed $V_{ref}$ |
| Final stability file | Final stability file including lightweight of the ship and displacement table based on the results of the inclining test or the lightweight check |
| Final power curves | Final power curve in the EEDI condition showing the speed adjustment methodology |
| Revised EEDI Technical File | Including identification of the parameters differing from the calculation performed at the initial verification stage |
| Ship lines | Lines of actual ship |

*Table 3: documents to be submitted at the final verification stage*

In line with the IMO Verification Guidelines (4.1.2), it is recognized that the documents listed above may contain confidential information of submitters, which requires Intellectual Property Rights (IPR) protection. In the case where the submitter wants a non-disclosure agreement with the verifier, the additional information is to be provided to the verifier upon mutually agreed terms and conditions.

## 15 PRELIMINARY VERIFICATION AT THE DESIGN STAGE

### 15.1 Scope of the verifier work

For the preliminary verification of the EEDI at the design stage, the verifier:

- Review the EEDI Technical File, check that all the input parameters (see 12.1 above) are documented and justified and check that the possible omission of a towing tank test has been properly justified
- Check that the ITTC procedures and quality system are implemented by the organization conducting the towing tank tests. The verifier should possibly audit the quality management system of the towing tank if previous experience is insufficiently demonstrated
- Witness the towing tank tests according to a test plan initially agreed between the submitter and the verifier
- Check that the work done by the towing tank test organisation is consistent with the present Guidelines. In particular, the verifier will check that the power curves at full scale are determined in a consistent way between sea trials and EEDI loading conditions, applying the same calculation process of the power curves and considering justifiable differences of experience based parameters between the two conditions
- Issue a pre-verification report

**15.2 Definitions**

*Experience-based parameters* means parameters used in the determination of the scale effects coefficients of correlation between the towing tank model scale results and the full scale predictions of power curves.
This may include:

1. Hull roughness correction
2. Wake correction factor
3. Air resistance correction factor (due to superstructures and deck load)
4. Appendages correction factor (for appendages not present at model scale)
5. Propeller cavitation correction factor
6. Propeller open-water characteristics correction
7. $C_P$ and $C_N$ (see below)
8. $\Delta C_{FC}$ and $\Delta w_C$ (see below)

*Ship of the same type* means a ship of which hull form (expressed in the lines such as sheer plan and body plan) excluding additional hull features such as fins and of which principal particulars are identical to that of the base ship.

Definition of survey methods directly involving the verifier: Review and Witness.
*Review* means the act of examining documents in order to determine identification and traceability and to confirm that requested information are present and that EEDI calculation process conforms to relevant requirements.

*Witness* means the attendance at scheduled key steps of the towing tank tests in accordance with the agreed Test Plan to the extent necessary to check compliance with the survey and certification requirements.

**15.3 Towing tank tests and numerical calculations**
There are two loading conditions to be taken into account for EEDI: EEDI loading condition and sea trial condition.
The speed power curves for these two loading conditions are to be based on towing tank test measurements. Towing tank test means model towing tests, model self-propulsion tests and model propeller open water tests.
Numerical calculations may be accepted as equivalent to model propeller open water tests.

A towing tank test for an individual ship may be omitted based on technical justifications such as availability of the results of towing tank tests for ships of the same type according to 4.2.5 of the IMO Verification Guidelines.

Numerical calculations may be submitted to justify derivation of speed power curves, where only one parent hull form have been verified with towing tank tests, in order to evaluate the effect of additional hull features such as fore bulb variations, fins and hydrodynamic energy saving devices.
These numerical tests may include CFD calculation of propulsive efficiency at reference speed $V_{ref}$ as well as hull resistance variations and propeller open water efficiency.
In order to be accepted, these numerical tests are to be carried out in accordance with defined quality and technical standards (ITTC 7.5-03-01-04 at its latest revision or equivalent). The comparison of the CFD-computed values of the unmodified parent hull form with the results of the towing tank tests must be submitted for review.

**15.4 Qualification of verifier personnel**
Surveyors of the verifier are to confirm through review and witness as defined in 15.2 that the calculation of EEDI is performed according to the relevant requirements listed in 1.1. The surveyors are to be qualified to be able to carry out these tasks and procedures are to be in place to ensure that their activities are monitored.

**15.5 Review of the towing tank test organisation quality system**
The verifier is to familiarize with the towing tank test organization test facilities, measuring equipment and quality system for consideration of complying with the requirements of 15.6 prior to the test attendance when the verifier has no recent experience of the towing tank test facilities and the towing tank test organization quality control system is not certified according to a recognized scheme (ISO 9001 or equivalent).

In this case, the following additional information relative to the towing tank test organization is to be submitted to the verifier:

1. descriptions of the towing tank test facility; this includes the name of the facility, the particulars of towing tanks and towing equipment, and the records of calibration of each monitoring equipment as described in Appendix 3
2. quality manual containing at least the information listed in the ITTC Sample quality manual (2002 issue) Records of measuring equipment calibration as described in Appendix 3
3. standard model-ship extrapolation and correlation method (applied method and tests description)

**15.6 Review and Witness**
The verifier is to review the EEDI Technical File, using also the other documents listed in table 2 and submitted for information in order to verify the calculation of EEDI at design stage. This review activity is described in Appendix 1. Since detailed process of the towing tank tests depends on the practice of each submitter, sufficient information is to be included in the document submitted to the verifier to show that the principal scheme of the towing tank test process meets the requirements of the reference documents listed in Appendix 1 and Appendix 4.

Prior to the start of the towing tank tests, the submitter is to submit a test plan to the verifier. The verifier reviews the test plan and agrees with the submitter which scheduled inspections will be performed with the verifier surveyor in attendance in order to perform the verifications listed in Appendix 1 concerning the towing tank tests.

Following the indications of the agreed test plan, the submitter will notify the verifier for the agreed tests to be witnessed. The submitter will advise the verifier of any changes to the

activities agreed in the Test Plan and provide the submitter with the towing tank test report and results of trial speed prediction.

### 15.7 Model-ship correlation

Model-ship correlation method followed by the towing tank test organization or shipyard is to be properly documented with reference to the 1978 ITTC Trial prediction method given in ITTC Recommended Procedure 7.5-02-03-1.4 rev.02 of 2011 or subsequent revision, mentioning the differences between the followed method and the 1978 ITTC trial prediction method and their global equivalence.
Considering the formula giving the total full scale resistance coefficient of the ship with bilge keels and other appendages:

$$C_{TS} = \frac{S_S + S_{BK}}{S_S}.[(1+k).C_{FS} + \Delta C_F + C_A] + C_R + C_{AAS} + C_{AppS}$$

The way of calculating the form factor k, the roughness allowance $\Delta C_F$, the correlation allowance $C_A$, the air resistance coefficient $C_{AAS}$ and the appendages coefficient $C_{AppS}$ are to be documented (if they are taken as 0, this has to be indicated also), as indicated in Appendix 4.

The correlation method used is to be based on thrust identity and the correlation factors is to be according to method 1 ( $C_P - C_N$) or method 2 ($\Delta C_{FC}$ - $\Delta w_C$) of the 1978 ITTC Trial prediction method. If the standard method used by the towing tank test organization doesn't fulfil these conditions, an additional analysis based on thrust identity is to be submitted to the verifier.
The verifier will check that the power-speed curves obtained for the EEDI condition and sea trial condition are obtained using the same calculation process and properly documented as requested in Appendix 4 "Witnessing of model test procedures". In particular, the verifier will compare the differences between experience based coefficients Cp and $\Delta C_{FC}$ between the EEDI condition ($\nabla_{full}$) and sea trial condition if different from EEDI condition ($\nabla$) with the indications given in Figures 3.1 and 3.2 extracted from a SAJ-ITTC study on a large number of oil tankers. If the difference is significantly higher than the values reported in the Figures, a proper justification of the values is to be submitted to the verifier.

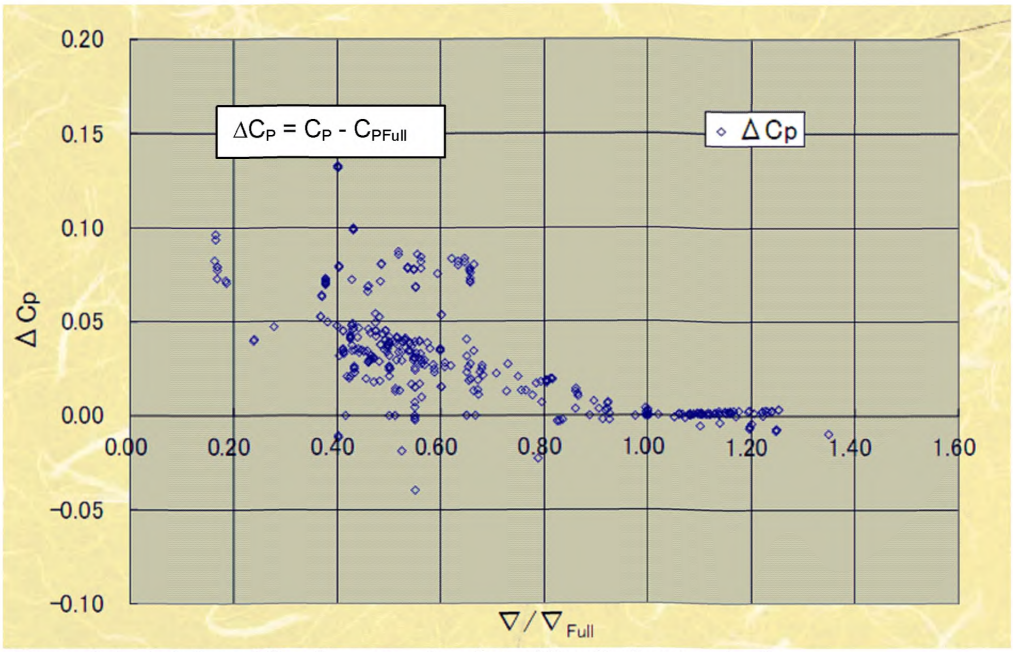


*Figure 3.1: Variation of $C_P$- $C_{PFull}$ as a function of the displacement ratio*

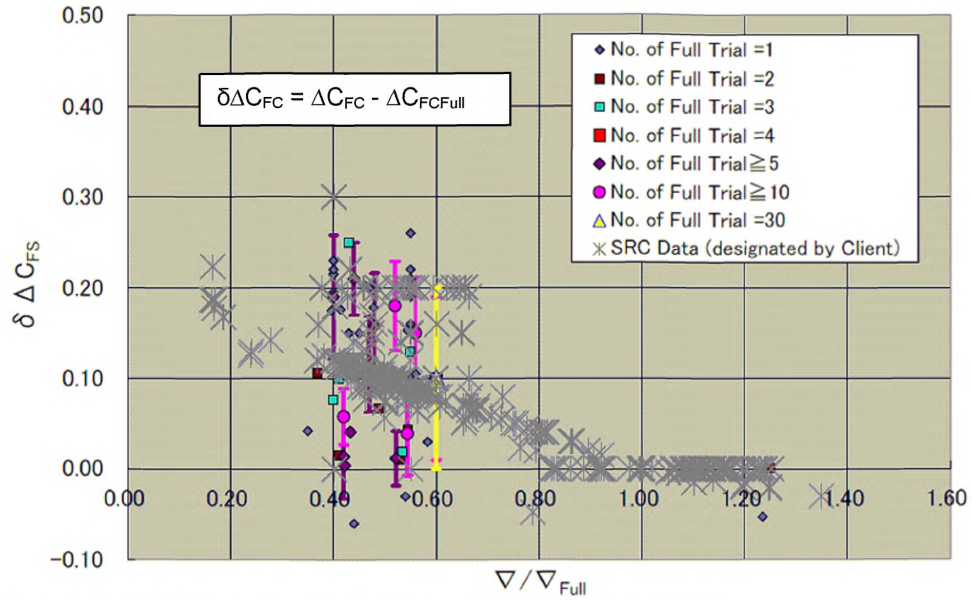


*Figure 3.2: Variation of $\Delta C_{FC}$ as a function of the displacement ratio*

### 15.8 Pre-verification report

The verifier issues the report on the "Preliminary Verification of EEDI" after it has verified the attained EEDI at the design stage in accordance with paragraphs 4.1 and 4.2 of the IMO Verification Guidelines.

A sample of the report on the “Preliminary Verification of EEDI” is provided in Appendix 5.

## 16 FINAL VERIFICATION AT SEA TRIAL

### 16.1 Sea trial procedure

For the verification of the EEDI at sea trial stage, the verifier shall:

- Examine the programme of the sea trial to check that the test procedure and in particular that the number of speed measurement points comply with the requirements of the IMO Verification Guidelines.
- Perform a survey to ascertain the machinery characteristics of some important electric load consumers and producers included in the EPT, if the power $P_{AE}$ is directly computed from the EPT data's.
- Attend the sea trial and notes the main parameters to be used for the final calculation of the EEDI, as given under 4.3.3 of the IMO Verification Guidelines
- Review the sea trial report provided by the submitter and check that the measured power and speed have been corrected according to ITTC Recommended Procedure 7.5-04-01-01.2 or the equivalent (see note).
- Check that the power curve estimated for EEDI condition further to sea trial is obtained by power adjustment.
- Review the revised EEDI Technical File.
- Issue or endorse the International Energy Efficiency Certificate

Note: For application of the present Guidelines the following procedures are considered wholly or partly (according to their scope) equivalent to ITTC Recommended Procedure 7.5-04-01-01.2 :

1. ISO 15016:2002
2. BSRA Standard method of speed trials analysis – BSRA report 486 / 1976

Table 5 lists the data which are to be measured and recorded during sea trials:

| Symbol | Name | Measurement | Remark |
|---|---|---|---|
| | Time and duration of sea trial | | |
| | Draft marks readings | | |
| | Air and sea temperature | | |
| | Main engine setting | Machinery log | |
| $\Psi_0$ | Course direction (rad) | Compass | |
| $V_G$ | Speed over ground (m/s) | GPS | |
| n | Propeller rpm (rpm) | Tachometer | |
| $P_S$ | Power measured (kW) | Torsion meter or strain gauges (for torque measurement) or any alternative method that offer an equivalent level of precision and accuracy of power measurement | |
| $V_{WR}$ | Relative wind velocity (m/s) | Wind indicator | |
| $\Psi_{WR}$ | Relative wind direction (rad) | See above | |
| $T_m$ | Mean wave period (seas and swell) (s) | Visual observation by multiple observers supplemented by hindcast data or wave measuring devices (wave buoy, wave radar, etc.) | |
| $H_{1/3}$ | Significant wave height (seas and swell) (m) | See above | |
| $\chi$ | Incident angle of waves ( seas and swell) (rad) | See above | |
| $\delta_R$ | Rudder angle (rad) | Rudder | |
| $\beta$ | Drift angle (rad) | GPS | |

*Table 5: Measured data during sea trials*

Prior to the sea trial, the programme of the sea trials and , if available, additional documents listed in table 3 are to be submitted to the verifier in order for the verifier to check the procedure and to attend the sea trial and perform the verifications included in Appendix 1 concerning the sea trial.

The ship speed is to be measured at sea trial for at least three points of which range includes the total propulsion power defined in 5.2 according to the requirements of the IMO Verification Guidelines 4.3.6. This requirement applies individually to each ship, even if the ship is a sistership of a parent vessel.

### 16.2 Estimation of the EEDI reference speed $V_{Ref}$

The adjustment procedure is applicable to the most complex case where sea trials cannot be conducted in EEDI loading condition. It is expected that this will be usually the case for cargo ships like bulk carriers for instance.

The adjustment procedure uses the graphical construction described in Figure 4 that can be described by the following general procedure, applied only to EEDI functioning point (75% of MCR):

Compute for each corrected power value measured during sea trial the ratio $P_{measured}$ / $P_{tanktestpredicted}$. These ratios are put on the curve obtained from the model tests in EEDI condition to obtain the curve of the trial results for EEDI condition.

Reference is made to paragraph 3 of Appendix 2 (Figure 3.1) where an example is provided.

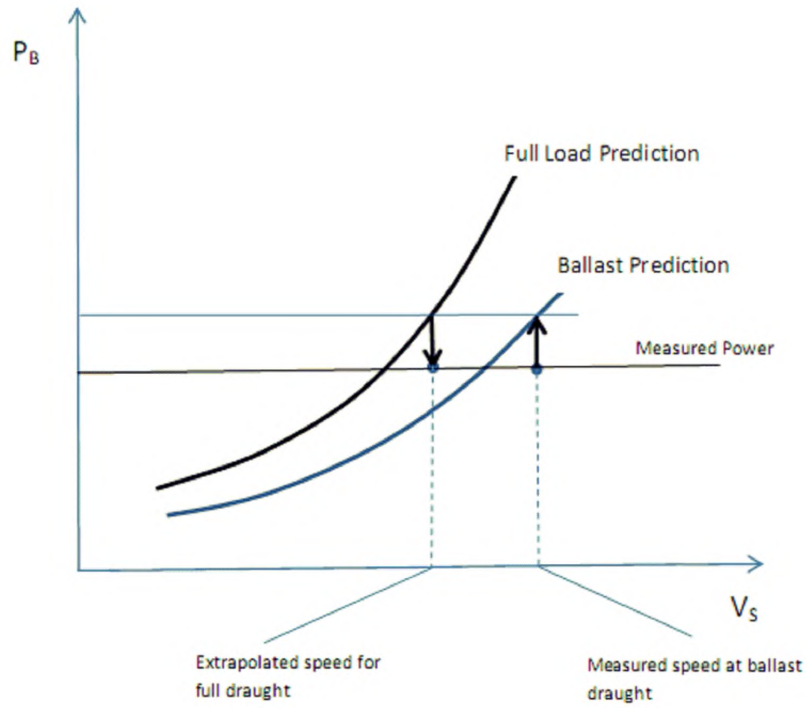


*Figure 4: Extrapolation from Measured Values at sea trial draught to EEDI Draught*

### 16.3 Revision of EEDI Technical File

The EEDI Technical File is to be revised, as necessary, by taking into account the results of sea trials. Such revision is to include, as applicable, the adjusted power curve based on the results of sea trial (namely, modified ship speed under the condition as specified in paragraph 2.2 of the IMO Calculation Guidelines), the finally determined deadweight/gross tonnage and the recalculated attained EEDI and required EEDI based on these modifications.

The revised EEDI Technical File is to be submitted to the verifier for the confirmation that the revised attained EEDI is calculated in accordance with regulation 20 of MARPOL Annex VI and the IMO Calculation Guidelines

## *17 VERIFICATION OF THE EEDI IN CASE OF MAJOR CONVERSION*

*Verification of the EEDI in case of major conversion is not taken into account in the first version of this document (see 1.3)*

# APPENDIX 1
# Review and witness points

*Table 4: Review and witness points*

| Ref. | Function | Survey method | Reference document | Documentation available to verifier | Remarks |
|---|---|---|---|---|---|
| 01 | EEDI Technical File | Review | IMO Verification Guidelines<br>This document | Documents in table 2 | |
| 02 | Limitation of power | Review | IMO Calculation Guidelines | Verification file of limitation technical means | Only If means of limitation are fitted |
| 03 | Electric Power Table | Review | Appendix 2 to IMO Calculation Guidelines<br>Appendix 2 to IMO Verification Guidelines | EPT<br>EPT-EEDI form | Only if PAE is significantly different from the values computed using the formula in 2.5.6.1 or 2.5.6.2 of the IMO Calculation Guidelines |
| 04 | Calibration of towing tank test measuring equipment | Review & witness | Appendix 3 | Calibration reports | Check at random that measuring devices are well identified and that calibration reports are currently valid |
| 05 | Model tests – ship model | Review & witness | Appendix 4 | Ship lines plan & offsets table<br>Ship model report | Checks described in Appendix 4.1 |
| 06 | Model tests – propeller model | Review & witness | Appendix 4 | Propeller model report | Checks described in Appendix 4.2 |
| 07 | Model tests – Resistance test, Propulsion test, Propeller open water test | Review & witness | Appendix 4 | Towing tank tests report | Checks described in Appendix 4.3<br>Note: propeller open water test is not needed if a stock propeller is used. In this case, the open water characteristics of the stock propeller are to be annexed to the towing tank tests report. |
| 08 | Model-ship extrapolation and correlation | Review | ITTC 7.5-02-03-01.4 1978 ITTC performance prediction method (rev.02 of 2011 or subsequent revision)<br><br>Appendix 4<br><br>This document 15.7 | Documents in table 2 | Check that the ship-model correlation is based on thrust identity with correlation factor according to method 1 ( $C_P - C_N$) or method 2 ($\Delta C_{FC} - \Delta w_C$)<br><br>Check that the power-speed curves obtained for the EEDI condition and sea trial condition are obtained using the same calculation process with justified values of experience-based parameters |
| 09 | Numerical calculations replacing towing tank tests | Review | ITTC 7.5-03-01-04 (latest revision) or equivalent | Report of calculations | |
| 10 | Electrical machinery survey prior to sea trials | Witness | Appendix 2 to IMO Verification Guidelines | | Only if $P_{AE}$ is computed from EPT |
| 11 | Programme of sea trials | Review | IMO Verification Guidelines | Programme of sea trials | Check minimum number of measurement points (3)<br>Check the EEDI condition in EPT (if $P_{AE}$ is computed from EPT) |

| Ref. | Function | Survey method | Reference document | Documentation available to verifier | Remarks |
|---|---|---|---|---|---|
| 12 | Sea trials | Witness | ISO 19019:2005 or ITTC 7.5-04-01-01.1 (latest revision) | | Check:<br>• Propulsion power, particulars of the engines<br>• Draught and trim<br>• Sea conditions<br>• Ship speed<br>• Shaft power & rpm<br>Check operation of means of limitations of engines or shaft power (if fitted)<br>Check the power consumption of selected consumers included in sea trials condition EPT (if $P_{AE}$ is computed from EPT) |
| 13 | Sea trials – corrections calculation | Review | ITTC Recommended Procedure 7.5-04-01-01.2 or equivalent | Sea trials report | Check that the displacement and trim of the ship in sea trial condition has been obtained with sufficient accuracy<br>Check compliance with ITTC Recommended Procedure 7.5-04-01-01.2 or equivalent |
| 14 | Sea trials – adjustment from trial condition to EEDI condition | Review | This document 16.2 | Power curves after sea trial | Check that the power curve estimated for EEDI condition is obtained by power adjustment |
| 15 | EEDI Technical File – revised after sea trials | Review | IMO Verification Guidelines | Revised EEDI Technical File | Check that the file has been updated according to sea trials results |

# APPENDIX 2
# Sample of document to be submitted to the verifier including additional information for verification

**Caution**

**Protection of Intellectual Property Rights**

This document contains confidential information (defined as additional information) of submitters. Additional information should be treated as strictly confidential by the verifier and failure to do so may lead to penalties. The verifier should note following requirements of IMO Verification Guidelines:

"*4.1.2 The information used in the verification process may contain confidential information of submitters, which requires Intellectual Property Rights (IPR) protection. In the case where the submitter want a non-disclosure agreement with the verifier, the additional information should be provided to the verifier upon mutually agreed terms and conditions.*"

## Revision list

| REV. | ISSUE DATE | DESCRIPTION | DRAWN | CHECKED | APPROVED |
|---|---|---|---|---|---|
| B | 01/05/2014 | Final stage: sections 1 to 16 | XYZ | YYY | ZZZ |
| A | 01/01/2013 | Design stage: sections 1 to 13 | XXX | YYY | ZZZ |

## Content


1 General ..... 25

2 Data ..... 25

3 Power curves ..... 27

4 Overview of propulsion system and electric power system ..... 27

5 Electric power table ..... 28

6 Tank test organization quality system ..... 30

7 Estimation process of power curves at design stage ..... 30

8 Lines and offsets of the ship ..... 33

9 Description of energy saving equipment ..... 33

10 Justification of SFC (documents attached to NOx Technical File of the parent engine) ..... 33

11 Calculation of attained EEDI at design stage ..... 34

12 Required EEDI ..... 34

13 Calculation of attained $EEDI_{weather}$ ..... 35

14 Lightweight check report ..... 35

15 Sea trial report with corrections ..... 35

16 Calculation of attained EEDI at final stage ..... 36

# 1 GENERAL

This calculation of the Energy Efficiency Design Index (EEDI) is based on:

- Resolution MEPC.203(62) amendments to include regulations on energy efficiency in MARPOL Annex VI
- Resolution MEPC.212(63) 2012 Guidelines on the method of calculation of the attained Energy Efficiency Design Index (EEDI) for new ships

Calculations are being dealt with according to the Industry Guidelines on calculation and verification of EEDI, 2012 issue.

# 2 DATA

## 2.1 Main parameters

| Parameter | Value | Reference |
|---|---|---|
| Owner | OWNER | |
| Builder | YARD | |
| Hull No. | 12346 | |
| IMO No. | 94111XX | |
| Ship's type | Bulk carrier | |
| Ship classification notations | I HULL, MACH, Bulk Carrier CSR BC-A (holds 2 and 4 may be empty) ESP GRAB[20] Unrestricted Navigation AUT-UMS, GREEN PASSPORT, INWATERSURVEY, MON-SHAFT | |
| | | |
| HULL PARTICULARS | | |
| Length overall | 191.0 m | |
| Length between perpendiculars | 185.0 m | |
| Breadth, moulded | 32.25 m | |
| Depth, moulded | 17.9 m | |
| Summer load line draught, moulded | 12.70 m | |
| Deadweight at summer load line draught | 55 000 DWT | |
| Lightweight | 11 590 tons | |
| Owner's voluntary structural enhancements | No | |
| | | |
| MAIN ENGINE | | |
| Type & manufacturer | BUILDER 6SRT60ME | |
| Specified Maximum Continuous Rating (SMCR) | 9 200 kW x 105 rpm | |
| SFC at 75% SMCR | 171 g/kWh | See paragraph 10.1 |
| Number of set | 1 | |
| Fuel type | Diesel/Gas oil | |
| | | |
| AUXILIARY ENGINES | | |
| Type & manufacturer | BUILDER 5X28 | |
| Specified Maximum Continuous Rating (SMCR) | 650 kW x 700 rpm | |
| SFC at 50% SMCR | 205 g/kWh | See paragraph 10.2 |
| Number of set | 3 | |
| Fuel type | Diesel/Gas oil | |
| | | |
| OVERVIEW OF PROPULSION SYSTEM AND ELECTRICITY SUPPLY SYSTEM | | See section 4 |
| | | |
| SHAFT GENERATORS | | |
| Type & manufacturer | None | |
| Rated electrical output power | | |
| Number of set | 0 | |
| | | |
| SHAFT MOTORS | | |

| Parameter | Value | Reference |
|---|---|---|
| Type & manufacturer | None | |
| Rated power consumption | | |
| Efficiency | | |
| Number of set | 0 | |
| | | |
| MAIN GENERATORS | | |
| Type & manufacturer | BUILDER AC120 | |
| Rated output | 605 kWe | |
| Efficiency | 0.93 | |
| Number of set | 3 | |
| | | |
| PROPULSION SHAFT | | |
| Propeller diameter | 5.9 m | |
| Propeller number of blades | 4 | |
| Voluntarily limited shaft propulsion power | No | |
| Number of set | 1 | |
| | | |
| ENERGY SAVING EQUIPMENT | | See section 9 |
| Description of energy saving equipment | Propeller boss cap fins | |
| Power reduction or power output | None | |

## 2.2 Preliminary verification of attained EEDI

| Parameter | Value | Reference |
|---|---|---|
| TOWING TANK TEST ORGANIZATION | | |
| Identification of organization | TEST corp. | See section 6. |
| ISO Certification or previous experience? | Previous experience | |
| | | |
| TOWING TANK TESTS | | |
| Exemption of towing tank tests | No | |
| Process and methodology of estimation of the power curves | | See section 7 |
| Ship model information | | See subparagraph 7.2.1 |
| Propeller model information | | See subparagraph 7.2.2 |
| EEDI & sea trial loading conditions | EEDI:<br>mean draft: 12.7 m<br>Trim 0<br><br>Sea trial ( ballast ):<br>mean draft: 5.8 m<br>Trim 2.6 m by stern | |
| Propeller open water diagram (model, ship) | | See paragraph 7.4 |
| Experience based parameters | | See paragraph 7.3 |
| Power curves at full scale | | See section 3 |
| Ship Reference speed | 14.25 knots | |
| | | |
| ELECTRIC POWER TABLE<br>(as necessary, as defined in IMO EEDI Calculation Guidelines) | Significant difference from 2.5.6 of IMO EEDI Calculation Guidelines | See section 5 |
| | | |
| CALCULATION OF ATTAINED EEDI | 5.06 | See section 11 |
| | | |
| CALCULATION OF REQUIRED EEDI | 5.27 | See section 12 |
| | | |
| CALCULATION OF ATTAINED $EEDI_{weather}$ | Not calculated | See section 13 |

## 2.3 Final verification of attained EEDI

| Parameter | Value | Reference |
|---|---|---|
| SEA TRIAL LOADING CONDITION | | |
| | | |
| POWER CURVES | | See section 3 |
| Sea trial report with corrections | | See section 15 |
| Ship Reference speed | 14.65 knots | |
| | | |
| FINAL DEADWEIGHT | | See section 14 |
| Displacement | 66 171 tons | |
| Lightweight | 11 621 tons | |
| Deadweight | 54 550 DWT | |
| | | |
| FINAL ATTAINED EEDI | 4.96 | See section 16 |

## 3 POWER CURVES

The power curves estimated at the design stage and modified after the sea trials are given in Figure 3.1.

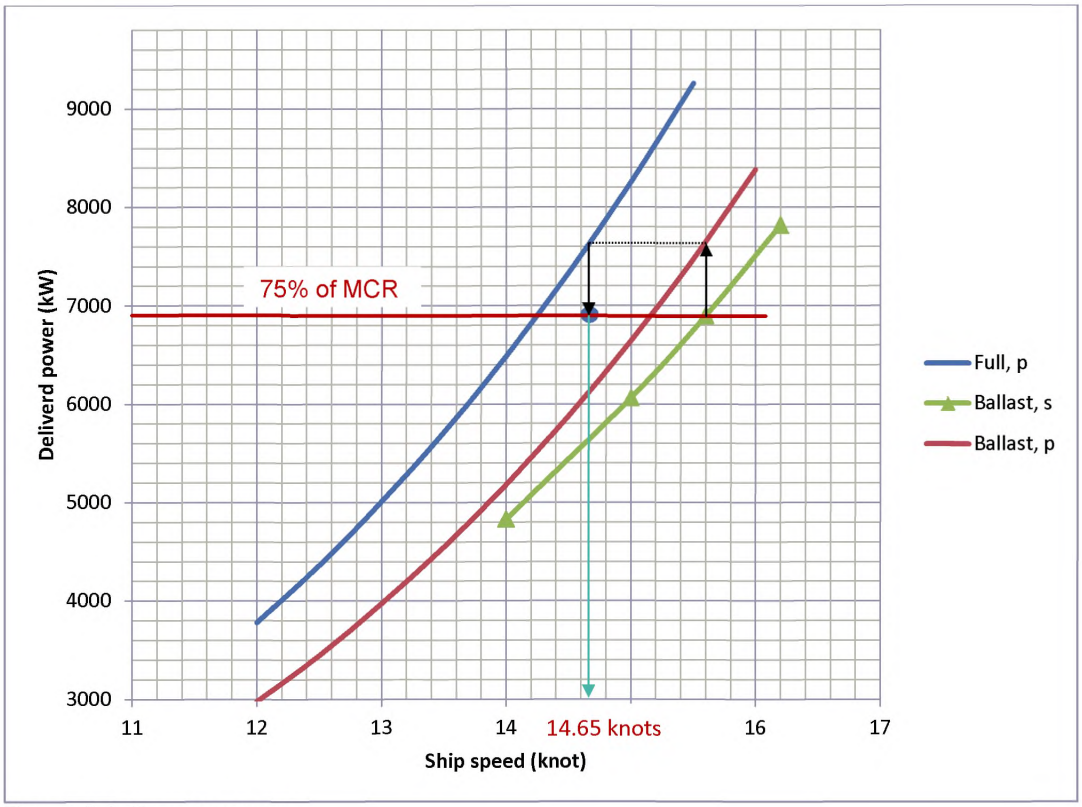


**Figure 3.1: Power curves**

## 4 OVERVIEW OF PROPULSION SYSTEM AND ELECTRIC POWER SYSTEM

Figure 4.1 shows the connections within the propulsion and electric power supply systems.

The characteristics of the main engines, auxiliary engines, electrical generators and propulsion electrical motors are given in table 2.1.

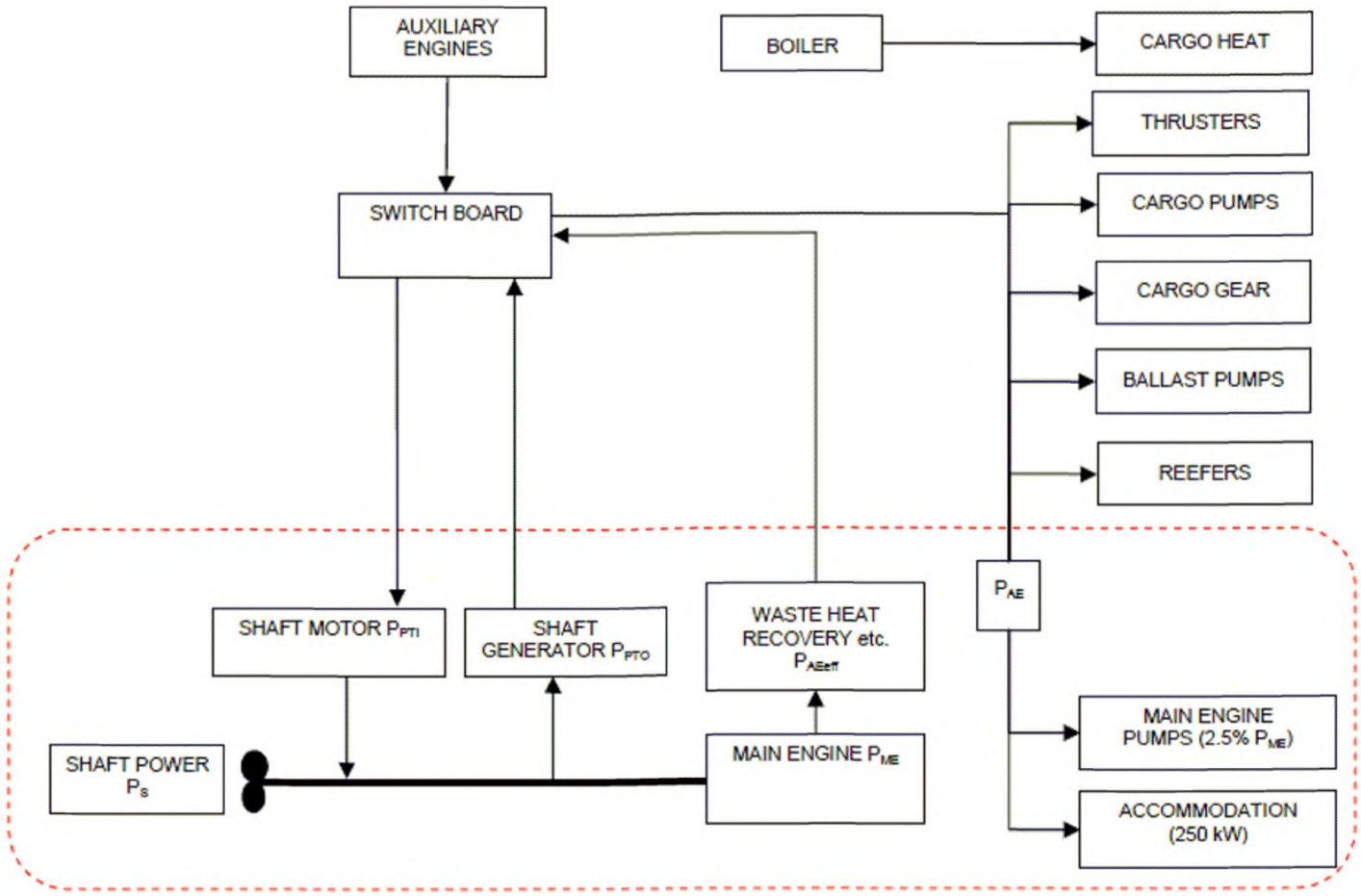


**Figure 4.1 scheme of the propulsion and power generation systems**

## 5 ELECTRIC POWER TABLE

The electric power for the calculation of EEDI is provided in table 5.1.

| Id | Group | Description | Mech. Power "Pm" | El. Motor output | Efficien. "e" | Rated el. Power "Pr" | load factor "kl" | duty factor "kd" | time factor "kt" | use factor "ku" | Necessary power "Pload" |
|---|---|---|---|---|---|---|---|---|---|---|---|
| 1 | A | STEERING GEAR | N.A. | N.A. | N.A. | 45,0 | 0,9 | 1 | 0,3 | 0,27 | 12.2 |
| 2 | A | HULL CATHODIC PROTECTION | N.A. | N.A. | N.A. | 10 | 1 | 1 | 1 | 1,00 | 10,0 |
| 3 | A | CRANE | N.A. | N.A. | N.A. | 10,00 | 0,2 | 1 | 1 | 0,20 | 2,0 |
| 4 | A | COMPASS | N.A. | N.A. | N.A. | 0,5 | 1 | 1 | 1 | 1,00 | 0,5 |
| 5 | A | RADAR NO.1 | N.A. | N.A. | N.A. | 1,3 | 1 | 0,5 | 1 | 0,50 | 0,7 |
| 6 | A | RADAR NO.2 | N.A. | N.A. | N.A. | 1,3 | 1 | 0,5 | 1 | 0,50 | 0,7 |
| 7 | A | NAVIGATION EQUIPMENT | N.A. | N.A. | N.A. | 5,0 | 1 | 1 | 1 | 1,00 | 5,0 |
| 8 | A | INTERNAL COMM. EQUIPMENT | N.A. | N.A. | N.A. | 2,5 | 1 | 1 | 0,1 | 0,10 | 0,2 |
| 9 | A | RADIO EQUIPMENT | N.A. | N.A. | N.A. | 3,5 | 1 | 1 | 0,1 | 0,10 | 0,4 |
| 10 | A | MOORING EQ. | N.A. | N.A. | N.A. | 7,0 | 1 | 1 | 0,1 | 0,10 | 0,7 |
| 11 | B | MAIN COOLING SEA WATER PUMP NO.1 | 28,0 | 30 | 0,925 | 30,3 | 0,9 | 0,66 | 1 | 0,59 | 18,0 |
| 12 | B | MAIN COOLING SEA WATER PUMP NO.2 | 28,0 | 30 | 0,925 | 30,3 | 0,9 | 0,66 | 1 | 0,59 | 18,0 |
| 13 | B | MAIN COOLING SEA WATER PUMP NO.3 | 28,0 | 30 | 0,925 | 30,3 | 0,9 | 0,66 | 1 | 0,59 | 18,0 |
| 14 | B | LT COOLING FW PUMP NO.1 | 28,0 | 30 | 0,925 | 30,3 | 0,9 | 0,66 | 1 | 0,59 | 18,0 |
| 15 | B | LT COOLING FW PUMP NO.2 | 28,0 | 30 | 0,925 | 30,3 | 0,9 | 0,66 | 1 | 0,59 | 18,0 |
| 16 | B | LT COOLING FW PUMP NO.3 | 28,0 | 30 | 0,925 | 30,3 | 0,9 | 0,66 | 1 | 0,59 | 18,0 |
| 17 | B | M/E COOLING WATER PUMP NO.1 | 13,0 | 15 | 0,9 | 14,4 | 1 | 0,5 | 1 | 0,50 | 7,2 |
| 18 | B | M/E COOLING WATER PUMP NO.2 | 13,0 | 15 | 0,9 | 14,4 | 1 | 0,5 | 1 | 0,50 | 7,2 |
| 19 | C | MAIN LUB. OIL PUMP NO.1 | 55,0 | 90 | 0,94 | 58,5 | 0,9 | 0,5 | 1 | 0,45 | 26,3 |

| Id | Group | Description | Mech. Power "Pm" | El. Motor output | Efficien. "e" | Rated el. Power "Pr" | load factor "kl" | duty factor "kd" | time factor "kt" | use factor "ku" | Necessary power "Pload" |
|---|---|---|---|---|---|---|---|---|---|---|---|
| 20 | C | MAIN LUB. OIL PUMP NO.2 | 55,0 | 90 | 0,94 | 58,5 | 0,9 | 0,5 | 1 | 0,45 | 26,3 |
| 21 | C | H.F.O. TRANSFER PUMP | 6,0 | 7,5 | 0,88 | 6,8 | 1 | 1 | 0,1 | 0,10 | 0,7 |
| 22 | C | D.O. TRANSFER PUMP | 6,0 | 7,5 | 0,88 | 6,8 | 1 | 1 | 0,1 | 0,10 | 0,7 |
| 23 | C | L.O. TRANSFER PUMP | 1,4 | 2,5 | 0,8 | 1,8 | 1 | 1 | 0,1 | 0,10 | 0,2 |
| 24 | C | TECHNICAL FRESH WATER PUMP NO.1 | 2,5 | 3,5 | 0,85 | 2,9 | 1 | 0,5 | 0,1 | 0,05 | 0,1 |
| 25 | C | TECHNICAL FRESH WATER PUMP NO.2 | 2,5 | 3,5 | 0,85 | 2,9 | 1 | 0,5 | 0,1 | 0,05 | 0,1 |
| 26 | C | E/R SUPPLY FAN NO.1 | 14,0 | 20 | 0,9 | 15,5 | 0,9 | 1 | 1 | 0,90 | 14,0 |
| 27 | C | E/R SUPPLY FAN NO.2 | 14,0 | 20 | 0,9 | 15,5 | 0,9 | 1 | 1 | 0,90 | 14,0 |
| 28 | C | E/R SUPPLY FAN NO.3 | 14,0 | 20 | 0,9 | 15,5 | 0,9 | 1 | 1 | 0,90 | 14,0 |
| 29 | C | E/R SUPPLY FAN NO.4 | 14,0 | 20 | 0,9 | 15,5 | 0,9 | 1 | 1 | 0,90 | 14,0 |
| 30 | C | PURIFIER ROOM EXH.VENTILATOR | 2,5 | 3 | 0,82 | 3,0 | 0,9 | 1 | 1 | 0,90 | 2,7 |
| 31 | C | PUMP HFO SUPPLY UNIT NO.1 | 2,1 | 3 | 0,8 | 2,6 | 0,9 | 0,5 | 1 | 0,45 | 1,2 |
| 32 | C | PUMP HFO SUPPLY UNIT NO.2 | 2,1 | 3 | 0,8 | 2,6 | 0,9 | 0,5 | 1 | 0,45 | 1,2 |
| 33 | C | CIRC. PUMP FOR HFO SUPPLY UNIT NO.1 | 2,8 | 3,5 | 0,84 | 3,3 | 0,9 | 0,5 | 1 | 0,45 | 1,5 |
| 34 | C | CIRC. PUMP FOR HFO SUPPLY UNIT NO.2 | 2,8 | 3,5 | 0,84 | 3,3 | 0,9 | 0,5 | 1 | 0,45 | 1,5 |
| 35 | C | H.F.O. SEPARATOR NO.1 | N.A. | N.A. | N.A. | 6,5 | 0,9 | 0,5 | 0,9 | 0,41 | 2,6 |
| 36 | C | H.F.O. SEPARATOR NO.2 | N.A. | N.A. | N.A. | 6,5 | 0,9 | 0,5 | 0,9 | 0,41 | 2,6 |
| 37 | C | MAIN AIR COMPRESSER NO.1 | N.A. | N.A. | N.A. | 43,0 | 1 | 0,5 | 0,1 | 0,05 | 2,2 |
| 38 | C | MAIN AIR COMPRESSER NO.2 | N.A. | N.A. | N.A. | 43,0 | 1 | 0,5 | 0,1 | 0,05 | 2,2 |
| 39 | C | SERVICE AIR COMPRESSER | N.A. | N.A. | N.A. | 22,0 | 1 | 1 | 0,1 | 0,10 | 2,2 |
| 40 | C | VENT. AIR SUPPLY | N.A. | N.A. | N.A. | 1,0 | 1 | 1 | 0,5 | 0,50 | 0,1 |
| 41 | C | BILGE WATER SEPARATOR | N.A. | N.A. | N.A. | 1,5 | 1 | 1 | 0,1 | 0,10 | 0,2 |
| 42 | C | M/E L.O. SEPARATOR | N.A. | N.A. | N.A. | 6,5 | 0,9 | 1 | 0,2 | 0,18 | 1,2 |
| 43 | C | G/E L.O. SEPARATOR | N.A. | N.A. | N.A. | 6,5 | 0,9 | 1 | 0,2 | 0,18 | 1,2 |
| 44 | D | HYDROPHORE PUMP NO.1 | 2,8 | 4 | 0,84 | 3,3 | 1 | 0,5 | 0,1 | 0,05 | 0,2 |
| 45 | D | HYDROPHORE PUMP NO.2 | 2,8 | 4 | 0,84 | 3,3 | 1 | 0,5 | 0,1 | 0,05 | 0,2 |
| 46 | D | HOT WATER CIRCULATING PUMP NO.1 | 0,5 | 1,0 | 0,8 | 0,8 | 1 | 0,5 | 0,2 | 0,10 | 0,1 |
| 47 | D | HOT WATER CIRCULATING PUMP NO.2 | 0,5 | 1,0 | 0,8 | 0,8 | 1 | 0,5 | 0,2 | 0,10 | 0,1 |
| 48 | E | E/R WORKSHOP WELDING SPACE EXH. | 0,5 | 0,8 | 0,8 | 0,6 | 0,9 | 1 | 1 | 0,90 | 0,6 |
| 49 | F | ECR COOLER UNIT | N.A. | N.A. | N.A. | 4,2 | 1 | 1 | 0,5 | 0,50 | 2,1 |
| 50 | F | FAN FOR AIR CONDITIONING PLANT | N.A. | N.A. | N.A. | 8,0 | 0,9 | 1 | 0,5 | 0,45 | 3,6 |
| 51 | F | COMP. AIR CONDITIONING PLANT NO.1 | N.A. | N.A. | N.A. | 10,0 | 0,9 | 1 | 0,5 | 0,45 | 4,5 |
| 52 | F | COMP. AIR CONDITIONING PLANT NO.2 | N.A. | N.A. | N.A. | 10,0 | 0,9 | 1 | 0,5 | 0,45 | 4,5 |
| 53 | F | COMP. AIR CONDITIONING PLANT NO.3 | N.A. | N.A. | N.A. | 10,0 | 0,9 | 1 | 0,5 | 0,45 | 4,5 |
| 54 | F | COMP. AIR CONDITIONING PLANT NO.4 | N.A. | N.A. | N.A. | 10,0 | 0,9 | 1 | 0,5 | 0,45 | 4,5 |
| 55 | G | FAN FOR GALLEY AIR COND. PLANT | N.A. | N.A. | N.A. | 1,5 | 0,9 | 1 | 0,5 | 0,45 | 0,7 |
| 56 | G | COMP. FOR GALLEY AIR COND. PLANT | N.A. | N.A. | N.A. | 3,5 | 0,9 | 1 | 0,5 | 0,45 | 1,6 |
| 57 | G | REF. COMPRESSOR NO.1 | N.A. | N.A. | N.A. | 4,0 | 1 | 0,5 | 0,1 | 0,05 | 0,2 |
| 58 | G | REF. COMPRESSOR NO.2 | N.A. | N.A. | N.A. | 4,0 | 1 | 0,5 | 0,1 | 0,05 | 0,2 |
| 59 | G | GALLEY EQUIPMENT | N.A. | N.A. | N.A. | 80,0 | 0,5 | 1 | 0,1 | 0,05 | 4,0 |
| 60 | H | VAC. COLLECTION SYSTEM | 2,4 | 3,0 | 0,8 | 3,0 | 1 | 1 | 1 | 1,00 | 3,0 |
| 61 | H | GALLEY EXH. | 1,2 | 1,5 | 0,8 | 1,5 | 1 | 1 | 1 | 1,00 | 1,5 |
| 62 | H | LAUNDRY EXH. | 0,1 | 0,15 | 0,8 | 0,1 | 1 | 1 | 1 | 1,00 | 0,1 |
| 63 | H | SEWAGE TREATMENT | N.A. | N.A. | N.A. | 4,5 | 1 | 1 | 0,1 | 0,10 | 0,5 |

| Id | Group | Description | Mech. Power "Pm" | El. Motor output | Efficien. "e" | Rated el. Power "Pr" | load factor "kl" | duty factor "kd" | time factor "kt" | use factor "ku" | Necessary power "Pload" |
|---|---|---|---|---|---|---|---|---|---|---|---|
| 64 | H | SEWAGE DISCHARGE | 3 | 7,5 | 0,88 | 3,4 | 0,9 | 1 | 0,1 | 0,09 | 0,3 |
| 65 | I | ACCOMMODATION LIGHTING | N.A. | N.A. | N.A. | 16,0 | 1 | 1 | 0,5 | 0,5 | 8,0 |
| 66 | I | E/R LIGHTING | N.A. | N.A. | N.A. | 18,0 | 1 | 1 | 1 | 1,00 | 18,0 |
| 67 | I | NAVIGATION LIGHTING | N.A. | N.A. | N.A. | 0,9 | 1 | 0,5 | 1 | 0,50 | 0,4 |
| 68 | I | BACK. NAV. LIGHTING | N.A. | N.A. | N.A. | 0,9 | 1 | 0,5 | 1 | 0,50 | 0,4 |
| | | | | | | | | **TOTAL POWER** | | | **354,0** |
| **$P_{AE}$ = Total Power / (average efficiency of generators) = 354/0.93 = 381 kW** | | | | | | | | | | | |

**Table 5.1: Electric power table for calculation of PAE**

## 6 TOWING TANK TEST ORGANIZATION QUALITY SYSTEM

Towing tank tests will be performed in TEST corp.

The quality control system of the towing tank test organization TEST corp. has been documented previously (see report 100 for the ship hull No. 12345) and the quality manual and calibration records are available to the verifier.

The measuring equipment has not been modified since the issue of report 100 and is listed in table 6.1.

| | Manufacturer | Model | Series | Lab. Id. | status |
|---|---|---|---|---|---|
| Propeller dynamometer | B&N | 6001 | 300 | 125-2 | Calibrated 01/01/2011 |
| ... | | | | | |

**Table 6.1: List of measuring equipment**

## 7 ESTIMATION PROCESS OF POWER CURVES AT DESIGN STAGE

### 7.1 Test procedure

The tests and their analysis are conducted by TEST corp. applying their standard correlation method (document is given in annex 1).

The method is based on thrust identity and references ITTC Recommended Procedure 7.5 - 02 - 03 -1.4 ITTC 1978 Trial Prediction Method (in its latest reviewed version of 2011), with prediction of the full scale rpm and delivered power by use of the $C_P - C_N$ correction factors.

The results are based on a Resistance Test, a Propulsion Test and use the Open Water Characteristics of the model propeller used during the tests and the Propeller Open Water Characteristics of the final propeller given in 7.4.

Results of the resistance tests and propulsion tests of the ship model are given in the report of TEST corp. given in annex 2.

### 7.2 Speed prediction

The ship delivered power $P_D$ and rate of revolutions $n_S$ are determined from the following equations:

$$P_D = C_P . P_{DS}$$
$$n_T = C_N . n_S$$

Where $C_N$ and $C_P$ are experience-based factors and $P_{DS}$ (resp. $n_S$) are the delivered power (resp. rpm) obtained from the analysis of the towing tank tests.

The ship total resistance coefficient $C_{TS}$ is given by:

$$C_{TS} = \frac{S_S + S_{BK}}{S_S}.[(1+k).C_{FS} + \Delta C_F] + C_R + C_{AAS} + C_{AppS}$$

Where:

$S_S$: ship hull wetted surface, here 9886 $m^2$

$S_{BK}$: wetted surface of bilge keels

k: form factor. Here 1+k = 1.38 over the speed range, determined according to ITTC standard procedure 7.5-02-02-01

$C_{FS}$: ship frictional resistance coefficient (computed according to ITTC 1957 formula)

$\Delta C_F$: roughness allowance, computed according to Bowden-Davison formula. Here $\Delta C_F$ = 0.000339

$C_R$: residual resistance coefficient

$C_{AAS}$: air resistance coefficient

$C_{AppS}$: ship appendages (propeller boss cap fins) resistance coefficient, computed as provided in annex 2.

The air resistance coefficient is computed according to the following formula:

$$C_{AAS} = C_{DA}.\frac{\rho_A.A_{VS}}{\rho_S.S_S}$$

Where:

$C_{DA}$ is the air drag coefficient, here 0.8

$\rho_A$ and $\rho_S$ are the air density and water density, respectively

$A_{VS}$ is the projected wind area, here 820 $m^2$

$C_{AAS} = 7.9.10^{-5}$

The delivered power $P_D$ results of the towing tank tests are summarized in table 7.1 for the EEDI condition (scantling draft) and in table 7.2 for the sea trial condition (light ballast draft).

| Model reference: SX100 - model scale: 40 | | | | | |
|---|---|---|---|---|---|
| Loading condition: EEDI loading condition (12.70 m draft) | | | | | |
| Resistance test: R001 | | Propulsion test: P001 | | Model propeller: Prop01 | |
| Ship speed V (knot) | Wake factor $w_{TM}$-$w_{TS}$ | Propeller thrust $T_S$ (kN) | Propeller torque $Q_S$ (kNm) | rpm on ship $n_S$ | Delivered Power $P_D$ (kW) |
| 12 | 0.098 | 522 | 467 | 78 | 3781 |
| 12.5 | 0.093 | 578 | 514 | 82 | 4362 |
| 13 | 0.089 | 638 | 563 | 86 | 5004 |
| 13.5 | 0.081 | 701 | 615 | 90 | 5710 |
| 14 | 0.079 | 768 | 669 | 93 | 6486 |
| 14.5 | 0.086 | 838 | 727 | 97 | 7333 |
| 15 | 0.091 | 912 | 786 | 101 | 8257 |
| 15.5 | 0.099 | 990 | 849 | 105 | 9261 |
| Experience-based factor $C_P$: 1.01 | | | | | |
| Experience based factor $C_N$: 1.02 | | | | | |

**Table 7.1: results of trial prediction in EEDI condition**

| Model reference: SX100 - model scale: 40 | | | | | |
|---|---|---|---|---|---|
| Loading condition: Sea trial condition (5.80 m draft) | | | | | |
| Resistance test: R002 | | Propulsion test: POO2 | | Model propeller: Prop01 | |
| Ship speed V (knot) | Wake factor $w_{TM}$-$w_{TS}$ | Propeller thrust $T_S$ (kN) | Propeller torque $Q_S$ (kNm) | rpm on ship $n_S$ | Delivered Power $P_D$ (kW) |
| 12 | 0,079 | 406 | 379 | 72 | 2974 |
| 12,5 | 0,081 | 451 | 418 | 76 | 3445 |
| 13 | 0,083 | 500 | 459 | 79 | 3968 |
| 13,5 | 0,085 | 551 | 503 | 83 | 4545 |
| 14 | 0,087 | 606 | 549 | 87 | 5181 |
| 14,5 | 0,088 | 664 | 597 | 90 | 5878 |
| 15 | 0,091 | 725 | 648 | 94 | 6641 |
| 15,5 | 0,089 | 790 | 701 | 98 | 7474 |
| Experience-based factor $C_P$: 1.05 | | | | | |
| Experience based factor $C_N$: 1.03 | | | | | |

**Table 7.2: results of trial prediction in sea trial condition**

The predicted results are represented on the speed curves given in Figure 3.1. The EEDI condition results are indexed (Full, p), the sea trial condition results (Ballast, p).

### 7.3 Ship and propeller models

The ship model is at scale λ = 40. The characteristics are given in table 7.3.

| | |
|---|---|
| Identification (model number or similar) | SX 100 |
| Material of construction | Wood |
| Principal dimensions | |
| Length between perpendiculars ($L_{PP}$) | 4.625 m |
| Length of waterline ($L_{WL}$) | 4.700 m |
| Breadth ($B$) | 0.806 m |
| Draught ($T$) | 0.317 m |
| Design displacement ($\Delta$) (kg, fresh water) | 1008.7 kg |
| Wetted surface area | 6.25 $m^2$ |
| Details of turbulence stimulation | Sand strips |
| Details of appendages | rudder |
| Tolerances of manufacture | +/- 2.5 mm on length<br>+/- 1 mm on breadth |

Table 7.3: characteristics of the ship model

The propeller model used during the tests is a stock model with the following characteristics:

| | |
|---|---|
| Identification (model number or similar) | Prop01 |
| Materials of construction | aluminium |
| Blade number | 4 |
| Principal dimensions | |
| Diameter | 147.5 mm |
| Pitch-Diameter Ratio ($P/D$) | 0.68 |
| Expanded blade Area Ratio ($A_E/A_0$) | 0.60 |
| Thickness Ratio ($t/D$) | 0.036 |
| Hub/Boss Diameter ($d_h$) | 25 mm |
| Tolerances of manufacture | Diameter (D): ± 0.10 mm<br>Thickness ( t ): ± 0.10 mm<br>Blade width (c): ± 0.20 mm<br>Mean pitch at each radius (P/D): ± 0.5% of design value. |

Table 7.4: characteristics of the stock propeller used during the tests

### 7.4 Open water characteristics of propeller

The open water characteristics of the stock model propeller are given in annex 2. The open water characteristics of the ship propeller are given in Figure 7.1.

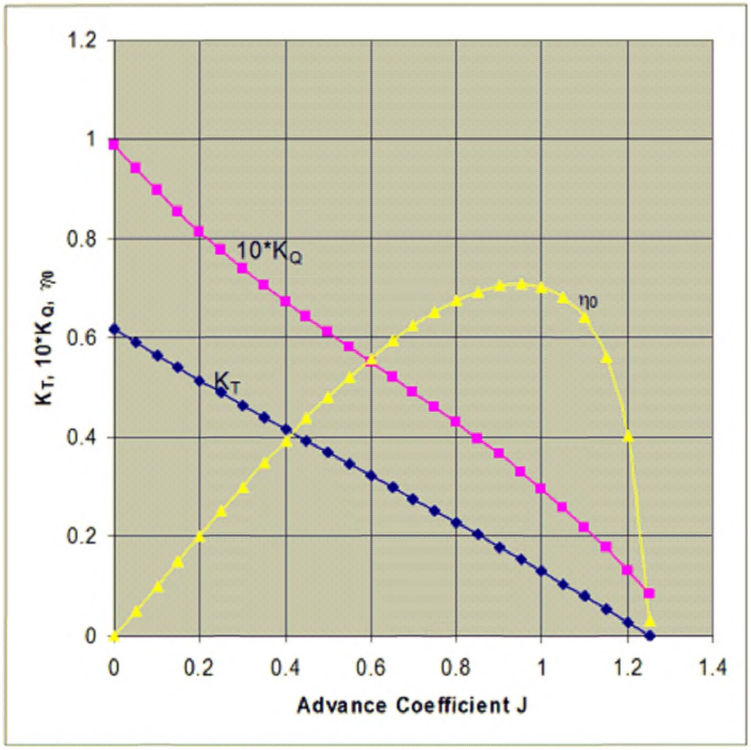


**Figure 7.1: open water characteristics of ship propeller**

## 8 LINES AND OFFSETS OF THE SHIP

The ships lines and offsets table are given in Annex 3.

## 9 DESCRIPTION OF ENERGY SAVING EQUIPMENT

### 9.1 Energy saving equipment of which effects are expressed as $P_{AEeff}(i)$ and/or $P_{eff}(i)$ in the EEDI calculation formula

None here.

### 9.2 Other energy saving equipment

The propeller boss cap fins are described in annex 4.

## 10 JUSTIFICATION OF SFC (DOCUMENTS ATTACHED TO $NO_X$ TECHNICAL FILE OF THE PARENT ENGINE)

### 10.1 Main engine

The shop test report for the parent main engine is provided in annex 5.1. The SFOC has been corrected to ISO conditions.

### 10.2 Auxiliary engine

The technical file of the EIAPP certificate of the auxiliary engines is provided in annex 5.2. The SFOC has been corrected to ISO conditions.

## 11 CALCULATION OF ATTAINED EEDI AT DESIGN STAGE

### 11.1 Input parameters and definitions

The EEDI quantities and intermediate calculations are listed in table 11.1:

| EEDI quantity | Value | Remarks |
|---|---|---|
| $C_{FME}$ | 3.206 | Marine Diesel oil is used for shop test of the main engine |
| $P_{ME}$ | 6 900 kW | No shaft generator installed ( $P_{PTO}$ = 0)<br>MCR is 9200 kW PME = 0.75x9200 = 6 900 kW |
| $SFC_{ME}$ | 171 g/kWh | According to parent engine shop test report in ISO conditions (see 10.1) |
| $CF_{AE}$ | 3.206 | Marine diesel oil is used for shop test of the auxiliary engine |
| $P_{PTI}$ | 0 | No shaft motor installed |
| $P_{AE}$ | 381 kW | MCR of the engine is 9200 kW, less than 10000kW<br>$P_{AE} = 0.05.(\sum_{i=1}^{nME} MCR_{MEi} + \frac{\sum_{i=1}^{nPTI} P_{PTI(i)}}{0.75})$<br>$P_{AE}$ = 0.05*9200 = 460 kW<br><br>According to electric power table included in table 5.1, ∑Pload(i) = 354 kW<br>The weighted average efficiency of generators = 0.93 (KWelec/kWmech)<br>$P_{AE}$ = ∑Pload(i) / 0.93 = 381 kW<br>The difference (460 – 381) KW is expected to vary EEDI by slightly more than 1%, so 381 kW is considered. |
| $SFC_{AE}$ | 205 g/kWh | According to technical file of EIAPP certificate in ISO conditions (see 10.2) |
| $P_{eff}$ | 0 | No mechanical energy efficient devices<br>The propeller boss cap fins act by reducing ship resistance |
| $P_{AEeff}$ | 0 | No auxiliary power reduction |
| $f_{eff}$ | | Not relevant here (see above) |
| $f_j$ | 1.0 | The ship is a bulk carrier without ice notations. fj = 1.0 |
| $f_i$ | 1.017 | No ice notation $f_{iICE}$ = 1.0<br>No voluntary structural enhancement for this ship $f_{iVSE}$ = 1.0<br>The ship has the notation Bulk carrier CSR:<br>$f_{iCSR}$ = 1 + 0.08*$LWT_{CSR}$ / $DWT_{CSR}$ = 1+0.08*11590/55000 = 1.017<br>fi = $f_{iICE}$ x $f_{iVSE}$ x $f_{iCSR}$ = 1.017 |
| $f_w$ | 1.0 | For attained EEDI calculation under regulation 20 and 21 of MARPOL Annex VI, $f_w$ is 1.0 |
| $f_c$ | 1.0 | The ship is a bulk carrier $f_c$ = 1.0 |
| Capacity | 55000 | For a bulk carrier, Capacity is deadweight = 55 000 tons |
| $V_{ref}$ | 14.25 knots | At design stage, reference speed is obtained from the towing tank test report and delivered power in scantling draft (EEDI) condition is given in table 7.1<br>In table 7.1 $P_D$ = 1.0 x $P_{ME}$ = 6900 kW<br>The reference speed is read on the speed curve corresponding to table 7.1 at intersection between curve *Full, p* and 6900 kW<br>$V_{ref}$ = 14.25 knots |

Table 11.1: Parameters in attained EEDI calculation

### 11.2 Result

For this vessel, Attained EEDI is:

$$\frac{(\prod_{j=1}^{n} f_j).(\sum_{i=1}^{nME} P_{ME(i)}.C_{FME(i)}.SFC_{ME(i)}) + P_{AE}.C_{FAE}.SFC_{AE} + \{(\prod_{j=1}^{n} f_j).\sum_{i=1}^{nPTI} P_{PTI(i)} - \sum_{i=1}^{neff} f_{eff(i)}.P_{AEeff(i)}\}.C_{FAE}.SFC_{AE} - \sum_{i=1}^{neff} f_{eff(i)}.P_{eff(i)}.C_{FME}.SFC_{ME})}{f_i.f_c.Capacity.f_w.V_{ref}}$$

Attained EEDI = (6900*3.206*171+381*3.206*205) / (1.017*55000*14.25) = 5.06 g/t.nm

## 12 REQUIRED EEDI

According to MARPOL Annex VI, Chapter 4, Regulation 21, the required EEDI is:
(1-x/100) x reference line value
The reference line value = $a*b^{-c}$ where a, b, c are given for a bulk carrier as:
*a= 961.79 b = deadweight of the ship c = 0.477*

So reference line value = 5.27 g/t.nm
In Phase 0 (between 1 Jan 2013 and 31 Dec 2014) above 20000 DWT, x = 0
So Required EEDI = 5.27 g/t.nm

Figure 12.1 provides the relative position of attained EEDI with reference to required value.

As a conclusion, for this vessel:

- attained EEDI = 5.06 g/t.nm
- required EEDI = 5.27 g/t.nm
- **Regulation criteria is satisfied with 4% margin**

R

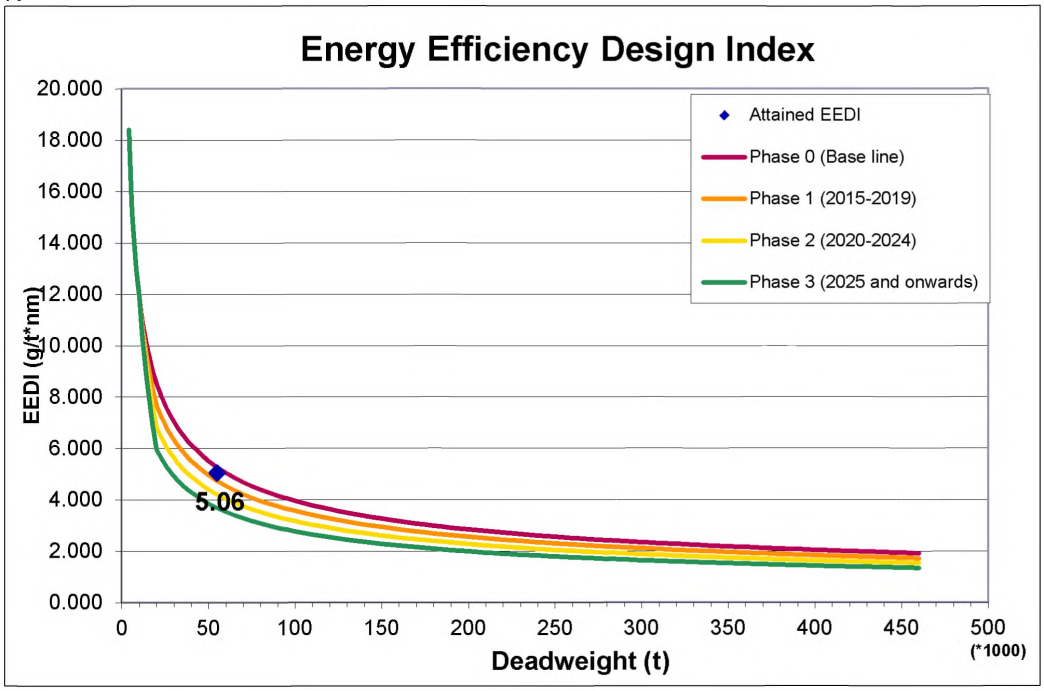


**Figure 12.1: Required EEDI value**

## 13 CALCULATION OF ATTAINED $EEDI_{WEATHER}$

Not calculated.

## 14 LIGHTWEIGHT CHECK REPORT

The lightweight check report is provided in annex 6. The final characteristics of the ship are:

| | |
|---|---|
| Displacement | 66 171 tons |
| Lightweight | 11 621 tons |
| Deadweight | 54 550 DWT |

## 15 SEA TRIAL REPORT WITH CORRECTIONS

The sea trial report is provided in annex 7. The results of the sea trial after corrections by BSRA and ITTC standard methods are given on curve *Ballast,s* on Figure 3.1.

## 16 CALCULATION OF ATTAINED EEDI AT FINAL STAGE

### 16.1 Recalculated values of parameters

The EEDI quantities and intermediate calculations are listed in table 16.1. Parameters which have not been modified from the preliminary verification stage are marked "no change".

| EEDI quantity | Value | Remarks |
|---|---|---|
| $C_{FME}$ | 3.206 | No change |
| $P_{ME}$ | 6 900 kW | No change |
| $SFC_{ME}$ | 171 g/kWh | No change |
| $CF_{AE}$ | 3.206 | No change |
| $P_{PTI}$ | 0 | No change |
| $P_{AE}$ | 381 kW | The electric power table has been validated and endorsed (see the electric power table form in annex 8) |
| $SFC_{AE}$ | 205 g/kWh | No change |
| $P_{eff}$ | 0 | No change |
| $P_{AEeff}$ | 0 | No change |
| $f_{eff}$ | | No change |
| $f_j$ | 1.0 | No change |
| $f_i$ | 1.017 | Deadweight and lightweight are computed from lightweight check:<br>$f_{iCSR}$ = 1 + 0.08*$LWT_{CSR}$ / $DWT_{CSR}$ = 1+0.08*11621/54550 = 1.017<br>fi = $f_{iICE}$ x $f_{iVSE}$ x $f_{iCSR}$ = 1.017 (unchanged) |
| $f_c$ | 1.0 | No change |
| Capacity | 54550 DWT | Deadweight has been computed from the lightweight check. See 14. |
| $V_{ref}$ | 14.65 knots | The reference speed in EEDI condition has been adjusted according to the delivered power adjustment methodology defined in Industry Guidelines.<br>The reference speed is read on the speed curves diagram in Figure 3.1<br>$V_{ref}$ = 14.65 knots |

Table 11.1: Parameters in attained EEDI calculation (final stage)

### 16.2 Final result

Attained EEDI = (6900*3.206*171+381*3.206*205) / (1.017*54550*14.65) = 4.96 g/t.nm

Required EEDI in Phase 0: $961.79*54550^{-0.477}$ = 5.29 g/t.nm

**Regulation criteria is satisfied with 6% margin**

## List of annexes to the Document

| | |
|---|---|
| Annex 1 | Standard model-ship extrapolation and correlation method |
| Annex 2 | Towing tank tests report |
| Annex 3 | Ship lines and offsets table |
| Annex 4 | Description of energy saving equipment |
| Annex 5 | 5.1 $NO_x$ Technical File of main engine(s) |
| | 5.2 $NO_x$ Technical File of auxiliary engines |
| Annex 6 | Lightweight check report |
| Annex 7 | Sea trials report |
| Annex 8 | EPT-EEDI form |

# APPENDIX 3
# Verifying the calibration of model test equipment

**Quality Control System**

The existence of a Quality Control System is not sufficient to guarantee the correctness of the test procedures; QS, including ISO 9000, only give documentary evidence what is to be and has been done. Quality Control Systems do not evaluate the procedures as such.
The Test institute is to have a quality control system (QS). If the QS is not certified ISO 9000 a documentation of the QS is to be shown. A Calibration Procedure is given in ITTC Recommended Procedures 7.6-01-01

## 1. Measuring Equipment

An important aspect of the efficient operation of Quality System according to measuring equipment is a full identification of devices used for the tests.
Measuring equipment instruments are to have their individual records in which the following data are to be placed:
- name of equipment
- manufacturer
- model
- series
- laboratory identification number ( optionally)
- status ( verified, calibration, indication )

Moreover the information about the date of last and next calibration or verification is to be placed on this record. All the data are to be signed by authorised officer.

## 2. Measuring Standards

Measuring standards used in laboratory for calibration purposes are to be confirmed (verified) by Weights and Measures Office at appropriate intervals (defined by the Weights and Measures Office).
All measuring standards used in laboratory for the confirmation purposes are to be supported by certificates, reports or data sheets for the equipment confirming the source, uncertainty and conditions under which the results were obtained.

## 3. Calibration

The calibration methods may differ from institution to institution, depending on the particular measurement equipment. The calibration shall comprise the whole measuring chain (gauge, amplifier, data acquisition system etc.).
The laboratory shall ensure that the calibration tests are carried out using certified measuring standards having a known valid relationship to international or nationally recognised standards.

a) Calibration Report

"Calibration reports" shall include:
- identification of certificate for measuring standards
- description of environmental conditions

- calibration factor or calibration curve
- uncertainty of measurement
- minimum and maximum capacity" for which the error of measuring instrument is within specified (acceptable) limits.

b) Intervals of Confirmation

The measuring equipment (including measuring standards) is to be confirmed at appropriate (usually periodical) intervals, established on the basis of their stability, purpose and wear. The intervals are to be such that confirmation is carried out again prior to any probable change in the equipment accuracy, which is important for the equipment reliability. Depending on the results of preceding calibrations, the confirmation period may be shortened, if necessary, to ensure the continuous accuracy of the measuring equipment.
The laboratory is to have specific objective criteria for decisions concerning the choice of intervals of confirmation.

c) Non - Conforming Equipment

Any item of measuring equipment
- that has suffered damage,
- that has been overloaded or mishandled,
- that shows any malfunction,
- whose proper functioning is subject to doubt,
- that has exceeded its designated confirmation interval, or
- the integrity of whose seal has been violated, is to be removed from service by segregation, clear labelling or cancelling.

Such equipment is not to be returned to service until the reasons for its nonconformity have been eliminated and it is confirmed again.
If the results of calibration prior to any adjustment or repair were such as to indicate a risk of significant errors in any of the measurements made with the equipment before the calibration, the laboratory shall take the necessary corrective action.

## 4. Instrumentation

Especially the documentation on the calibration of the following Instrumentation is to be shown.

a) Carriage Speed

The carriage speed is to be calibrated as a distance against time. Period between the calibrations is to be in accordance with the internal procedure of the towing tank test organisation.

b) Water Temperature

Measured by calibrated thermometer with certificate (accuracy 0.1°C).

c) Trim Measurement

Calibrated against a length standard. Period between the calibrations is to be in accordance with the internal procedure of the towing tank test organisation.

d) Resistance Test

Resistance Test is a force measurement. It is to be calibrated against a standard weight. Calibration normally before each test series.

e) Propulsion Test

During Self Propulsion Test torque, thrust and rate of revolutions are measured. Thrust and Torque are calibrated against a standard weight. Rate of revolution is normally measured by a pulse tachometer and an electronic counter which can be calibrated e.g. by an oscillograph.
Period between the calibrations is to be in accordance with the internal procedure of the towing tank test organisation.

f) Propeller Open Water Test

During Propeller Open Water Test torque, thrust and rate of revolutions are measured. Thrust and Torque are calibrated against a standard weight. Rate of revolution is normally measured by a pulse tachometer and an electronic counter which can be calibrated e.g. by an oscillograph.
Period between the calibrations is to be in accordance with the internal procedure of the towing tank test organisation.

Examples of documentation sheets are given in the Annexes 1 and 2:

## ANNEX 1: SAMPLE OF MEASURING EQUIPMENT CARD

| QM 4.10.5.1 | Measurement Equipment Card | Laboratory Identification Number | |
|---|---|---|---|

Equipment | Manufacturer / Serial No. | Model / Date of Purchase

Basic range

Work Instructions
Calibration Instructions
Verified at

**Status**
Calibrated ☐
Indication ☐
Verified ☐

| Date of Check | Certificate. No. | Period | Date of Next Check | Responsible | Department | Approval |
|---|---|---|---|---|---|---|
| | | | | | | |
| | | | | | | |
| | | | | | | |
| | | | | | | |
| | | | | | | |
| | | | | | | |
| | | | | | | |
| | | | | | | |
| | | | | | | |
| | | | | | | |
| | | | | | | |
| | | | | | | |
| | | | | | | |
| | | | | | | |
| | | | | | | |

## ANNEX 2: SAMPLE OF CALIBRATION CERTIFICATE.

| | | | | | |
|---|---|---|---|---|---|
| QM 4.10.6.2 | **CALIBRATION CERTIFICATE for** PROPELLER | | **NO.** | | |
| | | | **LIN** | | |
| Calibration Instructions | | | Calibrated by : | | |
| Date of calibration | | | Checked by : | | |
| Measurement combination | | | | | |
| DYNAMOMETER | Manufacturer | | Model | | |
| LIN | Serial No | | Date of purchased | | |
| | Work instruction | | Last calibration | | |
| Cable | | | | | |
| AMPLIFIER | Manufacturer | | Model | | |
| L | Serial No | | Date of purchased | | |
| | Work instruction | | Type of transducer | | |
| | Excitation | | Frequency of excit. | | |
| **Thrust :** | Amp. gain | | Zero not load | | |
| **Torque :** | Amp. gain | | Zero not load | | |
| Cable | | | | | |
| A/C TRANSDUCER | Manufacturer | | Model | | |
| L | Serial No | | Date of purchased | | |
| | Work instruction | | Certificate No | | |
| | | | | | |
| MEASUREMENT STANDARDS | Mass | | Certificate No | | |
| | Length arm of force | | Certificate No | | |
| | Voltmeter | | Certificate No | | |

QM
4.10.6.2

# CALIBRATION RESULTS

Environmental condition

| | | | | |
|---|---|---|---|---|
| Place of test : | | | | |
| Temperature : | initial | | final | |
| Dampness : | initial | | final | |

Computation results of calibrations test

| Executed program | procedure | certificate NO. |
|---|---|---|
| | | |

| | Thrust | Torque |
|---|---|---|
| Drift : | | |
| Non Linearity errors : | | |
| Hysteresis : | | |
| Precision errors : | | |
| Total uncertainty : | | |
| Calibration factor : | | |

Calibration requests :

| Specified limits of | Thrust | Torque |
|---|---|---|
| errors : | | |
| Maximum capacity : | | |
| Minimum capacity : | | |

**Note : tests and computations results are included in report**

Prepared by : ..... Approved by : ..... Date : .....

# APPENDIX 4
# Review and witnessing of model test procedures

The Model Tests is to be witnessed by the verifier. Special attention is to be given to the following items:

## 1. Ship Model

### Hydrodynamic Criteria

a) *Model Size:* The model should generally be as large as possible for the size of the towing tank taking into consideration wall, blockage and finite depth effects, as well as model mass and the maximum speed of the towing carriage (ITTC Recommended Procedure 7.5-02-02-01 Resistance Test).

b) *Reynolds Number:* The Reynolds Number is to be, if possible, above $2.5 \times 10^5$.

c) *Turbulence Stimulator:* In order to ensure turbulent flow, turbulence stimulators have to be applied.

### Manufacture Accuracy

With regard to accuracy the ship model is to comply with the criteria given in ITTC Recommended Procedure 7.5-01-01-01, Ship Models.
The following points are to be checked:

a) *Main dimensions*, $L_{PP}$, $B$

b) *Surface finish*, model is to be smooth. Particular care is to be taken when finishing the model to ensure that geometric features such as knuckles, spray rails, and boundaries of transom sterns remain well-defined

c) *Stations and Waterlines* The spacing and numbering of displacement stations and waterlines are to be properly defined and accurately marked on the model.

d) *Displacement* The model is to be run at the correct calculated displacement. The model weight is to be correct to within 0.2% of the correct calculated weight displacement. In case the marked draught is not met when the calculated displacement has been established the calculation of the displacement and the geometry of the model compared to the ship has to be revised. (Checking the Offsets).

### Documentation in the report

Identification (model number or similar)
Materials of construction
Principal dimensions
Length between perpendiculars ($L_{PP}$)
Length of waterline ($L_{WL}$)
Breadth ($B$)
Draught ($T$)
For multihull vessels, longitudinal and transverse hull spacing
Design displacement ($\Delta$) (kg, fresh water)
Hydrostatics, including water plane area and wetted surface area
Details of turbulence stimulation
Details of appendages
Tolerances of manufacture

## 2. Propeller Model

The Manufacturing Tolerances of Propellers for Propulsion Tests are given IN ITTC Recommended Procedures 7.5-01-01-01, Ship Models Chapter 3.1.2. Attention: Procedure 7.5 – 01-02-02 Propeller Model Accuracy is asking for higher standards which are applicable for cavitation tests and not required for self-propulsion tests.

**Propeller Model Accuracy**

***Stock Propellers***

During the "stock-propeller" testing phase, the geometrical particulars of the final design propeller are normally not known. Therefore, the stock propeller pitch (in case of CPP) is recommended to be adjusted to the anticipated propeller shaft power and design propeller revolutions. (ITTC Recommended Procedure 7.5-02-03-01.1 Propulsion/Bollard Pull Test).

***Adjustable Pitch Propellers***

Before the Tests the pitch adjustment is to be controlled.

***Final Propellers***

Propellers having diameter (D) typically from 150 mm to 300 mm is to be finished to the following tolerances:
Diameter (D) ± 0.10 mm
Thickness (t) ± 0.10 mm
Blade width (c) ± 0.20 mm
Mean pitch at each radius (P/D): ± 0.5% of de-sign value.

Special attention is to be paid to the shaping accuracy near the leading and trailing edges of the blade section and to the thickness distributions. The propeller will normally be completed to a polished finish.

**Documentation in the report**

Identification (model number or similar)
Materials of construction
Principal dimensions
Diameter
Pitch-Diameter Ratio ($P/D$)
Expanded blade Area Ratio ($A_E/A_0$)
Thickness Ratio ($t/D$)
Hub/Boss Diameter ($d_h$)
Tolerances of manufacture

## 3. Model Tests

### a) Resistance Test

The Resistance Test is to be performed acc. to ITTC Recommended Procedure 7.5-02-02-01 Resistance Test.

**Documentation in the report**

*Model Hull Specification*:
- Identification (model number or similar)
- Loading condition
- Turbulence stimulation method
- Model scale
- Main dimensions and hydrostatics (see ITTC Recommended Procedure 7.5-01-01-01 Ship Models and chapter 2 of this paper).

*Particulars of the towing tank*, including length, breadth and water depth
*Test date*
*Parametric data for the test:*
- Water temperature
- Water density
- Kinematic viscosity of the water
- Form factor (even if (1+k) =1.0 is applicable, this is to be stated)
- $\Delta C_F$ or $C_A$

*For each speed*, the following measured and extrapolated data is to be given as a minimum:

- Model speed
- Resistance of the model
- Sinkage fore and aft, or sinkage and trim

**b) Propulsion Test**

The Propulsion Test is to be performed acc. to ITTC Recommended Procedure 7.5-02-03-01.1 Propulsion Test/Bollard Pull.

**Documentation in the report**

*Model Hull Specification:*
- Identification (model number or similar)
- Loading condition
- Turbulence stimulation method
- Model scale
- Main dimensions and hydrostatics (see ITTC Recommended Procedure 7.5-01-01-01 Ship Models and chapter 2 of this paper).

*Model Propeller Specification*
- Identification (model number or similar)
- Model Scale
- Main dimensions and particulars (see ITTC Recommended Procedure 7.5-01-01-01 Ship Models and chapter 3 of this paper)

*Particulars of the towing tank*, including length, breadth and water depth
*Test date*
*Parametric data for the test:*
- Water temperature
- Water density
- Kinematic viscosity of the water
- Form factor (even if (1+k) = 1.0 is applicable, this is to be stated)
- $\Delta C_F$ or $C_A$
- Appendage drag scale effect correction factor (even if a factor for scale effect correction is not applied, this is to be stated).

*For each speed* the following measured data and extrapolated data is to be given as a minimum:
- Model speed
- External tow force
- Propeller thrust,
- Propeller torque
- Rate of revolutions.
- Sinkage fore and aft, or sinkage and trim

- The extrapolated values are also to contain the resulting delivered power $P_D$.

**c) Propeller Open Water Test**

In many cases the Propeller Open Water Characteristics of a stock propeller will be available and the Propeller Open Water Test need not be repeated for the particular project. A documentation of the Open Water Characteristics (Open Water Diagram) will suffice.
In case of a final propeller or where the Propeller Open Water Characteristics is not available the Propeller Open Water Test is to be performed acc. to ITTC Recommended Procedure 7.5-02-03-02.1 Open Water Test.

**Documentation in the report**

*Model Propeller Specification:*
- Identification (model number or similar)
- Model scale
- Main dimensions and particulars (see recommendations of ITTC Recommended Procedure 7.5-01-01-01 Ship Models and chapter 3 of this paper)
- Immersion of centreline of propeller shaft in the case of towing tank

*Particulars of the towing tank or cavitation tunnel,* including length, breadth and water depth or test section length, breadth and height.
*Test date*
*Parametric data for the test:*
- Water temperature
- Water density
- Kinematic viscosity of the water
- Reynolds Number (based on propeller blade chord at 0.7*R*)

*For each speed* the following data is to be given as a minimum:
- Speed
- Thrust of the propeller
- Torque of the propeller
- Rate of revolution
- Force of nozzle in the direction of the propeller shaft (in case of ducted propeller)

*Propeller Open Water Diagram*

## 4. Speed Trial Prediction

The principal steps of the Speed Trial Prediction Calculation are given in ITTC Recommended Procedure 7.5 - 02 - 03 -1.4 ITTC 1978 Trial Prediction Method (in its latest reviewed version of 2011). The main issue of a speed trial prediction is to get the loading of the propeller correct and also to assume the correct full scale wake. The right loading of the propeller can be achieved by increasing the friction deduction by the added resistance (e.g. wind resistance etc.) and run the self-propulsion test already at the right load or it can be achieved by calculation as given in Procedure 7.5-02-03-1.4.
A wake correction is always necessary for single screw ships. For twin screw ships it can be neglected unless the stern shape is of twin hull type or other special shape.
The following scheme indicates the main components of a speed trial prediction. It it to be based on a Resistance Test, a Propulsion Test and an Open Water Characteristics of the used model propeller during the tests and the Propeller Open Water Characteristics of the final propeller.

**Documentation**

*Model Hull Specification:*
- Identification (model number or similar)
- Loading condition
- Turbulence stimulation method
- Model scale
- Main dimensions and hydrostatics (see ITTC Recommended Procedure 7.5-01-01-01 Ship Models and chapter 2 of this paper).

*Model Propeller Specification*
- Main dimensions and particulars (see ITTC Recommended Procedure 7.5-01-01-01 Ship Models and chapter 3 of this paper)

*Particulars of the towing tank, including length, breadth and water depth*

*Resistance Test Identification* (Test No. or similar)

*Propulsion Test Identification* (Test No. or similar)

*Open Water Characteristics of the model propeller*

*Open Water Characteristics of ship propeller*

*Ship Specification:*
- Projected wind area
- Wind resistance coefficient
- Assumed BF
- $C_P$ and $C_n$

Principle Scheme for Speed Trial Prediction

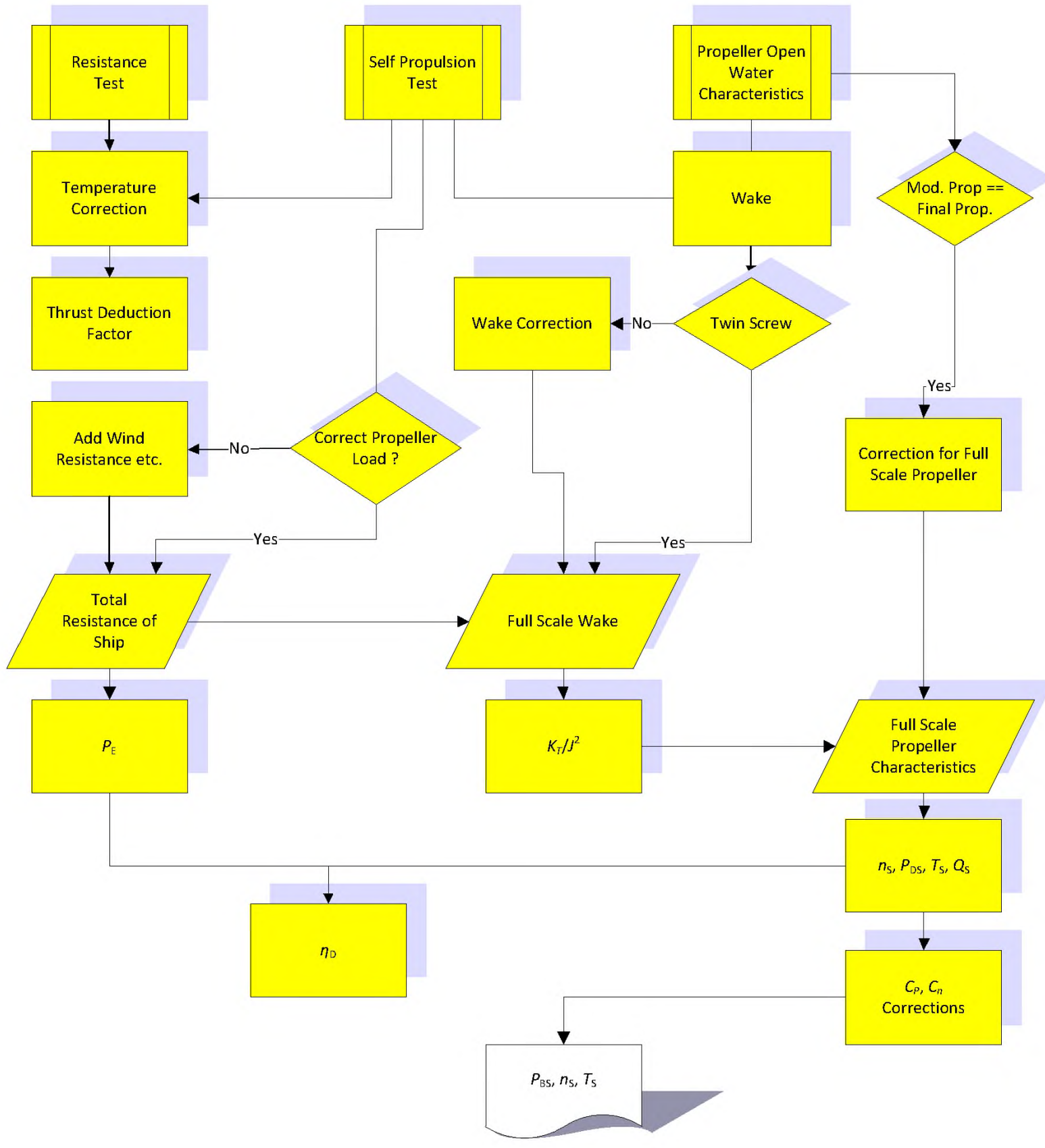

*For each speed* the following *calculated data* is to be given as a minimum:
- Ship speed
- Model wake coefficient
- Ship wake coefficient
- Propeller thrust on ship
- Propeller torque on ship
- Rate of revolutions on ship
- Predicted power on ship (delivered power on Propeller(s) $P_D$)
- Sinkage fore and aft, or sinkage and trim

# Scheme for review and witnessing Model Tests

Checking of Model Testing Procedure

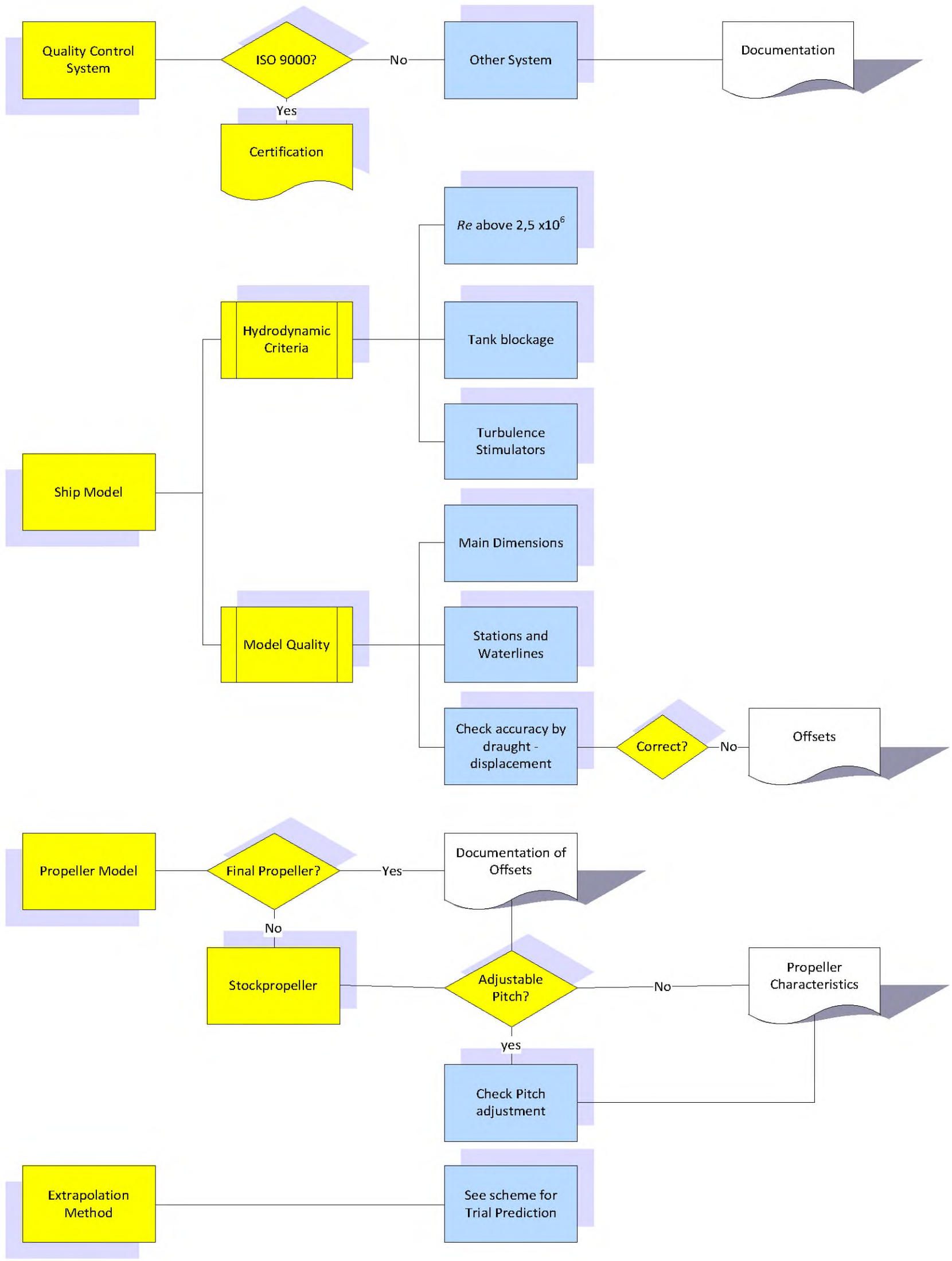

# APPENDIX 5
# Sample report "Preliminary Verification of EEDI"

**ATTESTATION**
**PRELIMINARY VERIFICATION OF ENERGY EFFICIENCY DESIGN INDEX (EEDI)**
**by *VERIFIER***

Statement N° EEDI/2012/XXX

**Ship particulars:**

Ship Owner: _____

Shipyard: _____

Ship's Name: _____

IMO Number: _____

Hull number: _____

Building contract date: _____

Type of ship: _____

Port of registry: _____

Deadweight: _____

**Summary results of EEDI**

| | |
|---|---|
| Reference speed | VV.V knots |
| Attained EEDI | X.XX g/t.nm |
| Required EEDI | Y.YY g/t.nm |

**Supporting documents**

| **Title** | **ID and/or remarks** |
|---|---|
| EEDI Technical File | RRRR dated 01/01/2013 |

This is to certify:

1. That the attained EEDI of the ship has been calculated according to the *2012 Guidelines on the method of calculation of the attained Energy Efficiency Design Index (EEDI) for new ships*, IMO Resolution MEPC.212(63)

2. That the preliminary verification of the EEDI shows that the ship complies with the applicable requirements in regulation 20 and regulation 21 of MARPOL Annex VI amended by Resolution MEPC.203(62).

Completion date of preliminary verification of EEDI: xx/xx/xxxx

Issued at: _____ on: _____

Signature of the Verifier

# УНИФИЦИРОВАННЫЕ ИНТЕРПРЕТАЦИИ МАКО

# IACS UNIFIED INTERPRETATIONS

# SC 191 (Nov 2004) (Rev.1 May 2005) (Rev.2 Oct 2005) (Corr. Dec 2005) (Rev.3 Mar 2006) (Rev.4 Sept 2011) (Corr.1 Nov 2011) (Rev.5 May 2013) (Rev.6 May 2014) (Corr.1 Sept 2014) (Rev.7 Jan 2015) (Corr.1 June 2016)

# IACS Unified Interpretations (UI) SC 191 for the application of amended SOLAS regulation II-1/3-6 (resolution MSC.151(78)) and revised Technical provisions for means of access for inspections (resolution MSC.158(78))

Note:

1. This UI is to be applied by IACS Members and Associates when acting as recognized organizations, authorized by flag State Administrations to act on their behalf, unless otherwise advised, from 1 January 2005.

2. Rev.1 (May 2005) introduced new Annex to UI SC 191. Rev.1 is to be applied by IACS Members and Associates from 1 July 2005.

3. Rev.2 (Oct.2005) re-categorized the Annex to UI SC191 (Rev.1) as Recommendation No.91.

   Rev.2 (Oct.2005 / Corr. Dec. 2005) is to be applied by IACS Members and Associates to ships contracted for construction on or after 1 May 2006.

   Refer to IMO MSC/Circ. 1176.

4. The 'contracted for construction' date means the date on which the contract to build the vessel is signed between the prospective owner and the shipbuilder. For further details about the date of 'contract for construction', refer to IACS Procedural Requirement (PR) No. 29.

5. Rev.3 is to be applied by IACS Members and Associates from 1 October 2006.

6. Rev.4 is to be applied by IACS Members to ships contracted for construction from 1 July 2012.

7. Rev.5 is to be applied by IACS Members to ships contracted for construction from 24 June 2013.

8. Rev.6 is to be applied by IACS Members to ships contracted for construction from 1 July 2015.

9. Rev.7 is to be applied by IACS Members to ships contracted for construction from 1 July 2016.

**SC 191 (cont)**

**SOLAS regulation II-1/3-6, section 1**

1 Application

1.1 Except as provided for in paragraph 1.2, this regulation applies to oil tankers of 500 gross tonnage and over and bulk carriers, as defined in regulation IX/1, of 20,000 gross tonnage and over, constructed on or after 1 January 2006.

1.2 Oil tankers of 500 gross tonnage and over constructed on or after 1 October 1994 but before 1 January 2005 shall comply with the provisions of regulation II-1/12-2 adopted by resolution MSC.27(61).

**Interpretation**

**Oil tankers:**

This regulation is only applicable to oil tankers having integral tanks for carriage of oil in bulk, which is contained in the definition of oil in Annex 1 of MARPOL 73/78. Independent oil tanks can be excluded.

Regulation II-1/3-6 is not normally applied to FPSO or FSO unless the Administration decides otherwise.

**Technical Background**

Means of Access (MA) specified in the Technical provisions contained in resolution MSC.158(78) are not specific with respect to the application to integral cargo oil tanks or also to independent cargo oil tanks. ESP requirements of oil tankers have been established assuming the target cargo oil tanks are integral tanks. The MA regulated under SOLAS regulation II-1/3-6 is for overall and close-up inspections as defined in regulation IX/1. Therefore it is assumed that the target cargo oil tanks are those of ESP, i.e. integral cargo tanks.

Regulation II-1/3-6 is applicable to FPSO or FSO if they are subject to the scope of ESP as contained in resolution A.1049(27) (2011 ESP Code), as amended.

**Ref.**

SOLAS regulation IX/1 and resolution A.1049(27) (2011 ESP Code), as amended.

**SC 191 (cont)**

**SOLAS regulation II-1/3-6, paragraph 2.1**

2.1 Each space shall be provided with a permanent means of access to enable, throughout the life of a ship, overall and close-up inspections and thickness measurements of the ship's structures to be carried out by the Administration, the company, as defined in regulation IX/1, and the ship's personnel and others as necessary. Such means of access shall comply with the requirements of paragraph 5 and with the Technical provisions for means of access for inspections, adopted by the Maritime Safety Committee by resolution MSC.133(76), as may be amended by the Organization, provided that such amendments are adopted, brought into force and take effect in accordance with the provisions of article VIII of the present Convention concerning the amendment procedures applicable to the Annex other than chapter 1.

**Interpretation**

Each space for which close-up inspection is not required such as fuel oil tanks and void spaces forward of cargo area, may be provided with a means of access necessary for overall survey intended to report on the overall conditions of the hull structure.

**SC 191 (cont)**

**SOLAS regulation II-1/3-6, paragraph 2.2**

2.2 Where a permanent means of access may be susceptible to damage during normal cargo loading and unloading operations or where it is impracticable to fit permanent means of access, the Administration may allow, in lieu thereof, the provision of movable or portable means of access, as specified in the Technical provisions, provided that the means of attaching, rigging, suspending or supporting the portable means of access forms a permanent part of the ship's structure. All portable equipment shall be capable of being readily erected or deployed by ship's personnel.

**Interpretation**

Some possible alternative means of access are listed under paragraph 3.9 of the Technical Provisions for means of access for inspection(TP). Always subject to acceptance as equivalent by the Administration, alternative means such as an unmanned robot arm, ROV's and dirigibles with necessary equipment of the permanent means of access for overall and close-up inspections and thickness measurements of the deck head structure such as deck transverses and deck longitudinals of cargo oil tanks and ballast tanks, are to be capable of:

- safe operation in ullage space in gas-free environment;
- introduction into the place directly from a deck access.

When considering use of alternative means of access as addressed by paragraph 3.9 of the TP, refer to IACS Recommendation No.91 "Guidelines for Approval/Acceptance of Alternative Means of Access".

**Technical Background**

Innovative approaches, in particular a development of robot in place of elevated passageways, are encouraged and it is considered worthwhile to provide the functional requirement for the innovative approach.

**SC 191 (cont)**

**SOLAS regulation II-1/3-6, paragraph 2.3**

2.3 The construction and materials of all means of access and their attachment to the ship's structure shall be to the satisfaction of the Administration. The means of access shall be subject to survey prior to, or in conjunction with, its use in carrying out surveys in accordance with regulation I/10.

**Interpretation**

**Inspection**

The MA arrangements, including portable equipment and attachments, are to be periodically inspected by the crew or competent inspectors as and when it is going to be used to confirm that the MAs remain in serviceable condition.

**Procedures**

1. Any Company authorised person using the MA shall assume the role of inspector and check for obvious damage prior to using the access arrangements. Whilst using the MA the inspector is to verify the condition of the sections used by close up examination of those sections and note any deterioration in the provisions. Should any damage or deterioration be found, the effect of such deterioration is to be assessed as to whether the damage or deterioration affects the safety for continued use of the access. Deterioration found that is considered to affect safe use is to be determined as "substantial damage" and measures are to be put in place to ensure that the affected section(s) are not to be further used prior effective repair.

2. Statutory survey of any space that contains MA shall include verification of the continued effectiveness of the MA in that space. Survey of the MA shall not be expected to exceed the scope and extent of the survey being undertaken. If the MA is found deficient the scope of survey is to be extended if this is considered appropriate.

3. Records of all inspections are to be established based on the requirements detailed in the ships Safety Management System. The records are to be readily available to persons using the MAs and a copy attached to the MA Manual. The latest record for the portion of the MA inspected is to include as a minimum the date of the inspection, the name and title of the inspector, a confirmation signature, the sections of MA inspected, verification of continued serviceable condition or details of any deterioration or substantial damage found. A file of permits issued is to be maintained for verification.

**Technical Background**

It is recognised that MA may be subject to deterioration in the long term due to corrosive environment and external forces from ship motions and sloshing of liquid contained in the tank. MA therefore is to be inspected at every opportunity of tank/space entry. The above interpretation is to be contained in a section of the MA Manual.

**SC 191 (cont)**

**SOLAS regulation II-1/3-6, paragraph 3.1**

3 Safe access to cargo holds, cargo tanks, ballast tanks and other spaces

3.1 Safe access* to cargo holds, cofferdams, ballast tanks, cargo tanks and other spaces in the cargo area shall be direct from the open deck and such as to ensure their complete inspection. Safe access to double bottom spaces or to forward ballast tanks may be from a pump-room, deep cofferdam, pipe tunnel, cargo hold, double hull space or similar compartment not intended for the carriage of oil or hazardous cargoes.

* Refer to the Revised recommendations for entering enclosed spaces aboard ships, adopted by the Organization by resolution A.1050(27).

**Interpretation**

Access to a double side skin space of bulk carriers may be either from a topside tank or double bottom tank or from both.

The wording "not intended for the carriage of oil or hazardous cargoes" applies only to "similar compartments", i.e. safe access can be through a pump-room, deep cofferdam, pipe tunnel, cargo hold or double hull space.

**Technical Background**

Unless used for other purposes, the double side skin space is to be designed as a part of a large U-shaped ballast tank and such space is to be accessed through the adjacent part of the tank, i.e. topside tank or double bottom/bilge hopper tank. Access to the double side skin space from the adjacent part rather than direct from the open deck is justified. Any such arrangement is to provide a directly routed, logical and safe access that facilitates easy evacuation of the space.

**SC 191 (cont)**

**SOLAS regulation II-1/3-6, paragraph 3.2**

3.2 Tanks, and subdivisions of tanks, having a length of 35 m or more shall be fitted with at least two access hatchways and ladders, as far apart as practicable. Tanks less than 35 m in length shall be served by at least one access hatchway and ladder. When a tank is subdivided by one or more swash bulkheads or similar obstructions which do not allow ready means of access to the other parts of the tank, at least two hatchways and ladders shall be fitted.

**Interpretation**

A cargo oil tank of less than 35 m length without a swash bulkhead requires only one access hatch.

Where rafting is indicated in the ship structures access manual as the means to gain ready access to the under deck structure, the term "*similar obstructions*" referred to in the regulation includes internal structures (e.g., webs >1.5m deep) which restrict the ability to raft (at the maximum water level needed for rafting of under deck structure) directly to the nearest access ladder and hatchway to deck. When rafts or boats alone, as an alternative means of access, are allowed under the conditions specified in resolution A.1049(27) (2011 ESP Code), as amended, permanent means of access are to be provided to allow safe entry and exit. This means:

a) access direct from the deck via a vertical ladder and small platform fitted approximately 2m below the deck in each bay; or

b) access to deck from a longitudinal permanent platform having ladders to deck in each end of the tank. The platform shall, for the full length of the tank, be arranged in level with, or above, the maximum water level needed for rafting of under deck structure. For this purpose, the ullage corresponding to the maximum water level is to be assumed not more than 3m from the deck plate measured at the midspan of deck transverses and in the middle length of the tank. (See Figure below). A permanent means of access from the longitudinal permanent platform to the water level indicated above is to be fitted in each bay (e.g., permanent rungs on one of the deck webs inboard of the longitudinal permanent platform).

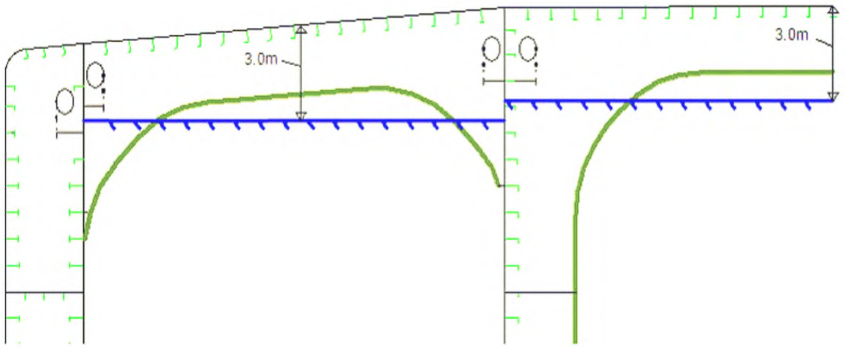

**SC 191 (cont)**

**SOLAS regulation II-1/3-6, paragraph 4.1**

4 Ship structure access manual

4.1 A ship's means of access to carry out overall and close-up inspections and thickness measurements shall be described in a Ship structure access manual approved by the Administration, an updated copy of which shall be kept on board. The Ship structure access manual shall include the following for each space:

.1 plans showing the means of access to the space, with appropriate technical specifications and dimensions;

.2 plans showing the means of access within each space to enable an overall inspection to be carried out, with appropriate technical specifications and dimensions. The plans shall indicate from where each area in the space can be inspected;

.3 plans showing the means of access within the space to enable close-up inspections to be carried out, with appropriate technical specifications and dimensions. The plans shall indicate the positions of critical structural areas, whether the means of access is permanent or portable and from where each area can be inspected;

.4 instructions for inspecting and maintaining the structural strength of all means of access and means of attachment, taking into account any corrosive atmosphere that may be within the space;

.5 instructions for safety guidance when rafting is used for close-up inspections and thickness measurements;

.6 instructions for the rigging and use of any portable means of access in a safe manner;

.7 an inventory of all portable means of access; and

.8 records of periodical inspections and maintenance of the ship's means of access.

**Interpretation**

The access manual is to address spaces listed in paragraph 3 of the regulation II-1/3-6.

As a minimum the English version is to be provided.

The ship structure access manual is to contain at least the following two parts:

Part 1: Plans, instructions and inventory required by paragraphs 4.1.1 to 4.1.7 of regulation II-1/3-6. This part is to be approved by the Administration or the organization recognised by the Administration.

Part 2: Form of record of inspections and maintenance, and change of inventory of portable equipment due to additions or replacement after construction. This part is to be approved for its form only at new building.

The following matters are to be addressed in the ship structure access manual:

1. The access manual is to clearly cover scope as specified in the regulations for use by crews, surveyors and port State control officers.

**SC 191 (cont)**

2. Approval / re-approval procedure for the manual, i.e. any changes of the permanent, portable, movable or alternative means of access within the scope of the regulation and the Technical provisions are subject to review and approval by the Administration or by the organization recognised by the Administration.

3. Verification of MA is to be part of safety construction survey for continued effectiveness of the MA in that space which is subject to the statutory survey.

4. Inspection of MA by the crew and/or a competent inspector of the company as a part of regular inspection and maintenance (see interpretation for paragraph 2.3 of SOLAS regulation II-1/3-6).

5. Actions to be taken if MA is found unsafe to use.

6. In case of use of portable equipment plans showing the means of access within each space indicating from where and how each area in the space can be inspected.

Refer to IACS Recommendation No.90 "Ship Structural Access Manual"

**SC 191 (cont)**

**SOLAS regulation II-1/3-6, paragraph 4.2**

4.2 For the purpose of this regulation "critical structural areas" are locations which have been identified from calculations to require monitoring or from the service history of similar or sister ships to be sensitive to cracking, buckling, deformation or corrosion which would impair the structural integrity of the ship.

**Interpretation**

1) Critical structural areas are to be identified by advanced calculation techniques for structural strength and fatigue performance, if available, and feed back from the service history and design development of similar or sister ships.

2) Reference is to be made to the following publications for critical structural areas, where applicable:

- Oil tankers: Guidance Manual for Tanker Structures by TSCF;
- Bulk carriers: Bulk Carriers Guidelines for Surveys, Assessment and Repair of Hull Structure by IACS;
- Oil tankers and bulk carriers: resolution A.1049(27) (2011 ESP Code), as amended.

**Technical Background**

These documents contain the relevant information for the present ship types. However identification of critical areas for new double hull tankers and double side skin bulk carriers of improved structural design is to be made by structural analysis at the design stage, this information is to be taken in to account to ensure appropriate access to all identified critical areas.

**SC 191 (cont)**

**SOLAS regulation II-1/3-6, paragraph 5.1**

5 General technical specifications

5.1 For access through horizontal openings, hatches or manholes, the dimensions shall be sufficient to allow a person wearing a self-contained air-breathing apparatus and protective equipment to ascend or descend any ladder without obstruction and also provide a clear opening to facilitate the hoisting of an injured person from the bottom of the space. The minimum clear opening shall not be less than 600 mm x 600 mm. When access to a cargo hold is arranged through the cargo hatch, the top of the ladder shall be placed as close as possible to the hatch coaming. Access hatch coamings having a height greater than 900 mm shall also have steps on the outside in conjunction with the ladder.

**Interpretation**

The minimum clear opening of 600 mm x 600 mm may have corner radii up to 100 mm maximum. The clear opening is specified in MSC/Circ.686 to keep the opening fit for passage of personnel wearing a breathing apparatus. In such a case where as a consequence of structural analysis of a given design the stress is to be reduced around the opening, it is considered appropriate to take measures to reduce the stress such as making the opening larger with increased radii, e.g. 600 x 800 with 300 mm radii, in which a clear opening of 600 x 600 mm with corner radii up to 100mm maximum fits.

**Technical Background**

The interpretation is based upon the established Guidelines in MSC/Circ.686.

**Ref.**

Paragraphs 9 of Annex of MSC/Circ.686.

**SC 191 (cont)**

**SOLAS regulation II-1/3-6, paragraph 5.2**

5.2 For access through vertical openings, or manholes, in swash bulkheads, floors, girders and web frames providing passage through the length and breadth of the space, the minimum opening shall be not less than 600 mm x 800 mm at a height of not more than 600 mm from the bottom shell plating unless gratings or other foot holds are provided.

**Interpretation**

1. The minimum clear opening of not less than 600 mm x 800 mm may also include an opening with corner radii of 300 mm. An opening of 600mm in height x 800mm in width may be accepted as access openings in vertical structures where it is not desirable to make large opening in the structural strength aspects, i.e. girders and floors in double bottom tanks.

2. Subject to verification of easy evacuation of injured person on a stretcher the vertical opening 850 mm x 620 mm with wider upper half than 600 mm, while the lower half may be less than 600 mm with the overall height not less than 850 mm is considered an acceptable alternative to the traditional opening of 600 mm x 800 mm with corner radii of 300 mm.

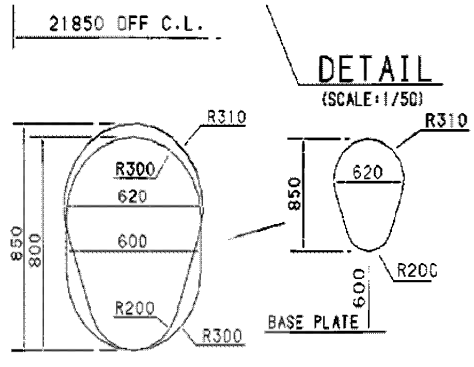


3. If a vertical opening is at a height of more than 600 mm steps and handgrips are to be provided. In such arrangements it is to be demonstrated that an injured person can be easily evacuated.

**Technical Background**

The interpretation is based upon the established Guidelines in MSC/Circ.686 and an innovative design is considered for easy access by humans through the opening.

**Ref.**

Paragraphs 11 of Annex of MSC/Circ.686.

**SC 191 (cont)**

**Technical Provision, resolution MSC.158(78), paragraph 1.3**

**1. Preamble**

1.3 In order to address this issue, the Organization has developed these Technical provisions for means of access for inspections (hereinafter called the "Technical provisions"), intended to facilitate close-up inspections and thickness measurements of the ship's structure referred to in SOLAS regulation II-1/3-6 on Access to and within spaces in, and forward of, the cargo area of oil tankers and bulk carriers. The Technical provisions do not apply to the cargo tanks of combined chemical/oil tankers complying with the provisions of the IBC Code.

**Interpretation**

A "combined chemical/oil tankers complying with the provisions of the IBC Code" is a tanker that holds both a valid IOPP certificate as tanker and a valid certificate of fitness for the carriage of dangerous chemicals in bulk. i.e. a tanker that is certified to carry both oil cargoes under MARPOL Annex I and Chemical cargoes in chapter 17 of the IBC Code either as full or part cargoes.

The Technical provisions are to be applied to ballast tanks of combined chemical/oil tankers complying with the provisions of the IBC Code.

**SC 191 (cont)**

**Technical Provision, resolution MSC.158(78), paragraph 1.4**

**1. Preamble**

1.4 Permanent means of access which are designed to be integral parts of the structure itself are preferred and Administrations may allow reasonable deviations to facilitate such designs.

**Interpretation**

In the context of the above requirement, the deviation shall be applied only to distances between integrated PMA that are the subject of paragraph 2.1.2 of Table 1.

Deviations shall not be applied to the distances governing the installation of underdeck longitudinal walkways and dimensions that determine whether permanent access are required or not, such as height of the spaces and height to elements of the structure (e.g. cross-ties).

**SC 191 (cont)**

**Technical Provision, resolution MSC.158(78), paragraph 3.1**

3.1 Structural members subject to the close-up inspections and thickness measurements of the ship's structure referred to in SOLAS regulation II-1/ 3-6, except those in double bottom spaces, shall be provided with a permanent means of access to the extent as specified in table 1 and table 2, as applicable. For oil tankers and wing ballast tanks of ore carriers, approved alternative methods may be used in combination with the fitted permanent means of access, provided that the structure allows for its safe and effective use.

**Interpretation**

The permanent means of access to a space can be credited for the permanent means of access for inspection.

**Technical Background**

The Technical provisions specify means of access to a space and to hull structure for carrying out overall and close up surveys and inspections. Requirements of MA to hull structure may not always be suitable for access to a space. However if the MA for access to a space can also be used for the intended surveys and inspections such MA can be credited for the MA for use for surveys and inspections.

**SC 191 (cont)**

**Technical Provision, resolution MSC.158(78), paragraph 3.3**

3.3 Elevated passageways forming sections of a permanent means of access, where fitted, shall have a minimum clear width of 600 mm, except for going around vertical webs where the minimum clear width may be reduced to 450 mm, and have guard rails over the open side of their entire length. Sloping structure providing part of the access shall be of a non-skid construction. Guard rails shall be 1,000 mm in height and consist of a rail and intermediate bar 500 mm in height and of substantial construction. Stanchions shall be not more than 3 m apart.

**Interpretation**

1. Sloping structures are structures that are sloped by 5 or more degrees from horizontal plane when a ship is in upright position at even-keel.

2. Guard rails are to be fitted on the open side and should be at least 1,000 mm in height. For stand alone passageways guard rails are to be fitted on both sides of these structures. Guardrail stanchions are to be attached to the PMA. The distance between the passageway and the intermediate bar and the distance between intermediate bar and the top rail shall not be more than 500 mm.

3. Discontinuous top handrails are allowed, provided the gap does not exceed 50 mm.

The same maximum gap is to be considered between the top handrail and other structural members (i.e. bulkhead, web frame, etc.).

The maximum distance between the adjacent stanchions across the handrail gaps is to be 350 mm where the top and mid handrails are not connected together and 550 mm when they are connected together.

The maximum distance between the stanchion and other structural members is not to exceed 200 mm where the top and mid handrails are not connected together and 300 mm when they are connected together.

When the top and mid handrails are connected by a bent rail, the outside radius of the bent part is not to exceed 100 mm (see Figure below).

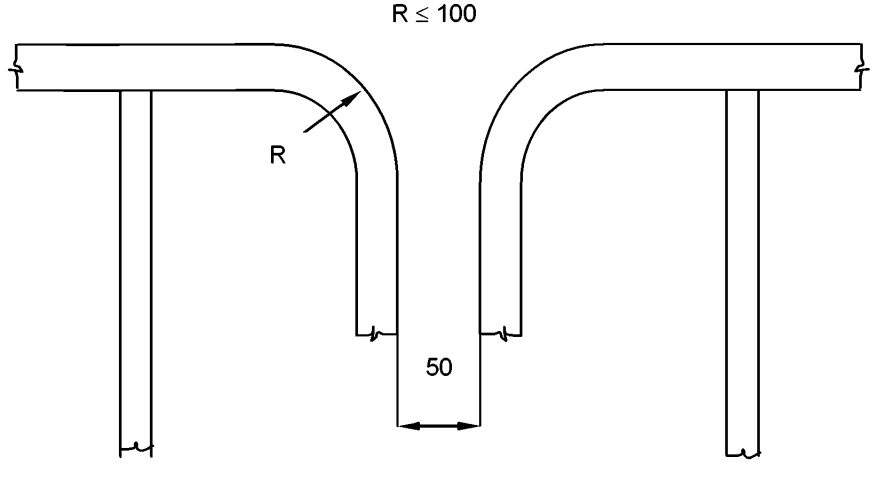

**SC 191 (cont)**

4. Non-skid construction is such that the surface on which personnel walks provides sufficient friction to the sole of boots even if the surface is wet and covered with thin sediment.

5. "Substantial construction" is taken to refer to the as-designed strength as well as the residual strength during the service life of the vessel. Durability of passageways together with guard rails is to be ensured by the initial corrosion protection and inspection and maintenance during services.

6. For guard rails, use of alternative materials such as GRP is to be subject to compatibility with the liquid carried in the tank. Non-fire resistant materials are not to be used for means of access to a space with a view to securing an escape route at a high temperature.

7. Requirements for resting platforms placed between ladders are equivalent to those applicable to elevated passageways.

**Ref.**

Paragraph 10 of Annex to MSC/Circ.686

**SC 191 (cont)**

**Technical Provision, resolution MSC.158(78), paragraph 3.4**

3.4 Access to permanent means of access and vertical openings from the ship's bottom shall be provided by means of easily accessible passageways, ladders or treads. Treads shall be provided with lateral support for the foot. Where the rungs of ladders are fitted against a vertical surface, the distance from the centre of the rungs to the surface shall be at least 150 mm. Where vertical manholes are fitted higher than 600 mm above the walking level, access shall be facilitated by means of treads and hand grips with platform landings on both sides.

**Interpretation**

Where the vertical manhole is at a height of more than 600 mm above the walking level, it shall be demonstrated that an injured person can be easily evacuated.

**SC 191 (cont)**

**Technical Provision, resolution MSC.158(78), paragraph 3.5**

3.5 Permanent inclined ladders shall be inclined at an angle of less than 70º. There shall be no obstructions within 750 mm of the face of the inclined ladder, except that in way of an opening this clearance may be reduced to 600 mm. Resting platforms of adequate dimensions shall be provided normally at a maximum of 6 m vertical height. Ladders and handrails shall be constructed of steel or equivalent material of adequate strength and stiffness and securely attached to the structure by stays. The method of support and length of stay shall be such that vibration is reduced to a practical minimum. In cargo holds, ladders shall be designed and arranged so that the risk of damage from cargo handling gear is minimized.

***MA for access to ballast tanks, cargo tanks and spaces other than fore peak tanks:***

**For oil tankers:**

1. Tanks and subdivisions of tanks having a length of 35 m or more with two access hatchways:

First access hatchway: Inclined ladder or ladders are to be used.

Second access hatchway:

i. A vertical ladder may be used. In such a case where the vertical distance is more than 6 m, vertical ladders are to comprise one or more ladder linking platforms spaced not more than 6 m apart vertically and displaced to one side of the ladder.

The uppermost section of the vertical ladder, measured clear of the overhead obstructions in way of the tank entrance, is not to be less than 2.5 m but not exceed 3.0 m and is to comprise a ladder linking platform which is to be displaced to one side of a vertical ladder. However, the vertical distance of the upper most section of the vertical ladder may be reduced to 1.6 m, measured clear of the overhead obstructions in way of the tank entrance, if the ladder lands on a longitudinal or athwartship permanent means of access fitted within that range. Adjacent sections of the ladder are to be laterally offset from each other by at least the width of the ladder (see paragraph 20 of MSC/Circ.686 and refer to the interpretation of Technical Provision, resolution MSC.158(78), paragraph 3.13.2 and paragraph 3.13.6); or

ii. Where an inclined ladder or combination of ladders is used for access to the space, the uppermost section of the ladder, measured clear of the overhead obstructions in way of the tank entrance, is to be vertical for not less than 2.5 m but not exceed 3.0m and is to comprise a landing platform continuing with an inclined ladder. However, the vertical distance of the upper most section of the vertical ladder may be reduced to 1.6 m, measured clear of the overhead obstructions in way of the tank entrance, if the ladder lands on a longitudinal or athwartship permanent means of access fitted within that range. The flights of the inclined ladders are normally to be not more than 6 m in vertical height. The lowermost section of the ladders may be vertical for the vertical distance not exceeding 2.5 m.

2. Tanks less than 35 m in length and served by one access hatchway an inclined ladder or combination of ladders are to be used to the space as specified in 1.ii above.

3. In spaces of less than 2.5 m width the access to the space may be by means of vertical ladders that comprises one or more ladder linking platforms spaced not more than 6 m apart vertically and displaced to one side of the ladder. The uppermost section of the vertical ladder, measured clear of the overhead obstructions in way of the tank

**SC 191 (cont)**

entrance, is not to be less than 2.5 m but not exceed 3.0 m and is to comprise a ladder linking platform which is to be displaced to one side of a vertical ladder. However, the vertical distance of the upper most section of the vertical ladder may be reduced to 1.6 m, measured clear of the overhead obstructions in way of the tank entrance, if the ladder lands on a longitudinal or athwartship permanent means of access fitted within that range. Adjacent sections of the ladder are to be laterally offset from each other by at least the width of the ladder (see paragraph 20 of MSC/Circ.686 and refer to the interpretation of Technical Provision, resolution MSC.158(78), paragraph 3.13.2 and paragraph 3.13.6).

4. Access from deck to a double bottom space may be by means of vertical ladders through a trunk. The vertical distance from deck to a resting platform, between resting platforms or a resting platform and the tank bottom is not to be more than 6 m unless otherwise approved by the Administration.

***MA for inspection of the vertical structure of oil tankers:***

Vertical ladders provided for means of access to the space may be used for access for inspection of the vertical structure.

Unless stated otherwise in Table 1 of TP, vertical ladders that are fitted on vertical structures for inspection are to comprise one or more ladder linking platforms spaced not more than 6 m apart vertically and displace to one side of the ladder. Adjacent sections of ladder are to be laterally offset from each other by at least the width of the ladder (paragraph 20 of MSC/Circ.686 and refer to the interpretation of Technical Provision, resolution MSC.158(78), paragraph 3.13.2 and paragraph 3.13.6).

***Obstruction distances***

The minimum distance between the inclined ladder face and obstructions, i.e. 750 mm and, in way of openings, 600 mm specified in TP 3.5 is to be measured perpendicular to the face of the ladder.

**Technical Background**

It is a common practice to use a vertical ladder from deck to the first landing to clear overhead obstructions before continuing to an inclined ladder or a vertical ladder displaced to one side of the first vertical ladder.

**Ref.**

For vertical ladders: Paragraph 20 of the annex to MSC/Circ.686.

**SC 191 (cont)**

**Technical Provision, resolution MSC.158(78), paragraph 3.6**

3.6 The width of inclined ladders between stringers shall not be less than 400 mm. The treads shall be equally spaced at a distance apart, measured vertically, of between 200 mm and 300 mm. When steel is used, the treads shall be formed of two square bars of not less than 22 mm by 22 mm in section, fitted to form a horizontal step with the edges pointing upward. The treads shall be carried through the side stringers and attached thereto by double continuous welding. All inclined ladders shall be provided with handrails of substantial construction on both sides fitted at a convenient distance above the treads.

**Interpretation**

1. Vertical height of handrails is not to be less than 890 mm from the center of the step and two course handrails need only be provided where the gap between stringer and top handrail is greater than 500 mm.

2. The requirement of two square bars for treads specified in TP, paragraph 3.6, is based upon the specification of construction of ladders in paragraph 3(e) of Annex 1 to resolution A.272(VIII), which addresses inclined ladders. TP, paragraph 3.4, allows for single rungs fitted to vertical surfaces, which is considered for a safe grip. For vertical ladders, when steel is used, the rungs are to be formed of single square bars of not less than 22 mm by 22 mm for the sake of safe grip.

3. The width of inclined ladders for access to a cargo hold is to be at least 450 mm to comply with the Australian AMSA Marine Orders Part 32, Appendix 17.

4. The width of inclined ladders other than an access to a cargo hold is to be not less than 400 mm.

5. The minimum width of vertical ladders is to be 350 mm and the vertical distance between the rungs is to be equal and is to be between 250 mm and 350 mm.

6. A minimum climbing clearance in width is to be 600 mm other than the ladders placed between the hold frames.

7. The vertical ladders are to be secured at intervals not exceeding 2.5 m apart to prevent vibration.

**Technical Background**

- TP, paragraph 3.6, is a continuation of TP, paragraph 3.5, which addresses inclined ladders. Interpretations for vertical ladders are needed based upon the current standards of IMO, AMSA or the industry.

- Interpretations 2 and 5 address vertical ladders based upon the current standards.

- Double square bars for treads become too large for a grip for vertical ladders and single rungs facilitate a safe grip.

- Interpretation 7 is introduced consistently with the requirement and the interpretation of TP, paragraph 3.4.

**SC 191 (cont)**

**Ref.**

- Annex 1 to resolution A.272(VIII).
- Australian AMSA Marine Orders Part 32, Appendix 17.
- ILO Code of Practice "Safety and Health in Dockwork" – Section 3.6 Access to Ship's Holds.

**SC 191 (cont)**

**Technical Provision, resolution MSC.158(78), paragraph 3.9.6**

3.9.6 Portable ladders more than 5 m long may only be utilized if fitted with a mechanical device to secure the upper end of the ladder.

**Interpretation**

A mechanical device such as hooks for securing at the upper end of a ladder is to be considered as an appropriate securing device if a movement fore/aft and sideways can be prevented at the upper end of the ladder.

**Technical Background**

Innovative design is to be accepted if it fits the functional requirement with due consideration for safe use.

**SC 191 (cont)**

**Technical Provision, resolution MSC.158(78), paragraph 3.10 and 3.11**

3.10 For access through horizontal openings, hatches or manholes, the minimum clear opening shall not be less than 600 mm x 600 mm. When access to a cargo hold is arranged through the cargo hatch, the top of the ladder shall be placed as close as possible to the hatch coaming. Access hatch coamings having a height greater than 900 mm shall also have steps on the outside in conjunction with the ladder.

3.11 For access through vertical openings, or manholes, in swash bulkheads, floors, girders and web frames providing passage through the length and breadth of the space, the minimum opening shall be not less than 600 mm x 800 mm at a height of not more than 600 mm from the passage unless gratings or other foot holds are provided.

**Interpretation**

See interpretation for paragraphs 5.1 and 5.2 of SOLAS regulation II-1/3-6.

**SC 191 (cont)**

**Technical Provision, resolution MSC.158(78), paragraph 3.13.1**

3.13. For bulk carriers, access ladders to a cargo hold shall be:

.1 where the vertical distance between the upper surface of adjacent decks or between deck and the bottom of the cargo space is not more than 6 m, either a vertical ladder or an inclined ladder; and

**Interpretation**

Either a vertical or an inclined ladder or a combination of them may be used for access to a cargo hold where the vertical distance is 6 m or less from the deck to the bottom of the cargo hold.

**SC 191 (cont)**

**Technical Provision, resolution MSC.158(78), paragraph 3.13.2 and paragraph 3.13.6**

3.13. For bulk carriers, access ladders to a cargo hold shall be:

.1 ....omissis.....

.2 Where the vertical distance between the upper surface of adjacent decks or between deck and the bottom of the cargo space is more than 6 m, an inclined ladder or series of inclined ladders at one end of the cargo hold, except the uppermost 2.5 m of a cargo space measured clear of overhead obstructions and the lowest 6 m may have vertical ladders, provided that the vertical extent of the inclined ladder or ladders connecting the vertical ladders is not less than 2.5 m.

The second means of access at the other end of the cargo hold may be formed of a series of staggered vertical ladders, which should comprise of one or more ladder linking platforms spaced not more than 6 m apart vertically and displaced to one side of the ladder. Adjacent sections of ladder should be laterally offset from each other by at least the width of the ladder. The uppermost entrance section of the ladder directly exposed to a cargo hold should be vertical for a distance of 2.5 m measured clear of overhead obstructions and connected to a ladder-linking platform.

.3 ....omissis.....

.4 ....omissis.....

.5 ....omissis.....

.6 In double-side skin spaces of less than 2.5 m width, the access to the space may be by means of vertical ladders that comprise of one or more ladder linking platforms spaced mnot more than 6 m apart vertically and displaced to one side of the ladder. Adjacent sections of ladder should be laterally offset from each other by at least the width of the ladder.

. 7 ....omissis.....

**Interpretation**

Adjacent sections of vertical ladder need to be installed so that the following provisions are complied with:

- the minimum “lateral offset”. between two adjacent sections of vertical ladder, is the distance between the sections, upper and lower, so that the adjacent stringers are spaced of at least 200 mm, measured from half thickness of each stringer.

- adjacent sections of vertical ladder shall be installed so that the upper end of the lower section is vertically overlapped, in respect to the lower end of the upper section, to a height of 1500 mm in order to permit a safe transfer between ladders.

- no section of the access ladder shall be terminated directly or partly above an access opening.

**Technical Background**

The aims of the above are to:

**SC 191 (cont)**

a. Reduce the risk of accidents due to tiredness by providing a rest platform at appropriate intervals.

b. Reduce the risk of collateral injury from falling or dropping items of equipment by preventing the lateral overlap of two ladders.

**SC 191 (cont)**

**Figure "A"**
**Vertical Ladder – Ladder through the linking platform**

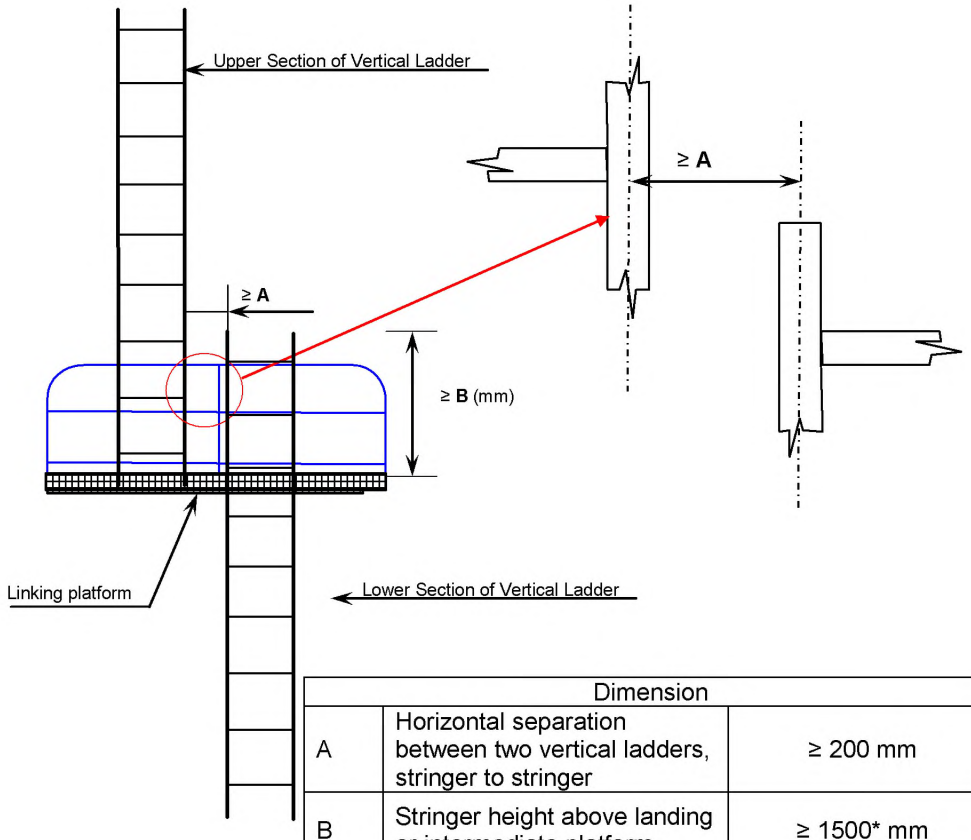


| Dimension | | |
|---|---|---|
| A | Horizontal separation between two vertical ladders, stringer to stringer | ≥ 200 mm |
| B | Stringer height above landing or intermediate platform | ≥ 1500* mm |
| C | Horizontal separation between ladder and platform | 100 mm ≤C< 300 mm |
| *Note: the minimum height of the handrail ~~stanchions~~ of resting platform is of 1000 mm (Technical Provision, resolution MSC.158(78), paragraph 3.3) | | |

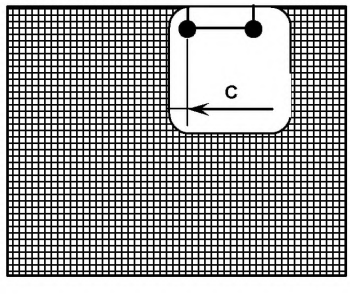

**SC 191 (cont)**

**Figure "B"**
**Vertical Ladder – Side mount**

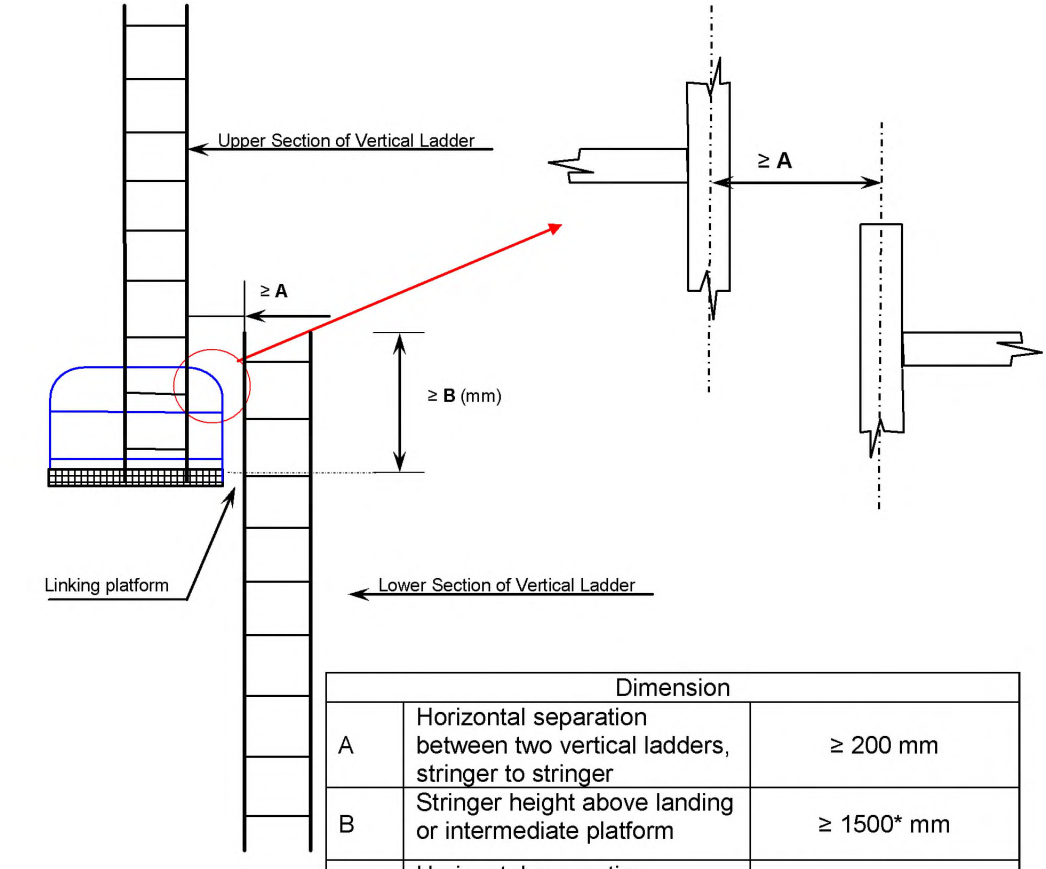


| Dimension | | |
|---|---|---|
| A | Horizontal separation between two vertical ladders, stringer to stringer | ≥ 200 mm |
| B | Stringer height above landing or intermediate platform | ≥ 1500* mm |
| C | Horizontal separation between ladder and platform | 100 mm ≤C< 300 mm |
| *Note: the minimum height of the handrail ~~stanchions~~ of resting platform is of 1000 mm (Technical Provision, resolution MSC.158(78), paragraph 3.3) | | |

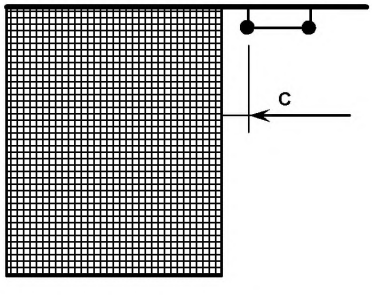

**SC 191 (cont)**

**Technical Provision, resolution MSC.158(78), paragraph 3.14**

3.14 The uppermost entrance section from deck of the vertical ladder providing access to a tank should be vertical for a distance of 2.5 m measured clear of overhead obstructions and comprise a ladder linking platform, displaced to one side of a vertical ladder. The vertical ladder can be between 1.6 m and 3 m below deck structure if it lands on a longitudinal or athwartship permanent means of access fitted within that range.

**Interpretation**

Deck is defined as "weather deck".

**SC 191 (cont)**

**Table 1 – Means of access for oil tankers, resolution MSC.158(78), paragraph 1.1**

**1 Water ballast tanks, except those specified in the right column, and cargo oil tanks**

**Access to overhead structure**

1.1 For tanks of which the height is 6 m and over containing internal structures, permanent means of access shall be provided in accordance with .1 to .6:

**Interpretation**

1. Sub-paragraphs .1, .2 and .3 define access to underdeck structure, access to the uppermost sections of transverse webs and connection between these structures.

2. Sub-paragraphs .4, .5 and .6 define access to vertical structures only and are linked to the presence of transverse webs on longitudinal bulkheads.

3. If there are no underdeck structures (deck longitudinals and deck transverses) but there are vertical structures in the cargo tank supporting transverse and longitudinal bulkheads, access in accordance with sub-paragraphs from .1 through to .6 is to be provided for inspection of the upper parts of vertical structure on transverse and longitudinal bulkheads.

4. If there is no structure in the cargo tank, section 1.1 of Table 1 is not to be applied.

5. Section 1 of Table 1 is also to be applied to void spaces in cargo area, comparable in volume to spaces covered by the regulation II-1/3-6, except those spaces covered by Section 2.

6. The vertical distance below the overhead structure is to be measured from the underside of the main deck plating to the top of the platform of the means of access at a given location.

7. The height of the tank is to be measured at each tank. For a tank the height of which varies at different bays, item 1.1 is to be applied to such bays of a tank that have height 6 m and over.

**Technical Background**

Interpretation 7: If the height of the tank is increasing along the length of a ship the permanent means of access is to be provided locally where the height is above 6 m.

**Ref.**

Paragraph 10 of the annex to MSC/Circ.686.

**SC 191 (cont)**

**Table 1 – Means of access for oil tankers, resolution MSC.158(78), paragraph 1.1.2**

1.1.2 at least one continuous longitudinal permanent means of access at each side of the tank. One of these accesses shall be at a minimum of 1.6 m to a maximum of 6 m below the deck head and the other shall be at a minimum of 1.6 m to a maximum of 3 m below the deck head;

**Interpretation**

There is need to provide continuous longitudinal permanent means of access when the deck longitudinals and deck transverses are fitted on deck but supporting brackets are fitted under the deck.

**SC 191 (cont)**

**Table 1 – Means of access for oil tankers, resolution MSC.158(78), paragraph 1.1.3**

1.1.3 access between the arrangements specified in .1 and .2 and from the main deck to either .1 or .2.

**Interpretation**

Means of access to tanks may be used for access to the permanent means of access for inspection.

**Technical Background**

As a matter of principle, in such a case where the means of access can be utilised for the purpose of accessing structural members for inspection there is no need of duplicated installation of the MA.

SC 191 (cont)

**Table 1 – Means of access for oil tankers, resolution MSC.158(78), paragraph 1.1.4**

1.1.4 continuous longitudinal permanent means of access which are integrated in the structural member on the stiffened surface of a longitudinal bulkhead, in alignment, where possible, with horizontal girders of transverse bulkheads are to be provided for access to the transverse webs unless permanent fittings are installed at the uppermost platform for use of alternative means as defined in paragraph 3.9 of the Technical provisions for inspection at intermediate heights;

**Interpretation**

The permanent fittings required to serve alternative means of access such as wire lift platform, that are to be used by crew and surveyors for inspection shall provide at least an equal level of safety as the permanent means of access stated by the same paragraph. These means of access shall be carried on board the ship and be readily available for use without filling of water in the tank.

Therefore, rafting is not to be acceptable under this provision.

Alternative means of access are to be part of Access Manual which is to be approved on behalf of the flag State.

For water ballast tanks of 5 m or more in width, such as on an ore carrier, side shell plating shall be considered in the same way as "longitudinal bulkhead".

**SC 191 (cont)**

**Table 1 – Means of access for oil tankers, resolution MSC.158(78), paragraph 2.1**

**2 Water ballast wing tanks of less than 5 m width forming double side spaces and their bilge hopper sections**

***Access to the underdeck structure***

2.1 For double side spaces above the upper knuckle point of the bilge hopper sections, permanent means of access are to be provided in accordance with .1 and .2:

**Interpretation**

Section 2 of Table 1 is also to be applied to wing tanks designed as void spaces.

Paragraph 2.1.1 represents requirements for access to underdeck structures, while paragraph 2.1.2 is a requirement for access for survey and inspection of vertical structures on longitudinal bulkheads (transverse webs).

**Technical Background**

Regulation II-1/3-6.2.1 requires each space to be provided with means of access. Though void spaces are not addressed in the technical provisions contained in resolution MSC.158(78) it is arguable whether MA is not required in void spaces. MA or portable means of access are necessary arrangement to facilitate inspection of the structural condition of the space and the boundary structure. Therefore the requirements of Section 2 of Table 1 is to be applied to double hull spaces even designed as void spaces.

**SC 191 (cont)**

**Table 1 – Means of access for oil tankers, resolution MSC.158(78), paragraph 2.1.1**

**2. Wing water ballast tanks less than 5 m width forming double side spaces and their bilge hopper sections**

***Access to the underdeck structure***

2.1.1 Where the vertical distance between horizontal uppermost stringer and deck head is 6 m or more, one continuous permanent means of access shall be provided for the full length of the tank with a means to allow passing through transverse webs installed a minimum of 1.6 m to a maximum of 3 m below the deck head with a vertical access ladder at each end of tank;

**Interpretation**

1. For a tank, the vertical distance between horizontal upper stringer and deck head of which varies at different sections, item 2.1.1 is to be applied to such sections that falls under the criteria.

2. The continuous permanent means of access may be a wide longitudinal, which provides access to critical details on the opposite side by means of platforms as necessary on web frames. In case the vertical opening of the web frame is located in way of the open part between the wide longitudinal and the longitudinal on the opposite side, platforms shall be provided on both sides of the web frames to allow safe passage through the web frame.

3. Where two access hatches are required by SOLAS regulation II-1/3-6.3.2, access ladders at each end of the tank are to lead to the deck.

**Technical Background**

Interpretation 1: The interpretation of varied tank height in item 1 of Table 1 is applied to the vertical distance between horizontal upper stringer and deck head for consistency.

**SC 191 (cont)**

**Table 1 – Means of access for oil tankers, resolution MSC.158(78), paragraph 2.1.2**

2.1.2 continuous longitudinal permanent means of access, which are integrated in the structure, at a vertical distance not exceeding 6 m apart; and

**Interpretation**

The continuous permanent means of access may be a wide longitudinal, which provides access to critical details on the opposite side by means of platforms as necessary on webframes. In case the vertical opening of the web is located in way of the open part between the wide longitudinal and the longitudinal on the opposite side, platforms shall be provided on both sides of the web to allow safe passage through the web.

A "reasonable deviation", as noted in TP, paragraph 1.4, of not more than 10% may be applied where the permanent means of access is integral with the structure itself.

**SC 191 (cont)**

**Table 1 – Means of access for oil tankers, resolution MSC.158(78), paragraph 2.2**

2.2 For bilge hopper sections of which the vertical distance from the tank bottom to the upper knuckle point is 6 m and over, one longitudinal permanent means of access shall be provided for the full length of the tank. It shall be accessible by vertical permanent means of access at both ends of the tank.

**Interpretation**

1. Permanent means of access between the longitudinal continuous permanent means of access and the bottom of the space is to be provided.

2. The height of a bilge hopper tank located outside of the parallel part of vessel is to be taken as the maximum of the clear vertical distance measured from the bottom plating to the hopper plating of the tank.

3. The foremost and aftmost bilge hopper ballast tanks with raised bottom, of which the height is 6 m and over, a combination of transverse and vertical MA for access to the upper knuckle point for each transverse web is to be accepted in place of the longitudinal permanent means of access.

**Technical Background**

Interpretation 2: The bilge hopper tanks at fore and aft of cargo area narrow due to raised bottom plating and the actual vertical distance from the bottom of the tank to hopper plating of the tank is more appropriate to judge if a portable means of access could be utilized for the purpose.

Interpretation 3: in the foremost or aftmost bilge hopper tanks where the vertical distance is 6 m or over but installation of longitudinal permanent means of access is not practicable permanent means of access of combination of transverse and vertical ladders provides an alternative means of access to the upper knuckle point.

**SC 191 (cont)**

**Table 2 – Means of access for bulk carriers, resolution MSC.158(78), paragraph 1.1**

**1 Cargo holds**

***Access to underdeck structure***

1.1 Permanent means of access shall be fitted to provide access to the overhead structure at both sides of the cross deck and in the vicinity of the centreline. Each means of access shall be accessible from the cargo hold access or directly from the main deck and installed at a minimum of 1.6 m to a maximum of 3 m below the deck.

**Interpretation**

1. Means of access shall be provided to the crossdeck structures of the foremost and aftermost part of the each cargo hold.

2. Interconnected means of access under the cross deck for access to three locations at both sides and in the vicinity of the centerline is to be acceptable as the three means of access.

3. Permanent means of access fitted at three separate locations accessible independently, one at each side and one in the vicinity of the centerline is to be acceptable.

4. Special attention is to be paid to the structural strength where any access opening is provided in the main deck or cross deck.

5. The requirements for bulk carrier cross deck structure is also to be considered applicable to ore carriers.

**Technical Background**

Pragmatic arrangements of the MA are provided.

**SC 191 (cont)**

**Table 2 – Means of access for bulk carriers, resolution MSC.158(78), paragraph 1.3**

1.3 Access to the permanent means of access to overhead structure of the cross deck may also be via the upper stool.

**Interpretation**

Particular attention is to be paid to preserve the structural strength in way of access opening provided in the main deck or cross deck.

**SC 191 (cont)**

**Table 2 – Means of access for bulk carriers, resolution MSC.158(78), paragraph 1.4**

1.4 Ships having transverse bulkheads with full upper stools with access from the main deck which allows monitoring of all framing and plates from inside, do not require permanent means of access of the cross deck.

**Interpretation**

"Full upper stools" are understood to be stools with a full extension between top side tanks and between hatch end beams.

**SC 191 (cont)**

**Table 2 – Means of access for bulk carriers, resolution MSC.158(78), paragraph 1.5**

1.5 Alternatively, movable means of access may be utilized for access to the overhead structure of cross deck if its vertical distance is 17 m or less above the tank top.

**Interpretation**

1. The movable means of access to the underdeck structure of cross deck need not necessarily be carried on board the vessel. It is sufficient if it is made available when needed.

2. The requirements for bulk carrier cross deck structure is also to be considered applicable to ore carriers.

**SC 191 (cont)**

**Table 2 – Means of access for bulk carriers, resolution MSC.158(78), paragraph 1.6**

***Access to vertical structures***

1.6 Permanent means of vertical access shall be provided in all cargo holds and built into the structure to allow for an inspection of a minimum of 25 % of the total number of hold frames port and starboard equally distributed throughout the hold including at each end in way of transverse bulkheads. But in no circumstance shall this arrangement be less than 3 permanent means of vertical access fitted to each side (fore and aft ends of hold and mid-span). Permanent means of vertical access fitted between two adjacent hold frames is counted for an access for the inspection of both hold frames. A means of portable access may be used to gain access over the sloping plating of lower hopper ballast tanks.

**Interpretation**

The maximum vertical distance of the rungs of vertical ladders for access to hold frames is to be 350 mm.

If safety harness is to be used, means are to be provided for connecting the safety harness in suitable places in a practical way.

**Technical Background**

The maximum vertical distance of the rungs of 350 mm is applied with a view to reducing trapping cargoes.

**SC 191 (cont)**

**Table 2 – Means of access for bulk carriers, resolution MSC.158(78), paragraph 1.7**

1.7 In addition, portable or movable means of access shall be utilized for access to the remaining hold frames up to their upper brackets and transverse bulkheads.

**Interpretation**

Portable, movable or alternative means of access also is to be applied to corrugated bulkheads.

**SC 191 (cont)**

**Table 2 – Means of access for bulk carriers, resolution MSC.158(78), paragraph 1.8**

1.8 Portable or movable means of access may be utilized for access to hold frames up to their upper bracket in place of the permanent means required in 1.6. These means of access shall be carried on board the ship and readily available for use.

**Interpretation**

Readily available means;-

Able to be transported to location in cargo hold and safely erected by ship's staff.

**SC 191 (cont)**

**Table 2 – Means of access for bulk carriers, resolution MSC.158(78), paragraph 2.3**

2.3 Three permanent means of access, fitted at the end bay and middle bay of each tank, shall be provided spanning from tank base up to the intersection of the sloping plate with the hatch side girder. The existing longitudinal structure may be used as part of this means of access.

**Interpretation**

If the longitudinal structures on the sloping plate are fitted outside of the tank a means of access is to be provided.

**SC 191 (cont)**

**Table 2 – Means of access for bulk carriers, resolution MSC.158(78), paragraph 2.5**

***Bilge hopper tanks***

2.5 For each bilge hopper tank of which the height is 6 m and over, one longitudinal continuous permanent means of access shall be provided along the side shell webs and installed at a minimum of 1.2 m below the top of the clear opening of the web ring with a vertical access ladder in the vicinity of each access to the tank.

**Interpretation**

1. The height of a bilge hopper tank located outside of the parallel part of vessel is to be taken as the maximum of the clear vertical height measured from the bottom plating to the hopper plating of the tank.

2. It is to be demonstrated that portable means for inspection can deployed and made readily available in the areas where needed.

**SC 191 (cont)**

**Table 2 – Means of access for bulk carriers, resolution MSC.158(78), paragraph 2.5.2**

***Bilge hopper tanks***

2.5.2 Alternatively, the longitudinal continuous permanent means of access can be located through the upper web plating above the clear opening of the web ring, at a minimum of 1.6 m below the deck head, when this arrangement facilitates more suitable inspection of identified structurally critical areas. An enlarged longitudinal frame can be used for the purpose of the walkway.

**Interpretation**

A wide longitudinal frame of at least 600 mm clear width may be used for the purpose of the longitudinal continuous permanent means of access. The foremost and aftermost bilge hopper ballast tanks with raised bottom, of which the height is 6 m and over, a combination of transverse and vertical MA for access to the sloping plate of hopper tank connection with side shell plating for each transverse web can be accepted in place of the longitudinal permanent means of access.

**SC 191 (cont)**

**Table 2 – Means of access for bulk carriers, resolution MSC.158(78), paragraph 2.6**

2.6 If no access holes are provided through the transverse ring webs within 600 mm of the tank base and the web frame rings have a web height greater than 1 m in way of side shell and sloping plating, then step rungs/grab rails shall be provided to allow safe access over each transverse web frame ring.

**Interpretation**

The height of web frame rings is to be measured in way of side shell and tank base.

**Technical Background**

In the bilge hopper tank the sloping plating is above the opening, while the movement of the surveyor is along the bottom of the tank. Therefore the measurement of 1 m is to be taken from the bottom of the tank.

End of Document

SC 226 (Nov 2008) (Rev.1 Dec 2012)

# IACS Unified Interpretations (UI) ~~for~~ on the application of SOLAS regulations to conversions of Single-Hull Oil Tankers to Double-Hull Oil Tankers or Bulk Carriers ~~Single Hull Tanker to Double Hull Tanker or Bulk Carrier/Ore Carrier~~

Reference table of the clarification of the applicability of SOLAS regulations

| No. | Reg. | Title/Content | Note |
|---|---|---|---|
| 1 | II-1/1.3 | Alterations and modifications of a major character | As amended by MSC.216(82) |
| 2 | II-1/3.2, 2 & 3.2, 4 | Protective coatings of dedicated seawater ballast tanks in all types of ships and double-side skin spaces of bulk carriers | As amended by MSC.216(82) |
| 3 | II-1/3-6 | Access to and within spaces in, and forward of, the cargo area of oil tankers and bulk carriers | As amended by MSC.194(80) |
| 4 | II-1/3-8 | Towing and Mooring Equipment | As amended by MSC.194(80) |
| 5 | II-1/Part B & Part B-1 | ~~Part B:~~ Subdivision and stability ~~Part B-1: Stability~~ | As amended by MSC.216(82) |
| 6 | II-2/1.3 | Repairs, alterations, modifications and outfitting | |
| 7 | III/1.4.2 | Alterations and modifications of a major character | |
| 8 | III/31.1.8 | Survival craft and rescue boats ~~Free fall lifeboats~~ | |
| 9 | V/22 | Navigation bridge visibility | |
| 10 | XII/4 | Damage stability requirements applicable to bulk carriers | |
| ~~11~~ | XII/5.1 & 5.2 | Structural strength of bulk carriers | |
| ~~12~~ | XII/6.1 | Structural and other requirements for bulk carriers | |
| ~~13~~ | XII/6.2 | Structural and other requirements for bulk carriers | |
| ~~14~~ | XII/6.3 | Structural and other requirements for bulk carriers | As amended by MSC.216(82) Annex 1 |
| ~~15~~ | XII/6.4 | Structural and other requirements for bulk carriers | As amended by MSC.216(82) Annex 1 |
| ~~16~~ | XII/7.1 | Survey and maintenance of bulk carrier | |
| ~~17~~ | XII/7.2 | Survey and maintenance of bulk carrier | |
| ~~18~~ | XII/8 | Information on compliance with requirements for bulk carriers | |
| ~~19~~ | XII/9 | Requirements for bulk carriers not being capable of complying with regulation 4.3 due to the design configuration of their cargo holds | |
| ~~20~~ | XII/10 | Solid bulk cargo density declaration | |
| ~~21~~ | XII/11 | Loading instrument | |
| ~~22~~ | XII/12 | Hold, ballast and dry space water ingress alarms | |
| ~~23~~ | XII/13 | Availability of pumping systems | |
| ~~24~~ | XII/14 | Restrictions from sailing with any hold empty | |

Note:

SC 226 (cont)

1. This UI is to be applied by IACS ~~Members and Associates~~Societies when acting as recognized organizations, authorized by flag State Administrations to act on their behalf, unless otherwise advised, from ~~1 January 2009~~1 January 2014.

SC 226 (cont)

## SC226.1 Alterations and modifications of a major character SOLAS Chapter II-1 Reg. 1.3 (as amended by MSC.216(82))

SOLAS Chapter II-1, Reg. 1 'Application':

*"3 All ships which undergo repairs, alterations, modifications and outfitting related thereto shall continue to comply with at least the requirements previously applicable to these ships. Such ships, if constructed before the date on which any relevant amendments enter into force, shall, as a rule, comply with the requirements for ships constructed on or after that date to at least the same extent as they did before undergoing such repairs, alterations, modifications or outfitting. Repairs, alterations and modifications of a major character and outfitting related thereto shall meet the requirements for ships constructed on or after the date on which any relevant amendments enter into force, in so far as the Administration deems reasonable and practicable."*

### Interpretation

1. The date on which a conversion occurs for the purposes of determining the applicability of requirements for ships constructed on or after the date on which any relevant amendments enters into force is to be:

   .1 the date on which the contract is placed for the conversion; or

   .2 in the absence of a contract, the date on which the work identifiable with the specific conversion begins; or

   .3 the completion date of the conversion, if that occurs more than three years after the date specified in subparagraph .1 above or 30 months after the date specified in subparagraph .2 above, either as applicable.

2 As for paragraph 1 above, the following applies:

   .1 Where the completion date of the conversion has been subject to delay beyond the period referred to in paragraph 1.3 above due to unforeseen circumstances beyond the control of the builder and the owner, the date on which contract is placed for the conversion or, if applicable, the date on which the work identifiable with the specific conversion begins may be accepted by the Administration in lieu of the completion date of the conversion. The treatment of such ships is to be considered by the Administration on a case-by-case basis, bearing in mind the particular circumstances.

   .2 It is important that ships accepted by the Administration under the provisions of subparagraph .1 above are also to be accepted as such by port States. In order to ensure this, the following practice is recommended to Administrations when considering an application for such a ship:

      .1 the Administration should thoroughly consider applications on a case-by-case basis, bearing in mind the particular circumstances. In doing so in the case of a ship converted in a foreign country, the Administration may require a formal report from the authorities of the country in which the ship was converted, stating that the delay was due to unforeseen circumstances beyond the control of the builder and the owner;

SC 226 (cont)

.2 when a ship is accepted by the Administration under the provisions of subparagraph .1 above, information on the conversion date annotated on the relevant certificates is to be footnoted to indicate that the ship is accepted by the Administration under the unforeseen delay in completion of the conversion provisions of this interpretation; and

.3 the Administration should report to the Organization on the identity of the ship and the grounds on which the ship has been accepted under the unforeseen delay in the completion of the conversion provisions of this interpretation.

~~The date on which such a modification occurs for purposes of determining the applicability of requirements for ships constructed on or after the date on which any relevant amendments enter into force shall be:~~

~~– the date on which the contract is placed for the conversion; or~~

~~– in the absence of a contract, the date on which the work identifiable with the specific conversion begins.~~

For conversions of single-hull oil tankers to double-hull oil tankers or bulk carriers, the following is to apply:

.1 Conversions of single-hull oil tankers to double-hull oil tankers or bulk carriers is to be regarded as modifications of a major character for the purposes of SOLAS chapter II-1.

.2 Repairs, alterations and modifications of a major character include:

.1 Substantial alteration of the dimensions of a ship, for example lengthening of a ship by adding a new midbody. The new midbody is to comply with SOLAS chapter II-1.

.2 A change of ship type, for example an oil tanker converted to a bulk carrier. Any structure, machinery and systems that are added or modified is to comply with SOLAS chapter II-1, taking into account the interpretation of SOLAS chapter II-1 regulations as contained herein.

~~• For Single Hull Tanker to Double Hull Tanker or Single Hull Tanker to Bulk Carrier/Ore Carrier~~

~~i.e.~~

~~1 Conversions of single hull tankers to double hull tankers are regarded as modifications of a major character for the purposes of SOLAS chapter II-1.~~

~~2 Repairs, alterations and modifications of a major character include:~~

~~.1 Substantial alteration of the dimensions of a ship, for example:~~

~~Lengthening of a ship by adding a new midbody. The new midbody shall comply with SOLAS chapter II-1.~~

~~.2 A change of ship type, for example:~~

SC 226 (cont)

~~A tanker converted to a bulk carrier. Any structure, machinery and systems that are added or modified shall comply with SOLAS chapter II-1 taking into account the interpretation Reg. 3-2, 2 and Reg. 3-2, 4.~~

SC 226 (cont)

## SC226.2 Protective coatings of dedicated seawater ballast tanks in all types of ships and double-side skin spaces of bulk carriers SOLAS Chapter II-1 Reg. 3-2, 2 and Reg. 3-2, 4 (as amended by MSC.216(82))

SOLAS Chapter II-1, Reg. 3-2:

*"2 All dedicated seawater ballast tanks arranged in ships and double-side skin spaces arranged in bulk carriers of 150 m in length and upwards shall be coated during construction in accordance with the Performance standard for protective coatings for dedicated seawater ballast tanks in all types of ships and double-side skin spaces of bulk carriers, adopted by the Maritime Safety Committee by resolution MSC.215(82), as may be amended by the Organization, provided that such amendments are adopted, brought into force and take effect in accordance with the provisions of article VIII of the present Convention concerning the amendment procedures applicable to the Annex other than chapter I."*

and

*"4 Maintenance of the protective coating system shall be included in the overall ship's maintenance scheme. The effectiveness of the protective coating system shall be verified during the life of a ship by the Administration or an organization recognized by the Administration, based on the guidelines developed by the Organization.*"*

### Interpretation

1. For single-hull oil tanker conversion into double-hull oil tanker, SOLAS regulation II-1/3-2 as adopted by resolution MSC.216(82) is to apply to dedicated water ballast tanks if constructed with all structural members being entirely new. If converting existing spaces into water ballast tanks with part of the existing structural members remaining in place, revised SOLAS regulation II-1/3-2 (MSC.216(82)) need not be applied. However, dedicated sea water ballast tanks are to have an efficient corrosion prevention system such as hard protective coatings or equivalent and be of light colour.

2. For single-hull oil tanker conversion into bulk carrier, SOLAS regulation II-1/3-2 as adopted by resolution MSC.216(82) is to apply to dedicated water ballast tanks and double-side skin spaces of bulk carriers if constructed with all structural members being entirely new. If converting existing spaces into dedicated water ballast tanks or double-side skin space of bulk carriers with part of the existing structural members remaining in place, revised SOLAS regulation II-1/3-2 (MSC.216(82)) need not be applied. However, dedicated sea water ballast tanks are to have an efficient corrosion prevention system such as hard protective coatings or equivalent and be of light colour.

~~• For Single-Hull Tanker to Double-Hull Tanker~~

~~SOLAS II-1/3-2 (MSC.216(82)) only applies to dedicated water ballast tanks if constructed with all structural members being entirely new. If converting existing spaces into water ballast tanks with part of the existing structural members remaining in place, revised SOLAS II-1/3-2 (MSC.216(82)) need not be applied.~~

~~• For Single-Hull Tanker to Bulk Carrier/Ore Carrier~~

SC 226 (cont)

~~SOLAS II-1/3-2 (MSC.216(82)) only applies to dedicated water ballast tanks and double-side skin space of bulk carriers if constructed with all structural members being entirely new. If converting existing spaces into dedicated water ballast tanks or double-side skin space of Bulk Carrier with part of the existing structural members remains in place, revised SOLAS II-1/3-2 (MSC.216(82)) need not be applied.~~

SC 226 (cont)

## SC226.3 Access to and within spaces in, and forward of, the cargo area of oil tankers and bulk carriers SOLAS Chapter II-1 Reg. 3-6 (as amended by MSC.194(80))

*Regulation texts are not inserted here.*

### Interpretation

1. For single-hull oil tanker conversion into double-hull oil tanker

1.1 Permanent means of access contained in table 1 of the Technical provisions for means of access for inspections (resolution MSC.158(78)) need not apply. However, if, in the course of conversion, substantial new structures are added, these new structures are to comply with the regulation.

1.2 The term "substantial new structures" means hull structures that are entirely renewed or augmented by new double bottom and/or double-side construction (e.g., replacing the entire structure within cargo area or adding a new double bottom and/or double-side section to the existing cargo area).

1.3 Additionally, an approved Ship Structure Access Manual is to be provided.

2. For single-hull oil tanker conversion into bulk carrier

2.1 Permanent means of access contained in table 2 of the Technical provisions for means of access for inspections (resolution MSC.158(78)) need not apply. However, if, in the course of conversion, substantial new structures are added, these new structures are to comply with the regulation.

2.2 The term "substantial new structures" means hull structures that are entirely renewed or augmented by new double bottom and/or double-side skin construction (e.g., replacing the entire structure within cargo area or adding a new double bottom and/or double-side section to the existing cargo area).

2.3 Additionally, an approved Ship Structure Access Manual is to be provided.

~~• For Single-Hull Tanker to Double-Hull Tanker~~

~~Permanent means of access contained in table 1 of the Technical provisions for means of access for inspections (resolution MSC.158(78)) need not apply. However, if, in the course of conversion, substantial new structures are added, these new structures shall comply with the regulation.~~

~~The term "substantial new structures" means hull structures that are entirely renewed or augmented by new double bottom and/or double side construction (e.g., replacing the entire structure within cargo area or adding a new double bottom and/or double side section to the existing cargo area).~~

~~Additionally, an approved access manual shall be provided.~~

~~• For Single-Hull Tanker to Bulk Carrier/Ore Carrier~~

~~Permanent means of access contained in table 2 of the Technical provisions for means of access for inspections (resolution MSC.158(78)) need not apply. However, if, in the course of~~

SC 226 (cont)

~~conversion, substantial new structures are added, these new structures shall comply with the regulation.~~

~~The term "substantial new structures" means hull structures that are entirely renewed or augmented by new double bottom and/or double side skin construction (e.g., replacing the entire structure within cargo area or adding a new double bottom and/or double side section to the existing cargo area).~~

~~Additionally, an approved access manual shall be provided.~~

SC 226 (cont)

## SC226.4 Towing and Mooring Equipment
## SOLAS Chapter II-1 Reg. 3-8 (as amended by MSC.194(80))

*Regulation texts are not inserted here.*

### Interpretation

For single-hull oil tanker conversion into double-hull oil tanker or bulk carrier

This regulation is to be applied when equipment and fittings for mooring/towing are replaced, modified or the safe working load of the existing equipment and fittings is known. Where the latter cannot be ascertained, alternative compliance with SOLAS regulation II-1/3-8 is to be sought (e.g., the equipment is to be replaced, tested or modified).

- ~~For Single-Hull Tanker to Double-Hull Tanker or Single-Hull Tanker to Bulk Carrier/Ore Carrier~~

~~When existing equipment or fittings are only relocated, this regulation applies only to their supporting structures.~~

~~Except where equipment and fittings for mooring/towing are totally replaced or modified, indication of Safe Work Load and provision of towing and mooring arrangements plan is not required.~~

SC 226 (cont)

SC226.5 ~~Part B: Subdivision and stability; and Part B-1: Stability~~ Subdivision and stability

SOLAS Chapter II-1 Part B and Part B-1 (as amended by MSC.216(82) ~~– to be implemented from 1 January 2009)~~

| ~~Part~~ | ~~Reg.~~ | ~~Title~~ | ~~Applicable to~~ |
|---|---|---|---|
| ~~B~~ | ~~4~~ | ~~General~~ | ~~Cargo ships and passenger ships, but shall exclude those cargo ships which are shown to comply with subdivision and damage stability regulations in other instruments developed by the IMO.~~ |
| ~~B-1~~ | ~~5~~ | ~~Intact stability information~~ | ~~Cargo ships and passenger ships~~ |
| ~~B-1~~ | ~~5-1~~ | ~~Stability information to be supplied to the master~~ | ~~Cargo ships and passenger ships~~ |
| ~~B-1~~ | ~~6~~ | ~~Required subdivision index *R*~~ | ~~Cargo ships and passenger ships~~ |
| ~~B-1~~ | ~~7~~ | ~~Attained subdivision index *A*~~ | ~~Cargo ships and passenger ships~~ |
| ~~B-1~~ | ~~7-1~~ | ~~Calculation of the factor $p_i$~~ | ~~Cargo ships and passenger ships~~ |
| ~~B-1~~ | ~~7-2~~ | ~~Calculation of the factor $s_i$~~ | ~~Cargo ships and passenger ships~~ |
| ~~B-1~~ | ~~7-3~~ | ~~Permeability~~ | ~~Cargo ships and passenger ships~~ |

*Regulation texts are not inserted here.*

Interpretation

1. For single-hull oil tanker conversion into double-hull oil tanker

Oil tankers complying with damage stability requirements contained in Annex I to MARPOL 73/78 (except for combination carriers with type B freeboards) may be excluded from the damage stability requirements contained in SOLAS chapter II-1, part B-1.

2. For single-hull oil tanker conversion into bulk carrier

2.1 A bulk carrier which is assigned a B reduced freeboard complying with damage stability requirements contained in regulation 27 of the 1966 Load Line Convention, and resolutions A.320(IX) and A.514(13); or regulation 27 of the 1988 Load Line Protocol, may be excluded from the damage stability requirements contained in SOLAS chapter II-1, part B-1.

2.2 For a bulk carrier which is assigned a B freeboard, SOLAS chapter II-1, Parts B and B-1 are to be applied.

~~• For Single Hull Tanker to Double Hull Tanker~~

~~As Oil Tankers shall comply with MARPOL Annex I Reg. 27 (intact stability) and Reg. 28 (damage stability), SOLAS Part B, B-1 may be excluded.~~

SC 226 (cont)

- ~~For Single Hull Tanker to Bulk Carrier/Ore Carrier~~

~~For Bulk Carrier/Ore Carrier which is assigned a B reduced freeboard, ICLL 1966 Reg.27 (damage stability) or ICLL Protocol 1988 Reg.27 (damage stability) is applicable. As such, SOLAS II-1 Parts B, B-1 may be excluded.~~

~~For Bulk Carrier/Ore Carrier which is assigned a B freeboard, SOLAS II-1 Part B, B-1 is applicable.~~

SC 226 (cont)

## SC226.6 Repairs, alterations, modifications and outfitting SOLAS Chapter II-2 Reg. 1.3

SOLAS Chapter II-2, Reg. 1.3 'Repairs, alterations, modifications and outfitting':

*"3.1 All ships which undergo repairs, alterations, modifications and outfitting related thereto shall continue to comply with at least the requirements previously applicable to these ships. Such ships, if constructed before 1 July 2002, shall, as a rule, comply with the requirements for ships constructed on or after that date to at least the same extent as they did before undergoing such repairs, alterations, modifications or outfitting.*

*3.2 Repairs, alterations and modifications which substantially alter the dimensions of a ship or the passenger accommodation spaces, or substantially increase a ship's service life and outfitting related thereto shall meet the requirements for ships constructed on or after 1 July 2002 in so far as the Administration deems reasonable and practicable."*

### Interpretation

~~The date on which a such a modification occurs for purposes of determining the applicability of requirements for ships constructed on or after the date on which any relevant amendments enter into force shall be:~~

- ~~the date on which the contract is placed for the conversion; or~~
- ~~in the absence of a contract, the date on which the work identifiable with the specific conversion begins.~~

For single-hull oil tanker conversion into double-hull oil tanker or bulk carrier, new and converted parts are to comply with the latest applicable requirements.

- ~~For Single-Hull Tanker to Double-Hull Tanker~~

~~New and converted parts shall comply with the latest applicable requirements.~~

- ~~For Single-Hull Tanker to Bulk Carrier/Ore Carrier~~

~~New and converted parts shall comply with the latest applicable requirements.~~

SC 226 (cont)

## SC226.7 Alterations and modifications of a major character SOLAS Chapter III Reg. 1.4.2

SOLAS Chapter III, Reg. 1 'Application':

*"4 For ships constructed before 1 July 1998, the Administration shall:*

*.1 .....; and*

*.2 ensure that when life-saving appliances or arrangements on such ships are replaced or such ships undergo repairs, alterations or modifications of a major character which involve replacement of, or any addition to, their existing life-saving appliances or arrangements, such life-saving appliances or arrangements, in so far as is reasonable and practicable, comply with the requirements of this chapter. However, if a survival craft other than an inflatable liferaft is replaced without replacing its launching appliance, or vice versa, the survival craft or launching appliance may be of the same type as that replaced."*

### Interpretation

~~The date on which a such a modification occurs for purposes of determining the applicability of requirements for ships constructed on or after the date on which any relevant amendments enter into force shall be:~~

- ~~the date on which the contract is placed for the conversion; or~~
- ~~in the absence of a contract, the date on which the work identifiable with the specific conversion begins.~~

For single-hull oil tanker conversion into double-hull oil tanker or bulk carrier, this to be considered as an alteration or modification of a major character.

- ~~For Single-Hull Tanker to Double-Hull Tanker~~

~~This shall be considered as a major conversion.~~

- ~~For Single-Hull Tanker to Bulk Carrier/Ore Carrier~~

~~This shall be considered as a major conversion.~~

SC 226 (cont)

SC226.8 Survival craft and rescue boats ~~Free-fall lifeboats~~
SOLAS Chapter III Reg. 31.1.8

SOLAS Chapter III, Reg. 31 'Survival craft and rescue boats':

*"1.2 In lieu of meeting the requirements of paragraph 1.1, cargo ships may carry:*

*.1 one or more free-fall lifeboats, complying with the requirements of section 4.7 of the Code, capable of being free-fall launched over the stern of the ship of such aggregate capacity as will accommodate the total number of persons on board; and*

*.2 in addition, one or more inflatable or rigid liferafts complying with the requirements of section 4.2 or 4.3 of the Code, on each side of the ship, of such aggregate capacity as will accommodate the total number of persons on board. The liferafts on at least one side of the ship shall be served by launching appliances."*

and

*"1.8 Notwithstanding the requirements of paragraph 1.1, bulk carriers as defined in regulation IX/1.6 constructed on or after 1 July 2006 shall comply with the requirements of paragraph 1.2."*

Interpretation

1. For single-hull oil tanker conversion into double-hull oil tanker, this regulation is not relevant.

2. For single-hull oil tanker conversion into bulk carrier, SOLAS regulation III/31.1.8 is to be met as for new ships, except where the space available for fitting and/or launching a free-fall lifeboat in accordance with regulation III/31.1.2.1 is not adequate, in which case the Administration is to be contacted to determine whether or not existing arrangement may be accepted.

~~• For Single Hull Tanker to Double Hull Tanker~~

~~Not relevant.~~

~~• For Single Hull Tanker to Bulk Carrier/Ore Carrier~~

~~Not applicable.~~

SC 226 (cont)

## SC226.9 Navigation bridge visibility
SOLAS Chapter V Reg. 22

*Regulation text is not inserted here.*

Interpretation

For single-hull oil tanker conversion into double-hull oil tanker or bulk carrier, the level of visibility possessed by the ship prior to the conversion at the ballast loading condition is to be maintained after the conversion. Where a conversion involves the modification of structural arrangements used to establish minimum bridge visibility, the provisions of SOLAS regulation V/22 is to apply.

~~For Single-Hull Tanker to Double-Hull Tanker~~

~~In ballast loading condition, the visibility standard applicable to the ship prior to conversion is acceptable as equivalent to the ballast loading condition after the conversion. Visibility forward needs to comply with if any changes are made to the fore-end structural arrangement. This need not only be related to the fitting of a full forecastle, but could also be affected by aspects such as increasing the sheer and/or step in the upper deck.~~

- ~~For Single-Hull Tanker to Bulk Carrier/Ore Carrier~~

~~In ballast loading condition, the visibility standard applicable to the ship prior to conversion is acceptable as equivalent to the ballast loading condition after the conversion. Visibility forward needs to comply with if any changes are made to the fore-end structural arrangement. This need not only be related to the fitting of a full forecastle, but could also be affected by aspects such as increasing the sheer and/or step in the upper deck.~~

SC 226 (cont)

SC226.10 Damage stability requirements applicable to bulk carriers

SOLAS regulation XII/4, structural strength of bulk carriers SOLAS regulation XII/5.1 and 5.2, structural and other requirements for bulk carriers SOLAS regulation XII/6.1, XII/6.2, XII/6.3 (MSC.216(82) Annex 1) and XII/6.4 (MSC.216(82) Annex 1), survey and maintenance of bulk carriers SOLAS regulation XII/7.1 and XII/7.2, information on compliance with requirements for bulk carriers SOLAS regulation XII/8, Requirements for bulk carriers not being capable of complying with regulation 4.3 due to the design configuration of their cargo holds SOLAS regulation XII/9, Solid bulk cargo density declaration SOLAS regulation XII/10, Loading instrument SOLAS regulation XII/11, Hold, ballast and dry space water ingress alarms SOLAS regulation XII/12, Availability of pumping systems SOLAS regulation XII/13, Restrictions from sailing with any hold empty SOLAS regulation XII/14

*Regulation texts are not inserted here.*

~~*"2 Bulk carriers of 150 m in length and upwards of double-side skin construction in which any part of longitudinal bulkhead is located within B/5 or 11.5 m, whichever is less, inboard from the ship's side at right angle to the centreline at the assigned Summer Load Line, designed to carry solid bulk cargoes having a density of 1,000 kg/m$^3$ and above, constructed on or after 1 July 2006, shall, when loaded to the Summer Load Line, be able to withstand flooding of any one cargo hold in all loading conditions and remain afloat in a satisfactory condition of equilibrium, as specified in paragraph 4."*~~

Interpretation

1. For single-hull oil tanker conversion into double-hull oil tanker, these regulations are not relevant.

2. For single-hull oil tanker conversion into bulk carrier, the provisions of chapter XII applicable for ships constructed on or after the date on which conversion occurs, are to be applied as for a new ship to the entire bulk carrier, i.e. all new and existing parts and spaces, as indicated in the table below.

Table of application of the Regulations of SOLAS Chapter XII to the conversions of Single Hull Tankers to Bulk Carriers/Ore Carriers

SC 226 (cont)

| Regulation | Applicability | Note |
|---|---|---|
| 4.1 | Apply | |
| 4.2 | Apply, based on the Unified interpretations of SOLAS regulations XII/4.2 and XII/5.2 (MSC.1/Circ.1178). | |
| 4.3 | NA | |
| 4.4 | NA | This regulation is referred to within regulations 4.1 and 4.2 |
| 4.5 | NA | |
| 4.6 | Apply | |
| 4.7 | Apply | |
| 5.1 | Apply | |
| 5.2 | Apply, based on the Unified interpretations of SOLAS regulations XII/4.2 and XII/5.2 (MSC.1/Circ.1178). | |
| 6.1 | NA | |
| 6.2 | Apply | |
| 6.3 | Apply | |
| 6.4 | Apply | |
| 7.1 | NA. However, SOLAS regulation XI-1/2 is applicable. | |
| 7.2 | Apply | |
| 8.1 | Apply | |
| 8.2 | NA | |
| 8.3 | NA | |
| 9 | NA | |
| 10.1 | Apply | |
| 10.2 | NA | |
| 11.1 | Apply | |
| 11.2 | NA | |
| 11.3 | Apply | |
| 12.1 | Apply | |
| 12.2 | Apply | |
| 12.3 | NA | |
| 13.1 | Apply | |
| 13.2 | NA | |
| 14 | NA | |

~~• For Single Hull Tanker to Double Hull Tanker~~

~~Not relevant.~~

~~• For Single Hull Tanker to Bulk Carrier/Ore Carrier~~

~~When the breadth of wing tanks is less than B/5 or 11.5m, whichever is less, this requirement applies to the relevant cargo hold(s) in way of that wing tank.~~

SC 226 (cont)

~~SC226.11 Structural strength of bulk carriers~~
~~SOLAS regulation XII/5.1 and 5.2~~

~~*"1 Bulk carriers of 150 m in length and upwards of single-side skin construction, designed to carry solid bulk cargoes having a density of 1,000 kg/m$^3$ and above constructed on or after 1 July 1999, shall have sufficient strength to withstand flooding of any one cargo hold to the water level outside the ship in that flooded condition in all loading and ballast conditions, taking also into account dynamic effects resulting from the presence of water in the hold, and taking into account the recommendations adopted by the Organization.*~~

~~*2 Bulk carriers of 150 m in length and upwards of double-side skin construction, in which any part of longitudinal bulkhead is located within B/5 or 11.5 m, whichever is less, inboard from the ship's side at right angle to the centreline at the assigned Summer Load Line, designed to carry bulk cargoes having a density of 1,000 kg/m$^3$ and above, constructed on or after 1 July 2006, shall comply with the structural strength provisions of paragraph 1."*~~

~~Interpretation~~

~~• For Single Hull Tanker to Double Hull Tanker~~

~~Not relevant.~~

~~• For Single Hull Tanker to Bulk Carrier/Ore Carrier~~

~~When the breadth of wing tanks is less than B/5 or 11.5m, whichever is less, this requirement applies to the relevant cargo hold(s) in way of that wing tank.~~

SC 226 (cont)

~~SC226.12 Structural and other requirements for bulk carriers SOLAS regulation XII/6.1~~

~~*"1 Bulk carriers of 150 m in length and upwards of single-side skin construction, carrying solid bulk cargoes having a density of 1,780 kg/m$^3$ and above, constructed before 1 July 1999, shall comply with the following requirements in accordance with the implementation schedule specified in regulation 3:"*~~

~~Interpretation~~

~~• For Single Hull Tanker to Double Hull Tanker~~

~~Not relevant.~~

~~• For Single Hull Tanker to Bulk Carrier/Ore Carrier~~

~~This regulation is not applicable.~~

SC 226 (cont)

~~SC226.13 Structural and other requirements for bulk carriers – SOLAS regulation XII/6.2~~

~~*"2 Bulk carriers of 150 m in length and upwards constructed on or after 1 July 2006, shall comply in all areas with double-side skin construction with the following requirements:*~~

~~*.1 Primary stiffening structures of the double-side skin shall not be placed inside the cargo hold space.*~~

~~*.2 Subject to the provisions below, the distance between the outer shell and the inner shell at any transverse section shall not be less than 1,000 mm measured perpendicular to the side shell. The double-side skin construction shall be such as to allow access for inspection as provided in regulation II-1/3-6 and the Technical Provisions referring thereto.*~~

~~*.1 The clearances below need not be maintained in way of cross ties, upper and lower end brackets of transverse framing or end brackets of longitudinal framing.*~~

~~*.2 The minimum width of the clear passage through the double-side skin space in way of obstructions such as piping or vertical ladders shall not be less than 600 mm.*~~

~~*.3 Where the inner and/or outer skins are transversely framed, the minimum clearance between the inner surfaces of the frames shall not be less than 600 mm.*~~

~~*.4 Where the inner and outer skins are longitudinally framed, the minimum clearance between the inner surfaces of the frames shall not be less than 800 mm. Outside the parallel part of the cargo hold length, this clearance may be reduced where necessitated by the structural configuration, but, shall in no case be less than 600 mm.*~~

~~*.5 The minimum clearance referred to above shall be the shortest distance measured between assumed lines connecting the inner surfaces of the frames on the inner and outer skins."*~~

~~Interpretation~~

~~• For Single Hull Tanker to Double Hull Tanker~~

~~Not relevant.~~

~~• For Single Hull Tanker to Bulk Carrier/Ore Carrier~~

~~This regulation applies. For Permanent Means of Access, the requirements contained in table 2 of the Technical provisions for means of access for inspections (resolution MSC.158(78)) shall not apply to tankers converting from single hull to double hull. However, if, in the course of conversion, substantial new structures are added, these new structures shall comply with the regulation. The term "substantial new structures" means hull structures that are entirely renewed or augmented by new double bottom and/or double side construction (e.g., replacing the entire structure within cargo area or adding a new double bottom and/or double side section to the existing cargo area). Additionally, an approved access manual shall be provided.~~

SC 226 (cont)

~~SC226.14 Structural and other requirements for bulk carriers~~
~~SOLAS regulation XII/6.3 (MSC.216(82) Annex 1)~~

~~*"3 The double-side skin spaces, with the exception of top-side wing tanks, if fitted, shall not be used for the carriage of cargo."*~~

~~Interpretation~~

- ~~For Single Hull Tanker to Double Hull Tanker~~

~~Not relevant.~~

- ~~For Single Hull Tanker to Bulk Carrier/Ore Carrier~~

~~This regulation applies.~~

SC 226 (cont)

~~SC226.15 Structural and other requirements for bulk carriers~~
~~SOLAS regulation XII/6.4 (MSC.216(82) Annex 1)~~

~~*"4 In bulk carriers of 150 m in length and upwards, carrying solid bulk cargoes having a density of 1,000 kg/m$^3$ and above, constructed on or after 1 July 2006:*~~

~~*.1 the structure of cargo holds shall be such that all contemplated cargoes can be loaded and discharged by standard loading/discharge equipment and procedures without damage which may compromise the safety of the structure;*~~

~~*.2 effective continuity between the side shell structure and the rest of the hull structure shall be assured; and*~~

~~*.3 the structure of cargo areas shall be such that single failure of one stiffening structural member will not lead to immediate consequential failure of other structural items potentially leading to the collapse of the entire stiffened panels."*~~

~~Interpretation~~

~~• For Single Hull Tanker to Double Hull Tanker~~

~~Not relevant.~~

~~• For Single Hull Tanker to Bulk Carrier/Ore Carrier~~

~~The newly constructed parts of converted bulk carriers of 150 m in length and upwards, carrying solid bulk cargoes having a density of 1,000 kg/m$^3$ and above, constructed on or after 1 July 2006 shall comply.~~

SC 226 (cont)

~~SC226.16 Survey and maintenance of bulk carriers~~
~~SOLAS regulation XII/7.1~~

~~*"1 Bulk carriers of 150 m in length and upwards of single-side skin construction, constructed before 1 July 1999, of 10 years of age and over, shall not carry solid bulk cargoes having a density of 1,780 kg/m$^3$ and above unless they have satisfactorily undergone either:*~~

~~*.1 a periodical survey, in accordance with the enhanced programme of inspections during surveys required by regulation XI-1/2; or*~~

~~*.2 a survey of all cargo holds to the same extent as required for periodical surveys in the enhanced programme of inspections during surveys required by regulation XI-1/2."*~~

~~Interpretation~~

~~• For Single-Hull Tanker to Double-Hull Tanker~~

~~Not relevant.~~

~~• For Single-Hull Tanker to Bulk Carrier/Ore Carrier~~

~~This regulation is not applicable.~~

SC 226 (cont)

~~SC226.17 Survey and maintenance of bulk carriers~~
~~SOLAS regulation XII/7.2~~

~~*"2 Bulk carriers shall comply with the maintenance requirements provided in regulation II-1/3-1 and the Standards for owners' inspection and maintenance of bulk carrier hatch covers, adopted by the Organization by resolution MSC.169(79), as may be amended by the Organization, provided that such amendments are adopted, brought into force and take effect in accordance with the provisions of article VIII of the present Convention concerning the amendment procedures applicable to the Annex other than chapter I."*~~

~~Interpretation~~

~~• For Single Hull Tanker to Double Hull Tanker~~

~~Not relevant.~~

~~• For Single Hull Tanker to Bulk Carrier/Ore Carrier~~

~~This regulation shall be applied.~~

SC 226 (cont)

~~SC226.18 Information on compliance with requirements for bulk carriers SOLAS regulation XII/8~~

~~*"1 The booklet required by regulation VI/7.2 shall be endorsed by the Administration, or on its behalf, to indicate that regulations 4, 5, 6 and 7, as appropriate, are complied with.*~~

~~*2 Any restrictions imposed on the carriage of solid bulk cargoes having a density of 1,780 kg/m$^3$ and above in accordance with the requirements of regulations 6 and 14 shall be identified and recorded in the booklet referred to in paragraph 1.*~~

~~*3 A bulk carrier to which paragraph 2 applies shall be permanently marked on the side shell at midships, port and starboard, with a solid equilateral triangle having sides of 500 mm and its apex 300 mm below the deck line, and painted a contrasting colour to that of the hull."*~~

~~Interpretation~~

~~• For Single Hull Tanker to Double Hull Tanker~~

~~Not relevant.~~

~~• For Single Hull Tanker to Bulk Carrier/Ore Carrier~~

~~This regulation shall be applied.~~

SC 226 (cont)

~~SC226.19 Requirements for bulk carriers not being capable of complying with regulation 4.3 due to the design configuration of their cargo holds~~

~~SOLAS regulation XII/9~~

~~*"For bulk carriers constructed before 1 July 1999 being within the application limits of regulation 4.3, which have been constructed with an insufficient number of transverse watertight bulkheads to satisfy that regulation, the Administration may allow relaxation from the application of regulations 4.3 and 6, on condition that they shall comply with the following requirements:*~~

~~*.1 for the foremost cargo hold, the inspections prescribed for the annual survey in the enhanced programme of inspections during surveys required by regulation XI-1/2 shall be replaced by the inspections prescribed therein for the intermediate survey of cargo holds;*~~

~~*.2 they are provided with bilge well high water level alarms in all cargo holds, or in cargo conveyor tunnels, as appropriate, giving an audible and visual alarm on the navigation bridge, as approved by the Administration or an organization recognized by it in accordance with the provisions of regulation XI-1/1; and*~~

~~*.3 they are provided with detailed information on specific cargo hold flooding scenarios. This information shall be accompanied by detailed instructions on evacuation preparedness under the provisions of section 8 of the International Safety Management (ISM) Code and be used as the basis for crew training and drills."*~~

~~Interpretation~~

- ~~For Single Hull Tanker to Double Hull Tanker~~

~~Not relevant.~~

- ~~For Single Hull Tanker to Bulk Carrier/Ore Carrier~~

~~This regulation is not applicable.~~

SC 226 (cont)

~~SC226.20 Solid bulk cargo density declaration~~
~~SOLAS regulation XII/10~~

~~*"1 Prior to loading bulk cargo on bulk carriers of 150 m in length and upwards, the shipper shall declare the density of the cargo, in addition to providing the cargo information required by regulation VI/2.*~~

~~*2 For bulk carriers to which regulation 6 applies, unless such bulk carriers comply with all relevant requirements of this chapter applicable to the carriage of solid bulk cargoes having a density of 1,780 kg/m$^3$ and above, any cargo declared to have a density within the range 1,250 kg/m$^3$ to 1,780 kg/m$^3$ shall have its density verified by an accredited testing organization."*~~

~~Interpretation~~

~~• For Single Hull Tanker to Double Hull Tanker~~

~~Not relevant.~~

~~• For Single Hull Tanker to Bulk Carrier/Ore Carrier~~

~~This regulation shall be applied.~~

SC 226 (cont)

~~SC226.21 Loading instrument~~
~~SOLAS regulation XII/11~~

~~*"Loading instrument*~~
~~*(Unless provided otherwise, this regulation applies to bulk carriers regardless of their date of construction)*~~

~~*1 Bulk carriers of 150 m in length and upwards shall be fitted with a loading instrument capable of providing information on hull girder shear forces and bending moments, taking into account the recommendation adopted by the Organization.*~~

~~*2 Bulk carriers of 150 m in length and upwards constructed before 1 July 1999 shall comply with the requirements of paragraph 1 not later than the date of the first intermediate or periodical survey of the ship to be carried out after 1 July 1999.*~~

~~*3 Bulk carriers of less than 150 m in length constructed on or after 1 July 2006 shall be fitted with a loading instrument capable of providing information on the ship's stability in the intact condition. The computer software shall be approved for stability calculations by the Administration and shall be provided with standard conditions for testing purposes relating to the approved stability information."*~~

~~Interpretation~~

- ~~For Single Hull Tanker to Double Hull Tanker~~

~~Not relevant.~~

- ~~For Single Hull Tanker to Bulk Carrier/Ore Carrier~~

~~This regulation shall be applied.~~

SC 226 (cont)

SC226.22 Hold, ballast and dry space water ingress alarms
SOLAS regulation XII/12

*"Hold, ballast and dry space water ingress alarms*
*(This regulation applies to bulk carriers regardless of their date of construction)*

*1 Bulk carriers shall be fitted with water level detectors:*

*.1 in each cargo hold, giving audible and visual alarms, one when the water level above the inner bottom in any hold reaches a height of 0.5 m and another at a height not less than 15% of the depth of the cargo hold but not more than 2 m. On bulk carriers to which regulation 9.2 applies, detectors with only the latter alarm need be installed. The water level detectors shall be fitted in the aft end of the cargo holds. For cargo holds which are used for water ballast, an alarm overriding device may be installed. The visual alarms shall clearly discriminate between the two different water levels detected in each hold;*

*.2 in any ballast tank forward of the collision bulkhead required by regulation II-1/12, giving an audible and visual alarm when the liquid in the tank reaches a level not exceeding 10% of the tank capacity. An alarm overriding device may be installed to be activated when the tank is in use; and*

*.3 in any dry or void space other than a chain cable locker, any part of which extends forward of the foremost cargo hold, giving an audible and visual alarm at a water level of 0.1 m above the deck. Such alarms need not be provided in enclosed spaces the volume of which does not exceed 0.1% of the ship's maximum displacement volume.*

*2 The audible and visual alarms specified in paragraph 1 shall be located on the navigation bridge.*

*3 Bulk carriers constructed before 1 July 2004 shall comply with the requirements of this regulation not later than the date of the annual, intermediate or renewal survey of the ship to be carried out after 1 July 2004, whichever comes first."*

Interpretation

- For Single Hull Tanker to Double Hull Tanker

Not relevant.

- For Single Hull Tanker to Bulk Carrier/Ore Carrier

This regulation shall be applied.

SC 226 (cont)

~~SC226.23 Availability of pumping systems~~
~~SOLAS regulation XII/13~~

~~"*Availability of pumping systems*~~
~~*(This regulation applies to bulk carriers regardless of their date of construction)*~~

~~*1 On bulk carriers, the means for draining and pumping ballast tanks forward of the collision bulkhead and bilges of dry spaces any part of which extends forward of the foremost cargo hold shall be capable of being brought into operation from a readily accessible enclosed space, the location of which is accessible from the navigation bridge or propulsion machinery control position without traversing exposed freeboard or superstructure decks. Where pipes serving such tanks or bilges pierce the collision bulkhead, valve operation by means of remotely operated actuators may be accepted, as an alternative to the valve control specified in regulation II-1/12, provided that the location of such valve controls complies with this regulation.*~~

~~*2 Bulk carriers constructed before 1 July 2004 shall comply with the requirements of this regulation not later than the date of the first intermediate or renewal survey of the ship to be carried out after 1 July 2004, but, in no case, later than 1 July 2007."*~~

~~Interpretation~~

- ~~For Single Hull Tanker to Double Hull Tanker~~

~~Not relevant.~~

- ~~For Single Hull Tanker to Bulk Carrier/Ore Carrier~~

~~This regulation shall be applied.~~

SC 226 (cont)

SC226.24 Restrictions from sailing with any hold empty
SOLAS regulation XII/14

*"Bulk carriers of 150 m in length and upwards of single-side skin construction, carrying cargoes having a density of 1,780 kg/m$^3$ and above, if not meeting the requirements for withstanding flooding of any one cargo hold as specified in regulation 5.1 and the Standards and criteria for side structures of bulk carriers of single-side skin construction, adopted by the Organization by resolution MSC.168(79), as may be amended by the Organization, provided that such amendments are adopted, brought into force and take effect in accordance with the provisions of article VIII of the present Convention concerning the amendment procedures applicable to the Annex other than chapter I, shall not sail with any hold loaded to less than 10% of the hold's maximum allowable cargo weight when in the full load condition, after reaching 10 years of age. The applicable full load condition for this regulation is a load equal to or greater than 90% of the ship's deadweight at the relevant assigned freeboard."*

Interpretation

- For Single Hull Tanker to Double Hull Tanker

Not relevant.

- For Single Hull Tanker to Bulk Carrier/Ore Carrier

This regulation is not applicable.

End of Document

# SC 244 Load testing of hooks for primary release of lifeboats and rescue boats

(May 2011) (Rev.1 Nov 2012) (Corr.1 Nov 2015)

**(IMO Res. MSC.81(70), Part 2, Ch. 5.3.4)**

**Regulation**

*5.3.4 The connection of each release gear which is fixed to the boat should be subjected to a load equal to the weight of the boat with its full complement of persons and equipment (or two times the weight of the boat in the case of single fall systems). There should be no damage to the release gear or its connection to the boat.*

**Interpretation**

1. The above regulation applies only to lifeboats and rescue boats launched by falls.

2. The test does not apply to the secondary means of launching for freefall lifeboats.

3. The test may be carried out onboard the ship or onshore, either at the manufacturer's plant or at the shipyard, by using an appropriate mock-up of the launching arrangements which is equivalent to the launching arrangement installed onboard the ship.

4. The "weight of the boat" to be considered for the load in the case of single fall systems is the "weight of the boat with its full complement of persons and equipment", which according to MSC.81(70), Part 2, Paragraph 5.3.4 shall be multiplied by two.

---

Notes:

1. This UI is to be uniformly implemented by IACS Societies on ships the keels of which are laid from 1 July 2012.

2. Rev.1 of this UI is to be uniformly implemented by IACS Societies on ships the keels of which are laid from 1 January 2014.

End of Document

SC 249 (Oct 2011) (Corr.1 Apr 2012) (Rev.1 Feb 2013)

# Implementation of SOLAS II-1, Regulation 3-5 and MSC.1/Circ.1379

SOLAS Chapter II-1, Regulation 3-5

*"From 1 January 2011, for all ships, new installation of materials which contain asbestos shall be prohibited."*

MSC.1/Circ.1379

*"In the context of this regulation, new installation of materials containing asbestos means any new physical installation on board. Any material purchased prior to 1 January 2011 being kept in the ship's store or in the shipyard for a ship under construction, should not be permitted to be installed after 1 January 2011 as a working part."*

Unified Interpretations

SOLAS II-1, Regulation 3-5

1. Verification that *"new installation of materials which contain asbestos"* under SOLAS II-1/3-5 is not made on ships requires the Recognized Organization to review asbestos-free declarations and supporting documentation, for the structure, machinery, electrical installations and equipment covered by the SOLAS Convention, which is to be provided to the Recognized Organization by shipyards, repair yards, and equipment manufacturers taking into account appendix 8 of the 2011 Guidelines for the development of the inventory of hazardous materials (resolution MEPC.197(62)) for:

- new construction (keel laid, or at a similar stage of construction, on or after 1 July 2012);

- conversions (contract date for the conversion or, in the absence of a contract, the date on which the work identifiable with the specific conversion begins) on or after 1 July 2012;

---

NOTES:

1. This ~~UI~~ Unified Interpretation is to be uniformly implemented by IACS Societies ~~as soon as possible, but~~ not later than 1 July 2012.

2. Revision 1 of this Unified Interpretation is to be uniformly implemented by IACS Societies not later than 1 July 2013.

SC 249 (cont)

MSC.1/Circ.1379

2. The phrase *"new installation of materials containing asbestos"* in MSC.1/Circ.1379:

- means that material used (i.e., repaired, replaced, maintained or added) as a working part of the ship as per Annex 1 which is installed on or after 1 July 2012 is required to be documented with an asbestos-free declaration. The Recognized Organization will, in consultation with the Company's nominated person responsible to control asbestos-containing material onboard as per the Safety Management System in accordance with MSC/Circ.1045, audit this documentation during annual safety construction and safety equipment surveys; and

- does not preclude the stowage of material which contains asbestos onboard (e.g., spare parts existing on board as of 1 July 2012).

3. The phrase *"should not be permitted to be installed after 1 January 2011 as a working part"* in MSC.1/Circ.1379 means that replacement, maintenance or addition of materials used for the structure, machinery, electrical installations and equipment covered by the SOLAS Convention which contain asbestos is prohibited.

SC 249 (cont)

Annex 1

| Structure and/or equipment | Component |
|---|---|
| Propeller shafting | Packing with low pressure hydraulic piping flange<br>Packing with casing<br>Clutch<br>Brake lining<br>Synthetic stern tubes |
| Diesel engine | Packing with piping flange<br>Lagging material for fuel pipe<br>Lagging material for exhaust pipe<br>Lagging material turbocharger |
| Turbine engine | Lagging material for casing<br>Packing with flange of piping and valve for steam line, exhaust line and drain line<br>Lagging material for piping and valve of steam line, exhaust line and drain line |
| Boiler | Insulation in combustion chamber<br>Packing for casing door<br>Lagging material for exhaust pipe<br>Gasket for manhole<br>Gasket for hand hole<br>Gas shield packing for soot blower and other hole<br>Packing with flange of piping and valve for steam line, exhaust line, fuel line and drain line<br>Lagging material for piping and valve of steam line, exhaust line, fuel line and drain line |
| Exhaust gas economizer | Packing for casing door<br>Packing with manhole<br>Packing with hand hole<br>Gas shield packing for soot blower<br>Packing with flange of piping and valve for steam line, exhaust line, fuel line and drain line<br>Lagging material for piping and valve of steam line, exhaust line, fuel line and drain line |
| Incinerator | Packing for casing door<br>Packing with manhole<br>Packing with hand hole<br>Lagging material for exhaust pipe |
| Auxiliary machinery (pump, compressor, oil purifier, crane) | Packing for casing door and valve<br>Gland packing<br>Brake lining |
| Heat exchanger | Packing with casing<br>Gland packing for valve<br>Lagging material and insulation |

SC 249 (cont)

| | |
|---|---|
| Valve | Gland packing with valve, sheet packing with piping flange<br>Gasket with flange of high pressure and/or high temperature |
| Pipe, duct | Lagging material and insulation |
| Tank (fuel tank, hot water, tank, condenser), other equipments (fuel strainer, lubricant oil strainer) | Lagging material and insulation |
| Electric equipment | Insulation material |
| Ceiling, floor and wall in accommodation area | Ceiling, floor, wall |
| Fire door | Packing, construction and insulation of the fire door |
| Inert gas system | Packing for casing, etc. |
| Air-conditioning system | Sheet packing, lagging material for piping and flexible joint |
| Miscellaneous | Ropes<br>Thermal insulating materials<br>Fire shields/fire proofing<br>Space/duct insulation<br>Electrical cable materials<br>Brake linings<br>Floor tiles/deck underlay<br>Steam/water/vent flange gaskets<br>Adhesives/mastics/fillers<br>Sound damping<br>Moulded plastic products<br>Sealing putty<br>Shaft/valve packing<br>Electrical bulkhead penetration packing<br>Circuit breaker arc chutes<br>Pipe hanger inserts<br>Weld shop protectors/burn covers<br>Fire-fighting blankets/clothing/equipment<br>Concrete ballast |

Note:

The above list ~~above~~ is taken from IMO Resolution MEPC.197(62), Appendix 5, paragraph 2.2.2.1.

End of Document

# MPC2 Operational manuals for oil discharge monitoring and control systems

(1988) (Rev.1 Aug 2015)

**(Annex I, Regulation 31.4)**

*31.4 Instructions as to the operation of the system shall be in accordance with an operational manual approved by the Administration. They shall cover manual as well as automatic operations and shall be intended to ensure that at no time shall oil be discharged except in compliance with the conditions specified in regulation 34 of this Annex.*

**Interpretation**

For compliance with Regulation 31.4 of MARPOL - Annex I and Resolution MEPC.108(49) as amended by Resolution MEPC.240(65), the Oil Discharge Monitoring and Control System Operational Manual is to contain all the details necessary to operate and maintain the system and should include at least the following information. The information may be grouped as indicated, or in an equivalent manner.

Introduction : Particulars of the ship, together with the date on which the system was/is to be installed and index to remainder of manual.
Text of Regulations 31 and 34 to be quoted in full.

Section 1 : Manufacturer's equipment manuals for major components of the system. These may include installation, commissioning, operating and fault finding procedures for the oil content monitor.

Section 2 : Operations manual comprising a description of the ship's cargo ballast systems, designated overboard discharges with sampling points, normal operational procedures, automatic inputs, manual inputs (as applicable), starting interlock and discharge valve control (as applicable), override system, audible and visual alarms, outputs recorded and, where required for manual input, flow rate when discharging by gravity and when pumping ballast overboard. It should also include instructions for the discharge of oily water following mal-function of the equipment.
The above information is to be supported by copies of relevant approved diagrams.
Reference may be made to Section 1, where applicable.

---

Notes:

1. Revision 1 of this Unified Interpretation is to be uniformly implemented by IACS Societies for ships contracted for construction on or after 1 July 2016.

2. The “contracted for construction” date means the date on which the contract to build the vessel is signed between the prospective owner and the shipbuilder. For further details regarding the date of “contract for construction”, refer to IACS Procedural Requirement (PR) No. 29.

**MPC 2**
(cont)

Section 3 : Technical manual comprising fault finding schedules, maintenance record and electrical, pneumatic and hydraulic schematic diagrams and descriptions of the complete system.
Reference may be made to Section 1, where applicable.

Section 4 : Test and check-out procedures to include a functional test at installation and guidance notes for the Surveyors carrying out initial and in-service surveys.
Reference may be made to Section 1, where applicable.

Appendix I : Technical installation specification including location and mounting of components, arrangements for maintaining integrity of 'safe' zones, safety requirements for electrical equipment installed in hazardous zones supported by copies of approved drawings, sample piping layout and sample delay calculations, design and arrangements of sampling probes, flushing arrangements and zero setting.
Reference may be made to Section 1, where applicable.

Appendix II : Copy of Type Approval Certificate and Workshop Certificates for major components.

End of Document

# MPC6 Calculation of the aggregate capacity of SBT

(1997) (Rev.1 Aug 2015)

**(Regulation 19.3.4)**

*19.3.4 The aggregate capacity of ballast tanks*

*On crude oil tankers of 20,000 tonnes deadweight and above and product carriers of 30,000 tonnes deadweight and above, the aggregate capacity of wing tanks, double bottom tanks, forepeak tanks and after peak tanks shall not be less than the capacity of segregated ballast tanks necessary to meet the requirements of regulation 18 of this Annex. Wing tanks or spaces and double bottom tanks used to meet the requirements of regulation 18 shall be located as uniformly as practicable along the cargo tank length. Additional segregated ballast capacity provided for reducing longitudinal hull girder bending stress, trim, etc. may be located anywhere within the ship.*

**Interpretation**

1. Any ballast carried in localized inboard extensions, indentations or recesses of the double hull, such as bulkhead stools, should be excess ballast above the minimum requirement for segregated ballast capacity according to regulation 18.

2. In calculating the aggregate capacity under regulation 19.3.4, the following should be taken into account:

2.1 the capacity of engine-room ballast tanks should be excluded from the aggregate capacity of ballast tanks;

2.2 the capacity of ballast tank located inboard of double hull should be excluded from the aggregate capacity of ballast tanks (see figure 1).

---

Notes:

1. This IACS Unified Interpretation was submitted to IMO and is contained in MEPC/Circ. 316 of 25th July 1996.

2. Revision 1 of this Unified Interpretation is to be uniformly implemented by IACS Societies for ships contracted for construction on or after 1 July 2016.

3. The "contracted for construction" date means the date on which the contract to build the vessel is signed between the prospective owner and the shipbuilder. For further details regarding the date of "contract for construction", refer to IACS Procedural Requirement (PR) No. 29.

# MPC6
(cont)

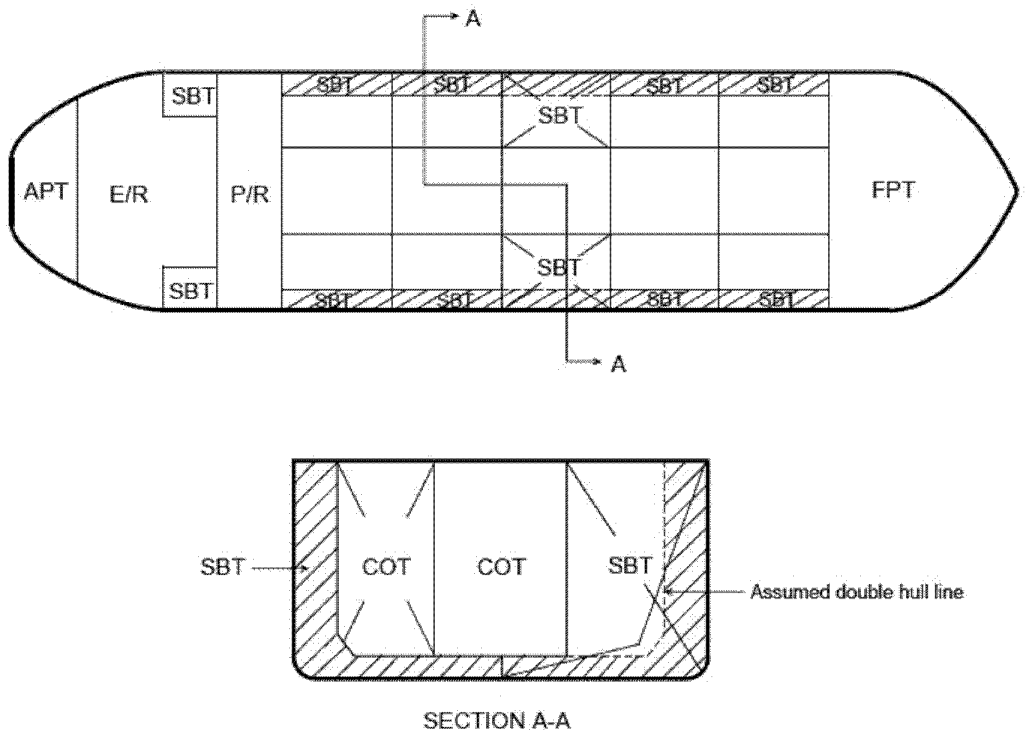


Fig. 1

**MPC6** 2.3 (cont) spaces such as void spaces located in the double hull within the cargo tank length should be included in the aggregate capacity of ballast tanks (see figure 2).

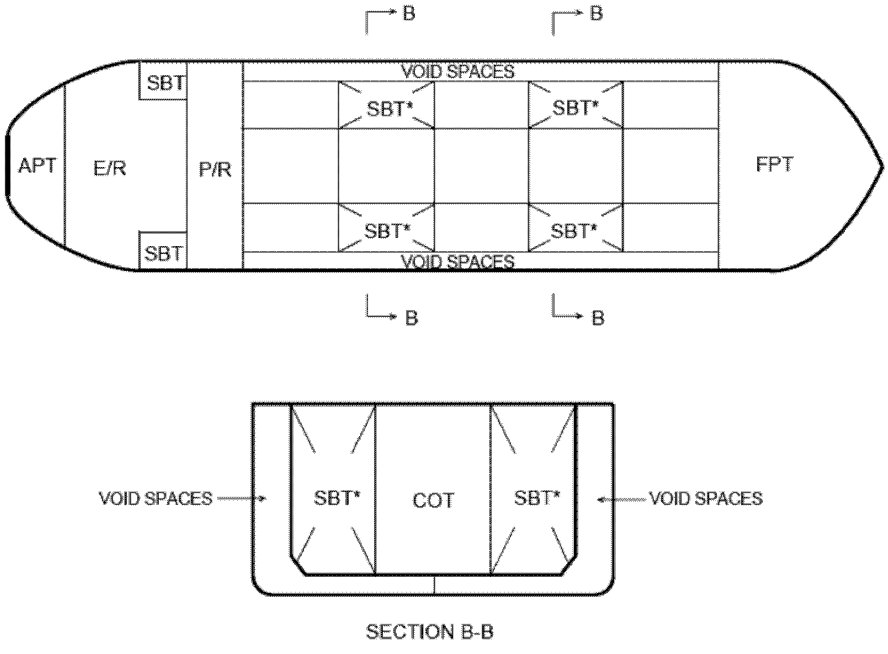


Fig. 2

End of Document

**MODU 1** (May 2015) (Rev.1 Oct 2015)

# IACS Unified Interpretations for the application of MODU Code Chapter 2 paragraphs 2.1, 2.2, 2.3, 2.4 and revised technical provisions for means of access for inspections (resolution MSC.158(78))

Note:

1. This Unified Interpretation is to be applied by IACS Societies on units contracted for construction from 1 July 2016, unless they are provided with written instructions to apply a different interpretation by the Administration on whose behalf they are authorized to act as a Recognized Organization.

2. Rev.1 is to be applied by IACS Societies on units contracted for construction from 1 January 2017, unless they are provided with written instructions to apply a different interpretation by the Administration on whose behalf they are authorized to act as a Recognized Organization.

~~2~~3. The "contracted for construction" date means the date on which the contract to build the vessel is signed between the prospective owner and the shipbuilder. For further details regarding the date of "contract for construction", refer to IACS Procedural Requirement (PR) No. 29.

MODU 1 (cont)

**2009 MODU Code, section 2.2.2**

**2.2.2 Safe access to holds, tanks, ballast tanks and other spaces**

2.2.2.1 Safe access to holds, cofferdams, tanks and other spaces should be direct from the open deck and such as to ensure their complete inspection. Safe access may be from a machinery space, pump-room, deep cofferdam, pipe tunnel, hold, double hull space or similar compartment not intended for the carriage of oil or hazardous materials where it is impracticable to provide such access from an open deck.

2.2.2.2 Tanks, and subdivisions of tanks, having a length of 35 m or more, should be fitted with at least two access hatchways and ladders, as far apart as practicable. Tanks less than 35 m in length should be served by at least one access hatchway and ladder. When a tank is subdivided by one or more swash bulkheads or similar obstructions which do not allow ready means of access to the other parts of the tank, at least two hatchways and ladders should be fitted.

**Interpretation**

This regulation is only applicable to integral tanks. Independent tanks can be excluded. Also, spud cans and jack cases of self-elevating units can be excluded.

The wording "not intended for the carriage of oil or hazardous materials" applies only to "similar compartments", i.e. safe access can be through a pump-room, deep cofferdam, pipe tunnel, cargo hold or double hull space.

**Technical Background**

Means of Access (MA) specified in the Technical provisions contained in resolution MSC.158(78) are not specific with respect to the application to integral tanks or also to independent tanks. The MA regulated under 2.2.1.1 of the 2009 IMO MODU Code is for overall and close-up inspections and thickness measurements of the unit's structure. Independent tanks are not considered part of the unit's structure. Therefore it is assumed that the target tanks are integral tanks.

MODU 1 (cont)

**2009 MODU Code, section 2.2.1.2**

2.2.1.2 Where a permanent means of access may be susceptible to damage during normal operations or where it is impracticable to fit permanent means of access, the Administration may allow, in lieu thereof, the provision of movable or portable means of access, as specified in the Technical provisions, provided that the means of attaching, rigging, suspending or supporting the portable means of access forms a permanent part of the unit's structure. All portable equipment shall be capable of being readily erected or deployed by unit's personnel.

**Interpretation**

Some possible alternative means of access are listed under paragraph 3.9 of the MODU Technical Provisions for means of access for inspection (MODU TP). Always subject to acceptance as equivalent by the Administration, alternative means such as an unmanned robot arm, ROV's with necessary equipment of the permanent means of access for overall and close-up inspections and thickness measurements of the deck head structure such as deck transverses and deck longitudinals of ballast tanks and other tanks, holds and other spaces where gas hazardous atmosphere may be present, are to be capable of:

- safe operation in ullage space in gas-free environment;
- introduction into the place directly from a deck access.

When considering use of alternative means of access as addressed by paragraph 3.9 of the MODU TP, refer to IACS Recommendation No.91 "Guidelines for Approval/Acceptance of Alternative Means of Access".

**Technical Background**

Innovative approaches, in particular a development of robot in place of elevated passageways, are encouraged and it is considered worthwhile to provide the functional requirement for the innovative approach.

MODU 1 (cont)

**2009 MODU Code, section 2.2.1.3**

2.2.1.3 The construction and materials of all means of access and their attachment to the unit's structure should be to the satisfaction of the Administration. The means of access should be subject to inspection prior to, or in conjunction with, its use in carrying out surveys in accordance with section 1.6.

**Interpretation**

Note: This interpretation is to be contained in a section of the MA Manual.

**Inspection**

The MA arrangements, including portable equipment and attachments, are to be periodically inspected by the crew or competent inspectors as and when it is going to be used to confirm that the MAs remain in serviceable condition.

**Procedures**

1. Any Company authorised person using the MA shall assume the role of inspector and check for obvious damage prior to using the access arrangements. Whilst using the MA the inspector is to verify the condition of the sections used by close up examination of those sections and note any deterioration in the provisions. Should any damage or deterioration be found, the effect of such deterioration is to be assessed as to whether the damage or deterioration affects the safety for continued use of the access. Deterioration found that is considered to affect safe use is to be determined as "substantial damage" and measures are to be put in place to ensure that the affected section(s) are not to be further used prior effective repair.

2. Statutory survey of any space that contains MA shall include verification of the continued effectiveness of the MA in that space. Survey of the MA shall not be expected to exceed the scope and extent of the survey being undertaken. If the MA is found deficient the scope of survey is to be extended if this is considered appropriate.

3. Records of all inspections are to be established based on the requirements detailed in the MODU's Safety Management System. The records are to be readily available to persons using the MAs and a copy attached to the MA Manual. The latest record for the portion of the MA inspected is to include as a minimum the date of the inspection, the name and title of the inspector, a confirmation signature, the sections of MA inspected, verification of continued serviceable condition or details of any deterioration or substantial damage found. A file of permits issued is to be maintained for verification.

**Technical Background**

It is recognised that MA may be subject to deterioration in the long term due to corrosive environment and external forces from unit motions and sloshing of liquid contained in the tank. MA therefore is to be inspected at every opportunity of tank/space entry.

MODU 1 (cont)

**2009 MODU Code, paragraph 2.2.2.2**

2.2.2.2 Tanks, and subdivisions of tanks, having a length of 35 m or more, should be fitted with at least two access hatchways and ladders, as far apart as practicable. Tanks less than 35 m in length should be served by at least one access hatchway and ladder. When a tank is subdivided by one or more swash bulkheads or similar obstructions which do not allow ready means of access to the other parts of the tank, at least two hatchways and ladders should be fitted.

**Interpretation**

A tank of less than 35 m length without a swash bulkhead requires only one access hatch.

Where rafting is indicated in the access manual as the means to gain ready access to the under deck structure, the term *"similar obstructions"* referred to in the regulation includes internal structures (e.g., webs >1.5m deep) which restrict the ability to raft (at the maximum water level needed for rafting of under deck structure) directly to the nearest access ladder and hatchway to deck. When rafts or boats alone, as an alternative means of access are allowed, permanent means of access are to be provided to allow safe entry and exit. This means:

a) access direct from the deck via a vertical ladder and small platform fitted approximately 2m below the deck in each bay; or

b) access to deck from a longitudinal permanent platform having ladders to deck in each end of the tank. The platform shall, for the full length of the tank, be arranged in level with, or above, the maximum water level needed for rafting of under deck structure. For this purpose, the ullage corresponding to the maximum water level is to be assumed not more than 3m from the deck plate measured at the midspan of deck transverses and in the middle length of the tank. A permanent means of access from the longitudinal permanent platform to the water level indicated above is to be fitted in each bay (e.g. permanent rungs on one of the deck webs inboard of the longitudinal permanent platform).

MODU 1 (cont)

**2009 MODU Code, section 2.2.3**

2.2.3 Access manual

2.2.3.1 A unit's means of access to carry out overall and close-up inspections and thickness measurements should be described in an access manual which may be incorporated in the unit's operating manual. The manual should be updated as necessary, and an updated copy maintained on board. The access manual should include the following for each space:

.1.1 plans showing the means of access to the space, with appropriate technical specifications and dimensions;

.1.2 plans showing the means of access within each space to enable an overall inspection to be carried out, with appropriate technical specifications and dimensions. The plans should indicate from where each area in the space can be inspected;

.1.3 plans showing the means of access within the space to enable close-up inspections to be carried out, with appropriate technical specifications and dimensions. The plans should indicate the positions of critical structural areas, whether the means of access is permanent or portable and from where each area can be inspected;

.1.4 instructions for inspecting and maintaining the structural strength of all means of access and means of attachment, taking into account any corrosive atmosphere that may be within the space;

.1.5 instructions for safety guidance when rafting is used for close-up inspections and thickness measurements;

.1.6 instructions for the rigging and use of any portable means of access in a safe manner;

.1.7 an inventory of all portable means of access; and

.1.8 records of periodical inspections and maintenance of the unit's means of access.

**Interpretation**

The access manual is to address spaces listed in section 2.2.2.

As a minimum the English version is to be provided.

The access manual is to contain at least the following two parts:

Part 1: Plans, instructions and inventory required by paragraphs .1.1 to .1.7 of section 2.2.3.1. This part is to be approved by the Administration or the organization recognised by the Administration.

Part 2: Form of record of inspections and maintenance, and change of inventory of portable equipment due to additions or replacement after construction. This part is to be approved for its form only at new building.

The following matters are to be addressed in the access manual:

1. The access manual is to clearly cover scope as specified in the regulations for use by crews, surveyors and port State control officers.

MODU 1 (cont)

2. Approval / re-approval procedure for the manual, i.e. any changes of the permanent, portable, movable or alternative means of access within the scope of the regulation and the Technical provisions are subject to review and approval by the Administration or by the organization recognised by the Administration.

3. Verification of MA is to be part of safety construction survey for continued effectiveness of the MA in that space which is subject to the statutory survey.

4. Inspection of MA by the crew and/or a competent inspector of the company as a part of regular inspection and maintenance (see interpretation for section 2.2.1.3).

5. Actions to be taken if MA is found unsafe to use.

6. In case of use of portable equipment plans showing the means of access within each space indicating from where and how each area in the space can be inspected.

Refer to IACS Recommendation No.90 "Ship Structural Access Manual"

MODU 1 (cont)

**2009 MODU Code, section 2.2.3.2**

2.2.3.2 For the purpose of this paragraph "critical structural areas" are locations which have been identified from calculations to require monitoring or from the service history of similar or sister units to be sensitive to cracking, buckling, deformation or corrosion which would impair the structural integrity of the unit.

**Interpretation**

Critical structural areas are to be identified by advanced calculation techniques for structural strength and fatigue performance, if available, and feed back from the service history and design development of similar or sister units.

MODU 1 (cont)

**2009 MODU Code, section 2.2.4.1**

2.2.4 General technical specifications

2.2.4.1 For access through horizontal openings, hatches or manholes, the dimensions should be sufficient to allow a person wearing a self-contained air-breathing apparatus and protective equipment to ascend or descend any ladder without obstruction and also provide a clear opening to facilitate the hoisting of an injured person from the bottom of a confined space. The minimum clear opening should not be less than 600 mm x 600 mm. When access to a hold is arranged through a flush manhole in the deck or a hatch, the top of the ladder should be placed as close as possible to the deck or hatch coaming. Access hatch coamings having a height greater than 900 mm should also have steps on the outside in conjunction with the ladder.

**Interpretation**

The minimum clear opening of 600 mm x 600 mm may have corner radii up to 100 mm maximum. The clear opening is specified in MSC/Circ.686 to keep the opening fit for passage of personnel wearing a breathing apparatus. In such a case where as a consequence of structural analysis of a given design the stress is to be reduced around the opening, it is considered appropriate to take measures to reduce the stress such as making the opening larger with increased radii, e.g. 600 x 800 with 300 mm radii, in which a clear opening of 600 x 600 mm with corner radii up to 100mm maximum fits.

**Technical Background**

The interpretation is based upon the established Guidelines in MSC/Circ.686.

**Ref.**

Paragraphs 9 of Annex of MSC/Circ.686.

MODU 1 (cont)

**2009 MODU Code, section 2.2.4.2**

2.2.4.2 For access through vertical openings, or manholes, in swash bulkheads, floors, girders and web frames providing passage through the length and breadth of the space, the minimum clear opening should be not less than 600 mm x 800 mm at a height of not more than 600 mm from the bottom shell plating unless gratings or other foot holds are provided.

**Interpretation**

1. The minimum clear opening of not less than 600 mm x 800 mm may also include an opening with corner radii of 300 mm. An opening of 600mm in height x 800mm in width may be accepted as access openings in vertical structures where it is not desirable to make large opening in the structural strength aspects, i.e. girders and floors in double bottom tanks.

2. Subject to verification of easy evacuation of injured person on a stretcher the vertical opening 850 mm x 620 mm with wider upper half than 600 mm, while the lower half may be less than 600 mm with the overall height not less than 850 mm is considered an acceptable alternative to the traditional opening of 600 mm x 800 mm with corner radii of 300 mm.

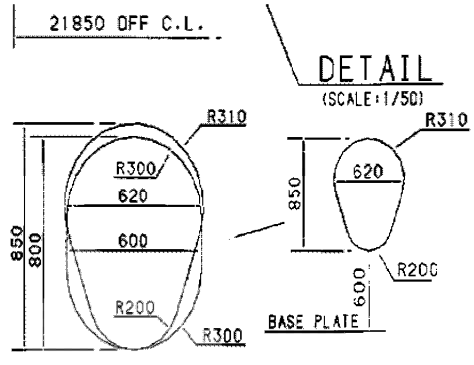


3. If a vertical opening is at a height of more than 600 mm steps and handgrips are to be provided. In such arrangements it is to be demonstrated that an injured person can be easily evacuated.

**Technical Background**

The interpretation is based upon the established Guidelines in MSC/Circ.686 and an innovative design is considered for easy access by humans through the opening.

**Ref.**

Paragraphs 11 of Annex of MSC/Circ.686.

MODU 1 (cont)

## Appendix 1

**Unified Interpretation of IMO Resolution MSC. 133(76), as amended by resolution MSC. 158(78), as applicable for MODUs**

Note: This document has been derived from IMO Resolution 133(76) for the purpose of interpretation for Mobile Offshore Drilling Units.

### 1. Preamble

1.1 It has long been recognized that the only way of ensuring that the condition of a MODU's structure is maintained to conform to the applicable requirements is for all its components to be surveyed on a regular basis throughout their operational life. This will ensure that they are free from damage such as cracks, buckling or deformation due to corrosion, overloading, or contact damage and that thickness diminution is within established limits. The provision of suitable means of access to the hull structure for the purpose of carrying out overall and close-up surveys and inspections is essential and such means should be considered and provided for at the design stage.

1.2 MODUs should be designed and built with due consideration as to how they will be surveyed by flag State inspectors and classification society surveyors during their in-service life and how the crew will be able to monitor the condition of the MODU. Without adequate access, the structural condition of the MODU can deteriorate undetected and major structural failure can arise. A comprehensive approach to design and maintenance is required to cover the whole projected life of the MODU.

1.3 In order to address this issue these Technical provisions for means of access for inspections have been developed (hereinafter called the Technical provisions), intended to facilitate close-up inspections and thickness measurements of the MODU's structure referred to in 2009 MODU Code, paragraph 2.2 on Access.

1.4 Permanent means of access which are designed to be integral parts of the structure itself are preferred and Administrations may allow reasonable deviations to facilitate such designs.

**Interpretation**

In the context of the above requirement, the deviation shall be applied only to distances between integrated PMA that are the subject of paragraph 2.1.2 of Table 1.

Deviations should not be applied to the distances governing the installation of underdeck longitudinal walkways and dimensions that determine whether permanent access are required or not, such as height of the spaces and height to elements of the structure (e.g. cross-ties).

### 2. Definitions

For the purpose of these Technical provisions, the following definitions apply in addition to those provided in the 2009 MODU Code, as amended:

.1 Rung means the step of a vertical ladder or step on the vertical surface.

.2 Tread means the step of an inclined ladder or step for the vertical access opening.

MODU 1 (cont)

.3 Flight of an inclined ladder means the actual stringer length of an inclined ladder. For vertical ladders, it is the distance between the platforms.

.4 Stringer means:

.1 the frame of a ladder; or

.2 the stiffened horizontal plating structure fitted on the side shell, transverse bulkheads and/or longitudinal bulkheads in the space. For the purpose of ballast tanks of less than 5 m width, the horizontal plating structure is credited as a stringer and a longitudinal permanent means of access, if it provides a continuous passage of 600 mm or more in width past frames or stiffeners on the side shell or longitudinal or transverse bulkhead. Openings in stringer plating utilized as permanent means of access shall be arranged with guard rails or grid covers to provide safe passage on the stringer or safe access to each transverse web.

.5 Vertical ladder means a ladder of which the inclined angle is 70° and over up to 90°. A vertical ladder shall not be skewed by more than 2°.

.6 Overhead obstructions mean the deck or stringer structure including stiffeners above the means of access.

.7 Distance below deck head means the distance below the plating.

.8 Cross deck means the transverse area of the main deck which is located inboard and at both sides of a transverse bulkhead. Between large hatches/holds or between moonpool opening and hatches/holds of a drillship or column stabilized unit.

.9 Hold means any dry space other than a machinery space located within the hull of surface units and self-elevating units or within the upper hull, columns or pontoons of column-stabilized units. Dry storage spaces and void spaces are considered holds.

**3. Technical provisions**

3.1 Structural members subject to the close-up inspections and thickness measurements of the MODU's structure referred to in 2009 MODU Code, section 2.2, except those in double bottom spaces, shall be provided with a permanent means of access to the extent as specified in table 1. Approved alternative methods may be used in combination with the fitted permanent means of access, provided that the structure allows for its safe and effective use.

**Interpretation**

The permanent means of access to a space can be credited for the permanent means of access for inspection.

**Technical Background**

The Technical provisions specify means of access to a space and to hull structure for carrying out overall and close up surveys and inspections. Requirements of MA to hull structure may not always be suitable for access to a space. However if the MA for access to a space can also be used for the intended surveys and inspections such MA can be credited for the MA for use for surveys and inspections.

MODU 1 (cont)

3.2 Permanent means of access should as far as possible be integral to the structure of the MODU, thus ensuring that they are robust and at the same time contributing to the overall strength of the structure of the MODU.

3.3 Elevated passageways forming sections of a permanent means of access, where fitted, shall have a minimum clear width of 600 mm, except for going around vertical webs where the minimum clear width may be reduced to 450 mm, and have guard rails over the open side of their entire length. Sloping structures providing part of the access shall be of a non-skid construction. Guard rails shall be 1,000 mm in height and consist of a rail and an intermediate bar 500 mm in height and of substantial construction. Stanchions shall be not more than 3 m apart.

**Interpretation**

1. Sloping structures are structures that are sloped by 5 or more degrees from horizontal plane when a unit is in upright position at even-keel.

2. Guard rails are to be fitted on the open side. For stand alone passageways guard rails are to be fitted on both sides of these structures.

3. Discontinuous top handrails are allowed, provided the gap does not exceed 50 mm.

The same maximum gap is to be considered between the top handrail and other structural members (i.e. bulkhead, web frame, etc.).

The maximum distance between the adjacent stanchions across the handrail gaps is to be 350 mm where the top and mid handrails are not connected together and 550 mm when they are connected together.

The maximum distance between the stanchion and other structural members is not to exceed 200 mm where the top and mid handrails are not connected together and 300 mm when they are connected together.

When the top and mid handrails are connected by a bent rail, the outside radius of the bent part is not to exceed 100 mm (see Figure below).

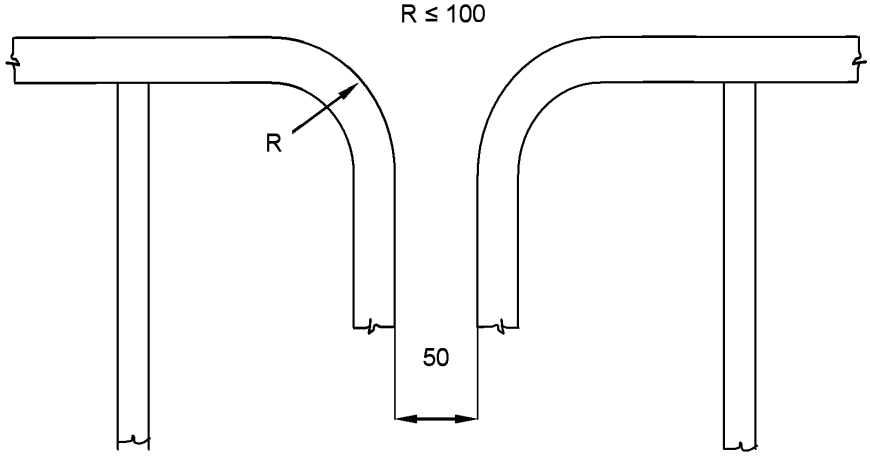

MODU 1 (cont)

4. Non-skid construction is such that the surface on which personnel walks provides sufficient friction to the sole of boots even if the surface is wet and covered with thin sediment.

5. "Substantial construction" is taken to refer to the designed strength as well as the residual strength during the service life of the unit. Durability of passageways together with guard rails is to be ensured by the initial corrosion protection and inspection and maintenance during services.

6. For guard rails, use of alternative materials such as GRP is to be subject to compatibility with the liquid carried in the tank. Non-fire resistant materials are not to be used for means of access to a space with a view to securing an escape route at a high temperature.

7. Requirements for resting platforms placed between ladders are equivalent to those applicable to elevated passageways.

**Ref.**

Paragraph 10 of Annex to MSC/Circ.686

3.4 Access to permanent means of access and vertical openings from the MODU's bottom shall be provided by means of easily accessible passageways, ladders or treads. Treads shall be provided with lateral support for the foot. Where the rungs of ladders are fitted against a vertical surface, the distance from the centre of the rungs to the surface shall be at least 150 mm. Where vertical manholes are fitted higher than 600 mm above the walking level, access shall be facilitated by means of treads and hand grips with platform landings on both sides.

**Interpretation**

Where the vertical manhole is at a height of more than 600 mm above the walking level, it shall be demonstrated that an injured person can be easily evacuated.

3.5 Permanent inclined ladders shall be inclined at an angle of less than 70°. There shall be no obstructions within 750 mm of the face of the inclined ladder, except that in way of an opening this clearance may be reduced to 600 mm. Resting platforms of adequate dimensions shall be provided, normally at a maximum of 6 m vertical height. Ladders and handrails shall be constructed of steel or equivalent material of adequate strength and stiffness and securely attached to the structure by stays. The method of support and length of stay shall be such that vibration is reduced to a practical minimum. In holds, ladders shall be designed and arranged so that stores handling difficulties are not increased and the risk of damage from stores handling gear is minimized.

***MA for access to ballast tanks and other tanks:***

1. Tanks and subdivisions of tanks having a length of 35 m or more with two access hatchways:

First access hatchway: Inclined ladder or ladders are to be used.

Second access hatchway:

**MODU 1** (cont)

i. A vertical ladder may be used. In such a case where the vertical distance is more than 6 m, vertical ladders are to comprise one or more ladder linking platforms spaced not more than 6 m apart vertically and displaced to one side of the ladder.

The uppermost section of the vertical ladder, measured clear of the overhead obstructions in way of the tank entrance, is not to be less than 2.5 m but not exceed 3.0 m and is to comprise a ladder linking platform which is to be displaced to one side of a vertical ladder. However, the vertical distance of the upper most section of the vertical ladder may be reduced to 1.6 m, measured clear of the overhead obstructions in way of the tank entrance, if the ladder lands on a longitudinal or athwartship permanent means of access fitted within that range; or

ii. Where an inclined ladder or combination of ladders is used for access to the space, the uppermost section of the ladder, measured clear of the overhead obstructions in way of the tank entrance, is to be vertical for not less than 2.5 m but not exceed 3.0m and is to comprise a landing platform continuing with an inclined ladder. However, the vertical distance of the upper most section of the vertical ladder may be reduced to 1.6 m, measured clear of the overhead obstructions in way of the tank entrance, if the ladder lands on a longitudinal or athwartship permanent means of access fitted within that range. The flights of the inclined ladders are normally to be not more than 6 m in vertical height. The lowermost section of the ladders may be vertical for the vertical distance not exceeding 2.5 m.

2. Tanks less than 35 m in length and served by one access hatchway an inclined ladder or combination of ladders are to be used to the space as specified in 1.ii above.

3. In double hull spaces of less than 2.5 m width the access to the space may be by means of vertical ladders that comprises one or more ladder linking platforms spaced not more than 6 m apart vertically and displaced to one side of the ladder. The uppermost section of the vertical ladder, measured clear of the overhead obstructions in way of the tank entrance, is not to be less than 2.5 m but not exceed 3.0 m and is to comprise a ladder linking platform which is to be displaced to one side of a vertical ladder. However, the vertical distance of the upper most section of the vertical ladder may be reduced to 1.6 m, measured clear of the overhead obstructions in way of the tank entrance, if the ladder lands on a longitudinal athwartship permanent means of access fitted within that range. Adjacent sections of the ladder are to be laterally offset from each other by at least the width of the ladder (see paragraph 20 of MSC/Circ.686).

4. Access from deck to a double bottom space may be by means of vertical ladders through a trunk. The vertical distance from deck to a resting platform, between resting platforms or a resting platform and the tank bottom is not to be more than 6 m unless otherwise approved by the Administration.

***MA for inspection of the vertical structure:***

Vertical ladders provided for means of access to the space may be used for access for inspection of the vertical structure.

Unless stated otherwise in Table 1 of MODU TP, vertical ladders that are fitted on vertical structures for inspection are to comprise one or more ladder linking platforms spaced not more than 6 m apart vertically and displace to one side of the ladder. Adjacent sections of ladder are to be laterally offset from each other by at least the width of the ladder (paragraph 20 of MSC/Circ.686).

MODU 1 (cont)

***Obstruction distances***

The minimum distance between the inclined ladder face and obstructions, i.e. 750 mm and, in way of openings, 600 mm specified in MODU TP 3.5 is to be measured perpendicular to the face of the ladder.

**Technical Background**

It is a common practice to use a vertical ladder from deck to the first landing to clear overhead obstructions before continuing to an inclined ladder or a vertical ladder displaced to one side of the first vertical ladder.

**Ref.**

For vertical ladders: Paragraph 20 of the annex to MSC/Circ.686.

3.6 The width of inclined ladders between stringers shall not be less than 400 mm. The treads shall be equally spaced at a distance apart, measured vertically, of between 200 mm and 300 mm. When steel is used, the treads shall be formed of two square bars of not less than 22 mm by 22 mm in section, fitted to form a horizontal step with the edges pointing upward. The treads shall be carried through the side stringers and attached thereto by double continuous welding. All inclined ladders shall be provided with handrails of substantial construction on both sides, fitted at a convenient distance above the treads.

**Interpretation**

1. Vertical height of handrails is not to be less than 890 mm from the centre of the step and two course handrails are to be provided.

2. The requirement of two square bars for treads specified in MODU TP, paragraph 3.6, is based upon the specification of construction of ladders in paragraph 3(e) of Annex 1 to resolution A.272(VIII), which addresses inclined ladders. MODU TP, paragraph 3.4, allows for single rungs fitted to vertical surfaces, which is considered for a safe grip. For vertical ladders, when steel is used, the rungs are to be formed of single square bars of not less than 22 mm by 22 mm for the sake of safe grip.

3. The width of inclined ladders for access to a hold is to be at least 450 mm to comply with the Australian AMSA Marine Orders Part 32, Appendix 17.

4. The width of inclined ladders other than an access to a hold is to be not less than 400 mm.

5. The minimum width of vertical ladders is to be 350 mm and the vertical distance between the rungs is to be equal and is to be between 250 mm and 350 mm.

6. A minimum climbing clearance in width is to be 600 mm other than the ladders placed between the hold frames.

7. The vertical ladders are to be secured at intervals not exceeding 2.5 m apart to prevent vibration.

MODU 1 (cont)

**Technical Background**

- MODU TP, paragraph 3.6, is a continuation of MODU TP, paragraph 3.5, which addresses inclined ladders. Interpretations for vertical ladders are needed based upon the current standards of IMO, AMSA or the industry.
- Interpretations 2 and 5 address vertical ladders based upon the current standards.
- Double square bars for treads become too large for a grip for vertical ladders and single rungs facilitate a safe grip.
- Interpretation 7 is introduced consistently with the requirement and the interpretation of MODU TP, paragraph 3.4.

**Ref.**

- Annex 1 to resolution A.272(VIII).
- Australian AMSA Marine Orders Part 32, Appendix 17.
- ILO Code of Practice "Safety and Health in Dockwork" – Section 3.6 Access to Ship's Holds.

3.7 For vertical ladders or spiral ladders, the width and construction should be in accordance with international or national standards accepted by the Administration.

3.8 No free-standing portable ladder shall be more than 5 m long.

3.9 Alternative means of access include, but are not limited to, such devices as:

.1 hydraulic arm fitted with a stable base;

.2 wire lift platform;

.3 staging;

.4 rafting;

.5 robot arm or remotely operated vehicle (ROV);

.6 portable ladders more than 5 m long shall only be utilized if fitted with a mechanical device to secure the upper end of the ladder;

**Interpretation**

A mechanical device such as hooks for securing at the upper end of a ladder is to be considered as an appropriate securing device if a movement fore/aft and sideways can be prevented at the upper end of the ladder.

**Technical Background**

Innovative design is to be accepted if it fits for the functional requirement with due consideration for safe use.

.7 other means of access, approved by and acceptable to the Administration.

MODU 1 (cont)

Means for safe operation and rigging of such equipment to and from and within the spaces shall be clearly described in the MODU's Structure Access Manual.

3.10 For access through horizontal openings, hatches or manholes, the dimensions shall be sufficient to allow a person wearing a self-contained air-breathing apparatus and protective equipment to ascend or descend any ladder without obstruction and also provide a clear opening to facilitate the hoisting of an injured person from the bottom of a confined space. The minimum clear opening shall not be less than 600 mm x 600 mm. When access to a hold is arranged through a flush manhole in the deck or a hatch, the top of the ladder shall be placed as close as possible to the deck or hatch coaming. Access hatch coamings having a height greater than 900 mm shall also have steps on the outside in conjunction with the ladder.

3.11 For access through vertical openings, or manholes, in swash bulkheads, floors, girders and web frames providing passage through the length and breadth of the space, the minimum clear opening shall be not less than 600 mm x 800 mm at a height of not more than 600 mm from the passage bottom plating unless gratings or other foot holds are provided.

**Interpretation**

See interpretation for sections 2.2.4.1and 2.2.4.2 of 2009 MODU Code.

3.12 The Administration may approve, in special circumstances, smaller dimensions for the openings referred to in paragraphs 3.10 and 3.11, if the ability to traverse such openings or to remove an injured person can be proved to the satisfaction of the Administration.

3.13 Access ladders to large holds and other similar spaces shall be:

.1 Where the vertical distance between the upper surface of adjacent decks or between deck and the bottom of the hold is not more than 6 m, either a vertical ladder or an inclined ladder.

**Interpretation**

Either a vertical or an inclined ladder or a combination of them may be used for access to a large hold where the vertical distance is 6 m or less from the deck to the bottom of the hold.

.2 Where the vertical distance between the upper surface of adjacent decks or between deck and the bottom of the hold is more than 6 m, an inclined ladder or series of inclined ladders at one end of the hold, except the uppermost 2.5 m of a hold measured clear of overhead obstructions and the lowest 6 m may have vertical ladders, provided that the vertical extent of the inclined ladder or ladders connecting the vertical ladders is not less than 2.5 m.

The second means of access at the other end of the hold may be formed of a series of staggered vertical ladders, which should comprise of one or more ladder linking platforms spaced not more than 6 m apart vertically and displaced to one side of the ladder. Adjacent sections of ladder should be laterally offset from each other by at least the width of the ladder. The uppermost entrance section of the ladder directly exposed to a hold should be vertical for a distance of 2.5 m measured clear of overhead obstructions and connected to a ladder-linking platform.

MODU 1 (cont)

**Interpretation**

Adjacent sections of vertical ladder need to be installed so that the following provisions are complied with (refer to figure A and figure B):

- The minimum "lateral offset". between two adjacent sections of vertical ladder, is the distance between the sections, upper and lower, so that the adjacent stringers are spaced of at least 200 mm, measured from half thickness of each stringer.

- Adjacent sections of vertical ladder shall be installed so that the upper end of the lower section is vertically overlapped, in respect to the lower end of the upper section, to a height of 1500 mm in order to permit a safe transfer between ladders.

- No section of the access ladder shall be terminated directly or partly above an access opening.

**Technical Background**

The aims of the above are to:

a. Ensure there is a rest platform at appropriate intervals, reducing the risk of accidents due to tiredness.

b. Reduce the risk of collateral injury from falling or dropping items of equipment, by preventing the lateral overlap of two ladders.

.3 A vertical ladder may be used as a means of access from a deck to a tank or space below, where the vertical distance is 6 m or less between the deck and the longitudinal means of access in the tank or the stringer or the bottom of the space immediately below the entrance. The uppermost entrance section from deck of the vertical ladder of the tank should be vertical for a distance of 2.5 m measured clear of overhead obstructions and comprise a ladder linking platform, unless landing on the longitudinal means of access, the stringer or the bottom within the vertical distance, displaced to one side of a vertical ladder.

.4 Unless allowed in .3 above, an inclined ladder or combination of ladders should be used for access to a tank or a space where the vertical distance is greater than 6 m between the deck and a stringer immediately below the entrance, between stringers, or between the deck or a stringer and the bottom of the space immediately below the entrance.

.5 In case of .4 above, the uppermost entrance section from deck of the ladder should be vertical for a distance of 2.5 m clear of overhead obstructions and connected to a landing platform and continued with an inclined ladder. The flights of inclined ladders should not be more than 9 m in actual length and the vertical height should not normally be more than 6 m. The lowermost section of the ladders may be vertical for a distance of not less than 2.5 m.

.6 In narrow spaces of less than 2.5 m width, the access to the space may be by means of vertical ladders that comprise of one or more ladder linking platforms spaced not more than 6 m apart vertically and displaced to one side of the ladder. Adjacent sections of ladder should be laterally offset from each other by at least the width of the ladder.

MODU 1 (cont)

**Interpretation**

Adjacent sections of vertical ladder need to be installed so that the following provisions are complied with (refer to figure A and figure B):

- The minimum "lateral offset". between two adjacent sections of vertical ladder, is the distance between the sections, upper and lower, so that the adjacent stringers are spaced of at least 200 mm, measured from half thickness of each stringer.

- Adjacent sections of vertical ladder shall be installed so that the upper end of the lower section is vertically overlapped, in respect to the lower end of the upper section, to a height of 1500 mm in order to permit a safe transfer between ladders.

- No section of the access ladder shall be terminated directly or partly above an access opening.

**Technical Background**

The aims of the above are to:

a. Ensure there is a rest platform at appropriate intervals, reducing the risk of accidents due to tiredness.

b. Reduce the risk of collateral injury from falling or dropping items of equipment, by preventing the lateral overlap of two ladders

.7 A spiral ladder is considered acceptable as an alternative for inclined ladders. In this regard, the uppermost 2.5 m can continue to be comprised of the spiral ladder and need not change over to vertical ladders.

3.14 The uppermost entrance section from deck of the vertical ladder providing access to a tank should be vertical for a distance of 2.5 m measured clear of overhead obstructions and comprise a ladder linking platform, displaced to one side of a vertical ladder. The vertical ladder can be between 1.6 m and 3 m below deck structure if it lands on a longitudinal or athwartship permanent means of access fitted within that range.

**Interpretation**

Deck is defined as "weather deck".

MODU 1 (cont)

**Figure "A"**

**Vertical Ladder – Ladder through the linking platform**

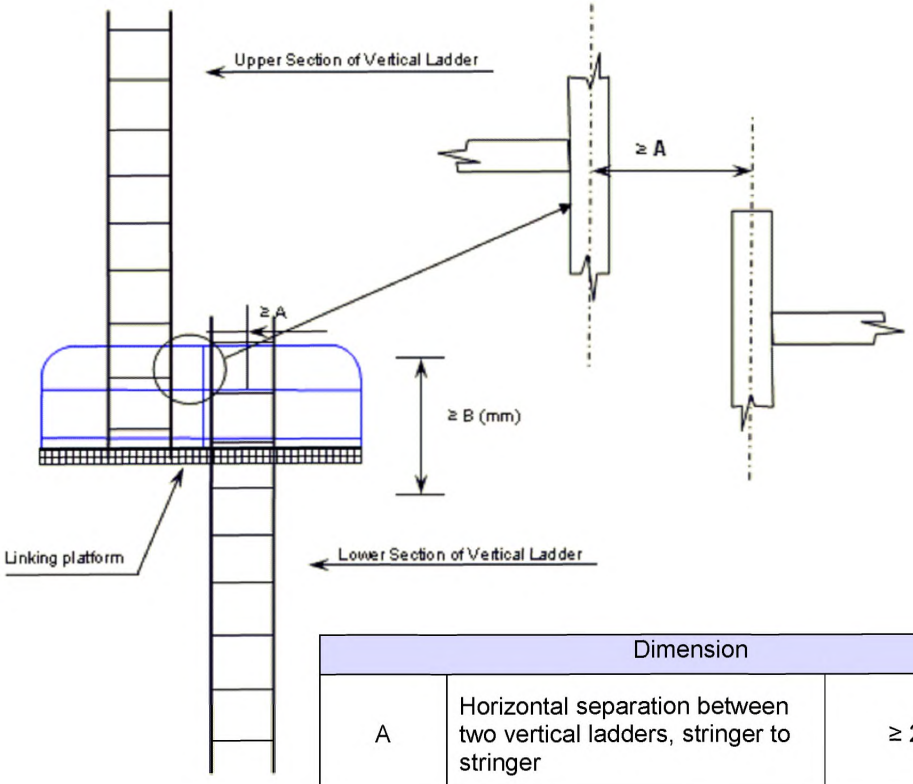


| Dimension | | |
|---|---|---|
| A | Horizontal separation between two vertical ladders, stringer to stringer | ≥ 200 mm |
| B | Stringer height above landing or intermediate platform | ≥ 1500* mm |
| C | Horizontal separation between ladder and platform | 100 mm ≤C< 300 mm |
| *Note: the minimum height of the handrail stanchions of resting platform is of 1000 mm (Technical Provision, resolution MSC.158(78), paragraph 3.3) | | |

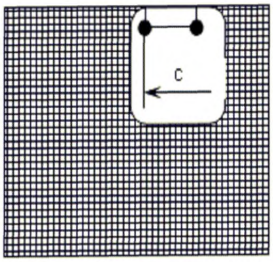

MODU 1 (cont)

**Figure "B"**

**Vertical Ladder – Side mount**

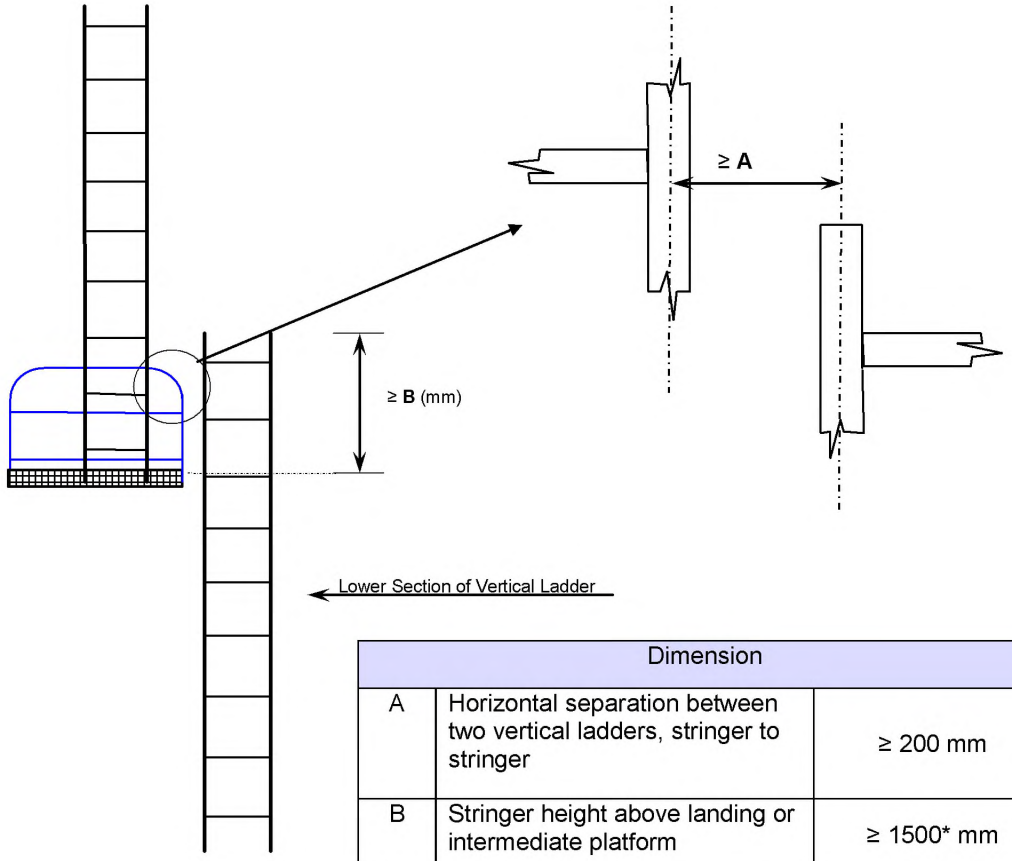


| Dimension | | |
|---|---|---|
| A | Horizontal separation between two vertical ladders, stringer to stringer | ≥ 200 mm |
| B | Stringer height above landing or intermediate platform | ≥ 1500* mm |
| C | Horizontal separation between ladder and platform | 100 mm ≤C< 300 mm |
| *Note: the minimum height of the handrail stanchions of resting platform is of 1000 mm (Technical Provision, resolution MSC.158(78), paragraph 3.3) | | |

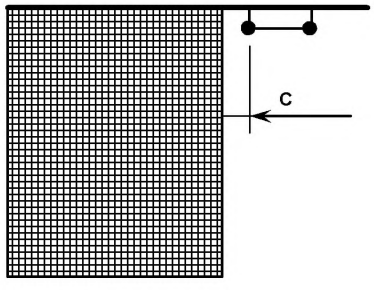

MODU 1 (cont)

**Table 1 - Means of access**

| 1 Water ballast tanks, except those specified in the right column, and other tanks | 2 Water ballast tanks of less than 5 m width |
|---|---|
| **Access to the underdeck and vertical structure** | |
| 1.1 For tanks of which the height is 6 m and over containing internal structures, permanent means of access shall be provided in accordance with .1 to .6: | 2.1 For water ballast tanks of less than 5 m width (including double side spaces above the upper knuckle point of the bilge hopper sections in surface units), permanent means of access are to be provided in accordance with .1 to .3: |
| .1 continuous athwartship permanent access arranged at each transverse bulkhead on the stiffened surface, at a minimum of 1.6 m to a maximum of 3 m below the deck head; | .1 where the vertical distance between horizontal uppermost stringer and deck head is 6 m or more, one continuous longitudinal permanent means of access shall be provided for the full length of the tank with a means to allow passing through transverse webs installed at a minimum of 1.6 m to a maximum of 3 m below the deck head with a vertical access ladder at each end of the tank; |
| .2 at least one continuous longitudinal permanent means of access at each side of the tank. One of these accesses shall be at a minimum of 1.6 m to a maximum of 6 m below the deck head and the other shall be at a minimum of 1.6 m to a maximum of 3 m below the deck head; | .2 continuous longitudinal permanent means of access, which are integrated in the structure, at a vertical distance not exceeding 6 m apart; and |
| .3 access between the arrangements specified in .1 and .2 and from the deck above the tanks to either .1 or .2; | .3 plated stringers shall, as far as possible, be in alignment with horizontal girders of transverse bulkheads. |
| .4 continuous longitudinal permanent means of access which are integrated in the structural member on the stiffened surface of a longitudinal bulkhead, in alignment, where possible, with horizontal girders of transverse bulkheads are to be provided for access to the transverse webs unless permanent fittings are installed at the uppermost platform for use of alternative means, as defined in paragraph 3.9 of the MODU Technical provisions, for inspection at intermediate heights; | 2.2 For pre-load tanks in self-elevating units, reference is made to 1.3. |

MODU 1 (cont)

| 1 Water ballast tanks, except those specified in the right column, and other tanks | 2 Water ballast tanks of less than 5 m width |
|---|---|
| **Access to the underdeck and vertical structure** | |
| .5 for MODUs having cross-ties which are 6 m or more above tank bottom, a transverse permanent means of access on the cross-ties providing inspection of the tie flaring brackets at both sides of the tank, with access from one of the longitudinal permanent means of access in .4; and | 2.3 For ballast tanks in columns of column-stabilized units of which the vertical distance between each watertight flat or between horizontal stringers/non-tight flats is 6 m and over, one permanent means of access shall be provided for the full length of the tank in accordance with 2.1. (Note: In columns, longitudinal means the perimetral direction of the column and transversal means the radial direction of the column) |
| .6 alternative means as defined in paragraph 3.9 of the Technical provisions may be provided as an alternative to .4 for tanks other than ballast tanks of which the height is less than 17 m. | **For surface units (ship- or barge-type) and pontoons in column-stabilized units:**<br><br>2.4 For bilge hopper sections of which the vertical distance from the tank bottom to the upper knuckle point is 6 m and over, one longitudinal permanent means of access shall be provided for the full length of the tank. It shall be accessible by vertical permanent means of access at each end of the tank. |
| 1.2 For tanks of which the height is less than 6 m, alternative means as defined in paragraph 3.9 of the Technical provisions or portable means may be utilized in lieu of the permanent means of access. | 2.4.1 The longitudinal continuous permanent means of access may be installed at a minimum 1.6 m to maximum 3 m from the top of the bilge hopper section. In this case, a platform extending the longitudinal continuous permanent means of access in way of the webframe may be used to access the identified structural critical areas. |
| 1.3 Pre-load tanks in self-elevating units are normally kept empty for a long duration when the unit is in elevated mode. For such tanks if due to their shape it is not practicable to fit permanent means of access mentioned in 1.1 above, the Administration may permit the provision of alternative means defined in paragraph 3.9 of the Technical provisions provided that the tank height is less than 17 m. | 2.4.2 Alternatively, the continuous longitudinal permanent means of access may be installed at a minimum of 1.2 m below the top of the clear opening of the web ring allowing a use of portable means of access to reach identified structural critical areas. |

MODU 1 (cont)

| 1 Water ballast tanks, except those specified in the right column, and other tanks | 2 Water ballast tanks of less than 5 m width |
|---|---|
| **Access to the underdeck and vertical structure** | |
| 1.4 For ballast tanks in columns of column-stabilized units, longitudinal means the perimetral direction of the column and transversal means the radial direction of the column. | 2.5 Where the vertical distance referred to in 2.4 is less than 6 m, alternative means as defined in paragraph 3.9 of the Technical provisions or portable means of access may be utilised in lieu of the permanent means of access. To facilitate the operation of the alternative means of access, in-line openings in horizontal stringers shall be provided. The openings shall be of an adequate diameter and shall have suitable protective railings. |
| **Fore and aft peak tanks in surface units**<br><br>1.5 For fore and aft peak tanks with a depth of 6 m or more at the centre line of the collision and aft end bulkheads, a suitable means of access shall be provided for access to critical areas such as the underdeck structure, stringers, collision and aft end bulkheads and side shell structure. | |
| 1.5.1 Stringers of less than 6 m in vertical distance from the deck head or a stringer immediately above are considered to provide suitable access in combination with portable means of access. | |
| 1.5.2 In case the vertical distance between the deck head and stringers, stringers or the lowest stringer and the tank bottom is 6 m or more, alternative means of access as defined in paragraph 3.9 of the Technical provisions shall be provided. | |

MODU 1 (cont)

| 3 Holds | 4 Critical Structural Areas |
|---|---|
| **Access to underdeck structure**<br><br>3.1 For holds under main deck of which the height is 6 m and over, permanent means of access shall be fitted to provide access to the overhead structure at both sides of the cross deck and in the vicinity of the centreline. Each means of access shall be accessible from the hold access or directly from the main deck and installed at a minimum of 1.6 m to a maximum of 3 m below the deck. | 4.1 Permanent means of access shall be fitted to provide access to overhead and vertical structures identified as critical structural areas as defined in 2009 MODU Code, paragraph 2.2.3.2 and located at a height of 6 m or more from the bottom of the space. |
| 3.2 An athwartship permanent means of access fitted on the transverse bulkhead at a minimum 1.6 m to a maximum 3 m below the cross-deck head is accepted as equivalent to 3.1. | 4.1.1 When permanent means of access to critical structural areas are not covered by sections 1, 2 and 3 above, continuous permanent access arranged at the bulkhead on the stiffened surface is to be provided at a maximum of 3 m below the critical structural area, but not higher than 1.6 m below the deck, throughout the extent of the critical structural area. |
| 3.3 Access to the permanent means of access to overhead structure of the cross deck may also be via the uppermost stringer. | 4.2 For critical structural areas located at a height of less than 6 m from the bottom of the space, alternative means of access as defined in paragraph 3.9 of the Technical provisions are to be provided. |
| 3.4 Alternatively, movable means of access as defined in paragraph 3.9 of the MODU Technical provisions, may be utilized for access to the overhead structure of the cross deck if its vertical distance is 17 m or less above the bottom of the hold. | 4.3 Suitable means of access into the interior of the horizontal braces in column stabilized units shall be provided. For access through vertical openings, the requirements of 3.11 of the Technical provisions shall be applied. |

MODU 1 (cont)

**Appendix 1 Unified Interpretation of IMO Resolution 133(76) as applicable for MODUs**

**Table 1 – Means of access, paragraph 1.1**

**1. Water ballast tanks, except those specified in the right column, and other tanks**

***Access to the underdeck and vertical structure***

1.1 For tanks of which the height is 6 m and over containing internal structures, permanent means of access shall be provided in accordance with .1 to .6:

**Interpretation**

1. For tanks containing oil products other than crude oil (e.g. fuel oil, diesel oil, base oil) where lower corrosion is expected, section 1.1 of Table 1 is not to be applied. For tanks containing products considered corrosive (e.g. brine, drilling mud), section 1.1 is to be applied.

2. Sub-paragraphs .1, .2 and .3 define access to underdeck structure, access to the uppermost sections of transverse webs and connection between these structures.

3. Sub-paragraphs .4, .5 and .6 define access to vertical structures only and are linked to the presence of transverse webs on longitudinal bulkheads.

4. If there are no underdeck structures (deck longitudinals and deck transverses) but there are vertical structures in the tank supporting transverse and longitudinal bulkheads, access in accordance with sub-paragraphs from .1 through to .6 is to be provided for inspection of the upper parts of vertical structure on transverse and longitudinal bulkheads.

5. If there is no structure in the tank, section 1.1 of Table 1 is not to be applied.

6. The vertical distance below the overhead structure is to be measured from the underside of the main deck plating to the top of the platform of the means of access at a given location.

7. The height of the tank is to be measured at each tank. For a tank the height of which varies at different bays, item 1.1 is to be applied to such bays of a tank that have height 6 m and over.

**Technical Background**

Interpretation 7: If the height of the tank is increasing along the length of a unit, the permanent means of access is to be provided locally where the height is above 6 m.

**Ref.**

Paragraph 10 of the annex to MSC/Circ.686.

MODU 1 (cont)

**Appendix 1 Unified Interpretation of IMO Resolution 133(76) as applicable for MODUs**

**Table 1 – Means of access, paragraph 1.1.2**

1.1.2 at least one continuous longitudinal permanent means of access at each side of the tank. One of these accesses shall be at a minimum of 1.6 m to a maximum of 6 m below the deck head and the other shall be at a minimum of 1.6 m to a maximum of 3 m below the deck head;

**Interpretation**

There is need to provide continuous longitudinal permanent means of access when the deck longitudinals and deck transverses are fitted on deck but supporting brackets are fitted under the deck.

MODU 1 (cont)

## Appendix 1 Unified Interpretation of IMO Resolution 133(76) as applicable for MODUs

### Table 1 – Means of access, paragraph 1.1.3

1.1.3 access between the arrangements specified in .1 and .2 and from the main deck to either .1 or .2.

**Interpretation**

Means of access to tanks may be used for access to the permanent means of access for inspection.

**Technical Background**

As a matter of principle, in such a case where the means of access can be utilised for the purpose of accessing structural members for inspection there is no need of duplicated installation of the MA.

MODU 1 (cont)

**Appendix 1 Unified Interpretation of IMO Resolution 133(76) as applicable for MODUs**

**Table 1 – Means of access, paragraph 1.1.4**

1.1.4 continuous longitudinal permanent means of access which are integrated in the structural member on the stiffened surface of a longitudinal bulkhead, in alignment, where possible, with horizontal girders of transverse bulkheads are to be provided for access to the transverse webs unless permanent fittings are installed at the uppermost platform for use of alternative means as defined in paragraph 3.9 of the MODU Technical provisions for inspection at intermediate heights;

**Interpretation**

The permanent fittings required to serve alternative means of access such as wire lift platform, that are to be used by crew and surveyors for inspection shall provide at least an equal level of safety as the permanent means of access stated by the same paragraph. These means of access shall be carried on board the unit and be readily available for use without filling of water in the tank.

Therefore, rafting is not to be acceptable under this provision.

Alternative means of access are to be part of Access Manual which is to be approved on behalf of the flag State.

MODU 1 (cont)

**Appendix 1 Unified Interpretation of IMO Resolution 133(76) as applicable for MODUs**

**Table 1 – Means of access paragraph 2.1**

**2. Water ballast tanks of less than 5 m width**

***Access to the underdeck and vertical structure***

2.1 For water ballast tanks of less than 5 m width (including *double side spaces above the upper knuckle* point of the bilge hopper sections in surface units), permanent means of access are to be provided in accordance with .1 and .3:

**Interpretation**

Paragraph 2.1.1 represents requirements for access to underdeck structures, while paragraph 2.1.2 is a requirement for access for survey and inspection of vertical structures on longitudinal bulkheads (transverse webs).

**Technical Background**

MA or portable means of access are necessary arrangement to facilitate inspection of the structural condition of the space and the boundary structure.

MODU 1 (cont)

## Appendix 1 Unified Interpretation of IMO Resolution 133(76) as applicable for MODUs

### Table 1 – Means of access, paragraph 2.1.1

**2. Water ballast tanks of less than 5 m width**

2.1.1 where the vertical distance between horizontal uppermost stringer and deck head is 6 m or more, one continuous permanent means of access shall be provided for the full length of the tank with a means to allow passing through transverse webs installed a minimum of 1.6 m to a maximum of 3 m below the deck head with a vertical access ladder at each end of tank;

**Interpretation**

1. For a tank, the vertical distance between horizontal upper stringer and deck head of which varies at different sections, item 2.1.1 is to be applied to such sections that fall under the criteria.

2. The continuous permanent means of access may be a wide longitudinal, which provides access to critical details on the opposite side by means of platforms as necessary on web frames. In case the vertical opening of the web frame is located in way of the open part between the wide longitudinal and the longitudinal on the opposite side, platforms shall be provided on both sides of the web frames to allow safe passage through the web frame.

3. Where two access hatches are required by 2009 MODU Code, section 2.2.2.2, access ladders at each end of the tank are to lead to the deck.

**Technical Background**

Interpretation 1: The interpretation of varied tank height in item 1 of Table 1 is applied to the vertical distance between horizontal upper stringer and deck head for consistency.

MODU 1 (cont)

**Appendix 1 Unified Interpretation of IMO Resolution 133(76) as applicable for MODUs**

**Table 1 – Means of access, paragraph 2.1.2**

2.1.2 continuous longitudinal permanent means of access, which are integrated in the structure, at a vertical distance not exceeding 6 m apart; and

**Interpretation**

The continuous permanent means of access may be a wide longitudinal, which provides access to critical details on the opposite side by means of platforms as necessary on webframes. In case the vertical opening of the web is located in way of the open part between the wide longitudinal and the longitudinal on the opposite side, platforms shall be provided on both sides of the web to allow safe passage through the web.

A "reasonable deviation", as noted in MODU TP, paragraph 1.4, of not more than 10% may be applied where the permanent means of access is integral with the structure itself.

MODU 1 (cont)

**Appendix 1 Unified Interpretation of IMO Resolution 133(76) as applicable for MODUs**

**Table 1 – Means of access, paragraph 2.2**

**For surface units (ship- or barge-type) and pontoons in column-stabilized units:**

2.2 For bilge hopper sections of which the vertical distance from the tank bottom to the upper knuckle point is 6 m and over, one longitudinal permanent means of access shall be provided for the full length of the tank. It shall be accessible by vertical permanent means of access at both ends of the tank.

**Interpretation**

1. Permanent means of access between the longitudinal continuous permanent means of access and the bottom of the space is to be provided.

2. The height of a bilge hopper tank located outside of the parallel part of the unit is to be taken as the maximum of the clear vertical distance measured from the bottom plating to the hopper plating of the tank.

3. The foremost and aftmost bilge hopper ballast tanks with raised bottom, of which the height is 6 m and over, a combination of transverse and vertical MA for access to the upper knuckle point for each transverse web is to be accepted in place of the longitudinal permanent means of access.

**Technical Background**

Interpretation 2: The bilge hopper tanks at fore and aft of unit's hull narrow due to raised bottom plating and the actual vertical distance from the bottom of the tank to hopper plating of the tank is more appropriate to judge if a portable means of access could be utilized for the purpose.

Interpretation 3: in the foremost or aftmost bilge hopper tanks where the vertical distance is 6 m or over but installation of longitudinal permanent means of access is not practicable permanent means of access of combination of transverse and vertical ladders provides an alternative means of access to the upper knuckle point.

MODU 1 (cont)

**Appendix 1 Unified Interpretation of IMO Resolution 133(76) as applicable for MODUs**

**Table 1 – Means of access, paragraph 3.1**

**3.1 Holds**

***Access to underdeck structure***

3.1 For holds under main deck of which the height is 6 m or over, permanent means of access shall be fitted to provide access to the overhead structure at both sides of the cross deck and in the vicinity of the centreline. Each means of access shall be accessible from the hold access or directly from the main deck and installed at a minimum of 1.6 m to a maximum of 3 m below the deck.

**Interpretation**

1. Means of access shall be provided to the crossdeck structures of the foremost and aftermost part of the each hold.

2. Interconnected means of access under the cross deck for access to three locations at both sides and in the vicinity of the centreline is to be acceptable as the three means of access.

3. Permanent means of access fitted at three separate locations accessible independently, one at each side and one in the vicinity of the centreline is to be acceptable.

4. Special attention is to be paid to the structural strength where any access opening is provided in the main deck or cross deck.

**Technical Background**

Pragmatic arrangements of the MA are provided.

MODU 1 (cont)

**Appendix 1 Unified Interpretation of IMO Resolution 133(76) as applicable for MODUs**

**Table 1 – Means of access, paragraph 3.3**

3.3 Access to the permanent means of access to overhead structure of the cross deck may also be via the uppermost stringer.

**Interpretation**

Particular attention is to be paid to preserve the structural strength in way of access opening provided in the main deck or cross deck.

MODU 1 (cont)

**Appendix 1 Unified Interpretation of IMO Resolution 133(76) as applicable for MODUs**

**Table 1 – Means of access, paragraph 3.4**

3.4 Alternatively, movable means of access as defined in paragraph 3.9 of the MODU Technical provisions may be utilized for access to the overhead structure of cross deck if its vertical distance is 17 m or less above the bottom of the hold.

**Interpretation**

The movable means of access to the underdeck structure of cross deck need not necessarily be carried on board the unit. It is sufficient if it is made available when needed.

End of Document

# РЕКОМЕНДАЦИИ МАКО

# IACS RECOMMENDATIONS

# No.47 Shipbuilding and Repair Quality Standard

(1996)
(Rev. 1, 1999)
(Rev.2, Dec. 2004)
(Rev.3, Nov. 2006)
(Rev.4, Aug. 2008)
(Rev.5, Oct. 2010)
(Rev.6, May 2012)
(Rev.7, June 2013)

**Part A Shipbuilding and Remedial Quality Standard for New Construction**

**Part B Repair Quality Standard for Existing Ships**

## PART A - SHIPBUILDING AND REMEDIAL QUALITY STANDARDS FOR NEW CONSTRUCTION


**1. Scope**
**2. General requirements for new construction**
**3. Qualification of personnel and procedures**
- 3.1 Qualification of welders
- 3.2 Qualification of welding procedures
- 3.3 Qualification of NDE operators

**4. Materials**
- 4.1 Materials for structural members
- 4.2 Surface conditions

**5. Gas Cutting**
**6. Fabrication and fairness**
- 6.1 Flanged longitudinals and flanged brackets
- 6.2 Built-up sections
- 6.3 Corrugated bulkheads
- 6.4 Pillars, brackets and stiffeners
- 6.5 Maximum heating temperature on surface for line heating
- 6.6 Block assembly
- 6.7 Special sub-assembly
- 6.8 Shape
- 6.9 Fairness of plating between frames
- 6.10 Fairness of plating with frames
- 6.11 Preheating for welding hull steels at low temperature

**7. Alignment**
**8. Welding Joint Details**
- 8.1 Typical butt weld plate edge preparation (manual welding and semi-automatic welding)
- 8.2 Typical fillet weld plate edge preparation (manual welding and semi-automatic welding)
- 8.3 Butt and fillet weld profile (manual welding and semi-automatic welding)
- 8.4 Typical butt weld edge preparation (Automatic welding)
- 8.5 Distance between welds

**9. Remedial**
- 9.1 Typical misalignment remedial
- 9.2 Typical butt weld plate edge preparation remedial (manual welding and semi-automatic welding)
- 9.3 Typical fillet weld plate edge preparation remedial (manual welding and semi-automatic welding)
- 9.4 Typical fillet and butt weld profile remedial (manual welding and semi-automatic welding)
- 9.5 Distance between welds remedial
- 9.6 Erroneous hole remedial
- 9.7 Remedial by insert plate
- 9.8 Weld surface remedial
- 9.9 Weld remedial (short bead)

**REFERENCES**


1. IACS "Bulk Carriers - Guidelines for Surveys, Assessment and Repair of Hull Structure"
2. TSCF "Guidelines for the inspection and maintenance of double hull tanker structures"
3. TSCF "Guidance manual for the inspection and condition assessment of tanker structures"
4. IACS UR W7 "Hull and machinery steel forgings"
5. IACS UR W8 "Hull and machinery steel castings"
6. IACS UR W11 "Normal and higher strength hull structural steel"
7. IACS UR W13 "Thickness tolerances of steel plates and wide flats"
8. IACS UR W14 "Steel plates and wide flats with specified minimum through thickness properties ("Z" quality)"
9. IACS UR W17 "Approval of consumables for welding normal and higher strength hull structural steels"
10. IACS UR W28 "Welding procedure qualification tests of steels for hull construction and marine structures"
11. IACS UR Z10.1 "Hull surveys of oil tankers" and Z10.2 "Hull surveys of bulk carriers" Annex I
12. IACS UR Z23 "Hull survey for new construction"
13. IACS Recommendation No. 12 "Guidelines for surface finish of hot rolled plates and wide flats"
14. IACS Recommendation No. 20 "Non-destructive testing of ship hull steel welds"

## 1. Scope

It is intended that these standards provide guidance where established and recognized shipbuilding or national standards accepted by the Classification Society do not exist.

1.1 This standard provides guidance on shipbuilding quality standards for the hull structure during new construction and the remedial standard where the quality standard is not met.

Whereas the standard generally applies to

- conventional merchant ship types,
- parts of hull covered by the rules of the Classification Society,
- hull structures constructed from normal and higher strength hull structural steel,

the applicability of the standard is in each case to be agreed upon by the Classification Society.

The standard does generally not apply to the new construction of

- special types of ships as e.g. gas tankers
- structures fabricated from stainless steel or other, special types or grades of steel

1.2 In this standard, both a "Standard" range and a "Limit" range are listed. The "Standard" range represents the target range expected to be met in regular work under normal circumstances. The "Limit" range represents the maximum allowable deviation from the "Standard" range. Work beyond the "Standard" range but within the "Limit" range is acceptable. In cases where no 'limit' value is specified, the value beyond the 'standard' range may be accepted subject to the consideration of the Classification Society.

1.3 The standard covers typical construction methods and gives guidance on quality standards for the most important aspects of such construction. Unless explicitly stated elsewhere in the standard, the level of workmanship reflected herein will in principle be acceptable for primary and secondary structure of conventional designs. A more stringent standard may however be required for critical and highly stressed areas of the hull, and this is to be agreed with the Classification Society in each case. In assessing the criticality of hull structure and structural components, reference is made to ref. 1, 2 and 3.

1.4 Details relevant to structures or fabrication procedures not covered by this standard are to be approved by the Classification Society on the basis of procedure qualifications and/or recognized national standards.

1.5 For use of this standard, fabrication fit-ups, deflections and similar quality attributes are intended to be uniformly distributed about the nominal values. The shipyard is to take corrective action to improve work processes that produce measurements where a skew distribution is evident. Relying upon remedial steps that truncate a skewed distribution of the quality attribute is unacceptable.

## 2. General requirements for new construction

2.1 In general, the work is to be carried out in accordance with the Classification Society rules and under the supervision of the Surveyor to the Classification Society

2.2 Welding operations are to be carried out in accordance with work instructions accepted by the Classification Society.

2.3 Welding of hull structures is to be carried out by qualified welders, according to approved and qualified welding procedures and with welding consumables approved by the Classification Society, see Section 3. Welding operations are to be carried out under proper supervision by the shipbuilder. The working conditions for welding are to be monitored by the Classification Society in accordance with UR Z23.

## 3. Qualification of personnel and procedures

### 3.1 Qualification of welders

3.1.1 Welders are to be qualified in accordance with the procedures of the Classification Society or to a recognized national or international standard. Recognition of other standards is subject to submission to the

Classification Society for evaluation. Subcontractors are to keep records of welders qualification and, when required, furnish valid approval test certificates.

3.1.2 Welding operators using fully mechanized or fully automatic processes need generally not pass approval testing provided that the production welds made by the operators are of the required quality. However, operators are to receive adequate training in setting or programming and operating the equipment. Records of training and operation experience shall be maintained on individual operator's files and records, and be made available to the Classification Society for inspection when requested.

### 3.2 Qualification of welding procedures

Welding procedures are to be qualified in accordance with URW28 or other recognized standard accepted by the Classification Society.

### 3.3 Qualification of NDE operators

Personnel performing non-destructive examination for the purpose of assessing quality of welds in connection with new construction covered by this standard, are to be qualified in accordance with Classification Society rules or to a recognized international or national qualification scheme. Records of operators and their current certificates are to be kept and made available to the Surveyor for inspection.

## 4. Materials

### 4.1 Materials for Structural Members

All materials, including weld consumables, to be used for the structural members are to be approved by the Classification Society as per the approved construction drawings and meet the respective IACS Unified Requirements. Additional recommendations are contained in the following paragraphs.

All materials used should be manufactured at a works approved by the Classification Society for the type and grade supplied.

### 4.2 Surface Conditions

#### 4.2.1 Definitions

| | |
|---|---|
| Minor Imperfections: | Pitting, rolled-in scale, indentations, roll marks, scratches and grooves |
| Defects: | Cracks, shells, sand patches, sharp edged seams and minor imperfections exceeding the limits of table 1 |
| Depth of Imperfections or defects: | The depth is to be measured from the surface of the product |

#### 4.2.2 Acceptance without remedies

Minor imperfections, in accordance with the nominal thickness (t) of the product and the limits described in Table 1, are permissible and may be left as they are.

| Imperfection surface area Ratio(%) | 15~20% | 5~15% | 0~5% |
|---|---|---|---|
| t < 20 mm | 0.2 mm | 0.4 mm | 0.5 mm |
| 20 mm ≤ t < 50 mm | 0.2 mm | 0.6 mm | 0.7 mm |
| 50 mm ≤ t | 0.2 mm | 0.7 mm | 0.9 mm |

**Table 1 Limits for depth of minor imperfection, for acceptance without remedies**

Imperfection surface area Ratio (%) is obtained as influenced area / area under consideration (i.e. plate surface area) x 100%.
For isolated surface discontinuities, influenced area is obtained by drawing a continuous line which follows the circumference of the discontinuity at a distance of 20 mm. (Figure 1)
For surface discontinuities appearing in a cluster, influenced area is obtained by drawing a continuous line which follows the circumference of the cluster at a distance of 20 mm. (Figure 2)

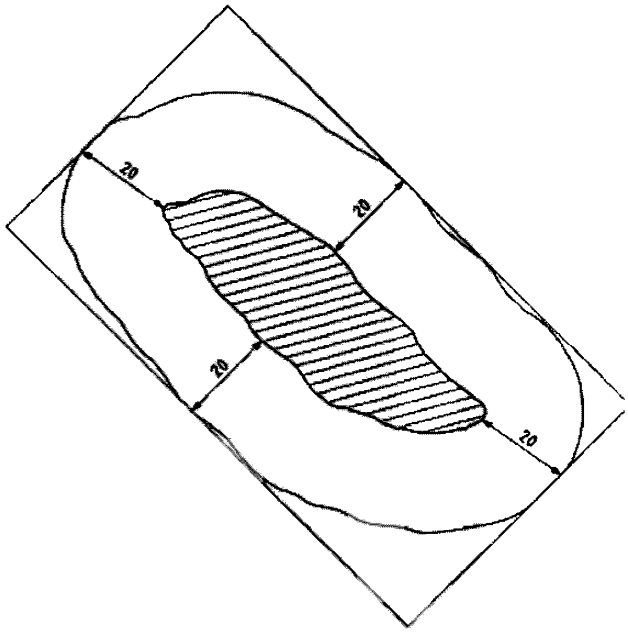


Figure 1 - Determination of the area influenced by an isolated discontinuity
(Ref. Nr. EN 10163-1:2004+AC:2007 E)

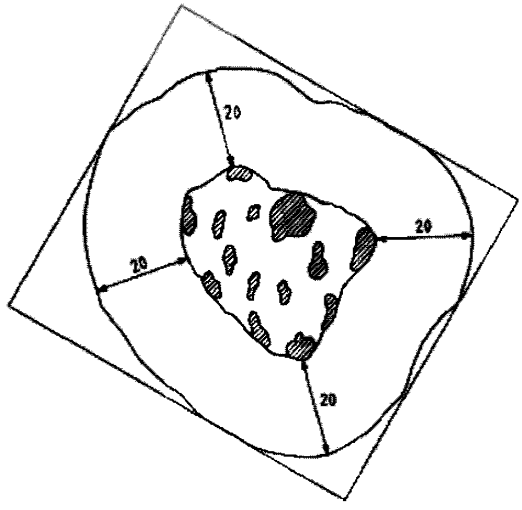


Figure 2 - Determination of the area influenced by clustered discontinuities
(Ref. Nr. EN 10163-1:2004+AC:2007 E)

### 4.2.3 Remedial of Defects

Defects are to be remedied by grinding and/or welding in accordance with IACS Rec.12.

### 4.2.4 Further Defects

#### 4.2.4.1 Lamination

Investigation to be carried out at the steelmill into the cause and extent of the detected laminations. Severe lamination is to be remedied by local insert plates. The minimum breadth or length of the plate to be replaced is to be:

- 1600 mm for shell and strength deck plating in way of cruciform or T-joints,
- 800 mm for shell, strength deck plating and other primary members,
- 300 mm for other structural members.

Local limited lamination may be remedied by chipping and/or grinding followed by welding in accordance with sketch (a). In case where the local limited lamination is near the plate surface, the remedial may be carried out as shown in sketch (b). For limitations see paragraph 4.2.2.

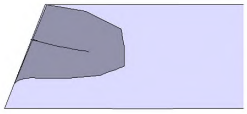

(a)

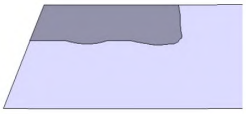

(b)

#### 4.2.4.2 Weld Spatters

Loose weld spatters are to be removed by grinding or other measures to clean metal surface (see Table 9.13), as required by the paint system, on:

- shell plating
- deck plating on exposed decks
- in tanks for chemical cargoes
- in tanks for fresh water and for drinking water
- in tanks for lubricating oil, hydraulic oil, including service tanks

## 5. Gas Cutting

The roughness of the cut edges is to meet the following requirements:

**Free Edges:**

| | **Standard** | **Limit** |
|---|---|---|
| Strength Members | 150 μm | 300 μm |
| Others | 500 μm | 1000 μm |

**Welding Edges:**

| | **Standard** | **Limit** |
|---|---|---|
| Strength Members | 400 μm | 800 μm |
| Others | 800 μm | 1500 μm |

## 6. Fabrication and fairness

6.1 Flanged longitudinals and flanged brackets (see Table 6.1)
6.2 Built-up sections (see Table 6.2)

6.3 Corrugated bulkheads (see Table 6.3)
6.4 Pillars, brackets and stiffeners (see Table 6.4)
6.5 Maximum heating temperature on surface for line heating (see Table 6.5)
6.6 Block assembly (see Table 6.6)
6.7 Special sub-assembly (see Table 6.7)
6.8 Shape (see Table 6.8 and 6.9)
6.9 Fairness of plating between frames (see Table 6.10)
6.10 Fairness of plating with frames (see Table 6.11)
6.11 Preheating for welding hull steels at low temperature (See Table 6.12)

## 7. Alignment

The quality standards for alignment of hull structural components during new construction are shown in Tables 7.1, 7.2 and 7.3. The Classification Society may require a closer construction tolerance in areas requiring special attention, as follows:

- Regions exposed to high stress concentrations
- Fatigue prone areas
- Detail design block erection joints
- High tensile steel regions

## 8. Welding Joint Details

Edge preparation is to be qualified in accordance with URW28 or other recognized standard accepted by the Classification Society.

Some typical edge preparations are shown in Table 8.1, 8.2, 8.3, 8.4 and 8.6 for reference.

8.1 Typical butt weld plate edge preparation (manual and semi-automatic welding) for reference - see Table 8.1 and 8.2
8.2 Typical fillet weld plate edge preparation (manual and semi-automatic welding) for reference - see Table 8.3 and 8.4
8.3 Butt and fillet weld profile (manual and semi-automatic welding) - see Table 8.5
8.4 Typical butt weld plate edge preparation (Automatic welding) for reference - see Table 8.6
8.5 Distance between welds - see Table 8.7

## 9. Remedial

All the major remedial work is subject to reporting by shipbuilder to the Classification Society for approval in accordance with their work instruction for new building.

Some typical remedial works are shown in Tables 9.1 to 9.13.

9.1 Typical misalignment remedial - see Tables 9.1 to 9.3
9.2 Typical butt weld plate edge preparation remedial (manual and semi-automatic welding) - see Table 9.4 and 9.5
9.3 Typical fillet weld plate edge preparation remedial (manual and semi-automatic welding) - see Tables 9.6 to 9.8
9.4 Typical fillet and butt weld profile remedial (manual and semi-automatic welding) - see Table 9.9
9.5 Distance between welds remedial - see Table 9.10
9.6 Erroneous hole remedial - see Table 9.11
9.7 Remedial by insert plate - see Table 9.12
9.8 Weld surface remedial - see Table 9.13
9.9 Weld remedial (short bead) - see Table 9.14

**TABLE 6.1 – Flanged Longitudinals and Flanged Brackets**

| Detail | Standard | Limit | Remarks |
|---|---|---|---|
| Breadth of flange<br>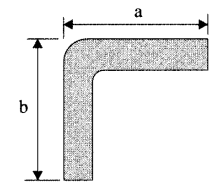<br><br>compared to correct size | ± 3 mm | ± 5 mm | |
| Angle between flange and web<br>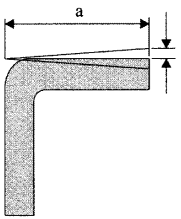<br><br>compared to template | ± 3 mm | ± 5 mm | per 100 mm of a |
| Straightness in plane of flange and web<br>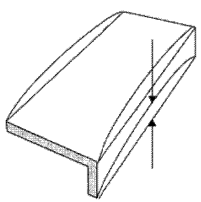<br>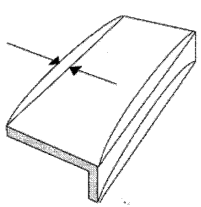 | ± 10 mm | ± 25 mm | per 10 m |

**TABLE 6.2 – Built Up Sections**

| Detail | Standard | Limit | Remarks |
|---|---|---|---|
| Frames and longitudinal 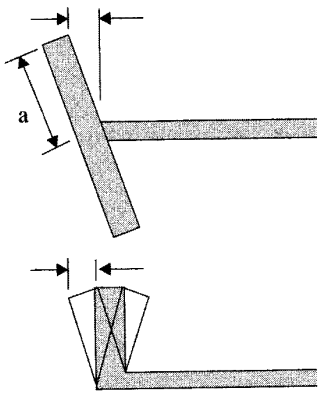  | ± 1.5 mm | ± 3 mm | per 100 mm of a |
| Distortion of face plate 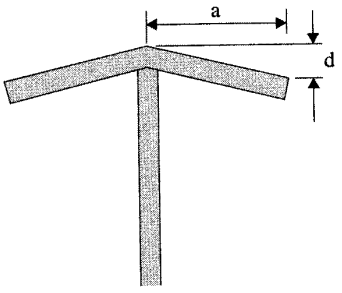  | $d \leq 3 + a/100$ mm | $d \leq 5 + a/100$ mm | |
| Distortion in plane of web and flange of built up longitudinal frame, transverse frame, girder and transverse web. 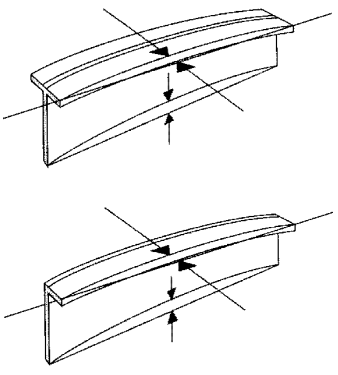 | ± 10 mm | ± 25 mm | per 10 m in length |

**TABLE 6.3 – Corrugated Bulkheads**

| Detail | Standard | Limit | Remarks |
|---|---|---|---|
| Mechanical bending<br>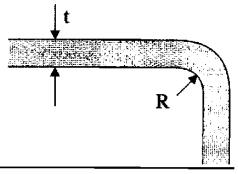 | R ≥ 3t mm<br>R ≥ 4.5t mm for CSR ships [Note 1] | 2t mm [Note 2] | Material to be suitable for cold flanging (forming) and welding in way of radius |
| Depth of corrugation<br>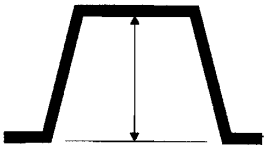 | ± 3 mm | ± 6 mm | |
| Breadth of corrugation<br>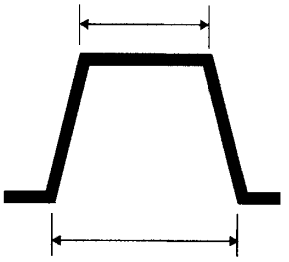 | ± 3 mm | ± 6 mm | |
| Pitch and depth of swedged corrugated bulkhead compared with correct value<br>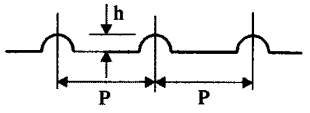 | h : ± 2.5 mm<br><br>Where it is not aligned with other bulkheads<br>P : ± 6 mm<br><br>Where it is aligned with other bulkheads<br>P : ± 2 mm | h : ± 5 mm<br><br>Where it is not aligned with other bulkheads<br>P : ± 9 mm<br><br>Where it is aligned with other bulkheads<br>P : ± 3 mm | |
| | | | |

**Notes:**

1. For CSR Bulk Carriers built under the "Common Structural Rules for Bulk Carriers" with the effective dates of 1 July 2010 and 1 July 2012, the standard is R≥2t mm.
2. For CSR ships, the allowable inside bending radius of cold formed plating may be reduced provided the following requirements are complied with.

When the inside bending radius is reduced below 4.5 times the as-built plate thickness, supporting data is to be provided. The bending radius is in no case to be less than 2 times the as-built plate thickness. As a minimum, the following additional requirements are to be complied with:

a) For all bent plates:

- 100% visual inspection of the bent area is to be carried out.
- Random checks by magnetic particle testing are to be carried out.

b) In addition to a), for corrugated bulkheads subject to lateral liquid pressure:

- The steel is to be of Grade D/DH or higher.

The material is impact tested in the strain-aged condition and satisfies the requirements stated herein. The deformation is to be equal to the maximum deformation to be applied during production, calculated by the formula $t_{as\text{-}built}/(2r_{bdg} + t_{as\text{-}built})$, where $t_{as\text{-}built}$ is the as-built thickness of the plate material and $r_{bdg}$ is the bending radius. One sample is to be plastically strained at the calculated deformation or 5%, whichever is greater and then artificially aged at 250°C for one hour then subject to Charpy V-notch testing. The average impact energy after strain ageing is to meet the impact requirements specified for the grade of steel used.

**TABLE 6.4 – Pillars, Brackets and Stiffeners**

| Detail | Standard | Limit | Remarks |
|---|---|---|---|
| Pillar (between decks)<br>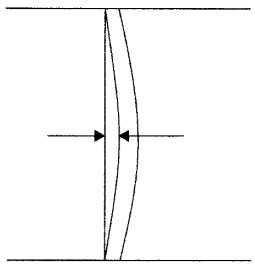 | 4 mm | 6 mm | |
| Cylindrical structure diameter (pillars, masts, posts, etc.)<br>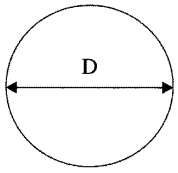 | ± D/200 mm<br>max. + 5 mm | ± D/150 mm<br>max. 7.5 mm | |
| Tripping bracket and small stiffener, distortion at the part of free edge<br>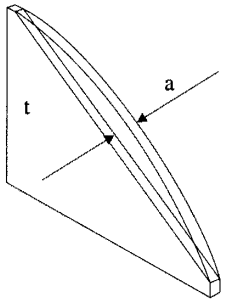 | $a \leq t/2$ mm | t | |
| Ovality of cylindrical structure<br>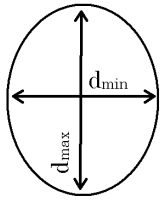 | | $d_{max} - d_{min} \leq 0.02 \times d_{max}$ | |

**TABLE 6.5 – Maximum Heating Temperature on Surface for Line Heating**

| Item | | Standard | Limit | Remarks |
|---|---|---|---|---|
| Conventional Process AH32-EH32 & AH36-EH36 | Water cooling just after heating | Under 650°C | | |
| TMCP type AH36-EH36 (Ceq.>0.38%) | Air cooling after heating | Under 900°C | | |
| | Air cooling and subsequent water cooling after heating | Under 900°C (starting temperature of water cooling to be under 500°C) | | |
| TMCP type AH32-DH32 & AH36-DH36 (Ceq. ≤ 0.38%) | Water cooling just after heating or air cooling | Under 1000°C | | |
| TMCP type EH32 & EH36 (Ceq. ≤ 0.38%) | Water cooling just after heating or air cooling | Under 900°C | | |

NOTE:

$$Ceq = C + \frac{Mn}{6} + \frac{Cr + Mo + V}{5} + \frac{Ni + Cu}{15} (\%)$$

**TABLE 6.6 – Block Assembly**

| Item | Standard | Limit | Remarks |
|---|---|---|---|
| **Flat Plate Assembly** | | | |
| Length and Breadth | ± 4 mm | ± 6 mm | |
| Distortion | ± 10 mm | ±20mm | |
| Squareness | ± 5 mm | ±10mm | |
| Deviation of interior members from plate | 5 mm | 10mm | |
| **Curved plate assembly** | | | |
| Length and Breadth | ± 4 mm | ± 8 mm | measured along the girth |
| Distortion | ± 10 mm | ± 20 mm | |
| Squareness | ± 10 mm | ± 15 mm | |
| Deviation of interior members from plate | 5 mm | 10 mm | |
| **Flat cubic assembly** | | | |
| Length and Breadth | ± 4 mm | ± 6 mm | |
| Distortion | ± 10 mm | ± 20 mm | |
| Squareness | ± 5 mm | ± 10 mm | |
| Deviation of interior members from plate | 5 mm | 10 mm | |
| Twist | ± 10 mm | ± 20 mm | |
| Deviation between upper and lower plate | ± 5 mm | ± 10 mm | |
| **Curved cubic assembly** | | | |
| Length and Breadth | ± 4 mm | ± 8 mm | measured along with girth |
| Distortion | ± 10 mm | ± 20 mm | |
| Squareness | ± 10 mm | ± 15 mm | |
| Deviation of interior members from plate | ± 5 mm | ± 10 mm | |
| Twist | ± 15 mm | ± 25 mm | |
| Deviation between upper and lower plate | ± 7 mm | ± 15 mm | |

**TABLE 6.7 – Special Sub-Assembly**

| Item | Standard | Limit | Remarks |
|---|---|---|---|
| Distance between upper/lower gudgeon | ± 5 mm | ± 10 mm | |
| Distance between aft edge of boss and aft peak bulkhead | ± 5 mm | ± 10 mm | |
| Twist of sub-assembly of stern frame | 5 mm | 10 mm | |
| Deviation of rudder from shaft center line | 4 mm | 8 mm | |
| Twist of rudder plate | 6 mm | 10 mm | |
| Flatness of top plate of main engine bed | 5 mm | 10 mm | |
| Breadth and length of top plate of main engine bed | ± 4 mm | ± 6 mm | |

NOTE:

Dimensions and tolerances have to fulfill engine and equipment manufacturers' requirements, if any.

**TABLE 6.8 – Shape**

| Detail | Standard | Limit | Remarks |
|---|---|---|---|
| Deformation for the whole length 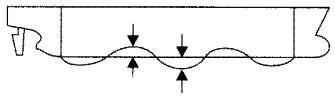 | ± 50 mm | | per 100 m against the line of keel sighting |
| Deformation for the distance between two adjacent bulkheads 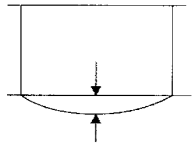 | ± 15 mm | | |
| Cocking-up of fore body 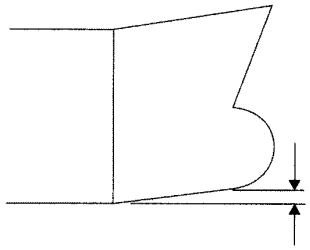 | ± 30 mm | | The deviation is to be measured from the design line. |
| Cocking-up of aft-body 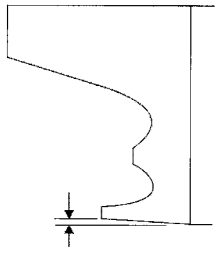 | ± 20 mm | | |
| Rise of floor amidships 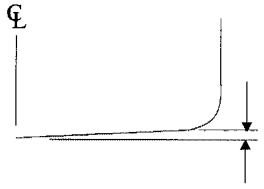  | ± 15 mm | | The deviation is to be measured from the design line. |

**TABLE 6.9 – Shape**

| Item | Standard | Limit | Remarks |
|---|---|---|---|
| Length between perpendiculars | ±L/1000 mm where L is in mm | | Applied to ships of 100 metre length and above. For the convenience of the measurement the point where the keel is connected to the curve of the stem may be substituted for the fore perpendicular in the measurement of the length. |
| Moulded breadth at midship | ±B/1000 mm where B is in mm | | Applied to ships of 15 metre breadth and above, measured on the upper deck. |
| Moulded depth at midship | ±D/1000 mm where D is in mm | | Applied to ships of 10 metre depth and above, measured up to the upper deck. |
| | | | |

**TABLE 6.10 – Fairness of Plating Between Frames**

| Item | | Standard | Limit | Remarks |
|---|---|---|---|---|
| Shell plate | Parallel part (side & bottom shell) | 4 mm | 8 mm | 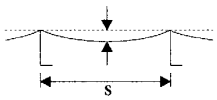 |
| | Fore and aft part | 5 mm | | |
| Tank top plate | | 4 mm | | |
| Bulkhead | Longl. Bulkhead<br>Trans. Bulkhead<br>Swash Bulkhead | 6 mm | | |
| Strength deck | Parallel part | 4 mm | 8 mm | |
| | Fore and aft part | 6 mm | 9 mm | |
| | Covered part | 7 mm | 9 mm | |
| Second deck | Bare part | 6 mm | 8 mm | |
| | Covered part | 7 mm | 9 mm | |
| Forecastle deck<br>poop deck | Bare part | 4 mm | 8 mm | |
| | Covered part | 6 mm | 9 mm | |
| Super structure deck | Bare part | 4 mm | 6 mm | |
| | Covered part | 7 mm | 9 mm | |
| House wall | Outside wall | 4 mm | 6 mm | |
| | Inside wall | 6 mm | 8 mm | |
| | Covered part | 7 mm | 9 mm | |
| Interior member (web of girder, etc) | | 5 mm | 7 mm | |
| Floor and girder in double bottom | | 5 mm | 8 mm | |

**TABLE 6.11 – Fairness of Plating with Frames**

| Item | | Standard | Limit | Remarks |
|---|---|---|---|---|
| Shell plate | Parallel part | ±2 *l* /1000 mm | ±3 *l* /1000 mm | *l* = span of frame (mm)<br><br>To be measured between on trans. space (min. *l* = 3000 mm) |
| | Fore and aft part | ±3 *l* /1000 mm | ±4 *l* /1000 mm | |
| Strength deck (excluding cross deck) and top plate of double bottom | - | ±3 *l* /1000 mm | ±4 *l* /1000 mm | |
| Bulkhead | - | | ±5 *l* /1000 mm | |
| Accommodation above the strength deck and others | - | ±5 *l* /1000 mm | ±6 *l* /1000 mm | |
| 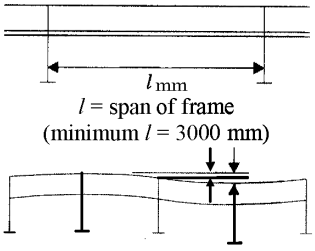<br>*l* = span of frame<br>(minimum *l* = 3000 mm)<br><br>To be measured between one trans. space. | | | | |

**TABLE 6.12 – Preheating for welding hull steels at low temperature**

| Item | | Standard | | Limit | Remarks |
|---|---|---|---|---|---|
| | | Base metal temperature needed preheating | Minimum preheating temperature | | |
| Normal strength steels | A, B, D, E | Below -5 °C | 20 °C [1)] | | |
| Higher strength steels (TMCP type) | AH32 – EH32<br>AH36 – EH36 | Below 0 °C | | | |
| Higher strength steels (Conventional type) | | Below 0 °C | | | |

(Note)
1) This level of preheat is to be applied unless the approved welding procedure specifies a higher level.

**TABLE 7.1 – Alignment**

| Detail | Standard | Limit | Remarks |
|---|---|---|---|
| Alignment of butt welds<br>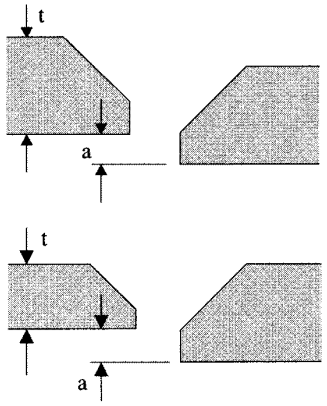 | | a ≤ 0.15t strength member<br>a ≤ 0.2t other<br>but maximum 4.0 mm | t is the lesser plate thickness |
| Alignment of fillet welds<br>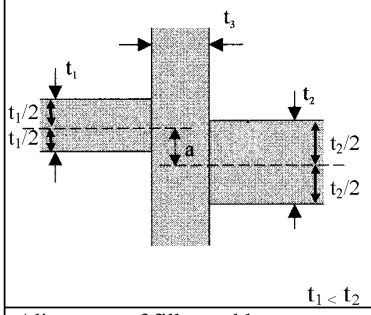 | | Strength member and higher stress member:<br>a ≤ $t_1/3$<br><br>Other:<br>a ≤ $t_1/2$ | Alternatively, heel line can be used to check the alignment.<br><br>Where $t_3$ is less than $t_1$, then $t_3$ should be substituted for $t_1$ in the standard. |
| Alignment of fillet welds<br>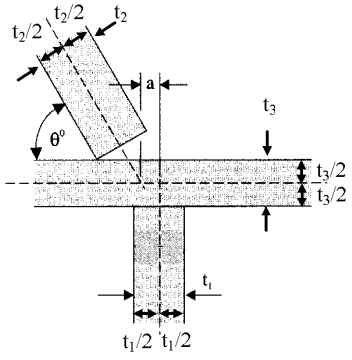 | | Strength member and higher stress member:<br>a ≤ $t_1/3$<br><br>Other:<br>a ≤ $t_1/2$ | Alternatively, heel line can be used to check the alignment.<br><br>Where $t_3$ is less than $t_1$, then $t_3$ should be substitute for $t_1$ in the standard. |

**TABLE 7.2 – Alignment**

| Detail | Standard | Limit | Remarks |
|---|---|---|---|
| Alignment of flange of T-longitudinal<br>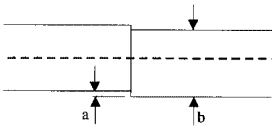<br><br>b (mm) | Strength member<br>a ≤ 0.04b (mm) | a = 8.0 mm | |
| Alignment of height of T-bar, L-angle bar or bulb<br>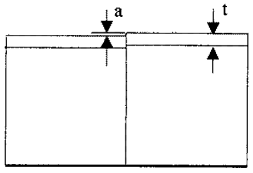<br> | Strength member<br>a ≤ 0.15t<br><br>Other<br>a ≤ 0.20t | a = 3.0 mm | |
| Alignment of panel stiffener<br>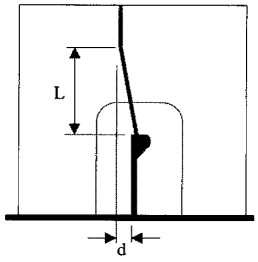<br> | d ≤ L/50 | | |
| Gap between bracket/intercostal and stiffener<br>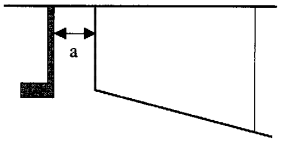<br> | a ≤ 2.0 mm | a = 3.0 mm | |
| Alignment of lap welds<br>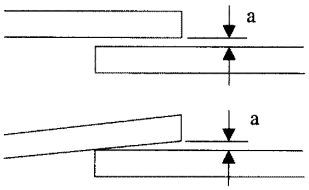<br> | a ≤ 2.0 mm | a = 3.0 mm | |

**TABLE 7.3 – Alignment**

| Detail | Standard | Limit | Remarks |
|---|---|---|---|
| Gap between beam and frame 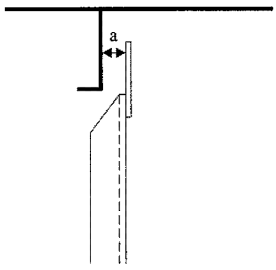  | a ≤ 2.0 mm | a = 5.0 mm | |
| Gap around stiffener cut-out 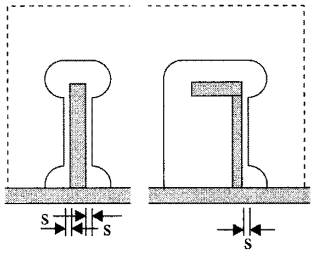  | s ≤ 2.0 mm | s = 3.0 mm | |
| | | | |

**TABLE 8.1 – Typical Butt Weld Plate Edge Preparation (Manual Welding and Semi-Automatic Welding) for Reference**

| Detail | Standard | Limit | Remarks |
|---|---|---|---|
| Square butt $t \leq 5$ mm 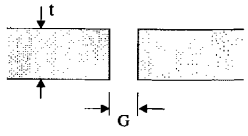  | G ≤ 3 mm | G = 5 mm | see Note 1 |
| Single bevel butt $t > 5$ mm 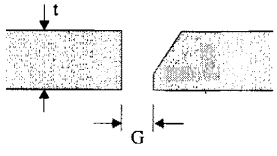  | G ≤ 3 mm | G = 5 mm | see Note 1 |
| Double bevel butt $t > 19$ mm 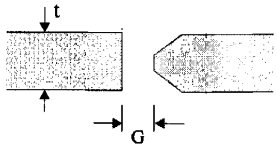  | G ≤ 3 mm | G = 5 mm | see Note 1 |
| Double vee butt, uniform bevels 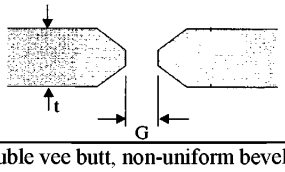  | G ≤ 3 mm | G = 5 mm | see Note 1 |
| Double vee butt, non-uniform bevel 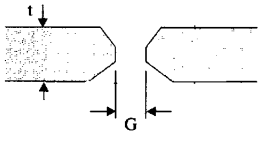  | G ≤ 3 mm | G = 5 mm | see Note 1 |

**NOTE 1**

Different plate edge preparation may be accepted or approved by the Classification Society in accordance with URW28 or other recognized standard accepted by the Classification Society.
For welding procedures other than manual welding, see paragraph 3.2 Qualification of weld procedures.

**TABLE 8.2 – Typical Butt Weld Plate Edge Preparation (Manual Welding and Semi-Automatic Welding) for Reference**

| Detail | Standard | Limit | Remarks |
|---|---|---|---|
| Single Vee butt, one side welding with backing strip (temporary or permanent)<br>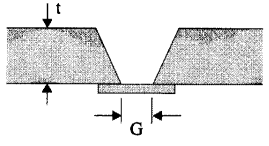 | G = 3 to 9 mm | G = 16 mm | see Note 1 |
| Single vee butt<br>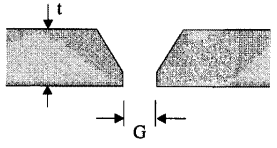 | G ≤ 3 mm | G = 5 mm | see Note 1 |
| | | | |

**NOTE 1**

Different plate edge preparation may be accepted or approved by the Classification Society in accordance with URW28 or other recognized standard accepted by the Classification Society.
For welding procedures other than manual welding, see paragraph 3.2 Qualification of welding procedures.

**Table 8.3 – Typical Fillet Weld Plate Edge Preparation (Manual Welding and Semi-Automatic Welding) for Reference**

| Detail | Standard | Limit | Remarks |
|---|---|---|---|
| Tee Fillet 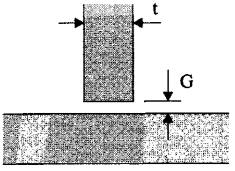  | G ≤ 2 mm | G = 3 mm | see Note 1 |
| Inclined fillet 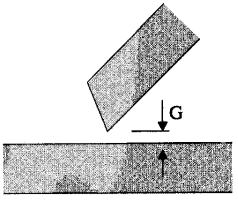  | G ≤ 2 mm | G = 3 mm | see Note 1 |
| Single bevel tee with permanent backing 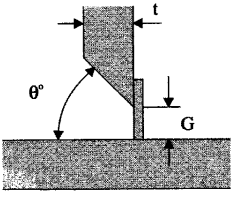  | G ≤ 4 to 6 mm<br>θ° = 30° to 45° | G = 16 mm | Not normally for strength member<br>also see Note 1 |
| Single bevel tee 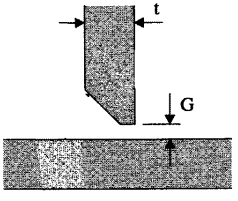  | G ≤ 3 mm | | see Note 1 |

**NOTE 1**

Different plate edge preparation may be accepted or approved by the Classification Society in accordance with URW28 or other recognized standard accepted by the Classification Society.
For welding procedures other than manual welding, see paragraph 3.2 Qualification of welding procedures.

**Table 8.4 – Typical Fillet Weld Plate Edge Preparation (Manual Welding and Semi-Automatic Welding) for Reference**

| Detail | Standard | Limit | Remarks |
|---|---|---|---|
| Single 'J' bevel tee 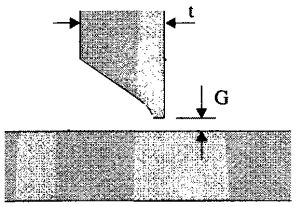  | G = 2.5 to 4 mm | | see Note 1 |
| Double bevel tee symmetrical t > 19 mm 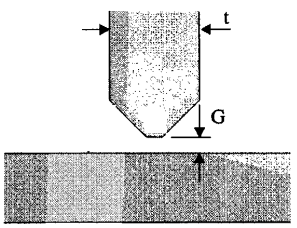  | G ≤ 3 mm | | see Note 1 |
| Double bevel tee asymmetrical t > 19 mm 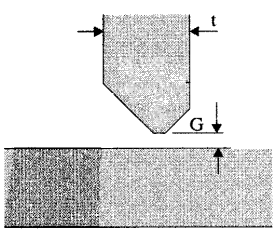  | G ≤ 3 mm | | see Note 1 |
| Double 'J' bevel tee symmetrical 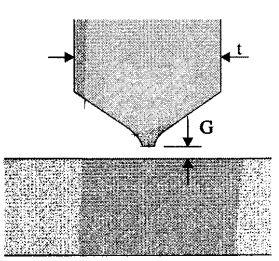  | G = 2.5 to 4 mm | | see Note 1 |

**NOTE 1**
Different plate edge preparation may be accepted or approved by the Classification Society in accordance with URW28 or other recognized standard accepted by the Classification Society.
For welding procedures other than manual welding, see paragraph 3.2 Qualification of welding procedures.

**Table 8.5 – Butt And Fillet Weld Profile (Manual Welding and Semi-Automatic Welding)**

| Detail | Standard | Limit | Remarks |
|---|---|---|---|
| Butt weld toe angle<br>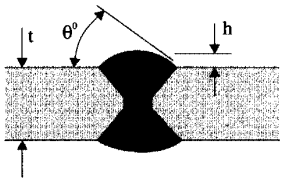 | $\theta \leq 60°$<br>$h \leq 6$ mm | $\theta \leq 90°$ | |
| Butt weld undercut<br>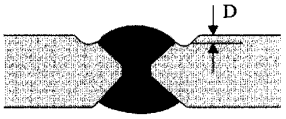 | | $D \leq 0.5$ mm<br>for strength member<br><br>$D \leq 0.8$ mm<br>for other | |
| Fillet weld leg length<br>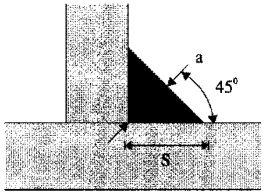<br>s = leg length; a = throat thickness | | $s \geq 0.9s_d$<br>$a \geq 0.9a_d$<br><br>over short weld lengths | $s_d$ = design s<br>$a_d$ = design a |
| Fillet weld toe angle<br>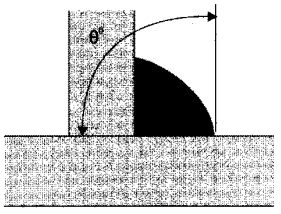 | | $\theta \leq 90°$ | In areas of stress concentration and fatigue, the Classification Society may require a lesser angle. |
| Fillet weld undercut<br>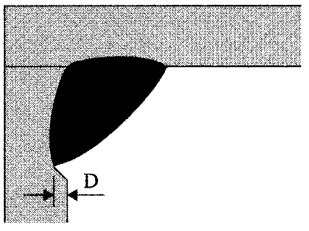 | | $D \leq 0.8$ mm | |

**Table 8.6 – Typical Butt Weld Plate Edge Preparation (Automatic welding) for Reference**

| Detail | Standard | Limit | Remarks |
|---|---|---|---|
| Submerged Arc Welding (SAW)<br>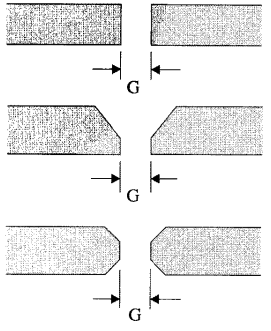<br> | $0 \leq G \leq 0.8$ mm | G = 2 mm | See Note 1. |
| | | | |

**NOTE 1**

Different plate edge preparation may be accepted or approved by the Classification Society in accordance with URW28 or other recognized standard accepted by the Classification Society.
For welding procedures other than manual welding, see paragraph 3.2 Qualification of welding procedures.

**Table 8.7 – Distance Between Welds**

| Detail | Standard | Limit | Remarks |
|---|---|---|---|
| Scallops over weld seams<br>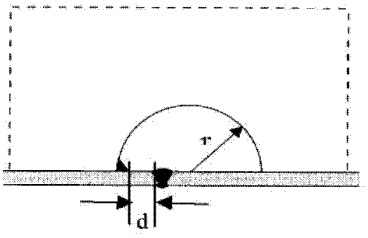 | | for strength member<br>d ≥ 5mm<br><br>for other<br>d ≥ 0mm | The "d" is to be measured from the toe of the fillet weld to the toe of the butt weld. |
| Distance between two butt welds<br>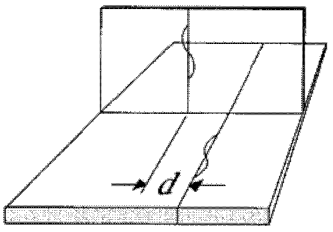 | | d ≥ 0 mm | |
| Distance between butt weld and fillet weld<br>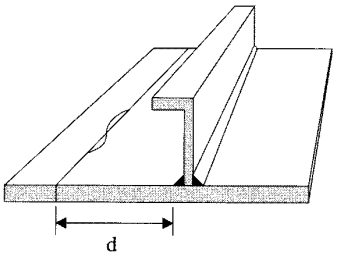 | | for strength member<br>d ≥ 10 mm<br><br>for other<br>d ≥ 0 mm | The "d" is to be measured from the toe of the fillet weld to the toe of the butt weld. |
| Distance between butt welds<br>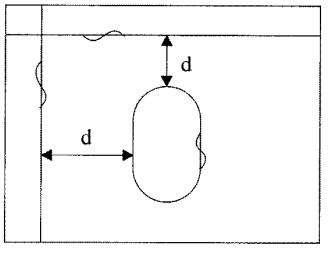 | for cut-outs<br>d ≥ 30 mm | | |
| | for margin plates<br>d ≥ 300 mm | 150 mm | |

**Table 9.1 – Typical Misalignment Remedial**

| Detail | Remedial Standard | Remarks |
|---|---|---|
| Alignment of butt joints<br>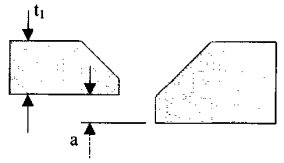 | Strength member<br>$a > 0.15t_1$ or $a > 4$ mm<br>release and adjust<br><br>Other<br>$a > 0.2t_1$ or $a > 4$ mm<br>release and adjust | $t_1$ is lesser plate thickness |
| Alignment of fillet welds<br>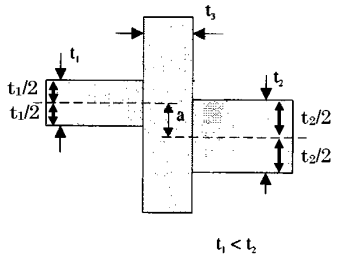 | Strength member and higher stress member<br>$t_1/3 < a \leq t_1/2$ - generally increase weld throat by 10%<br><br>$a > t_1/2$ - release and adjust over a minimum of 50a<br><br>Other<br>$a > t_1/2$ - release and adjust over a minimum of 30a | Alternatively, heel line can be used to check the alignment.<br><br>Where $t_3$ is less than $t_1$ then $t_3$ should be substituted for $t_1$ in standard |
| Alignment of flange of T-longitudinal<br>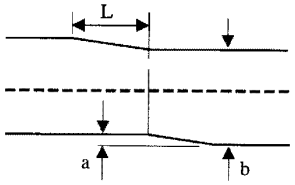 | When $0.04b < a \leq 0.08b$, max 8 mm:<br>grind corners to smooth taper over a minimum distance L = 3a<br><br>When $a > 0.08b$ or 8 mm:<br>release and adjust over a minimum distance L = 50a | |
| Alignment of height of T-bar, L-angle bar or bulb<br>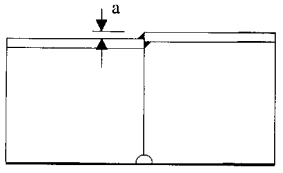 | When 3 mm < a ≤ 6 mm:<br>build up by welding<br><br>When a > 6 mm:<br>release and adjust over minimum L = 50a for strength member and L = 30a for other<br>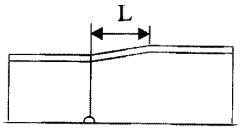 | |
| Alignment of lap welds<br>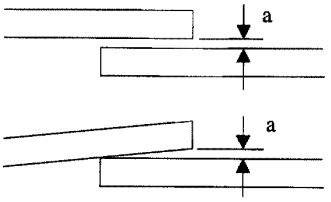 | 3 mm < a ≤ 5 mm:<br>weld leg length to be increased by the same amount as increase in gap in excess of 3 mm<br><br>a > 5 mm:<br>members to be re-aligned | |

**Table 9.2 – Typical Misalignment Remedial**

| Detail | Remedial Standard | Remarks |
|---|---|---|
| Gap between bracket/intercostal and stiffener<br>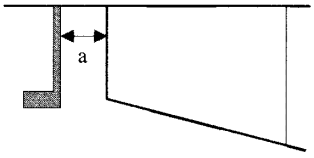<br> | When 3 mm < a ≤ 5 mm:<br>weld leg length to be increased by increase in gap in excess of 3 mm | |
| | When 5mm < a ≤ 10 mm:<br>chamfer 30° to 40° and build up by welding with backing | |
| | When a > 10 mm:<br>increase gap to about 50 mm and fit collar plate<br>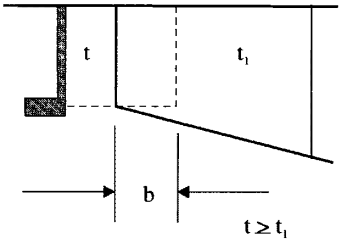<br><br>b = (2t + 25) mm, min. 50 mm | |
| Gap between beam and frame<br>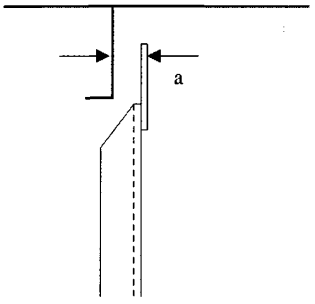<br> | 3 mm < a ≤ 5 mm:<br>weld leg length to be increased by the same amount as increase in gap in excess of 3 mm<br><br>a > 5 mm release and adjust | |

**TABLE 9.3 – Misalignment Remedial**

| Detail | Remedial standard | Remarks |
|---|---|---|
| Position of scallop<br>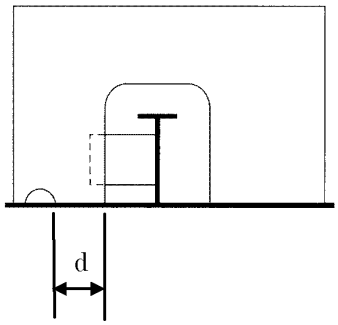 | When d < 75 mm<br>web plate to be cut between scallop and slot, and collar plate to be fitted<br>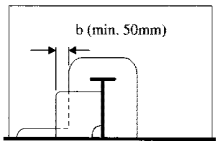<br>Or fit small collar over scallop<br>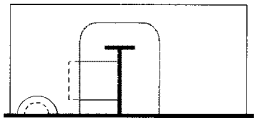<br>Or fit collar plate over scallop<br>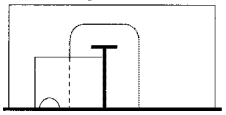 | |
| Gap around stiffener cut-out<br>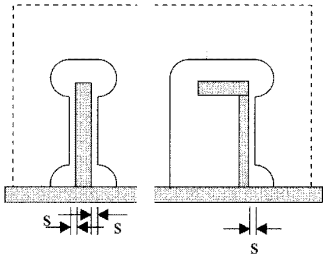 | When 3 mm < s ≤ 5 mm<br>weld leg length to be increased by the same amount as increase in gap in excess of 2 mm<br><br>When 5 mm < s ≤ 10 mm<br>nib to be chamfered and built up by welding<br><br>When s > 10 mm<br>cut off nib and fit collar plate of same height as nib<br>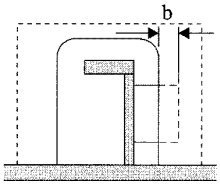<br>20 mm ≤ b ≤ 50 mm | |

**TABLE 9.4 – Typical Butt Weld Plate Edge Preparation Remedial (Manual Welding and Semi-Automatic Welding)**

| Detail | Remedial standard | Remarks |
|---|---|---|
| Square butt<br>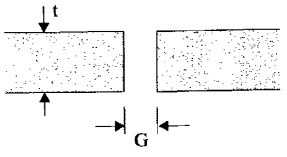 | When G ≤ 10 mm<br>chamfer to 45° and build up by welding<br><br>When G > 10mm<br>build up with backing strip; remove,<br>back gouge and seal weld;<br>or, insert plate, min. width 300 mm | |
| Single bevel butt<br>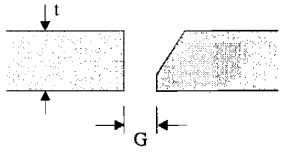 | When 5 mm < G ≤ 1.5t (maximum 25 mm)<br>build up gap with welding on one or both edges to maximum of 0.5t, using backing strip, if necessary.<br><br>Where a backing strip is used, the backing strip is to be removed, the weld back gouged, and a sealing weld made.<br>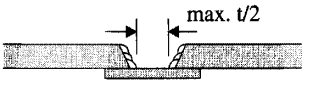 | |
| Double bevel butt<br>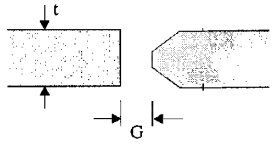 | Different welding arrangement by using backing material approved by the Classification Society may be accepted on the basis of an appropriate welding procedure specification.<br><br>When G > 25 mm or 1.5t, whichever is smaller, use insert plate, of minimum width 300 mm<br>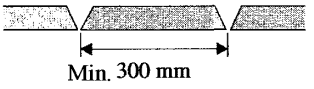 | |
| Double vee butt, uniform bevels<br>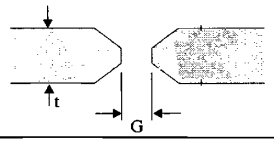 | | |
| Double vee butt, non-uniform bevel<br>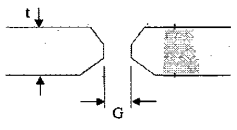 | | |

**TABLE 9.5 – Typical Butt Weld Plate Edge Preparation Remedial (Manual Welding and Semi-Automatic Welding)**

<table>
<tr><th>Detail</th><th>Remedial Standard</th><th>Remarks</th></tr>
<tr><td>Single vee butt, one side welding<br>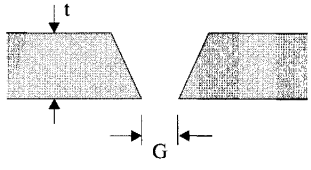<br></td><td rowspan="2">When 5 mm < G ≤ 1.5t mm (maximum 25 mm), build up gap with welding on one or both edges, to "Limit" gap size preferably to "Standard" gap size as described in Table 8.2.<br><br>Where a backing strip is used, the backing strip is to be removed, the weld back gouged, and a sealing weld made.<br><br>Different welding arrangement by using backing material approved by the Classification Society may be accepted on the basis of an appropriate welding procedure specification.<br><br>Limits see Table 8.2<br>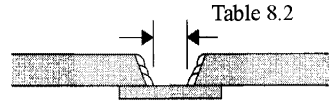<br><br>When G > 25 mm or 1.5t, whichever is smaller, use insert plate of minimum width 300 mm.<br><br>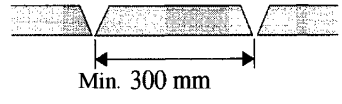<br></td><td rowspan="2"></td></tr>
<tr><td>Single vee butt<br>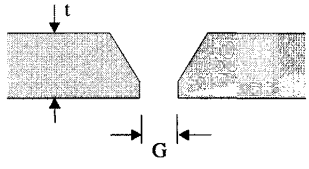<br></td></tr>
<tr><td></td><td></td><td></td></tr>
</table>

**TABLE 9.6 – Typical Fillet Weld Plate Edge Preparation Remedial (Manual Welding and Semi-Automatic Welding)**

<table>
<tr><th>Detail</th><th>Remedial standard</th><th>Remarks</th></tr>
<tr><td rowspan="3">Tee Fillet<br>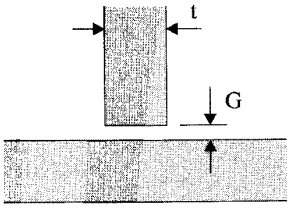
</td><td>3 mm < G ≤ 5 mm – leg length increased to Rule leg + (G-2)</td><td rowspan="3"></td></tr>
<tr><td>5 mm < G ≤ 16 mm or G ≤ 1.5t - chamfer by 30° to 45°,<br>build up with welding, on one side, with backing strip if necessary, grind and weld.<br>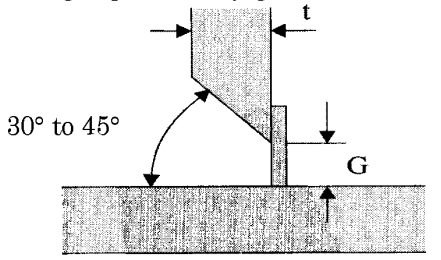
</td></tr>
<tr><td>G > 16 mm or G > 1.5t use insert plate of minimum width 300 mm<br>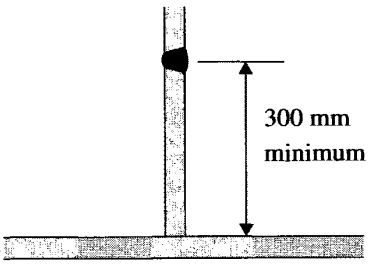
</td></tr>
<tr><td>Liner treatment<br>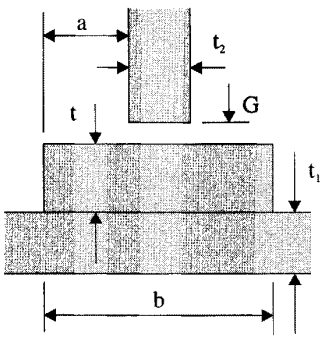
</td><td>$t_2 \le t \le t_1$<br>G ≤ 2 mm<br>a = 5 mm + fillet leg length</td><td>Not to be used in cargo area or areas of tensile stress through the thickness of the liner</td></tr>
</table>

**TABLE 9.7 – Typical Fillet Weld Plate Edge Preparation Remedial (Manual Welding and Semi-Automatic Welding)**

<table>
<tr><th>Detail</th><th>Remedial standard</th><th>Remarks</th></tr>
<tr><td rowspan="3">Single bevel tee<br>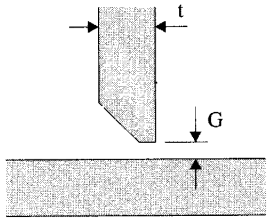
</td><td>3 mm < G ≤ 5 mm<br>build up weld</td><td rowspan="3"></td></tr>
<tr><td>5 mm < G ≤ 16 mm - build up with welding, with backing strip if necessary, remove backing strip if used, back gouge and back weld.<br>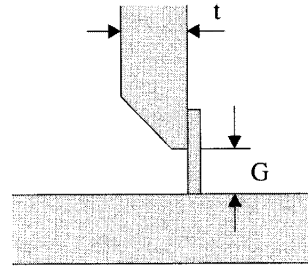
</td></tr>
<tr><td>G > 16 mm new plate to be inserted of minimum width 300 mm<br>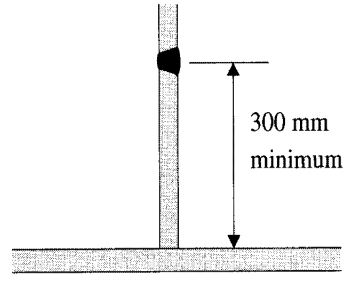
</td></tr>
<tr><td></td><td></td><td></td></tr>
</table>

**TABLE 9.8 – Typical Fillet Weld Plate Edge Preparation Remedial (Manual Welding and Semi-Automatic Welding)**

| Detail | Remedial standard | Remarks |
|---|---|---|
| Single 'J' bevel tee<br>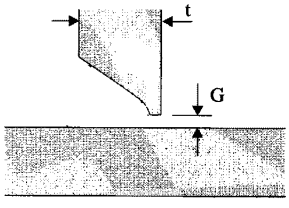 | as single bevel tee | |
| Double bevel tee symmetrical<br>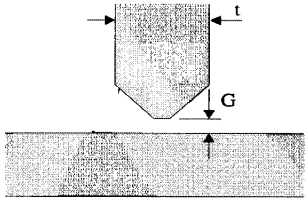 | When 5 mm < G ≤ 16 mm build up with welding using ceramic or other approved backing bar, remove, back gouge and back weld.<br>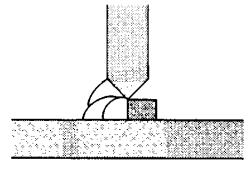 | |
| Double bevel tee asymmetrical<br>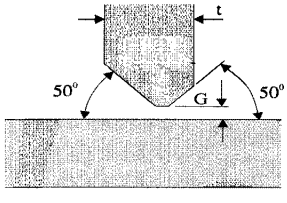 | When G > 16 mm-insert plate of minimum height 300 mm to be fitted.<br>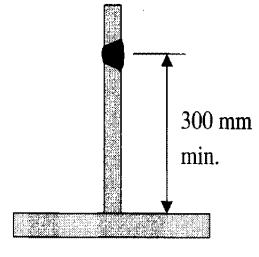 | |
| Double 'J' bevel symmetrical<br>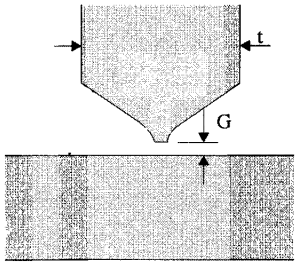 | | |

**TABLE 9.9 – Typical Fillet and Butt Weld Profile Remedial (Manual Welding and Semi-Automatic Welding)**

| Detail | Remedial standard | Remarks |
|---|---|---|
| Fillet weld leg length 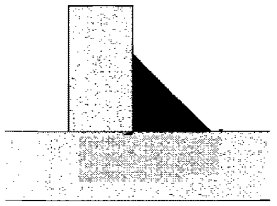 | Increase leg or throat by welding over | Minimum short bead to be referred Table 9.14 |
| Fillet weld toe angle 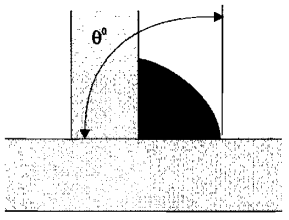  | θ > 90° grinding, and welding, where necessary, to make θ ≤ 90° | |
| Butt weld toe angle 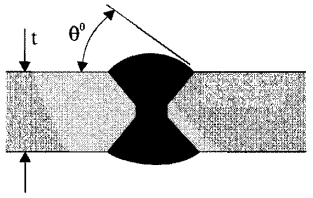  | θ > 90° grinding, and welding, where necessary, to make θ ≤ 90° | |
| Butt weld undercut 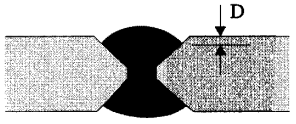  | For strength member, where 0.5 < D ≤ 1 mm, and for other, where 0.8 < D ≤ 1 mm, undercut to be ground smooth (localized only) or to be filled by welding<br><br>Where D > 1 mm<br>undercut to be filled by welding | |
| Fillet weld undercut 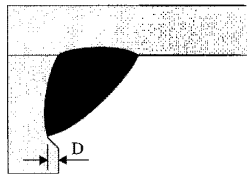  | Where 0.8 < D ≤ 1 mm<br>undercut to be ground smooth (localized only) or to be filled by welding<br><br>Where D > 1 mm<br>undercut to be filled by welding | |

**TABLE 9.10 – Distance Between Welds Remedial**

| Detail | Remedial standard | Remarks |
|---|---|---|
| Scallops over weld seams 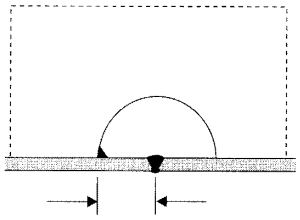 | Hole to be cut and ground smooth to obtain distance | |
| | | |

**TABLE 9.11 – Erroneous Hole Remedial**

<table>
<tr><th>Detail</th><th>Remedial standard</th><th>Remarks</th></tr>
<tr><td rowspan="2">Holes made erroneously D < 200 mm<br>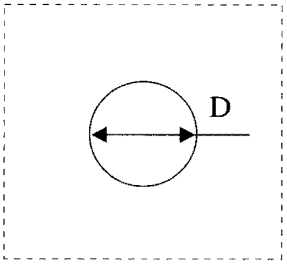<br></td><td>Strength member<br>open hole to minimum 75 mm dia.,<br>fit and weld spigot piece<br>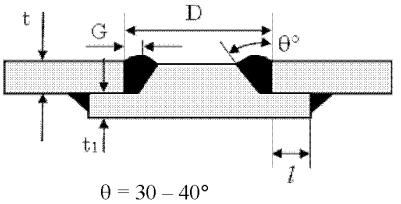<br><br>θ = 30 – 40°<br>G = 4 – 6 mm<br>1/2t ≤ t1 ≤ t<br>l = 50 mm<br>Or<br>open hole to over 300 mm and fit insert plate</td><td rowspan="2">Fillet weld to be made after butt weld<br><br>The fitting of spigot pieces in areas of high stress concentration or fatigue is to be approved by the Classification Society.</td></tr>
<tr><td>Other<br>open hole to over 300 mm and fit insert plate<br><br>Or fit lap plate<br>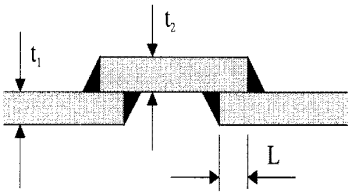<br><br>t1 = t2 L = 50 mm, min</td></tr>
<tr><td rowspan="2">Holes made erroneously D ≥ 200 mm<br>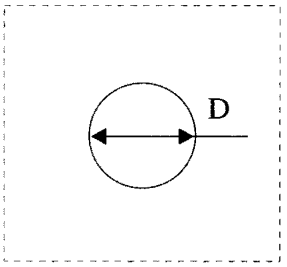<br></td><td>Strength member<br>open hole and fit insert plate</td><td rowspan="2"></td></tr>
<tr><td>Other<br>open hole to over 300 mm and fit insert plate<br>Or fit lap plate<br>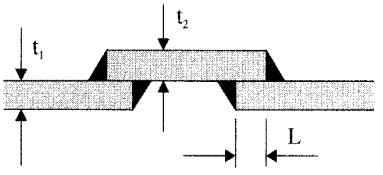<br><br>t1 = t2 L = 50 mm, min</td></tr>
</table>

**TABLE 9.12 – Remedial by Insert Plate**

| Detail | Remedial standard | Remarks |
|---|---|---|
| Remedial by insert plate<br>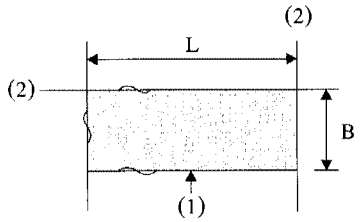<br><br>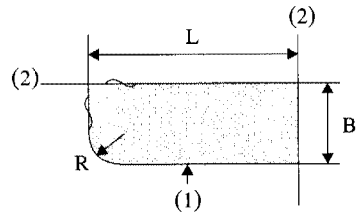<br> | L = 300 mm minimum<br><br>B = 300 mm minimum<br><br>R = 5t mm<br>100mm minimum<br><br>(1) seam with insert piece is to be welded first<br><br>(2) original seam is to be released and welded over for a minimum of 100 mm. | |
| Remedial of built section by insert plate<br>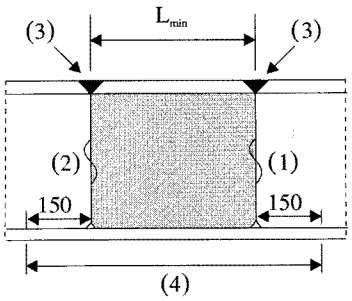<br><br>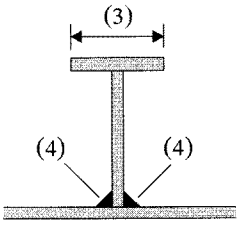<br> | $L_{min} \geq 300$ mm<br><br>Welding sequence<br>(1) →(2) →(3) →(4)<br><br>Web butt weld scallop to be filled during final pass (4) | |

**TABLE 9.13 – Weld Surface Remedial**

| Detail | Remedial standard | Remarks |
|---|---|---|
| Weld spatter 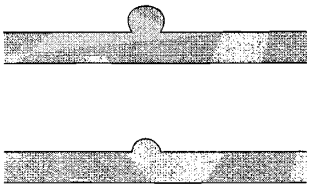 | 1. Remove spatter observed before blasting with scraper or chipping hammer, etc.<br>2. For spatter observed after blasting:<br>a) Remove with a chipping hammer, scraper, etc.<br>b) For spatter not easily removed with a chipping hammer, scraper, etc., grind the sharp angle of spatter to make it obtuse. | In principle, no grinding is applied to weld surface. |
| Arc strike<br>(HT steel, Cast steel, Grade E of mild steel, TMCP type HT steel, Low temp steel) | Remove the hardened zone by grinding or other measures such as overlapped weld bead etc. | Minimum short bead to be referred Table 9.14 |
| | | |

**TABLE 9.14 – Welding Remedial by Short Bead**

| Detail | Remedial standard | Remarks |
|---|---|---|
| Short bead for remedying scar (scratch) | a) HT steel, Cast steel, TMCP type HT steel (Ceq > 0.36%) and Low temp steel (Ceq > 0.36%)<br>Length of short bead ≥ 50 mm<br>b) Grade E of mild steel<br>Length of short bead ≥ 30 mm<br>c) TMCP type HT steel (Ceq ≤ 0.36%) and Low temp steel (Ceq ≤ 0.36%)<br>Length of short bead ≥ 10 mm | Preheating is necessary at 100 ± 25°C |
| Remedying weld bead | a) HT steel, Cast steel, TMCP type HT steel (Ceq > 0.36%) and Low temp steel (Ceq > 0.36%)<br>Length of short bead ≥ 50 mm<br>b) Grade E of mild steel<br>Length of short bead ≥ 30 mm<br>c) TMCP type HT steel (Ceq ≤ 0.36%) and Low temp steel (Ceq ≤ 0.36%)<br>Length of short bead ≥ 30 mm | |

NOTE:

1. When short bead is made erroneously, remove the bead by grinding.
2. $Ceq = C + \frac{Mn}{6} + \frac{Cr + Mo + V}{5} + \frac{Ni + Cu}{15} (\%)$

# No. 47 Part B

# Repair Quality Standard for Existing Ships

**No. 47** (cont)

**Part B - Shipbuilding and Repair Quality Standard for Existing Ships**

CONTENTS:


**1. Scope**

**2. General requirements to repairs and repairers**

**3. Qualification of personnel**

3.1 Qualification of welders
3.2 Qualification of welding procedures
3.3 Qualification of NDE operators

**4. Materials**

4.1 General requirements to materials
4.2 Equivalency of material grades

**5. General requirements to welding**

5.1 Correlation of welding consumables to hull structural steels
5.2 General requirements to preheating and drying out
5.3 Dry welding on hull plating below the waterline of vessels afloat

**6. Repair quality standard**

6.1 Welding, general
6.2 Renewal of plates
6.3 Doubler on plates
6.4 Renewal of internals/stiffeners
6.5 Renewal of internals/stiffeners - transitions inverted angles/bulb profiles
6.6 Application of Doubling Straps
6.7 Welding of pitting corrosion
6.8 Welding repairs of cracks


REFERENCES


1. IACS "Bulk Carriers - Guidelines for Surveys, Assessment and Repair of Hull Structure"
2. TSCF "Guidelines for the inspection and maintenance of double hull tanker structures"
3. TSCF "Guidance manual for the inspection and condition assessment of tanker structures"
4. IACS UR W 11 "Normal and higher strength hull structural steels"
5. IACS UR W 13 "Thickness tolerances of steel plates and wide flats"
6. IACS UR W 17 "Approval of consumables for welding normal and higher strength hull structural steels"
7. IACS Z 10.1 "Hull surveys of oil tankers" and Z 10.2 "Hull surveys of bulk carriers" Table IV
8. IACS UR Z 13 "Voyage repairs and maintenance"
9. IACS Recommendation 12 "Guidelines for surface finish of hot rolled steel plates and wide flats"
10. IACS Recommendation 20 "Non-destructive testing of ship hull steel welds"

**No. 47** (cont)

## 1. Scope

1.1 This standard provides guidance on quality of repair of hull structures. The standard covers permanent repairs of existing ships.

Whereas the standard generally applies to

- conventional ship types,
- parts of hull covered by the rules of the Classification Society,
- hull structures constructed from normal and higher strength hull structural steel, the applicability of the standard is in each case to be agreed upon by the Classification Society.

The standard does generally not apply to repair of

- special types of ships as e.g. gas tankers
- structures fabricated from stainless steel or other, special types or grades of steel

1.2 The standard covers typical repair methods and gives guidance on quality standard on the most important aspects of such repairs. Unless explicitly stated elsewhere in the standard, the level of workmanship reflected herein will in principle be acceptable for primary and secondary structure of conventional design. A more stringent standard may however be required for critical and highly stressed areas of the hull, and is to be agreed with the Classification Society in each case. In assessing the criticality of hull structure and structural components, reference is made to ref. 1, 2 and 3.

1.3 Restoration of structure to the original standard may not constitute durable repairs of damages originating from insufficient strength or inadequate detail design. In such cases strengthening or improvements beyond the original design may be required. Such improvements are not covered by this standard, however it is referred to ref. 1, 2 and 3.

**No. 47** (cont)

## 2. General requirements for repairs and repairers

2.1 In general, when hull structure covered by classification is to be subjected to repairs, the work is to be carried out under the supervision of the Surveyor to the Classification Society. Such repairs are to be agreed prior to commencement of the work.

2.2 Repairs are to be carried out by workshops, repair yards or personnel who have demonstrated their capability to carry out hull repairs of adequate quality in accordance with the Classification Society's requirements and this standard.

2.3 Repairs are to be carried out under working conditions that facilitate sound repairs. Provisions are to be made for proper accessibility, staging, lighting and ventilation. Welding operations are to be carried out under shelter from rain, snow and wind.

2.4 Welding of hull structures is to be carried out by qualified welders, according to approved and qualified welding procedures and with welding consumables approved by the Classification Society, see Section 3. Welding operations are to be carried out under proper supervision of the repair yard.

2.5 Where repairs to hull which affect or may affect classification are intended to be carried out during a voyage, complete repair procedure including the extent and sequence of repair is to be submitted to and agreed upon by the Surveyor to the Classification Society reasonably in advance of the repairs. See Ref. 8.

**No. 47** (cont)

## 3. Qualification of personnel

### 3.1 Qualification of welders

3.1.1 Welders are to be qualified in accordance with the procedures of the Classification Society or to a recognised national or international standard, e.g. EN 287, ISO 9606, ASME Section IX, ANSI/AWS D1.1. Recognition of other standards is subject to submission to the Classification Society for evaluation. Repair yards and workshops are to keep records of welders qualification and, when required, furnish valid approval test certificates.

3.1.2 Welding operators using fully mechanised of fully automatic processes need generally not pass approval testing, provided that production welds made by the operators are of the required quality. However, operators are to receive adequate training in setting or programming and operating the equipment. Records of training and production test results shall be maintained on individual operator's files and records, and be made available to the Classification Society for inspection when requested.

### 3.2 Qualification of welding procedures

Welding procedures are to be qualified in accordance with the procedures of the Classification Society or a recognised national or international standard, e.g. EN288, ISO 9956, ASME Section IX, ANSI/AWS D1.1. Recognition of other standards is subject to submission to the Classification Society for evaluation. The welding procedure should be supported by a welding procedure qualification record. The specification is to include the welding process, types of electrodes, weld shape, edge preparation, welding techniques and positions.

### 3.3 Qualification of NDE operators

3.3.1 Personnel performing non destructive examination for the purpose of assessing quality of welds in connection with repairs covered by this standard, are to be qualified in accordance with the Classification Society rules or to a recognised international or national qualification scheme. Records of operators and their current certificates are to be kept and made available to the Surveyor for inspection.

**No. 47** (cont)

## 4. Materials

### 4.1 General requirements for materials

4.1.1 The requirements for materials used in repairs are in general the same as the requirements for materials specified in the Classification Society's rules for new constructions, (ref. 5).

4.1.2 Replacement material is in general to be of the same grade as the original approved material. Alternatively, material grades complying with recognised national or international standards may be accepted by the Classification Societies provided such standards give equivalence to the requirements of the original grade or are agreed by the Classification Society. For assessment of equivalency between steel grades, the general requirements and guidelines in Section 4.2 apply.

4.1.3 Higher tensile steel is not to be replaced by steel of a lesser strength unless specially approved by the Classification Society.

4.1.4 Normal and higher strength hull structural steels are to be manufactured at works approved by the Classification Society for the type and grade being supplied.

4.1.5 Materials used in repairs are to be certified by the Classification Society applying the procedures and requirements in the rules for new constructions. In special cases, and normally limited to small quantities, materials may be accepted on the basis of alternative procedures for verification of the material's properties. Such procedures are subject to agreement by the Classification Society in each separate case.

### 4.2 Equivalency of material grades

4.2.1 Assessment of equivalency between material grades should at least include the following aspects;

- heat treatment/delivery condition
- chemical composition
- mechanical properties
- tolerances

4.2.2 When assessing the equivalence between grades of normal or higher strength hull structural steels up to and including grade E40 in thickness limited to 50 mm, the general requirements in Table 4.1 apply.

4.2.3 Guidance on selection of steel grades to certain recognised standards equivalent to hull structural steel grades specified in Classification Societies' rules is given in Table 4.2

**No. 47** (cont)

| Items to be considered | Requirements | Comments |
|---|---|---|
| Chemical composition | - C; equal or lower<br>- P and S; equal or lower<br>- Mn; approximately the same but not exceeding 1.6%<br>- Fine grain elements; in same amount<br>- Detoxidation practice | The sum of the elements, e.g. Cu, Ni, Cr and Mo should not exceed 0.8% |
| Mechanical properties | - Tensile strength; equal or higher Yield strength; equal or higher<br>- Elongation; equal or higher<br>- Impact energy; equal or higher at same or lower temperature, where applicable | Actual yield strength should not exceed Classification Society Rule minimum requirements by more than 80 $N/mm^2$ |
| Condition of supply | Same or better | Heat treatment in increasing order;<br>- as rolled (AR)<br>- controlled rolled (CR)<br>- normalised (N)<br>- thermo-mechanically rolled (TM)[1)]<br>- quenched and tempered (QT)[1)]<br>[1)] TM- and QT-steels are not suitable for hot forming |
| Tolerances | - Same or stricter | Permissable under thickness tolerances;<br>- plates: 0.3 mm<br>- sections: according to recognised standards |

**Table 4.1 Minimum extent and requirements to assessment of equivalency between normal or higher strength hull structual steel grades**

**No. 47** (cont)

| Steel grades according to Classification Societies' rules (ref. 5) | | | | | | | Comparable steel grades | | | |
|---|---|---|---|---|---|---|---|---|---|---|
| **Grade** | **Yield stress $R_{eH}$ min. N/mm²** | **Tensile strength $R_m$ N/mm²** | **Elongation $A_5$ min. %** | **Average impact energy Temp. °C** | **J, min. L** | **T** | **ISO 630-80 4950/2/3/ 1981** | **EN EN 10025-93 EN 10113-93** | **ASTM A 131** | **JIS G 3106** |
| A | 235 | 400-502 | 22 | +20 | - | - | Fe 360B | S235JRG2 | A | SM41B |
| B | | | | 0 | 27 | 20 | Fe 360C | S235J0 | B | SM41B |
| D | | | | -20 | 27 | 20 | Fe 360D | S235J2G3 | D | (SM41C) |
| E | | | | -40 | 27 | 20 | - | S275NL/ML | E | - |
| A 27 | 265 | 400-530 | 22 | 0 | | | Fe 430C | S275J0G3 | - | - |
| D 27 | | | | -20 | 27 | 20 | Fe 430D | S275N/M | - | - |
| E 27 | | | | -40 | | | - | S275NL/ML | - | - |
| A 32 | 315 | 440-590 | 22 | 0 | | | - | - | AH32 | SM50B |
| D 32 | | | | -20 | 31 | 22 | - | - | DH32 | (SM50C) |
| E 32 | | | | -40 | | | - | - | EH32 | - |
| A 36 | 355 | 490-620 | 21 | 0 | | | Fe 510C | S355N/M | AH36 | SM53B |
| D 36 | | | | -20 | 34 | 24 | Fe 510D | S355N/M | DH36 | (SM53C) |
| E 36 | | | | -40 | | | E355E | S355NL/ML | EH36 | - |
| A 40 | 390 | 510-650 | 20 | 0 | | | E390CC | S420N/M | AH40 | (SM58) |
| D 40 | | | | -20 | 41 | 27 | E390DD | S420N/M | DH40 | - |
| E 40 | | | | -40 | | | E390E | S420NL/ML | EH40 | - |

Note: In selecting comparitable steels from this table, attention should be given to the requirements of Table 4.1 and the dimension requirements of the product with respect to Classification Sociey rules.

**Table 4.2 Guidance on steel grades comparable to the normal and high strength hull structural steel grades given in Classification Society rules**

**No. 47** (cont)

## 5. General requirements to welding

### 5.1 Correlation of welding consumables with hull structural steels

5.1.1 For the different hull structural steel grades welding consumables are to be selected in accordance with IACS UR W17 (see Ref.6).

### 5.2 General requirements to preheating and drying out

5.2.1 The need for preheating is to be determined based on the chemical composition of the materials, welding process and procedure and degree of joint restraint.

5.2.2 A minimum preheat of 50° C is to be applied when ambient temperature is below 0° C. Dryness of the welding zone is in all cases to be ensured.

5.2.3 Guidance on recommended minimum preheating temperature for higher strength steel is given in Table 5.1. For automatic welding processes utilising higher heat input e.g. submerged arc welding, the temperatures may be reduced by 50° C. For re-welding or repair of welds, the stipulated values are to be increased by 25° C.

| Carbon equivalent [1] | Recommended minimum preheat temperature (° C) | | |
|---|---|---|---|
| | $t_{comb} \leq 50$ mm [2] | 50 mm < $t_{comb} \leq 70$ mm [2] | $t_{comb} > 70$ mm [2] |
| Ceq ≤ 0.39 | - - | 50 | |
| Ceq ≤ 0.41 | - - | 75 | |
| Ceq ≤ 0.43 | - | 50 | 100 |
| Ceq ≤ 0.45 | 50 | 100 | 125 |
| Ceq ≤ 0.47 | 100 | 125 | 150 |
| Ceq ≤ 0.50 | 125 | 150 | 175 |

**Table 5.1 Preheating temperature**

### 5.3 Dry welding on hull plating below the waterline of vessels afloat

5.3.1 Welding on hull plating below the waterline of vessels afloat is acceptable only on normal and higher strength steels with specified yield strength not exceeding 355 MPa and only for local repairs. Welding involving other high strength steels or more extensive repairs against water backing is subject to special consideration and approval by the Classification Society of the welding procedure.

5.3.2 Low-hydrogen electrodes or welding processes are to be used when welding on hull plating against water backing. Coated low-hydrogen electrodes used for manual metal arc welding should be properly conditioned to ensure a minimum of moisture content.

5.3.3 In order to ensure dryness and to reduce the cooling rate, the structure is to be preheated by a torch or similar prior to welding, to a temperature of minimum 5° C or as specified in the welding procedure.

**No. 47** (cont)

Notes:

1) $$Ceq = C + \frac{Mn}{6} + \frac{Cr + Mo + V}{5} + \frac{Ni + Cu}{15}(\%)$$

2) Combined thickness $t_{comb} = t_1+t_2+t_3+t_4$, see figure

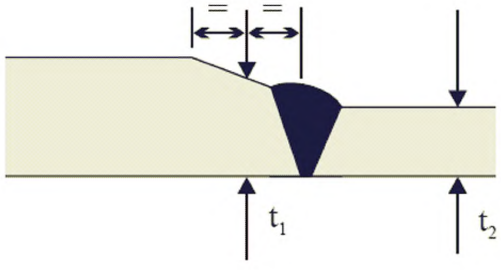


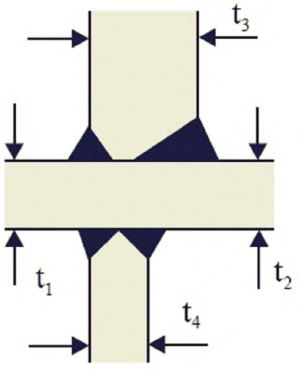

**No. 47** (cont)

## 6. Repair quality standard

### 6.1 Welding, general

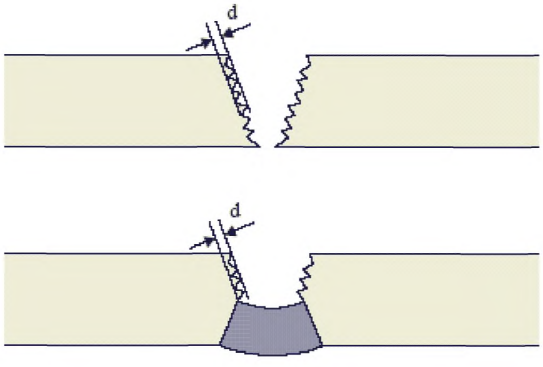


**Fig 6.1 Groove roughness**

| Item | Standard | Limit | Remarks |
|---|---|---|---|
| Material Grade | Same as original or higher | | See Section 4 |
| Welding Consumables | IACS UR W17 (ref. 6) | Approval according to equivalent international standard | |
| Groove / Roughness | See note and Fig 6.1 | d < 1.5 mm | Grind smooth |
| Pre-Heating | See Table 5.1 | Steel temperature not lower than 5°C | |
| Welding with water on the outside | See Section 5.3 | Acceptable for normal and high strength steels | - Moisture to be removed by a heating torch |
| Alignment | As for new construction | | |
| Weld Finish | IACS Recommendation 20 (ref. 10) | | |
| NDE | IACS Recommendation 20 (ref. 10) | At random with extent to be agreed with attending surveyors | |

Note:

Slag, grease, loose mill scale, rust and paint, other than primer, to be removed.

**No. 47** (cont)

### 6.2 Renewal of plates

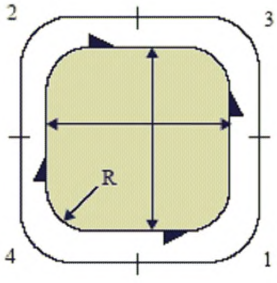


R = 5 x plate thickness
min. 100mm

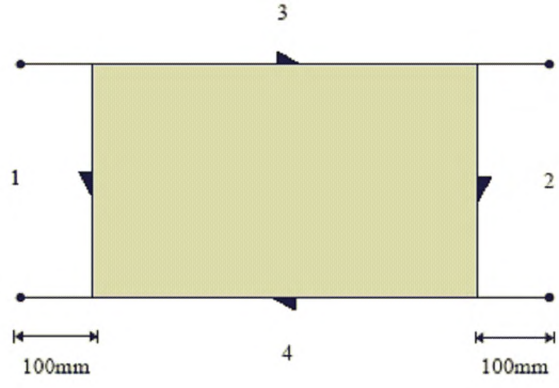


**Fig 6.2 Welding sequence for inserts**

| Item | Standard | Limit | Remarks |
|---|---|---|---|
| Size Insert | Min. 300 x 300 mm<br>R = 5 x thickness<br>Circular inserts:<br>$D_{min}$ = 200 mm | Min. 200 x 200 mm<br>Min R = 100 mm | |
| Marterial Grade | Same as original or higher | | See Section 4. |
| Edge Preparation | As for new construction | | In case of non compliance increase the amount of NDE |
| Welding Sequence | See Fig 6.2<br>Weld sequence is<br>1→ 2 → 3→4 | | For primary members sequence 1 and 2 transverse to the main stress direction |
| Alignment | As for new construction | | |
| Weld Finish | IACS Recommendation 20 (ref. 10) | | |
| NDE | IACS Recommendation 20 (ref. 10) | | |

**No. 47** (cont)

### 6.3 Doublers on plating

Local doublers are normally only allowed as temporary repairs, except as original compensation for openings, within the main hull structure.

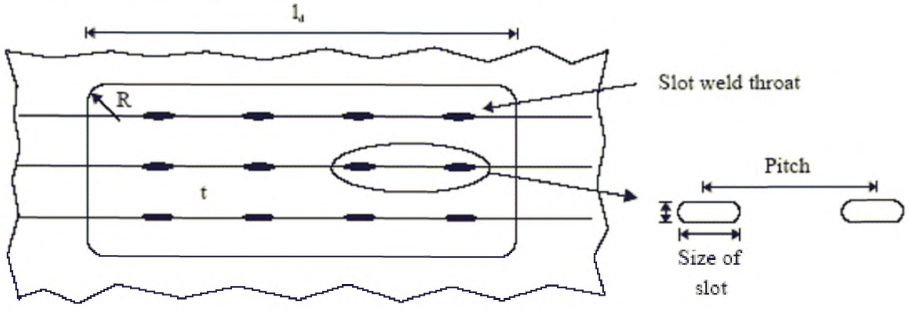


**Fig 6.3 Doublers on plates**

| Item | Standard | Limit | Remarks |
|---|---|---|---|
| Existing Plating | | General: t ≥ 5 mm | For areas where existing plating is less than 5 mm plating a permanent repair by insert is to be carried out. |
| Extent / Size | Rounded off corners. | min 300 x 300 mm<br>R ≥ 50 mm | |
| Thickness of Doubler (td) | td ≤ tp<br>(tp = original thickness of existing plating) | td > tp/3 | |
| Material Grade | Same as original plate | | See Section 4 |
| Edge Preparation | As for [newbuidling] new construction | | Doublers welded on primary strength members: (Le: leg length)<br>when t > Le + 5 mm, the edge to be tapered (1:4) |
| Welding | As for [newbuidling] new construction | | Welding sequence similar to insert plates. |
| Weld Size (throat thicknesss) | Circumferencial and in slots: 0.6 x td | | |
| Slot Welding | Normal size of slot: (80-100) x 2 td<br><br>Distance from doubler edge and between slots:<br>d ≤ 15 td | Max pitch between slots 200 mm<br><br>dmax = 500 mm | For doubler extended over several supporting elements, see Figure 6.3 |
| NDE | IACS Recommendation 20 (ref. 10) | | |

**No. 47** (cont)

### 6.4 Renewal of internals/stiffeners

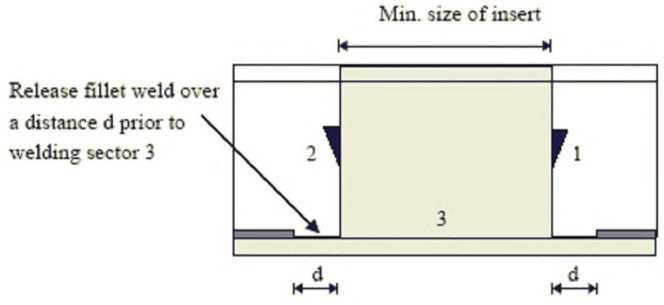


**Fig 6.4 Welding sequence for inserts of stiffeners**

| Item | Standard | Limit | Remarks |
|---|---|---|---|
| Size Insert | Min. 300 mm | Min. 200 mm | |
| Marterial Grade | Same as original or higher | | See Section 4. |
| Edge Preparation | As for new construction. Fillet weld stiffener web / plate to be released over min. d = 150 mm | | |
| Welding Sequence | See Fig 6.4 Welding sequence is 1→ 2 →3 | | |
| Alignment | As for new construction | | |
| Weld Finish | IACS Recommendation 20 (ref. 10) | | |
| NDE | IACS Recommendation 20 (ref. 10) | | |

**No. 47** (cont)

### 6.5 Renewal of internals/stiffeners – transitions inverted angle/bulb profile

The application of the transition is allowed for secondary structural elements.

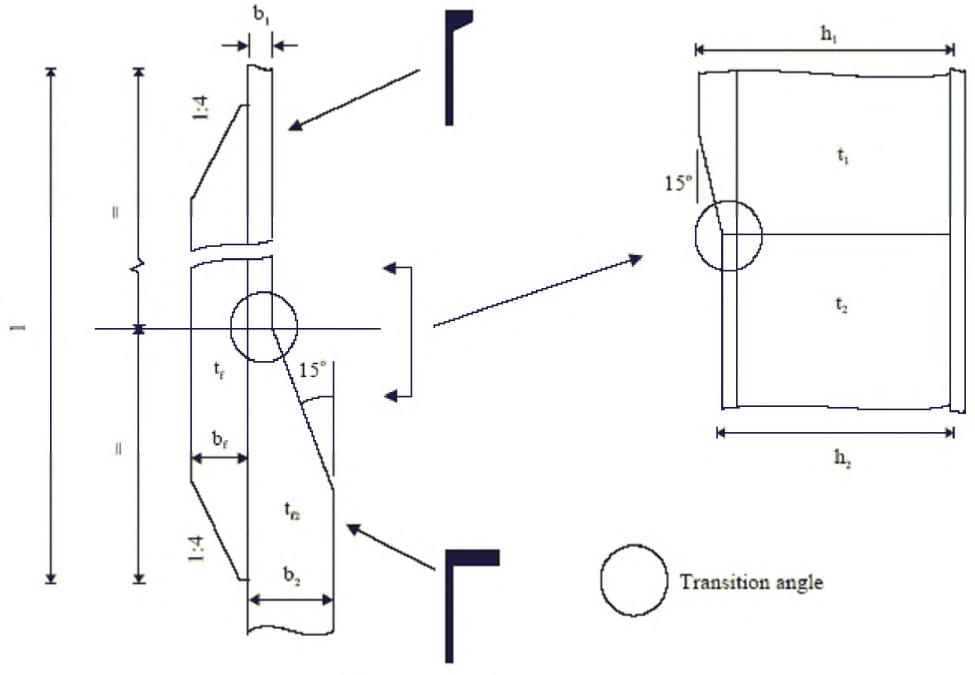


**Fig 6.5 Transition between inverted angle and bulb profile**

| Item | Standard | Limit | Remarks |
|---|---|---|---|
| $(h_1 - h_2)$ | ≤ 025 x b1 | | |
| $\lvert t_1 - t_2 \rvert$ | 2 mm | | Without tapering transition. |
| Transition Angle | 15 degrees | | At any arbitrary section |
| Flanges | $tf = tf_2$<br>$bf = bf_2$ | | |
| Length of Flatbar | 4 x $h_1$ | | |
| Material | | | See Section 4. |

**No. 47** (cont)

### 6.6 Application of Doubling Straps

In certain instances, doubling straps are used as a means to strengthen and reinforce primary structure. Where this has been agreed and approved, particular attention should be paid to:

- the end termination points of the straps, so that toe support is such that no isolated hard point occurs.
- in the case of application of symmetrical or asymmetrical-ended straps, the corners at the end of the tapering should be properly rounded.
- any butts between lengths of doubling straps, so that there is adequate separation of the butt weld from the primary structure below during welding, and so that a high quality root run under controlled circumstances is completed prior to completing the remainder of the weld. Ultrasonic testing should be carried out on completion to verify full penetration.

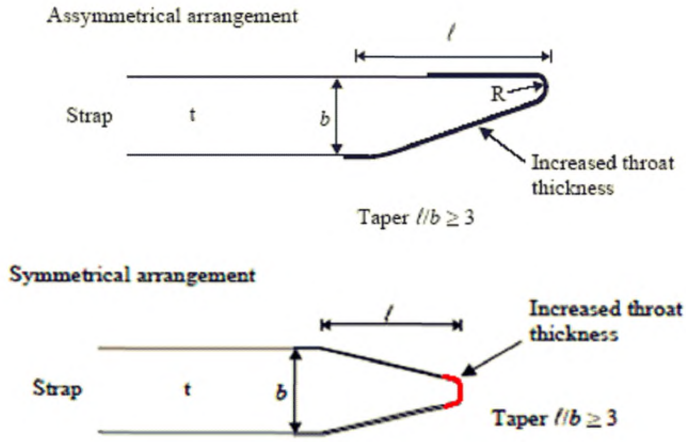


**Fig 6.6 Application of Doubling Straps**

| Item | Standard | Limit | Remarks |
|---|---|---|---|
| Tapering | *l/b>3* | | Special consideration to be drawn to design of strap terminations in fatigue sensitive areas. |
| Radius | 0.1 x *b* | min 30 mm | |
| Material | | | See paragraph 2.0 General requirement to materials. |
| Weld Size | | | Depending on number and function of straps. Throat thickness to be increased 15 % toward ends. |
| Welding | Welding sequence from middle towards the free ends | | See sketch. For welding of lengths > 1000 mm step welding to be applied. |

**No. 47** (cont)

### 6.7 Welding of pitting corrosion

Notes:

Shallow pits may be filled by applying coating or pit filler. Pits can be defined as shallow when their depth is less that 1/3 of the original plate thickness.

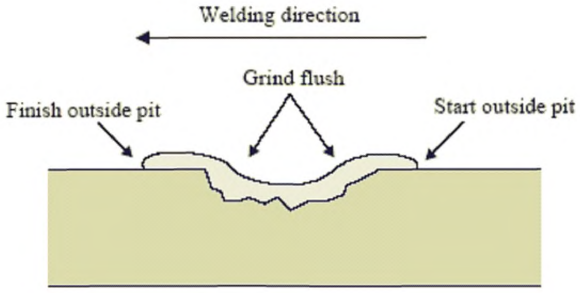


**Fig 6.7 Welding of pits**

| Item | Standard | Limit | Remarks |
|---|---|---|---|
| Extent / Depth | Pits / grooves are to be welded flush with the original surface. | If deep pits or grooves are clustered together or remaining thickness is less than 6 mm, the plates should be renewed. | See also IACS Recommendation 12 (ref. 9) |
| Cleaning | Heavy rust to be removed | | |
| Pre-Heating | See Table 5.1 | Required when ambient temperature < 5°C | Always use propane torch or similar to remove any moisture |
| Welding Sequence | Reverse direction for each layer | | See also IACS Recommendation 12 (ref. 9) |
| Weld Finish | IACS Recommendation 20 (ref. 10) | | |
| NDE | IACS Recommendation 20 (ref. 10) | Min. 10% extent | Preferably MPI |

Reference is made to TSCF Guidelines, Ref. 2 & 3.

**No. 47** (cont)

### 6.8 Welding repairs for cracks

In the event that a crack is considered weldable, either as a temporary or permanent repair, the following techniques should be adopted as far as practicable. Run-on and run-off plates should be adopted at all free edges.

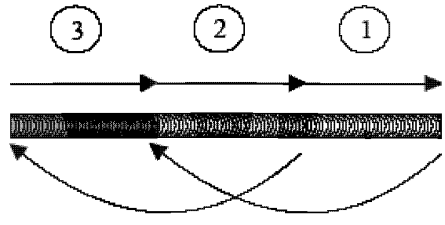


**Fig 6.8.a Step back technique**

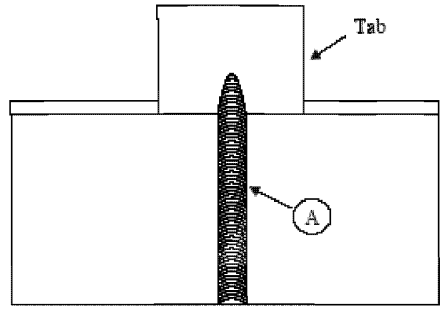


**Fig 6.8.b End crack termination**

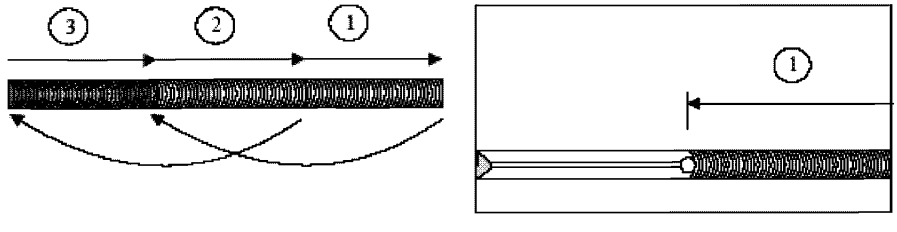


**Fig 6.8.c Welding sequence for cracks with length less than 300 mm**

**No. 47** (cont)

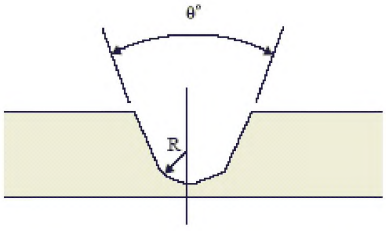


**Fig 6.8.d Groove preparation (U-groove left and V-groove right)**

| Item | Standard | Limit | Remarks |
|---|---|---|---|
| Groove Preparation | $\theta$ = 45-60°<br>r = 5 mm | | For through plate cracks as for newbuilding. Also see Fig 6.8.d |
| Termination | Termination to have slope 1:3 | | For cracks ending on edges weld to be terminated on a tab see Fig 6.8.b |
| Extent | On plate max. 400 mm length. Vee out 50 mm past end of crack | On plate max 500 mm. Linear crack, not branched | |
| Welding Sequence | See Fig 6.8.c for sequence and direction | For cracks longer than 300 mm step-back technique should be used Fig 6.8.a | Always use low hydrogen welding consumables |
| Weld Finish | IACS Recommendation 20 (ref. 10) | | |
| NDE | IACS Recommendation 20 (ref. 10) | 100 % MP or PE of groove | 100 % surface crack detection + UE or RE for butt joints |

End of Part B,
End of Document

**No.55**
(March 1999)
(Rev.1 June 2016)

# GENERAL DRY CARGO SHIPS -

# Guidelines for Surveys, Assessment and Repair of Hull Structure

IACS Rec. 1999/Rev.1 2016

# IACS

INTERNATIONAL ASSOCIATION OF CLASSIFICATION SOCIETIES



# GENERAL DRY CARGO SHIPS

## Guidelines for Surveys, Assessment and Repair of Hull Structure

(1999)
(Rev.1 June 2016)

**IACS -International Association of Classification Societies, 1999**
**(Rev.1 June 2016)**

All rights reserved.

Except as permitted under current legislation no part of this work may be photocopied, stored in a retrieval system, published, performed in public, adapted, broadcast, transmitted, recorded or reproduced in any form or by any means, without prior permission of the copyright owner.

Where IACS has granted written permission for any part of this publication to be quoted such quotation must include acknowledgment to IACS.

Enquiries should be addressed to The Secretary General ~~The Permanent Secretary~~, International Association of Classification Societies Ltd,

Permanent Secretariat
36 Broadway
London
United Kingdom
SWIH 0BH

T: +44 (0)20 7976 0660
F: +44 (0)20 7808 1100

email: gost.e-ecolog.ru
website: gost.e-ecolog.ru

~~5 Old Queen Street,~~
~~London, SW1H9JA~~
~~Telephone: +44 (0)171 976 0660~~
~~Fax: +44 (0)171 976 0440~~
~~INTERNET:~~gost.e-ecolog.ru

**TERMS AND CONDITIONS**

"The International Association of Classification Societies (IACS), its Member Societies and IACS Ltd. and their directors, officers, members, employees and agents (on behalf of whom this notice is issued) shall be under no liability or responsibility in contact or negligence or otherwise howsoever to any person in respect of any information or advice expressly or impliedly given in this document, or in respect of any inaccuracy herein or omission herefrom or in respect of any act or omission which has caused or contributed to this document being issued with the information or advice it contains (if any).

Without derogating from the generality of the foregoing, neither the International Association of Classification Societies (IACS) nor IACS Ltd. nor its Member Societies and their officers, members, employees or agents shall be liable in negligence or otherwise howsoever for any direct, indirect or consequential loss to any person caused by or arising from any information, advice, inaccuracy or omission ~~being~~ given or contained herein or any act or omission causing or contributing to any such information, advice, inaccuracy or omission ~~being~~ given or contained herein."

Any dispute concerning the provision of material herein is subject to the exclusive jurisdiction of the English courts and will be governed by English Law.

*Published in 1999 for the International Association of Classification Societies.*

# Contents


## 1 Introduction

## 2 Class survey requirements

### 2.1 Periodical classification surveys

2.1.1 General
2.1.2 Special Survey
2.1.3 Annual Survey
2.1.4 Intermediate Survey
2.1.5 ~~Drydock~~ Bottom Survey

### 2.2 Damage and repair surveys

### 2.3 Voyage repairs and maintenance

## 3 Technical background for surveys

### 3.1 General

### 3.2 Definitions

### 3.3 Structural damages and deterioration

3.3.1 General
3.3.2 Material wastage
3.3.3 Fractures
3.3.4 Deformations

### 3.4 Structural detail failures and repairs

### ~~3.5 IACS Early Warning Scheme (EWS) for reporting of significant damage~~

## 4 Survey planning, preparation and execution

### 4.1 General

### 4.2 Conditions for survey

### 4.3 Access arrangement and safety

### 4.4 Equipment and tools

4.4.1 Personnel protective equipment
4.4.2 Personnel survey equipment
4.4.3 Thickness measurement and fracture detection

### 4.5 Survey at sea or at anchorage

### 4.6 Documentation on board

# 5 Structural detail failures and repairs

## 5.1 General

## 5.2 Catalogue of structural detail failures and repairs

### Part 1 Cargo hold region

Area 1 Upper deck structure
Area 2 Side structure
Area 3 Transverse bulkhead structure
Area 4 Tween deck structure
Area 5 Double bottom structure

### Part 2 Fore and aft end regions

Area 1 Fore end structure
Area 2 Aft end structure
Area 3 Stern frame, rudder arrangement and propeller shaft support

### Part 3 Machinery and accommodation spaces

Area 1 Engine room structure
Area 2 Accommodation structure

# 1 Introduction

The International Association of Classification Societies (IACS) is introducing a series of ~~manuals~~ Guidelines with the intention of ~~giving guidelines to~~ assisting the Surveyors of IACS Member Societies, and other interested parties involved in the survey, assessment and repair of hull structures for certain ship types.

~~This manual gives guidelines~~ The Guidelines are intended for a general dry cargo ship, single skin, which is designed with one or more decks specifically for the carriage of diverse forms of dry cargo.

**Figure 1** shows a typical general arrangement of a general dry cargo ship with single tween deck.

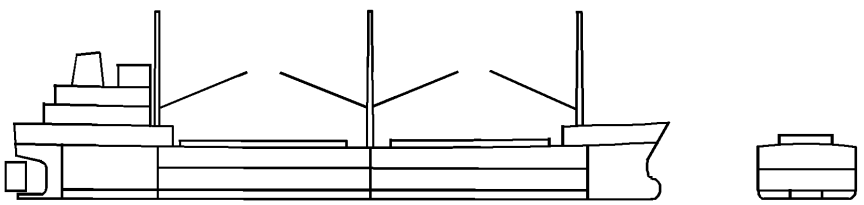

**Figure 1 General view of a typical general dry cargo ship**

The ~~guidelines~~ Guidelines focus on the IACS Member Societies' survey procedures but may also be useful in connection with inspection/examination schemes of other regulatory bodies, owners and operators.

The ~~manual~~ Guidelines include~~s~~ a review of survey preparation ~~guidelines~~ criteria which cover the safety aspects related to the performance of the survey, the necessary access facilities, and the preparation necessary before the surveys can be carried out.

The ~~survey guidelines~~ Guidelines encompass the different main structural areas of the hull where damages have been recorded, focusing on the main features of the structural items of each area.

An important feature of the ~~manual~~ Guidelines is the inclusion of the section which illustrates examples of structural deterioration and damages related to each structural area and gives what to look for, possible cause, and recommended repair methods, when considered appropriate.

The Procedure for Failure Incident Reporting and Early Warning of Serious Failure Incidents - "~~IACS~~ Early Warning Scheme - ~~(~~EWS~~)~~", with the emphasis on the proper reporting of significant hull damages by the respective classification societies, will enable the analysis of problems as they arise, including revisions of these Guidelines.

~~This manual has~~ These Guidelines have been developed using the best information currently available. It is intended only as guidance in support of the sound judgment of surveyors, and is to be used at the surveyors' discretion. It is recognized that alternative and satisfactory methods are already applied by surveyors. Should there be any doubt with regard to interpretation or validity in connection with particular applications, clarification should be obtained from the Classification Society concerned.

**Figures 2 (a)** and **(b)** show cargo hold structural configurations for general dry cargo ships. As

many different cargoes are carried by general dry cargo ships, hull structures differ in accordance with their purpose. These guidelines intend to cover general dry cargo ships ~~those ships~~.

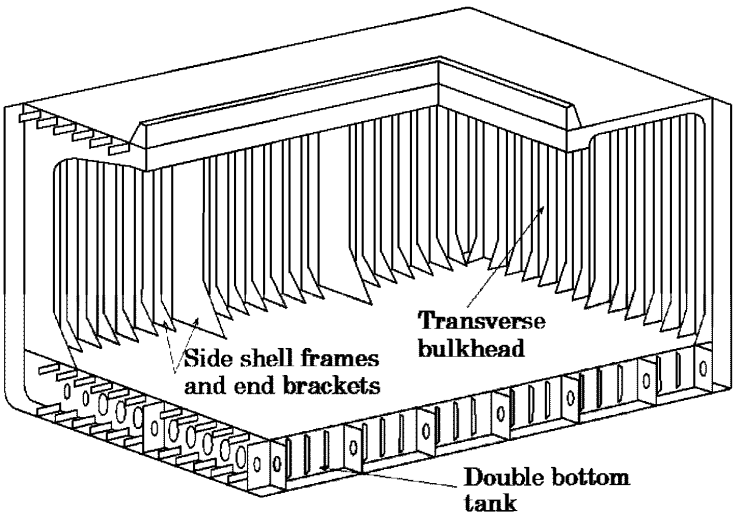


**(a) Single deck ship**

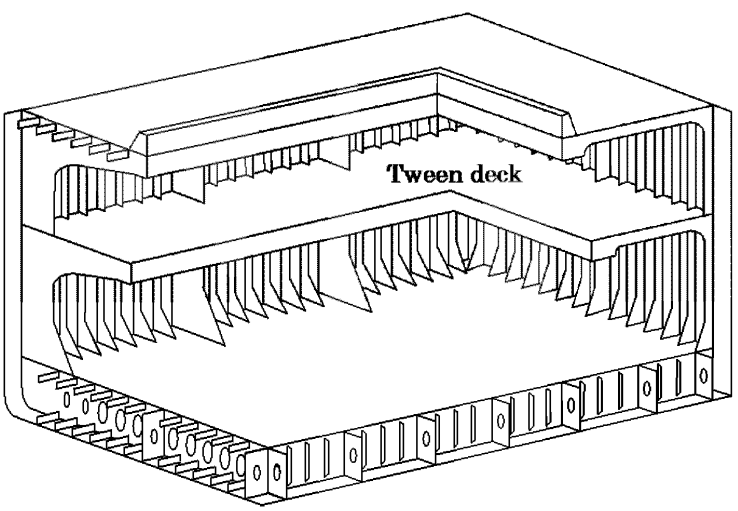


**(b) Tween deck ship**

**Figure 2 Cargo hold structural configurations for general dry cargo ships**

# 2 Class survey requirements

## 2.1 Periodical classification surveys

### 2.1.1 General

For Class the programme of ***periodical hull surveys*** is of prime importance as far as structural assessment of the cargo holds, and the adjacent tanks is concerned. The programme of ***periodical hull surveys*** consists of ***Annual***, ***Intermediate***, and ***Special Surveys***. The Purpose of the ***Annual*** and ***Intermediate Surveys*** is to confirm that the general condition of the vessel is maintained at a satisfactory level. The ***Special Surveys*** of the hull structure are carried out at five year intervals with the purpose of establishing the condition of the structure to confirm that the structural integrity is satisfactory in accordance with the Classification Requirements, and will remain fit for its intended purpose until the next ***Special Survey***, subject to proper maintenance and operation. The ***Special Surveys*** are also aimed at detecting possible damage and to establish the extent of any deterioration.

The ***Annual***, ***Intermediate***, and ***Special Surveys*** are briefly introduced in the following **2.1.2**- **2.1.4**. The surveys are carried out taking into account ~~in accordance with~~ the requirements specified in the Unified Requirements Z7 and Z7.1, alongside the Rules and Regulations of each IACS Member Society.

### 2.1.2 Special Survey

The ***Special Survey*** concentrates on examination in association with thickness determination. The report of the thickness measurement is recommended to be retained on board. ***Protective coating condition*** will be recorded for particular attention during the survey cycle. From 1991 it is a requirement for new ships to apply a ***protective coating*** to the structure in ***water ballast tanks*** which form part of the hull boundary.

### 2.1.3 Annual Survey

At ***Annual Surveys*** overall survey is required. For saltwater ballast tanks, examinations may be required as a consequence of the Intermediate or Special Surveys.

### 2.1.4 Intermediate Survey

At ***Intermediate Surveys***, in addition to the surveys required for Annual Surveys, examination of cargo holds and ballast tanks is required depending on the ship's age.

### 2.1.5 ~~Drydock~~ Bottom Survey

~~***Drydock***~~ ***Bottom Surveys*** are requested twice during the Special Survey interval and they should be generally carried out in dry dock. In some cases it may be possible to replace one ~~***Drydock***~~ ***Bottom Survey*** in dry dock with an ***In-Water Survey***. This will depend on the survey requirements of the relevant Classification Society.

## 2.2 Damage and repair surveys

Damage surveys are occasional surveys which are, in general, outside the programme of Periodical hull surveys and are requested as a result of hull damage or other defects. It is the responsibility of the owner or his representative to inform the Classification Society concerned when such damage or defect could impair the structural capability or watertight integrity of the hull. The damages should be inspected and assessed by the Society's surveyors and the relevant repairs, if needed, are to be performed. In certain cases,

depending on the extent, type and location of the damage, permanent repairs may be deferred to coincide with the planned periodical survey.
In cases of repairs intended to be carried out by riding crew during voyage, complete procedure including all necessary surveys is to be submitted to and agreed upon by the Classification Society reasonably in advance.

## 2.3 Voyage repairs and maintenance

Where repairs to hull, machinery or equipment, which affect or may affect classification, are to be carried out by a riding crew during a voyage they are to be planned in advance. A complete repair procedure including the extent of proposed repair and the need for surveyor's attendance during the voyage is to be submitted to and agreed upon by the Surveyor reasonably in advance. Failure to notify the Classification Society, in advance of the repairs, may result in suspension of the vessel's class. The above is not intended to include maintenance and overhaul to hull, machinery and equipment in accordance with manufacturers' recommended procedures and established marine practice and which does not require the Classification Society's approval; however, any repair as a result of such maintenance and overhauls which affects or may affect classification is to be noted in the ship's log and submitted to the attending Surveyor for use in determining further survey requirements.
See IACS Unified Requirement Z13, available on the IACS website: gost.e-ecolog.ru

# 3 Technical background for surveys

## 3.1 General

**3.1.1** The purpose of carrying out the periodical hull surveys is to detect possible structural defects and damages and to establish the extent of any deterioration. To help achieve this and to identify key locations on the hull structure that might warrant special attention, knowledge of any historical problems of the particular ship or other ships of a similar class is to be considered if available. In addition to the periodical surveys, occasional surveys of damages and repairs are carried out. Records of typical occurrences and chosen solutions should be available in the ship's history file.

## 3.2 Definitions

**3.2.1** For clarity of definition and reporting of survey data, it is recommended that standard nomenclature for structural elements be adopted. Typical sections in way of cargo holds are illustrated in **Figures 3 (a)** and **(b)**. These figures show the generally accepted nomenclature.

The terms used in these ~~guidelines~~ Guidelines are defined as follows:

(a) **Ballast Tank** is a tank which is being used primarily for salt water ballast.

(b) **Spaces** are separate compartments including holds and tanks.

(c) **Overall Inspection** is an inspection intended to report on the overall condition of the hull structure and determine the extent of additional close-up inspections.

(d) **Close-up Inspection** is an inspection where the details of structural components are within the close visual inspection range of the surveyors, i.e. normally within reach of hand.

(e) **Transverse Section** includes all longitudinal members such as plating, longitudinals and girders at the deck, side, bottom and inner bottom. For transversely framed vessels, a transverse section includes adjacent frames and their end connections in way of transverse sections.

(f) **Representative Spaces** are those which are expected to reflect the condition of other spaces of similar type and service and with similar corrosion protection systems. When selecting representative spaces, account should be taken of the service and repair history on board.

(g) **Transition Region** is a region where discontinuity in longitudinal structure occurs, e.g. at forward bulkhead of engine room, collision bulkhead and bulkheads of deep ~~cargo~~ tanks in cargo hold region.

(h) **Suspect Areas** are locations showing Substantial Corrosion and/or are considered by the Surveyor to be prone to rapid wastage.

(i) **Substantial Corrosion** is an extent of corrosion such that assessment of corrosion pattern indicates a wastage in excess of 75% of allowable margins, but within acceptable limits.

(j) **Coating condition** is defined as follows:

| | |
|---|---|
| GOOD | condition with only minor spot rusting; |
| FAIR | condition with local breakdown at edges of stiffeners and weld connections and/or light rusting over 20% or more of areas under consideration, but less than as defined for POOR condition; |
| POOR | condition with general breakdown of coating over 20% or more of areas or hard scale at 10% or more of areas under consideration. |

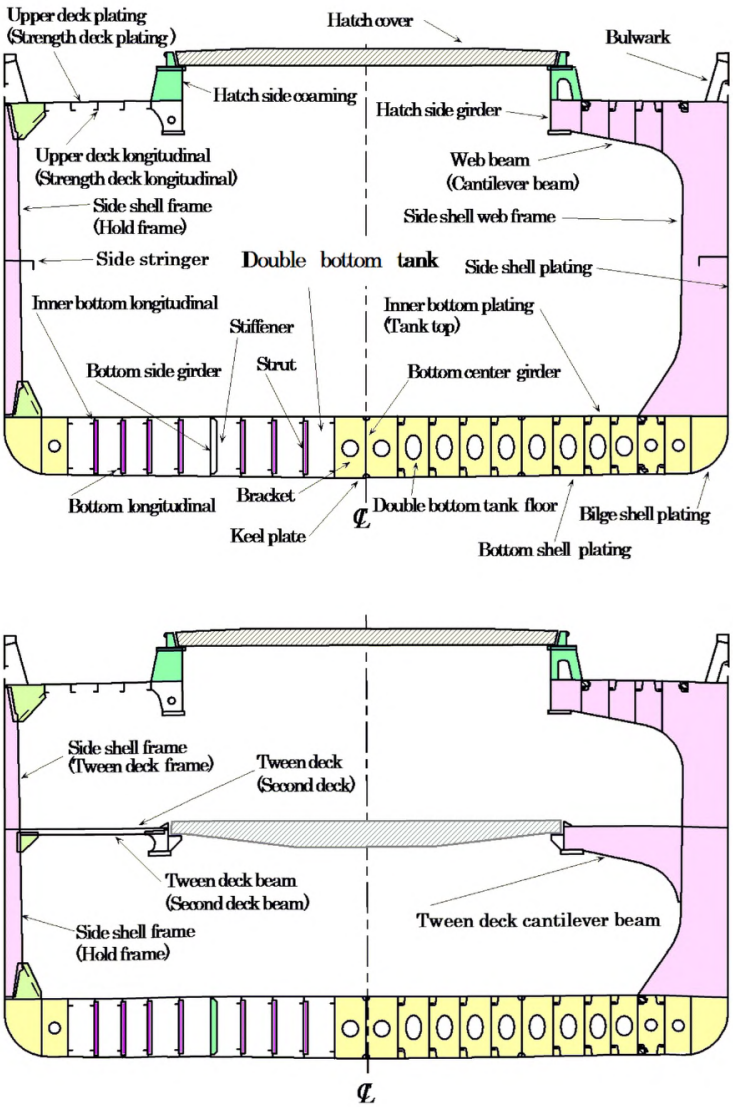


**Figure 3 (a)** **Nomenclature for typical transverse section in way of cargo hold**

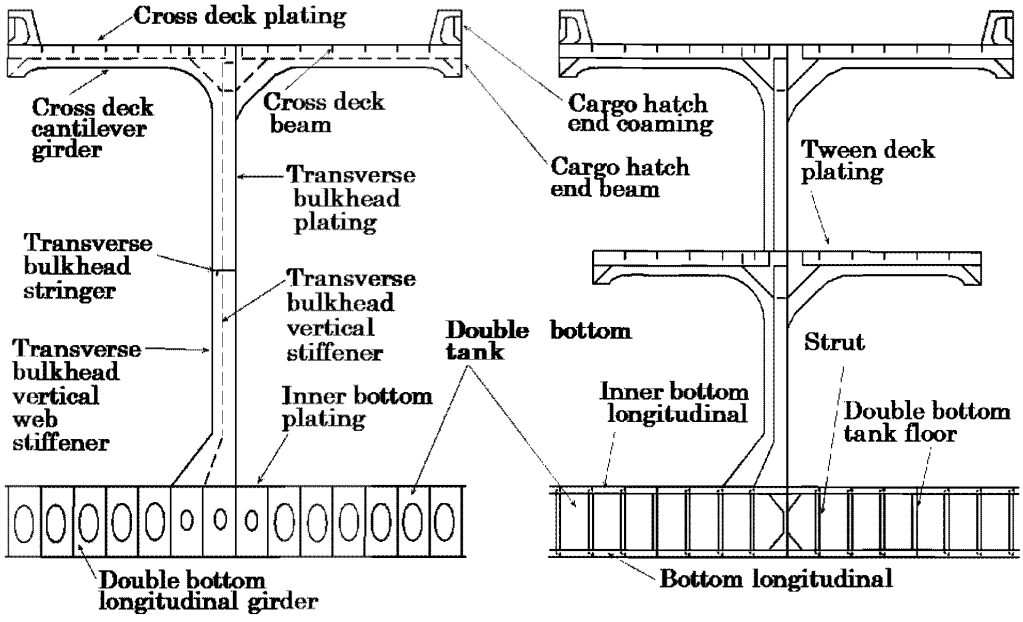


**Figure 3 (b) Nomenclature for typical watertight bulkhead**

## 3.3 Structural damages and deterioration

### 3.3.1 General

In the context of these Guidelines ~~this manual~~, structural damages and deterioration imply deficiencies caused by:

- excessive corrosion
- design faults
- material defects or bad workmanship
- navigation in extreme weather conditions
- loading and unloading procedure
- wear and tear
- contact (with quay side, ice, touching underwater objects, etc.)

but not as a direct consequence of accidents such as collisions, groundings and fire/explosions.

Deficiencies are normally recognized as:

- material wastage
- fractures
- deformations

The various types of deficiencies and where they may occur are discussed in more detail as follows:

### 3.3.2 Material wastage

In addition to being familiar with typical structural defects likely to be encountered during a survey, it is necessary to be aware of the various forms and possible location of corrosion that may occur to the decks, holds, tanks and other structural elements.

***General corrosion*** appears as a non-protective, friable rust which can occur uniformly

on hold or tank internal surfaces that are uncoated. The rust scale continually breaks off, exposing fresh metal to corrosive attack. Thickness loss cannot usually be judged visually until excessive loss has occurred. Failure to remove mill scale during construction of the ship can accelerate corrosion experienced in service. Severe general corrosion in all types of ships, usually characterized by heavy scale accumulation, can lead to extensive steel renewals.

***Grooving corrosion*** is often found in or beside welds, especially in the heat affected zone. The corrosion is caused by the galvanic current generated from the difference of the metallographic structure between the heat affected zone and base metal. Coating of the welds is generally less effective compared to other areas due to rough surfaces which exacerbate the corrosion. The grooving corrosion may lead to stress concentrations and further accelerate the corrosion. Grooving corrosion may be found in the base material where coating has been scratched or the metal itself has been mechanically damaged.

***Pitting corrosion*** is often found in the bottom plating of ballast tanks and other horizontal surfaces such as side girders, horizontal platform, etc. If there is a place which is liable to have corrosion due to local breakdown of coating, pitting corrosion starts. ~~Once pitting corrosion starts, it is exacerbated by galvanic current between the pit and other metal.~~

***Erosion*** which is caused by the effect of liquid and ***abrasion*** caused by mechanical effect may also be responsible for material wastage.

### 3.3.3 Fractures

In most cases fractures are found at locations where stress concentrations occur. Weld defects, flaws, and where lifting fittings used during the construction of the ship are not properly removed are often recognized as areas of stress concentration when fractures are found. If fractures have occurred under repeated stresses which are below the yielding stress, the fractures are called fatigue fractures. In addition to the cyclic stresses caused by wave forces, fatigue fractures are also caused by vibration forces derived from main engine or propeller especially in the afterward part of the hull. If the initiation points of the fractures are not apparent, the structure on the other side of the plating should be examined.

Fractures may not be readily visible due to lack of cleanliness, difficulty of access, poor lighting or compression of the fracture surfaces at the time of inspection. It is therefore important to identify, clean, and closely inspect potential problem areas.

***Fracture initiating at latent defects*** in welding more commonly appear at the beginning or end of a run of welding, or rounding corners at the end of a stiffener, or at an intersection. Special attention should be paid to welding at toes of brackets, cut-outs, and intersections of welds. Fractures may also be initiated by undercutting the weld in way of stress concentrations. Although now less common, intermittent welding may cause problems because of the introduction of stress concentrations at the ends of each length of weld.

It should be noted that fractures, particularly ***fatigue fractures*** due to repeated stresses, may lead to serious damage, e.g. a fatigue fracture in a frame may propagate into shell plating and affect the watertight integrity of the hull. In extreme weather conditions the shell fracture could extend further resulting in the loss of part of the shell plating and

consequent flooding of cargo hold.

### 3.3.4 Deformations

Deformation of structure is caused by in-plane load, out-of -plane load or combined loads. Such deformation is often identified as local deformation, such as deformation of panel including stiffener, or global deformation; such as deformation of structure including plating, beam, frame, girder, floor, etc.

~~If in the process of the deformation large deformation is caused due to small increase of the load, the process is called buckling.~~ If a small increase of the in-plane loads cause large deformations, this process is called buckling.

Deformations are often caused by impact loads/contact and inadvertent overloading. Damages due to ***bottom slamming and wave impact forces*** are, in general, found in the forward part of the hull, although stern seas (pooping) have resulted in damages in way of the after part of the hull.

In the case of ***damages due to contact*** with other objects, special attention should be drawn to the fact that although damages to the shell plating may look small from the outboard side, in many cases the internal members are heavily damaged.

***Permanent buckling*** may arise as a result of overloading, overall reduction in thickness due to corrosion, or contact damage. Elastic ***buckling*** will not be directly obvious but may be detected by coating damage, stress lines or shedding of scale. Buckling damages are often found in webs of web frames or floors. In many cases this is due to corrosion of webs/floors, too wide a spacing of stiffeners or wrongly positioned lightening holes, man-holes or slots in webs/floors.

Finally, it should be noted that inadvertent overloading may cause significant damages. In general, however, major causes of damages are associated with excessive corrosion and contact damage.

## 3.4 Structural detail failures and repairs

**3.4.1** For examples of structural defects which have occurred in service, attention is drawn to ***Section 5 of these ~~guidelines~~ Guidelines***. It is suggested that Surveyors and inspectors should be familiar with the contents of ***Section 5*** before undertaking a survey.

**3.4.2** If replacement of defective parts must be postponed, the following temporary measures may be acceptable at the S~~s~~urveyor's discretion; notwithstanding that carrying out a permanent repair straightaway is the preferable option.

(a) The affected area may be sandblasted and painted in order to reduce corrosion rate.
(b) Doubler may be applied over the affected area. ~~In case of bucking under compression, however, special consideration should be paid.~~ Special consideration should be given to buckled areas under compression.
(c) Stronger members may support weakened stiffeners by applying temporarily connecting elements.
(d) Cement box may be applied over the affected area.

A suitable condition of class should be imposed when temporary measures are accepted.

## 3.5 IACS Early Warning Scheme (EWS) for reporting of significant hull damage

**3.5.1** IACS has organised and set up a system to permit the collection, and dissemination amongst Member Societies of information (while excluding a ship's identity) on major hull damages.

**3.5.2** The principal purpose of the IACS Early Warning Scheme is to enable a Classification Society with experience of a specific damage to make this information available to the other societies so that action can be implemented to avoid repetition of damage to hulls where similar structural arrangements are employed.

**3.5.3** These guidelines have incorporated the experience gained from IACS EWS reporting.

# 4 Survey planning, preparation and execution

## 4.1 General

**4.1.1** The owner should be aware of the scope of the forth coming survey and instruct those responsible, such as the master or the superintendent, to prepare necessary arrangements. If there is any doubt, the Classification Society concerned is to be consulted.

**4.1.2** Survey execution will naturally be heavily influenced by the type of survey to be carried out. The scope of survey will have to be determined prior to the execution.

**4.1.3** When deemed prudent and/or required by virtue of the periodic classification survey conducted, the surveyor should study the ship's structural arrangements and review the ship's operating and survey history and those of sister ships, where possible, to determine any known potential problem areas particular to the class of the ship. Sketches of typical structural elements should be prepared in advance so that any defects and/or ultrasonic thickness measurements can be recorded rapidly and accurately.

## 4.2 Conditions for survey

**4.2.1** The owner is to provide the necessary facilities for a safe execution of the survey.

**4.2.2** Tanks and spaces are to be safe for access, i.e. gas freed (marine chemist certificate), ventilated, etc.

**4.2.3** Tanks and spaces are to be sufficiently clean and free from water, scale, dirt, oil residues, etc. and sufficient illumination is to be provided, to reveal corrosion, deformation, fractures, damages or other structural deterioration. In particular this applies to areas which are subject to thickness measurement.

## 4.3 Access arrangement and safety

**4.3.1** In accordance with the intended survey, measures are to be provided to enable the hull structure to be examined in a safe and practical way.

**4.3.2** In accordance with the intended survey in cargo holds and salt water ballast tanks a secure and acceptable means of access is to be provided. This can consist of permanent staging, temporary staging or ladders, lifts and movable platforms, or other equivalent means.

**4.3.3** In addition, particular attention should be given to the following guidance:

(a) Prior to entering tanks and other enclosed spaces, e.g. chain lockers, void spaces, it is necessary to ensure that the oxygen content is to be tested and confirmed as safe. A responsible member of the crew should remain at the entrance to the space and if possible communication links should be established with both the bridge and engine room. Adequate lighting should be provided in addition to a hand held torch (flashlight).

(b) In tanks where the structure has been coated and recently deballasted, a thin slippery film may often remain on the surfaces. Care should be taken when inspecting such spaces.

(c) The removal of scale can be extremely difficult. The removal of scale by hammering may cause sheet scale to fall. When using a chipping or scaling hammer care should be taken to protect eyes, and where possible safety glasses should be worn.

If the structure is heavily scaled then it may be necessary to request de-scaling before conducting a satisfactory visual examination.

(d) Owners or their representatives have been known to request that a survey be carried out from the top of the cargo during discharging operations. For safety reason, surveys must not to be carried out during discharging operations in the hold.

(e) When entering a cargo hold or tank the bulkhead vertical ladders should be examined prior to descending to ensure that they are in good condition and rungs are not missing or loose. If holds are being entered when the hatch covers are in the closed position, then adequate lighting should be arranged in the holds. One person at a time should descend or ascend the ladder.

(f) If a portable ladder is used for survey purposes, the ladder should be in good condition and fitted with adjustable feet, to prevent it from slipping. Two crew members should be in attendance in order that the base of the ladder is adequately supported during use. The remains of cargo, in particular fine dust, on the tank top should be brushed away as this can increase the possibility of the ladder feet slipping.

(g) If an extending/articulated ladder (frame walk) is used to enable the examination of upper portions of cargo structure, the ladder should incorporate a hydraulic locking system and a built in safety harness. Regular maintenance and inspection of the ladder should be confirmed prior to its use.

(h) If a hydraulic arm vehicle ("Cherry Picker") is used to enable the examination of the upper parts of the cargo hold structure, the vehicle should be operated by qualified personnel and there should be evidence that the vehicle has been properly maintained. The standing platform should be fitted with a safety harness. For those vehicles equipped with a self leveling platform, care should be taken that the locking device is engaged after completion of maneuvering to ensure that the platform is fixed.

(i) Staging is the most common means of access provided especially where repairs or renewals are being carried out. It should always be correctly supported and fitted with handrails. Planks should be free from splits and lashed down. Staging erected hastily by inexperienced personnel should be avoided.

(j) In double bottom tanks there will often be a build up of mud on the bottom of the tank and this should be removed, in particular in way of tank boundaries, suction and sounding pipes, to enable a clear assessment of the structural condition.

## 4.4 Equipment and tools[1]

### 4.4.1 Personal protective equipment

The following protective clothing and equipment to be worn as applicable during the surveys:

(a) ***Working clothes***: Working clothes should be of a low flammablility type and be easily visible.

(b) ***Head protection***: Hard hat (metal hats are not allowed) shall always be worn outside office building/unit accommodations.

(c) ***Hand and arm protection***: Various types of gloves are available for use, and these

should be used during all types of surveys. Rubber/plastic gloves may be necessary when working in cargo holds.

(d) ***Foot protection***: Safety shoes or boots with steel toe caps and non slip soles shall always be worn outside office buildings/unit accommodations. Special footwear may be necessary on slippery surfaces or in areas with chemical residues.

(e) ***Ear protection***: Ear muffs or ear plugs are available and should be used when working in noisy areas. As a general rule, you need ear protection if you have to shout to make yourself understood by someone standing close to you.

(f) ***Eye protection***: Goggles should always be used when there is danger of solid particles or dust getting into the eyes. Protection against welding arc flashes and ultraviolet light should also be considered.

(g) ***Breathing protection***: Dust masks shall be used for protection against the inhalation of harmful dusts, paint spraying and sand blasting. Gas masks and filters should be used by personnel working for short periods in an atmosphere polluted by gases or vapour.
(Self-contained breathing apparatus: Surveyors shall not enter spaces where such equipment is necessary due to unsafe atmosphere. Only those who are specially trained and familiar with such equipment should use it and only in case of emergency).

(h) ***Lifejacket***: Recommended to be used when embarking/disembarking ships offshore, from/to pilot boat.

### 4.4.2 Personnel survey equipment[2]

The following survey equipment is to be used as applicable during the surveys:

(a) ***Torches***: Torches (Flashlights) approved by a competent authority for use in a flammable atmosphere shall be used in gas dangerous areas. A high intensity beam type is recommended for in-tank inspections. Torches are recommended to be fitted with suitable straps so that both hands may be free.

(b) ***Hammer***: In addition to its normal purposes the hammer is recommended for use during surveys inside units, tanks etc. as it may be most useful for the purpose of giving distress signal in case of emergency.

(c) ~~***Oxygen analyser/Multigas detector***~~: For verification of acceptable atmosphere prior to tank entry, pocket size instruments which give an audible alarm when unacceptable limits are reached are recommended. Such equipment shall have been approved by national authorities.

(d) ***Safety belts and lines***: Safety belts and lines should be worn where high risk of falling down from more than 3 meters is present.

(e) ***Radiation meter***: For the purpose of detection of ionizing radiation (X or gamma rays) caused by radiographic examination, a radiation meter of the type which gives an audible alarm upon detection of radiation is recommended.

[1+2] Reference should also be made to IACS PR37 and IACS Recommendation 72.

#### 4.4.3 Thickness measurement and fracture detection

(a) Thickness measurement is to comply with the requirements of the Classification Society concerned. Thickness measurement should be carried out at points that adequately represent the nature and extent of any corrosion or wastage of the respective structure (plate, web, etc.).

(b) Thickness measurement is normally carried out by means of ultrasonic test equipment. The accuracy of the equipment is to be proven as required.

(c) The thickness measurement is to be carried out by a qualified company certified by the relevant Classification Society.

(d) One or more of the following fracture detection procedures may be required if deemed necessary and should be operated by experienced qualified technicians:
- radiographic equipment
- ultrasonic equipment
- magnetic particle equipment
- dye penetrant

## 4.5 Survey at sea or anchorage[3]

**4.5.1** Voyage surveys may be accepted provided the survey party is given the necessary assistance from the shipboard personnel. The necessary precautions and procedures for carrying out the survey are to be in accordance with **4.1** to **4.4** inclusive. Ballasting systems must be secured at all times during tank surveys.

**4.5.2** A communication system is to be arranged between the survey party in the spaces under examination and the responsible officer on deck.

### 4.6 Documentation on board

**4.6.1** The following documentation is recommended to be placed on board and maintained and updated by the owner for the life of the ship in order to be readily available for the survey party.

**4.6.2** Survey Report File: This file includes Reports of Surveys and Thickness Measurement Report.

**4.6.3** Supporting Documents: It is recommended that the following additional documentation be placed on board, including any other information that will assist the inspection.

(a) Main structural plans of cargo holds and ballast tanks,

(b) Previous repair history,

(c) Cargo and ballast history,

(d) Inspection and action taken by ship's personnel with reference to:
- structural deterioration in general
- leakages in bulkheads and piping
- condition of coating or corrosion protection, if any

**4.6.4** Prior to inspection, it is recommended that the documents on board the vessel be reviewed as a basis for the current survey.

[3] Reference may also be made to IACS UR Z7.1.

# 5 Structural detail failures and repairs

## 5.1 General

**5.1.1** The ***catalogue of structural detail failures and repairs*** contained in this section of the ***Guidelines*** collates data supplied by the IACS Member Societies and is intended to provide guidance when considering similar cases of damage and failure. The proposed repairs reflect the experience of the surveyors of the Member Societies, but it is realized that other satisfactory alternative methods of repair may be available. However, in each case the repairs are to be completed to the satisfaction of the Classification Society Surveyor concerned.

## 5.2 Catalogue of structural detail failures and repairs

**5.2.1** The catalogue has been sub-divided into parts and areas to be given particular attention during the surveys:

### Part 1 Cargo hold region

Area 1 Upper deck structure
Area 2 Side structure
Area 3 Transverse bulkhead structure
Area 4 Tween deck structure
Area 5 Double bottom structure

### Part 2 Fore and aft end regions

Area 1 Fore end structure
Area 2 Aft end structure
Area 3 Stern frame, rudder arrangement and propeller shaft support

### Part 3 Machinery and accommodation spaces

Area 1 Engine room structure
Area 2 Accommodation structure

# Part 1 Cargo hold region

## Contents

**Area 1 Upper deck structure**
**Area 2 Side structure**
**Area 3 Transverse bulkhead structure**
**Area 4 Tween deck structure**
**Area 5 Double bottom structure**

# Area 1 Upper deck structure

## Contents

1 General

2 What to look for - On-deck inspection
- 2.1 Material wastage
- 2.2 Deformations
- 2.3 Fractures

3 What to look for - Under-deck inspection
- 3.1 Material wastage
- 3.2 Deformations
- 3.3 Fractures

4 General comments on repair
- 4.1 Material wastage
- 4.2 Deformations
- 4.3 Fractures
- 4.4 Miscellaneous

| Figures and/or Photographs - Area 1 | |
|---|---|
| No. | Title |
| Photograph 1 | Heavy corrosion of hatch coaming |
| Photograph 2 | Heavy corrosion of hatch coaming |
| Photograph 3 | Fractures at the hatch corner |
| Photograph 4 | Corrosion at the top of the hatch coaming |

| Examples of structural detail failures and repairs - Area 1 | |
|---|---|
| Example No. | Title |
| 1 | Buckling of deck plating of transverse framing system |
| 2 | Fractures at main cargo hatch corner |
| 3-a | Fracture of welded seam between thick plate and thin plate at cross deck |
| 3-b | Plate buckling in thin plate near thick plate at cross deck |
| 3-c | Overall buckling of cross deck plating |
| 3-d | Deformed and fractured deck plating around tug bitt |
| 4 | Buckling of web beam |
| 5-a | Fractures in the web or in the deck at the toes of the longitudinal hatch coaming termination bracket (discontinuous longitudinal hatch coaming) |
| 5-b | Fractures in continuous longitudinal hatch coaming extension bracket |
| 5-c | Fracture in access hole of longitudinal hatch coaming |
| 6 | Fractures in web of transverse hatch coaming stay |
| 7-a | Fractures in hatch coaming top plate at the termination of rail for hatch cover |
| 7-b | Fractures in hatch coaming top plate at the termination of rail for hatch cover |
| 8 | Fractures in hatch coaming top plate around resting pad |
| 9 | Fracture in deck plating at the pilot ladder access of bulwarks |

# 1 General

**1.1** Deck structures outside hatches ~~is~~ are subjected to longitudinal hull girder bending, caused by cargo distribution and wave actions. Moreover deck structures may be subjected to severe loads due to green seas on deck, excessive deck cargo or improper handling of cargo. Certain areas of the deck may also be subjected to additional compressive stresses caused by slamming or bow flare effect at the fore ship in heavy weather.

**1.2** The cross deck structure between the cargo hatches is subjected to transverse compression from the sea pressure on the ship sides and in-plane bending due to torsion distortion of the hull girders under wave action. In association with this, the area around the corner of a main cargo hatch is subjected to high cyclical stress due to the combined effect of hull girder bending moment and transverse and torsional loading.

**1.3** Discontinuous cargo hatch side coamings are subjected to considerable longitudinal bending stresses although not taken into account in the strength of hull girders. This will cause additional stresses at the mid length of hatches and stress concentrations at the termination of the side coaming extensions. Continuous cargo hatch side coamings are included in the strength of hull girders and are subjected to high longitudinal bending stress at the top of the coaming amidships. Terminations of continuous side coamings at the fore and aft ends are particularly vulnerable to stress concentrations.

**1.4** Hatch cover operations in combination with poor maintenance can result in damage to the cleats and gasket, etc. This can result in the loss of weathertight integrity of the hold spaces. Damage to the covers can also be sustained by overloading when carrying deck cargoes.

**1.5** The marine environment, the humid atmosphere due to vaporization from cargo in the cargo hold, and high temperatures on deck and hatch cover plating, from the sun and heat, may result in severe corrosion of plating and stiffeners making the structure more vulnerable to the exposures described above.

**1.6** Bulwarks are provided for the protection of crew and cargoes, and lashing of cargoes on deck. Although bulwarks are not taken into account in the strength of hull girders, they are subjected to considerable longitudinal bending stresses. Therefore bulwarks may suffer fractures and corrosion, especially at the termination of bulwarks, such as at pilot ladder access or expansion joints. The fractures may propagate to deck plating and cause serious damage.

**1.7** The deterioration of various fittings on deck, such as ventilators, air pipes and sounding pipes, may result in serious problems regarding weather/watertightness and/or firefighting.

**1.8** If the ship is assigned timber freeboards, fittings for stowage of timber deck cargo have to be inspected in accordance with ILLC 1966. Deterioration of the fittings may cause cargoes to shift resulting in serious damage to the ship.

# 2 What to look for - On-deck inspection

## 2.1 Material wastage

**2.1.1** The general condition with regard to corrosion of the deck structure, the cargo hatch coamings and the hatch covers may be observed by visual inspection. Special attention

should be paid to areas where pipes, e.g. fire main, hydraulic pipes, pipes for compressed air, are fitted close to the plating, making proper maintenance of the protective coating difficult to carry out.

**2.1.2** Grooving corrosion may occur at the transition between the thicker deck plating outside the line of cargo hatches and the thinner cross deck plating, especially when the difference in plate thickness is large. The difference in plate thickness causes water to gather in this area resulting in corrosion ambience which may subsequently lead to grooving.

**2.1.3** Pitting corrosion may occur throughout the cross deck strip plating and on hatch covers. The combination of accumulated water with scattered residue of certain cargoes may create a corrosive reaction.

**2.1.4** Wastage/corrosion may seriously affect the integrity of the steel hatch covers, and also the additional moving parts, e.g. cleats, pot-lifts, roller wheels, etc. In some ships pontoon hatch covers together with tarpaulins are used. The tarpaulins are liable to tear due to deck cargo, such as timbers, and cause heavy corrosion to the hatch covers.

## 2.2 Deformations

**2.2.1** Plate buckling (between stiffeners) may occur in areas subjected to in-plane compressive stresses, particularly if corrosion is evident. Special attention should be paid to areas where the compressive stresses are perpendicular to the direction of the stiffening system. Such areas may be in the foreship where deck longitudinals are terminated and replaced by transverse beams (See **Example 1**), but also in the cross deck strips between hatches when longitudinal stiffening is applied (See **Examples 3-b** and **3-c**).

**2.2.2** Deformed structures may be observed in areas of the deck, hatch coamings and hatch covers where cargo has been handled/loaded or mechanical equipment, e.g. hatch covers, has been operated. Also in other areas, in particular exposed deck forward, deformation may be a result ~~when~~ of green seas loads on the deck ~~have been suffered~~.

**2.2.3** Sagging plate panel may have been caused by lateral overloading as a consequence of excessive deck cargo, improper distribution /support of deck cargoes, sea water on deck in heavy weather, or a combination of these factors. It is essential that an under-deck inspection is also carried out to assess the extent of such damage (See **Example 4**).

**2.2.4** Deformed/twisted exposed structures above deck, such as side-coaming brackets, may result from impact of cargo or cargo handling machinery due to improper handling. Such damages may also be caused by sea water on deck in heavy weather.

## 2.3 Fractures

**2.3.1** Fractures in areas of structural discontinuity and stress concentration will normally be detected by close-up inspection. Special attention should be given to the structures at cargo hatches in general and to corners of deck openings in particular.

**2.3.2** Fractures initiated in the deck plating outside the line of hatches (See **Example 2**), may develop across the deck, with the most serious consequences. Also fractures initiated in the deck plating of the cross deck strip, in particular at the transition between the thicker

deck plating outside the line of cargo hatches and the thinner cross deck plating (See **Example 3-a**), may have serious consequences if not repaired immediately.

**2.3.3** Other fractures that may occur in the deck plating at hatches and in connected coamings can result/originate from:

(a) Fillet weld connection of the coaming to the deck, particularly at a ~~radiused~~ rounded hatch coaming plate at the hatch corner ~~plating~~.

(b) Welded attachment and shedder plate close to or on the free edge of the hatch corner plating.

(c) The geometry of the corners of the hatch openings.

(d) The termination of the side coaming extension brackets (See **Examples 5-a** and **5-b**).

(e) Grooving caused by wire ropes of cargo gear.

(f) Wasted plating.

(g) Attachments, cut-outs and notches for securing devices, and operating mechanisms for opening/closing hatch covers at the top of the coaming and/or coaming top bar, if any, at the mid-length of the hatch (See **Examples 7-a** and **7-b**).

(h) Hatch coaming stays supporting the hatch cover resting pads in case of deck loads on the hatch covers and the connection of resting pad to the top of the coaming as well as the supporting structures (See **Example 8**).

**2.3.4** Fractures in deck plating often occur at the termination of bulwarks, such as pilot ladder recess, due to stress concentration. The fractures may propagate ~~themselves~~ resulting in serious casualty when the deck is subject to high longitudinal bending stress.

# 3 What to look for - Under-deck inspection

## 3.1 Material wastage

**3.1.1** The level of wastage of under-deck stiffeners/structures may have to be established by means of thickness measurements. As mentioned previously the combination of the effects from the marine environment and the local atmosphere will give rise to high corrosion rates.

**3.1.2** Severe corrosion of the hatch coaming from inside and of under deck girders may occur due to difficult access for maintenance of the protective coating. This may in turn lead to fractures (See **Photograph 1**).

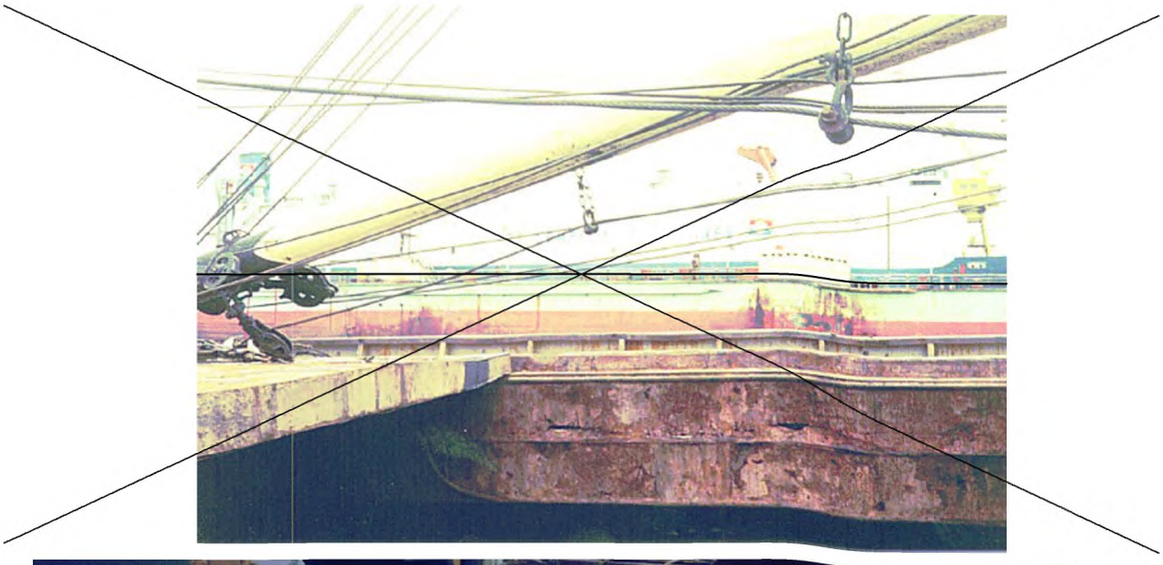



**Photograph 1 Heavy corrosion of hatch coaming**



**Photograph 2 Heavy corrosion of hatch coaming**

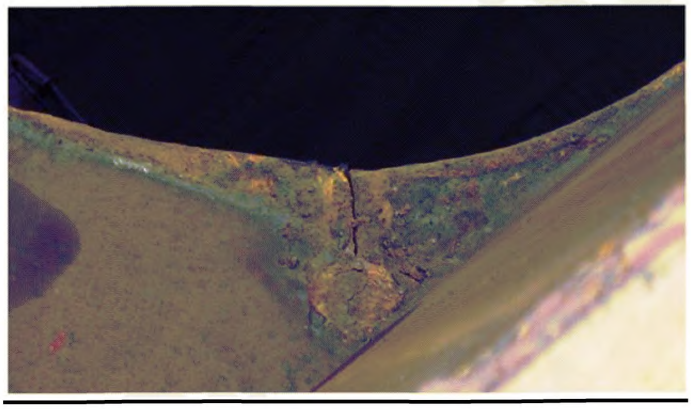

**Photograph 3 Fractures at the hatch corner**



**Photograph 4 Corrosion at the top of the hatch coaming**

## 3.2 Deformations

**3.2.1** Buckling should be looked for in the primary supporting structure, e.g. hatch end beams and longitudinal girders beneath the longitudinal hatch coamings, if sagging of deck panels has been observed during on-deck inspection. Such buckling may also be the initial observation of damage caused by lateral overloading as a consequence of excessive deck cargo, improper distribution/support of deck cargoes, sea water on deck in heavy weather, or a combination of these causes.

**3.2.2** Improper ventilation during ballasting/deballasting of deep ballast tank may cause deformation in deck structure. If such deformation is observed, internal inspection of

deep ballast tank should be carried out in order to confirm the nature and the extent of damage.

### 3.3 Fractures

**3.3.1** Fractures in the connection between the transverse bulkheads, girders/stiffeners and the deck plating may occur. This is often associated with a reduction in area of the connection due to corrosion.

**3.3.2** Fractures in the primary supporting structure, e.g. hatch end beams may be found in the weld connections at the ends of the beams/girders.

## 4 General comments on repair

### 4.1 Material wastage

**4.1.1** In the case of grooving corrosion at the transition between the thicker deck plating outside the ~~ine~~ line of cargo hatches and the cross deck plating, consideration should be given to the renewal of part of, or the entire width, of the adjacent cross deck plating.

**4.1.2** In the case of pitting corrosion throughout the cross deck strip plating, consideration should be given to renewal of part of or the entire cross deck plating.

**4.1.3** When heavy wastage is encountered on under-deck structure, the whole or part of the structure may be cropped and renewed depending on the permissible diminution levels applied by the Classification Society concerned.

**4.1.4** For wastage of cargo hatch covers a satisfactory thickness determination is to be carried out and the plating and stiffeners are to be cropped and renewed as appropriate depending on the extent of the wastage.

### 4.2 Deformations

**4.2.1** When buckling of the deck plating has occurred, although not in association with significant corrosion, appropriate reinforcement is necessary in addition to cropping and renewal.

**4.2.2** Where buckling of hatch end beams has occurred because of inadequate transverse strength, the plating should be cropped and renewed and additional panel stiffeners fitted.

**4.2.3** Buckled cross deck structure due to loss in strength induced by wastage, is to be cropped and renewed as necessary. If the cross deck is stiffened longitudinally and the buckling results from inadequate transverse strength, additional transverse stiffeners should be fitted.

**4.2.4** Deformations of cargo hatch covers should be cropped and partly renewed, or renewed in full, depending on the extent of the damage.

### 4.3 Fractures

**4.3.1** Fractures in way of cargo hatch corners should be carefully considered with respect to the design details (See **Example 2**). Re-welding of such fractures is normally not considered a permanent solution. Where the difference in thickness between an insert plate and the adjacent deck plating is greater than 3 mm the edge of the insert plate should be suitably beveled. In order to reduce the residual stress arising from this repair

situation, the welding sequence and procedure is to be carefully monitored and low hydrogen electrodes should be used for welding the insert plate to the adjoining structure. Where welded shedder plates are fitted into the corners of the hatch coamings the deck connection should be left unwelded.

**4.3.2** In the case of fractures at the transition between the thicker deck plating outside the line of cargo hatches and the cross deck plating, consideration should be given to renewal of part or the entire width of the adjacent cross deck plating, possibly with increased thickness (See **Example 3-a**).

**4.3.3** When fractures have occurred in the connection of transverse bulkheads to the cross deck structure, consideration should be given to renewing and re-welding the connecting structure beyond the damaged area with the aim of increasing the area of the connection, which may be achieved by installation of additional brackets or increasing the brackets size.

**4.3.4** Fractures of hatch end beams should be repaired by renewing the damaged structure, and by full penetration welding to the deck.

**4.3.5** To reduce the possibility of future fractures in cargo hatch coamings the following details should be observed:

(a) Cut-outs and other discontinuities at the top of coamings and/or coaming top bar should have rounded corners (preferably elliptical or circular in shape) (See **Example 7-b**).
Any local reinforcement should be given a tapered transition in the longitudinal direction and the rate of taper should not exceed 1 in 3 (See **Example 7-a**).

(b) Fractures, which occur in the fillet weld connections to the deck of ~~radiused~~ rounded coaming plates at the corners, should be repaired by replacing existing fillet welds with full penetration welding using low hydrogen electrodes or equivalent. If the fractures are extensive and recurring, the coamings should be ~~redesigned~~ modified to form square corners, with the longitudinal side coamings extending in the form of tapered brackets. Continuation brackets also to be arranged transversely in line with the hatch end coamings and the under-deck transverse.

(c) Cut-outs and drain holes are to be avoided in the hatch side coaming extension brackets. For fractured brackets, see **Examples 5-a** and **5-b**.

**4.3.6** For cargo hatch covers, fractures of a minor nature may be veed-out and welded. For more extensive fractures, the structure should be cropped and partly renewed.

**4.3.7** For fractures ~~(and heavy corrosion)~~ at the end of bulwarks an attempt should be made to modify the design in order to reduce the stress concentration in connection with general cropping and renewal (See **Example 9**).

## 4.4 Miscellaneous

**4.4.1** Ancillary equipment such as cleats, rollers etc. on cargo hatch covers is to be renewed when damaged or corroded.

| GENERAL DRY CARGO SHIPS | Guidelines for Surveys, Assessment and Repair of Hull Structure | |
|---|---|---|
| Part 1 | Cargo hold region | Example No. |
| Area 1 | Upper deck structure | 1 |
| Detail of damage | Buckling of deck plating of transverse framing system | |

**Sketch of damage**

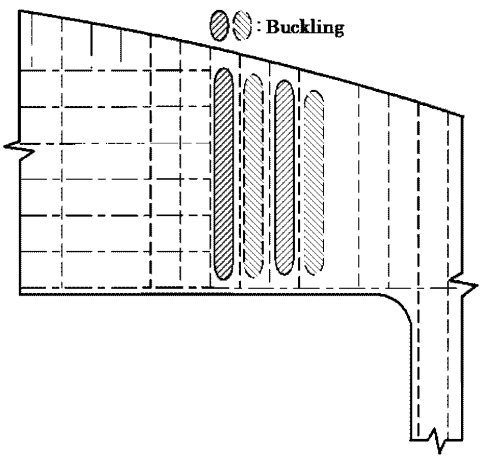


**Sketch of repair**

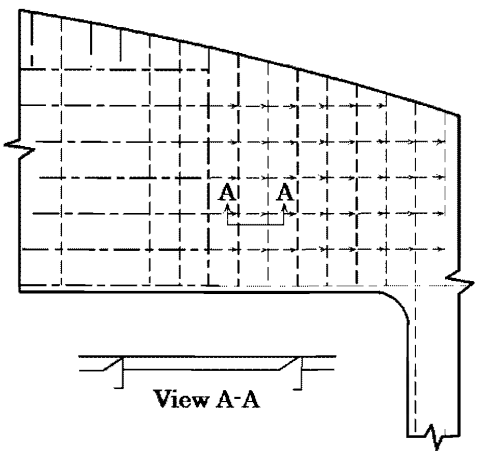


**Notes on possible cause of damage**

1. Excessive compressive stress due to slamming or bow flare effect.
2. Insufficient longitudinal stiffening of deck plating.

**Notes on repairs**

1. Buckled plating should be cropped and renewed. Longitudinal internal stiffeners should be provided.
   (Instead of longitudinal stiffeners, renewal by thicker deck plating can be accepted.)
2. Stress concentration may occur at the end of sniped stiffener resulting in fatigue fracture. For locations where high cyclic stress may occur, appropriate connection such as lug-connection should be considered.

| GENERAL DRY CARGO SHIPS | Guidelines for Surveys, Assessment and Repair of Hull Structure | |
|---|---|---|
| Part 1 | Cargo hold region | Example No. |
| Area 1 | Upper deck structure | 2 |
| Detail of damage | Fractures at main cargo hatch corner | |

**Sketch of damage**

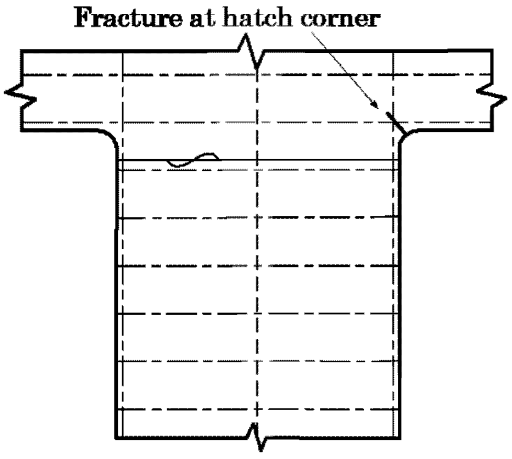


**Sketch of repair**

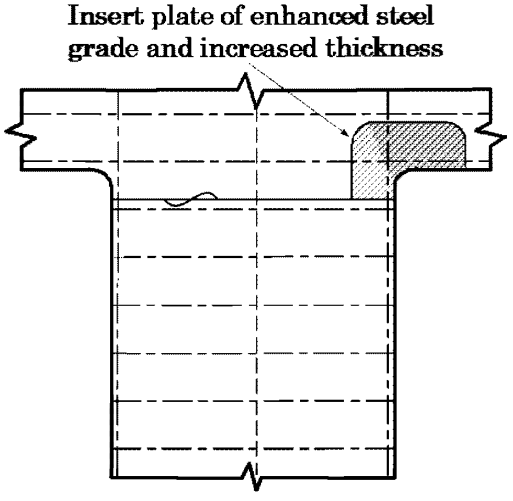


**Notes on possible cause of damage**

1. Stress concentration at hatch corners, i.e. radius of corner.
2. Welded attachment of shedder plate close to edge of hatch corner.
3. Wire rope groove.

**Notes on repairs**

1. The corner plating in way of the fracture is to be cropped and renewed. If stress concentration is primary cause, insert plate should be of increased thickness, enhanced steel grade and/or improved geometry.
   Insert plate should be continued beyond the longitudinal and transverse extent of the hatch corner radius ellipse or parabola, and the butt welds to the adjacent deck plating should be located well clear of the butts in the hatch coaming.
   It is recommended that the edges of the insert plate and the butt welds connecting the insert plates to the surrounding deck plating be made smooth by grinding. In this respect caution should be taken to ensure that the micro grooves of the grinding are parallel to the plate edge.
2. If the cause of fracture is welded attachment of shedder plate, the deck connection should be left unwelded.
3. If the cause of the fracture is wire rope groove, replacement to the original design can be accepted.

| GENERAL DRY CARGO SHIPS | Guidelines for Surveys, Assessment and Repair of Hull Structure | |
|---|---|---|
| **Part 1** | **Cargo hold region** | **Example No.** |
| **Area 1** | **Upper deck structure** | **3-a** |
| **Detail of damage** | Fracture of welded seam between thick plate and thin plate at cross deck | |

**Sketch of damage**

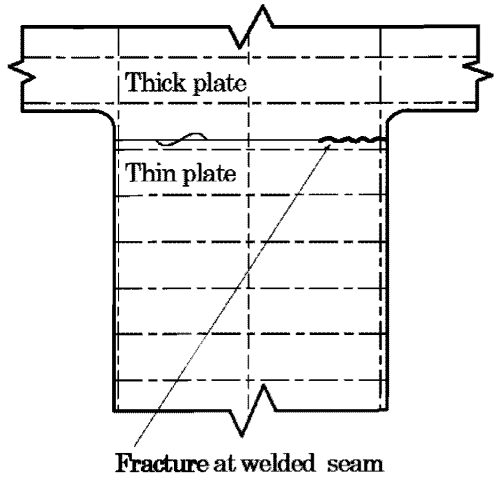


**Sketch of repair**

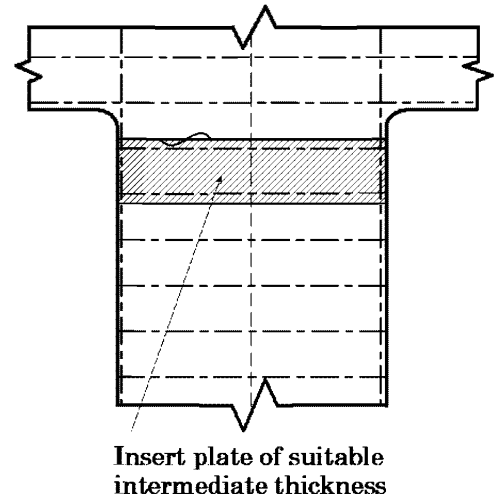


**Notes on possible cause of damage**

1. Stress concentration created by abrupt change in deck plating thickness.
2. In-plane bending in cross deck strip due to torsional (longitudinal) movements of ship sides.
3. Welded seam not clear of tangent point of hatch corner.

**Notes on repairs**

1. Insert plate of intermediate thickness is recommended.
2. Smooth transition between plates (beveling) should be considered.

| GENERAL DRY CARGO SHIPS | Guidelines for Surveys, Assessment and Repair of Hull Structure | |
|---|---|---|
| Part 1 | Cargo hold region | Example No. |
| Area 1 | Upper deck structure | 3-b |
| Detail of damage | Plate buckling in thin plate near thick plate at cross deck | |

**Sketch of damage**

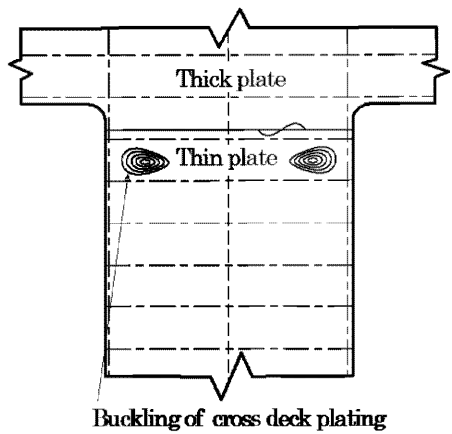


**Sketch of repair**

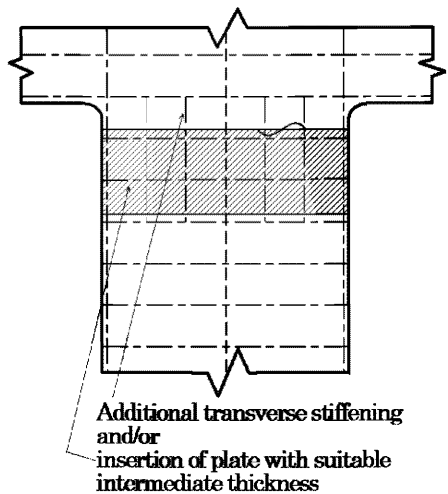


**Notes on possible cause of damage**

1. In-plane bending of cross deck strip due to torsional (longitudinal) movement of ship sides, often in combination with corrosion.
2. Insufficient transverse stiffening.

**Notes on repairs**

1. Transverse stiffeners extending from hatch sides towards centerline at least 10% of breadth of hatch, and/or increased plate thickness in the same area.

| GENERAL DRY CARGO SHIPS | Guidelines for Surveys, Assessment and Repair of Hull Structure | |
|---|---|---|
| Part 1 | Cargo hold region | Example No. |
| Area 1 | Upper deck structure | 3-c |
| Detail of damage | Overall buckling of cross deck plating | |

**Sketch of damage**

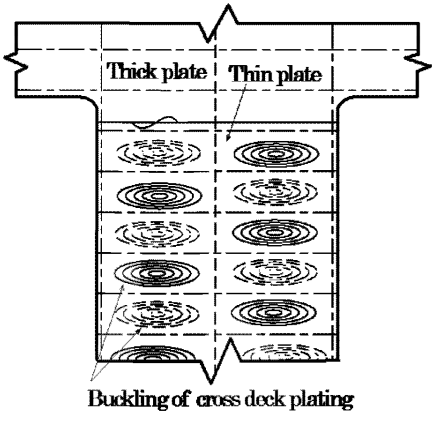


**Sketch of repair**

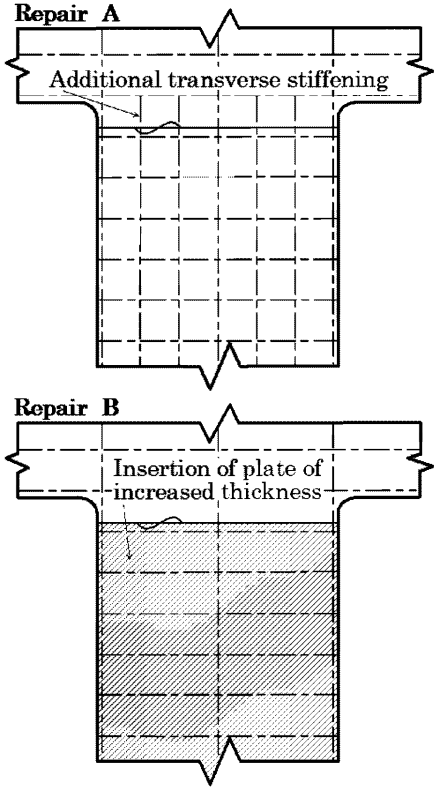


**Notes on possible cause of damage**

1. Transverse compression of deck due to sea load.
2. Insufficient transverse stiffening.

**Notes on repairs**

1. **Repair A**
   Plating of original thickness in combination with additional transverse stiffening.
   **Repair B**
2. Insertion of plating of increased thickness.

| GENERAL DRY CARGO SHIPS | Guidelines for Surveys, Assessment and Repair of Hull Structure | |
|---|---|---|
| Part 1 | Cargo hold region | Example No. |
| Area 1 | Upper deck structure | 3-d |
| Detail of damage | Deformed and fractured deck plating around tug bitt | |

**Sketch of damage**

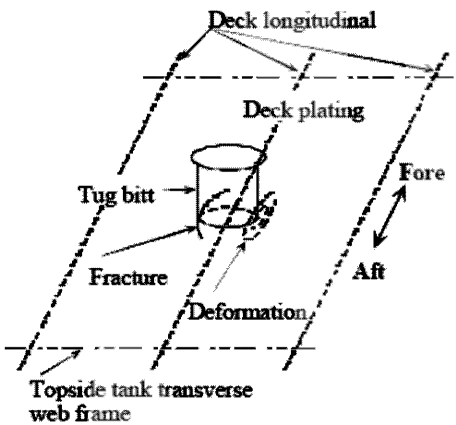


**Sketch of repair**

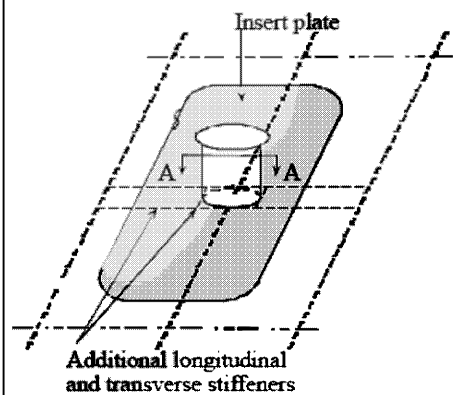


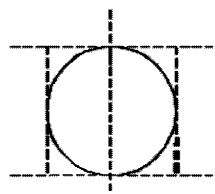


**Notes on possible cause of damage**

1. Insufficient strength.

**Notes on repairs**

1. Fractured/deformed deck plating should be cropped and part renewed.
2. Reinforcement by stiffeners should be considered.

| GENERAL DRY CARGO SHIPS | Guidelines for Surveys, Assessment and Repair of Hull Structure | |
|---|---|---|
| Part 1 | Cargo hold region | Example No. |
| Area 1 | Upper deck structure | 4 |
| Detail of damage | Buckling of web beam | |

**Sketch of damage**

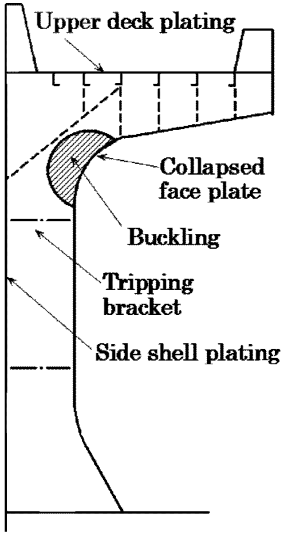


**Sketch of repair**

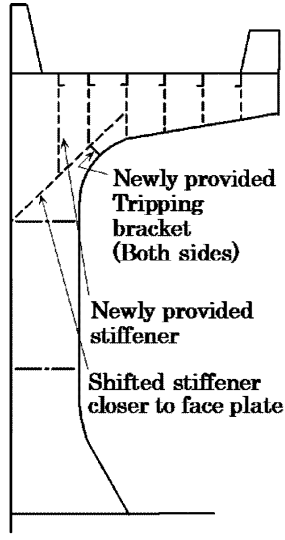


**Notes on possible cause of damage**

1. Overloading by green sea on deck or by excessive deck cargo.
2. Excessive corrosion.
3. Insufficient/improper web stiffening.

**Notes on repairs**

1. Buckled part is to be cropped and renewed.
2. If corrosion is not the cause, renewal by thicker plate (web and/or face) and/or reinforcement by stiffener and tripping bracket should be considered.

| GENERAL DRY CARGO SHIPS | Guidelines for Surveys, Assessment and Repair of Hull Structure | |
|---|---|---|
| Part 1 | Cargo hold region | Example No. |
| Area 1 | Upper deck structure | 5-a |
| Detail of damage | Fractures in the web or in the deck at the toes of the longitudinal hatch coaming termination bracket (discontinuous longitudinal hatch coaming) | |

**Sketch of damage**

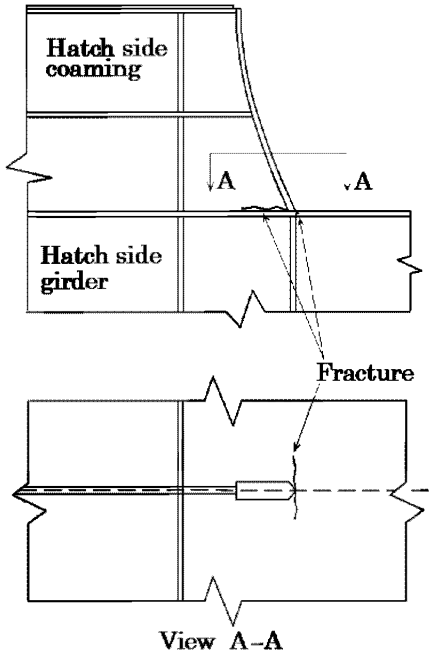


**Sketch of repair**

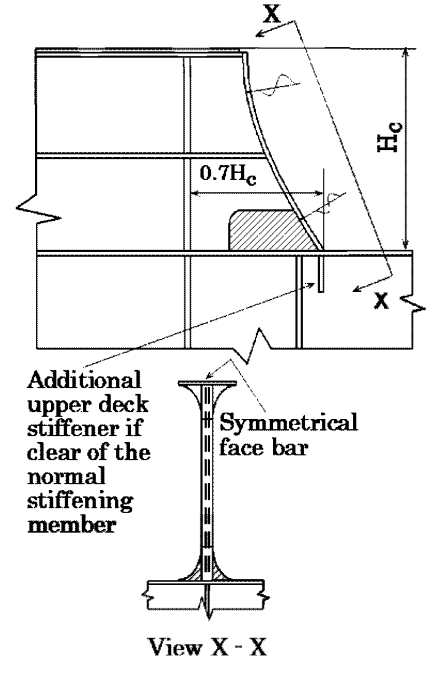


**Notes on possible cause of damage**

1. This damage is caused by stress concentrations attributed to the design of the bracket.

**Notes on repairs**

1. The design of the bracket can be altered as shown above, however, it is to be ensured that an additional under deck stiffener is provided at the toe of the termination bracket, where the toe is clear of the normal stiffening member.
   Full penetration weld for a distance of 0.15 $H_C$
2. from toe of side coaming termination bracket and for connection of athwartship gusset bracket to deck.
   The fracture in deck plating to be veed-out and
3. rewelded or deck plating cropped and part renewed as appropriate, using low hydrogen electrodes for welding.

| GENERAL DRY CARGO SHIPS | Guidelines for Surveys, Assessment and Repair of Hull Structure | |
|---|---|---|
| **Part 1** | **Cargo hold region** | **Example No.** |
| **Area 1** | **Upper deck structure** | **5-b** |
| **Detail of damage** | Fractures in continuous longitudinal hatch coaming extension bracket | |

**Sketch of damage**

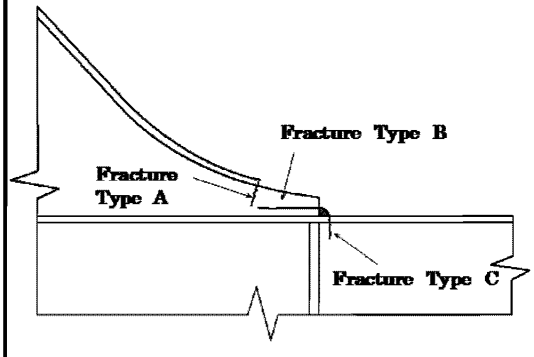


**Sketch of repair**

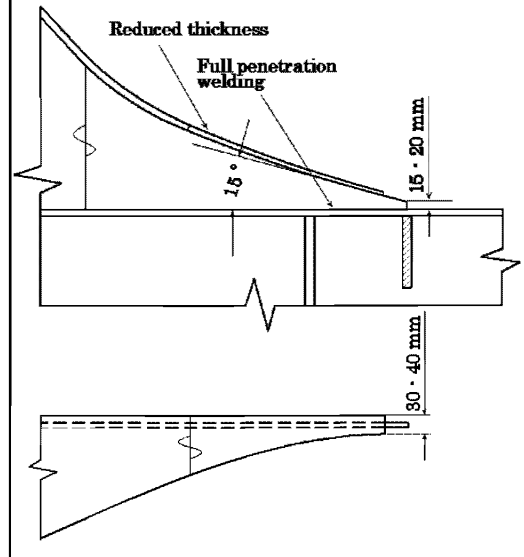


**Notes on possible cause of damage**

1. Flange force at the end of the flange too high due to insufficient tapering (**Fracture Type A**, propagating in the web).
2. Shear force in the web plate too high due to insufficient reduction of the web height at the end (**Fracture Type B**, propagating in the web at the undercut or HAZ of the fillet weld).
3. Insufficient support of the extension bracket below the deck (**Fracture Type C**, starting from undercut or HAZ of the fillet weld and propagating in the deck plating).

**Notes on repairs**

1. Extend the extension bracket as long as possible to arrange a gradual transition.
2. Reduce the web height at the end of the bracket; in case of high stress areas grind smooth the transition to the deck plating welding.
3. Reduce the cross sectional area of the flange at the end as far as possible.
4. Provide longitudinal structure in way of the web of the extension bracket to the next transverse structure or provide a new transverse structure.

| GENERAL DRY CARGO SHIPS | Guidelines for Surveys, Assessment and Repair of Hull Structure | |
|---|---|---|
| Part 1 | Cargo hold region | Example No. |
| Area 1 | Upper deck structure | 5-c |
| Detail of damage | Fracture in access hole of longitudinal hatch coaming | |

**Sketch of damage**

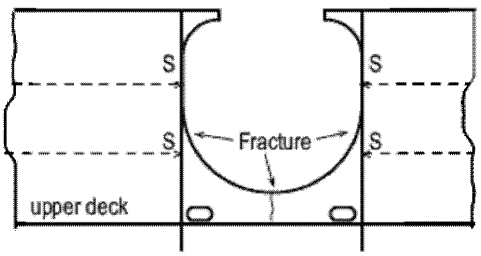


Sketch No. 1 a

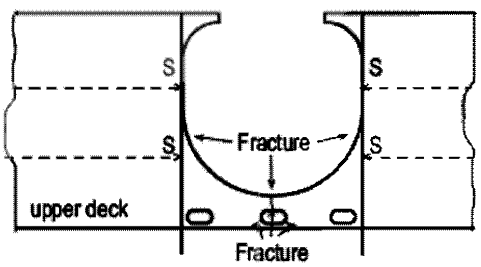


Sketch No. 1 b

**Sketch of repair**

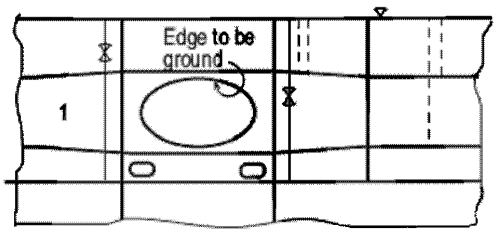


**Notes on possible cause of damage**

1. Coincidence of maximum increased stress due to the reduction of the hatch coaming with the metallurgical notches due to the welding seams in web and flat bar located at the same position. Insufficient transverse stiffening.

**Notes on repairs**

1. Hatch coaming to be continuous.
2. Access opening to be provided.
3. Drain holes to be elliptical and located above fillet weld to deck.
4. Hatch coaming stiffeners of same material as coaming.

| GENERAL DRY CARGO SHIPS | Guidelines for Surveys, Assessment and Repair of Hull Structure | |
|---|---|---|
| Part 1 | Cargo hold region | Example No. |
| Area 1 | Upper deck structure | 6 |
| Detail of damage | Fractures in web of transverse hatch coaming stay | |

**Sketch of damage**

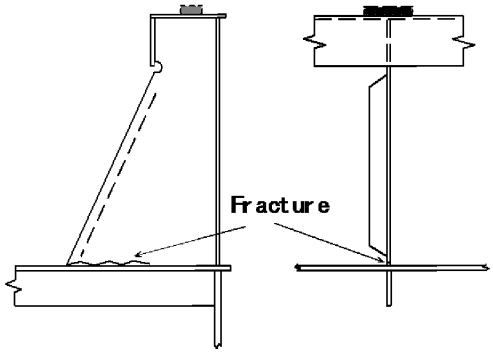


**Sketch of repair**

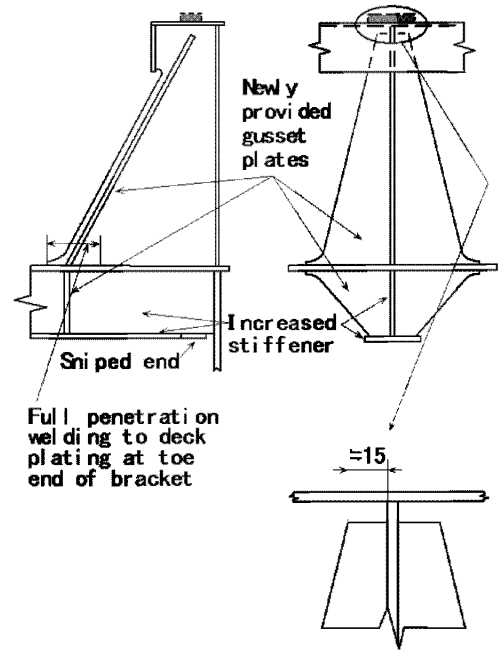


**Notes on possible cause of damage**

1. Insufficient consideration of the horizontal friction forces in way of the resting pads for hatch cover.

**Notes on repairs**

1. Modification of the design of the hatch coaming stay.
2. Full penetration welding between gusset plates and deck plating.
3. Strengthening and continuation of the structure below the deck.
4. Use pads with smaller coefficient of friction.

| GENERAL DRY CARGO SHIPS | Guidelines for Surveys, Assessment and Repair of Hull Structure | |
|---|---|---|
| Part 1 | Cargo hold region | Example No. |
| Area 1 | Upper deck structure | 7-a |
| Detail of damage | Fractures in hatch coaming top plate at the termination of rail for hatch cover | |

**Sketch of damage**

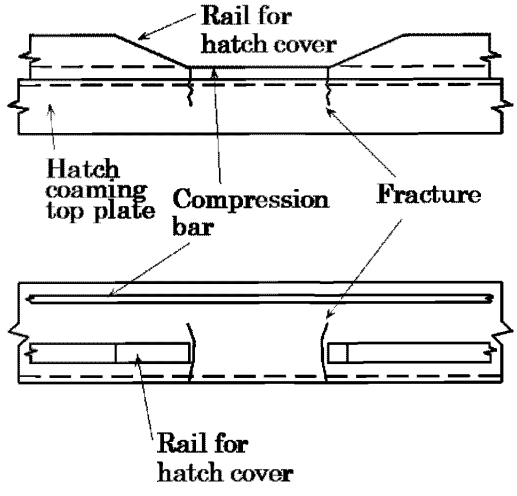


**Sketch of repair**

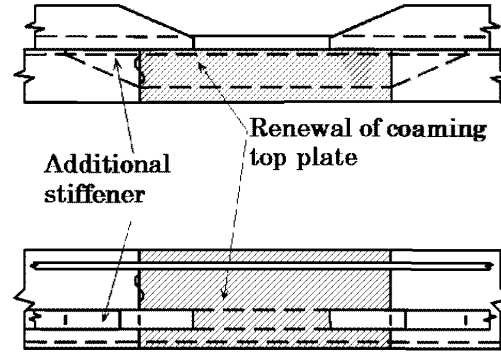


**Notes on possible cause of damage**

1. Stress concentration at the termination of the rail for hatch cover.

**Notes on repairs**

1. Fractured plate is to be cropped and part renewed.
2. Thicker insert plate and/or reinforcement by additional stiffener under the top plate should be considered. Also refer to **Example 7-b**.

| GENERAL DRY CARGO SHIPS | Guidelines for Surveys, Assessment and Repair of Hull Structure | |
|---|---|---|
| Part 1 | Cargo hold region | Example No. |
| Area 1 | Upper deck structure | 7-b |
| Detail of damage | Fractures in hatch coaming top plate at the termination of rail for hatch cover | |

**Sketch of damage**

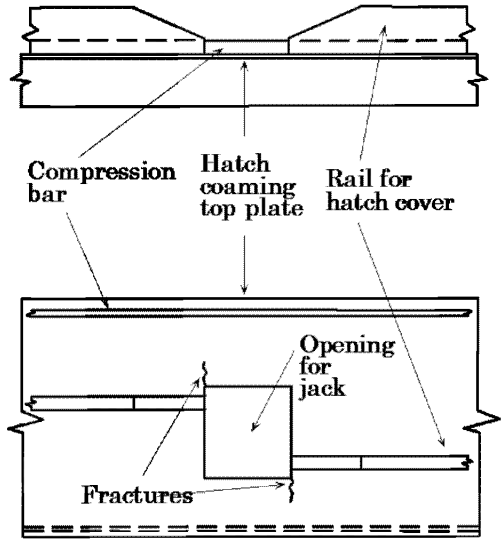


**Sketch of repair**

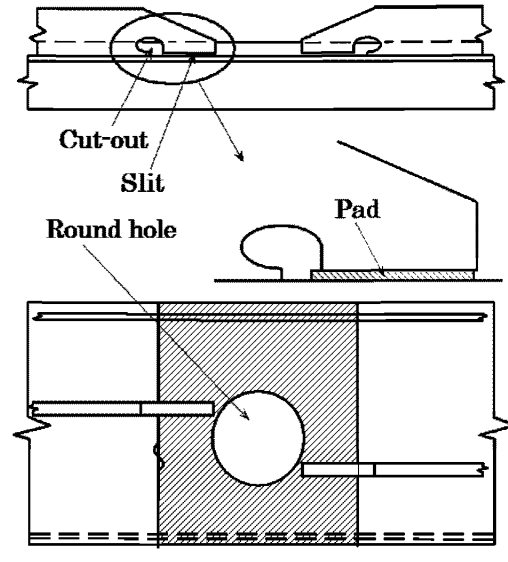


**Notes on possible cause of damage**

1. Stress concentration at the termination of the rail for hatch cover.

**Notes on repairs**

1. Fractured plate is to be cropped and part renewed.
2. Thicker insert plate and/or reduction of stress concentration adopting large radius should be considered.
   Or cut-out in the rail and detachment of the welds as shown in the above drawing should be considered in order to reduce the stress of the corner of the opening.

| GENERAL DRY CARGO SHIPS | Guidelines for Surveys, Assessment and Repair of Hull Structure | |
|---|---|---|
| Part 1 | Cargo hold region | Example No. |
| Area 1 | Upper deck structure | 8 |
| Detail of damage | Fractures in hatch coaming top plate around resting pad | |

**Sketch of damage**

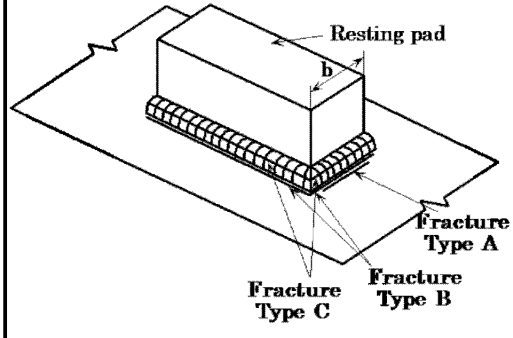


**Fracture Type A**:
Starting in way of the undercut or HAZ of the transverse fillet weld and propagating in the top plating.

**Fracture Type B**:
Starting in way of the undercut or HAZ of the longitudinal fillet weld and propagating in the top plating.

**Fracture Type C**:
Starting and propagating in fillet weld

**Sketch of repair**

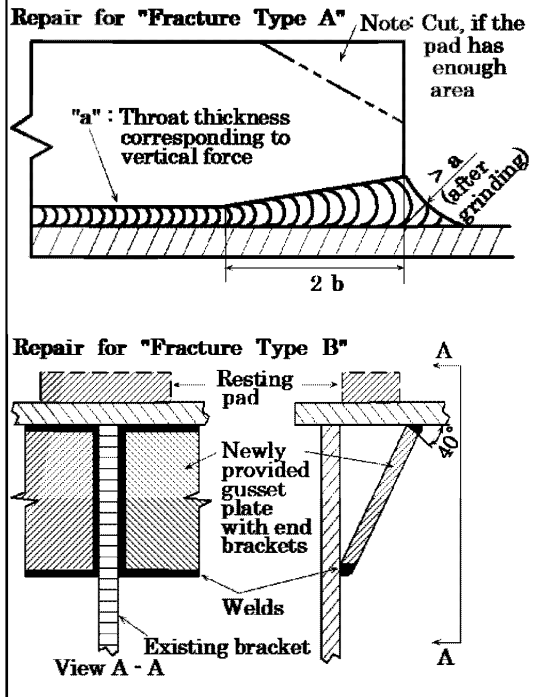


**Notes on possible cause of damage**

1. **Fracture Type A**:
   Inappropriate transition from the hatch coaming top plating to the resting pad in respect to longitudinal stresses.
2. **Fracture Type B**:
   Insufficient support of the resting pad below the top plating.
3. **Fracture Type C**:
   Insufficient throat thickness of the fillet weld in relation to the vertical forces.

**Notes on repairs**

1. **Fracture Type A**:
   Modification of the transverse fillet weld according to the sketch; in some cases smoothing of the transition by grinding is acceptable.
2. **Fracture Type B**:
   Strengthening of the structures below the top plating according to the sketch.
3. **Fracture Type C**:
   Increasing the throat thickness corresponding to the acting vertical forces.

| GENERAL DRY CARGO SHIPS | Guidelines for Surveys, Assessment and Repair of Hull Structure | |
|---|---|---|
| Part 1 | Cargo hold region | Example No. |
| Area 1 | Upper deck structure | 9 |
| Detail of damage | Fracture in deck plating at the pilot ladder access of bulwarks | |

**Sketch of damage**

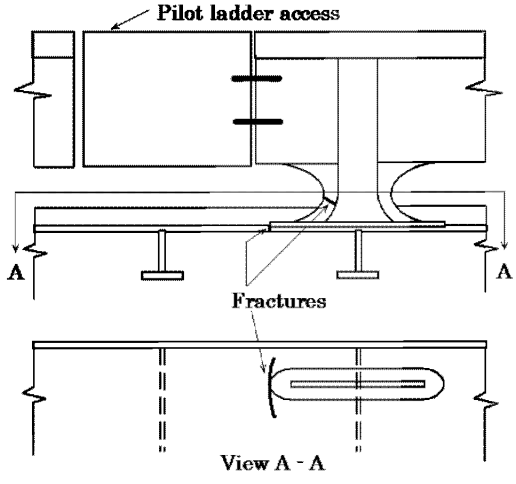


**Sketch of repair**

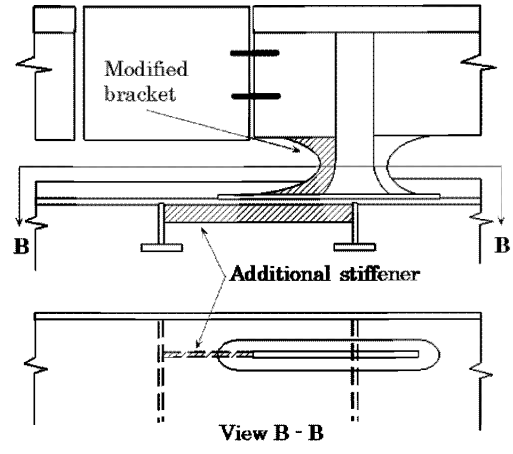


**Notes on possible cause of damage**

1. Stress concentration at the termination of bulwarks.

**Notes on repairs**

1. Fractured deck plating should be cropped and part renewed.
2. Reduction of stress concentration should be considered. In the above figure gusset plate was replaced with soft type for the fracture in gusset plate and pad plate was increased. Additional stiffeners were provided for the fracture in deck plating.

# Area 2 Side structure

## Contents

1 General

2 What to look for - Internal inspection
- 2.1 Material wastage
- 2.2 Deformations
- 2.3 Fractures

3 What to look for - External inspection
- 3.1 Material wastage
- 3.2 Deformations
- 3.3 Fractures

4 General comments on repair
- 4.1 Material wastage
- 4.2 Deformations
- 4.3 Fractures

| Figures and/or Photographs - Area 2 | |
|---|---|
| No. | Title |
| Figure 1 | Potential problem areas |
| Photograph 1 | Leakage from side shell plating due to heavy corrosion |
| Photograph 2 | Timber carrier ~~carriers~~ listing due to ingress of water |

| Examples of structural detail failures and repairs - Area 2 | |
|---|---|
| Example No. | Title |
| 1 | Fracture in side shell frame at lower bracket |
| 2 | Fractures in side shell frame/lower bracket and side shell plating near tank top |
| 3 | Adverse effect of corrosion on the frame of forward/afterward hold |
| 4 | Fractures at the supporting brackets in way of collision bulkhead~~,~~ (with no side shell panting stringers fitted in hold) |
| 5 | Fractures in way of continuation/extension brackets in aftermost hold at the engine room bulkhead |
| 6 | Fracture in way of continuation/extension brackets at the end of deep ~~cargo~~ tank |

# 1 General

**1.1** The shear capacity is the main contribution of the side shell to the general structural strength of the ship's hull. Shear stresses arise as a consequence of local unbalance longitudinally between the vertical forces of cargo loads and steel-weight, and the up-thrust of buoyancy.

**1.2** In addition to the contribution to the general structural strength of the ship's hull, the side shell is the defense against ingress/leakage of sea water, when subjected to static sea pressure and dynamic effects of ship movement and wave actions in heavy weather.

**1.3** The ship side may suffer damage due to contact with the quay during berthing and impacts from cargo and/or equipment during cargo handling.

**1.4** The marine environment (such as ultraviolet rays, high temperature, alternate wet and dry conditions due to wave or change of loading conditions etc.) in association with the characteristics of certain cargoes (e.g. wet timber loaded from sea water) may result in deterioration of coating and severe corrosion of plating and stiffeners. This situation makes the structure more vulnerable to the exposures described above.

**1.5** The transition regions are subject to stress concentrations due to structural discontinuities. The side shell plating in fore and aft transition regions is also subject to panting. The lack of continuity of the longitudinal structure, and the greater slenderness and flexibility of the side structure near the more rigid end structures, can result in damages.

**1.6** A summary of potential problem areas is shown in **Figures 1 (a)** and **(b)**. Serious consequences of damaged ship sides are illustrated in **Photographs 1** and **2**.

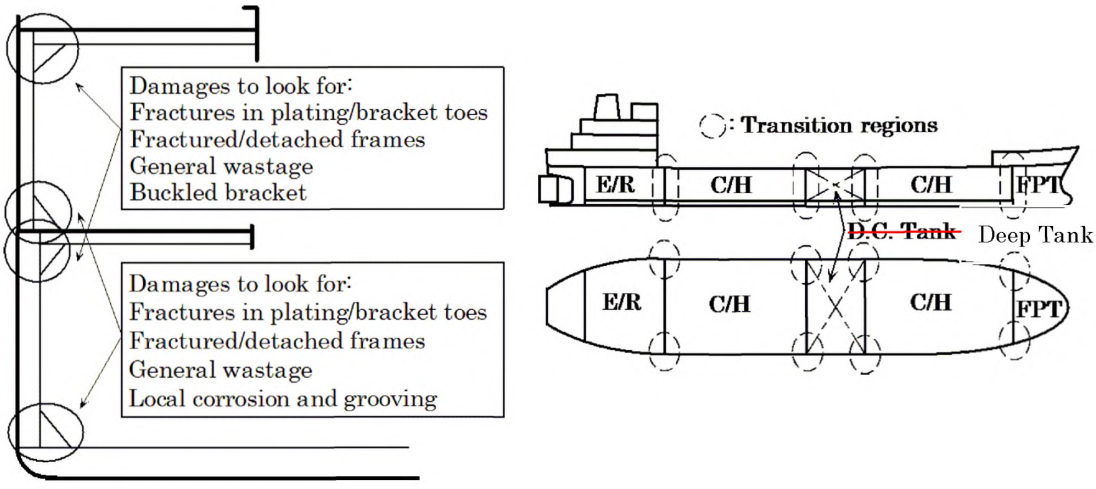


**(a) Side shell frames** **(b) Transition regions**

**Figure 1 Potential problem ~~problems~~ areas**

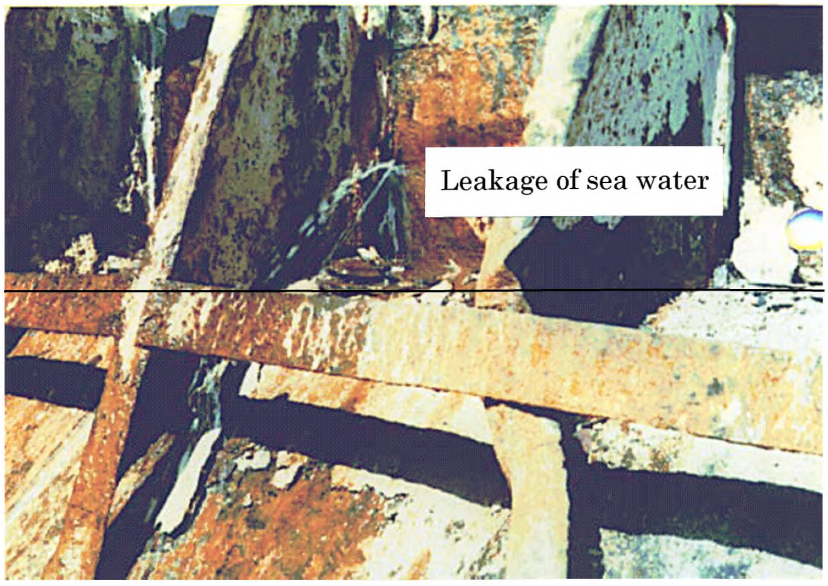



**Photograph 1 Leakage from side shell plating due to heavy corrosion**



**Photograph 2 Timber carrier listing due to ingress of water**

# 2 What to look for - Internal inspection

## 2.1 Material wastage

**2.1.1** Attention is drawn to the fact that the tween deck and side shell frames may be significantly weakened by loss of thickness although diminution and deformations may not be apparent. Inspection should be made after the removal of any scale or rust deposit and thickness measurement gauging may be necessary, particularly if the corrosion is smooth and uniform.

**2.1.2** It is not unusual to find highly localised corrosion on uncoated side shell frames and their end connections. The loss in the thickness is normally greater close to the side shell plating rather than near the faceplate (See **Example 2**). This situation, if not remedied, can result in loss of support to the shell plating and hence large inboard deflections. In many cases such deflections of the side shell plating can generate fractures in the shell plating and fracturing and buckling of the frame web plates and eventually result in detachment of the end brackets from the tank top.

**2.1.3** Heavy wastage and possible grooving of the framing in forward/ aft hold, where side shell plating is oblique to the frames it may have a more severe effect as shown in **Example 3**.

## 2.2 Deformations

**2.2.1** It is normally to be expected that the lower region of the frames will receive some level of damage during operational procedures, e.g. unloading with grabs or loading of logs. This can range from damage of the frame end bracket face plates to large physical deformations of a number of frames and in some cases can initiate fractures.

These individual frames and frame brackets, if rendered ineffective, will place additional load on the adjacent frames and failure by the "domino effect" can in many cases extend over the side shell of a complete hold.

## 2.3 Fractures

**2.3.1** Fractures are more evident at the toes of the upper and lower bracket(s) or at the connections between brackets and frames. In most cases the fractures may be attributed to stress concentrations and stress variations created, in the main, by loads from the seaway. The stress concentrations can be a result of poor detail design and/or bad workmanship. Localised fatigue fracturing, possibly in association with localised corrosion, may be difficult to detect and it is stressed that the areas in question should receive close attention during periodical surveys.

**2.3.2** Fractures in shell plating and supporting or continuation/extension brackets at collision bulkheads, deep tank bulkheads, and engine room bulkheads are frequently found by close-up inspection.

# 3 What to look for - External inspection

## 3.1 Material wastage

**3.1.1** The general condition with regard to wastage of the ship's sides may be observed by visual inspection from the quayside of the area above the waterline. Special attention

should be paid to areas where the painting has deteriorated.

## 3.2 Deformations

**3.2.1** The side shell should be carefully inspected with respect to possible deformations. The side shell below water line can usually only be inspected when the ship is dry docked. Therefore special attention with respect to possible deformations should be made during dry-docking taking into account the period until the next dry-docking. When deformation of the shell plating is found, the area should also be inspected internally since even a small deformation may indicate serious damage to the internal structure.

## 3.3 Fractures

**3.3.1** Fractures in the shell plating in way of ballast tanks may be detected above the water line and below the water line during dry-docking in a wet area in contrast to otherwise dry shell plating.

# 4 General comments on repair

## 4.1 Material wastage

**4.1.1** In general, where part of the hold framing and/or associated end brackets has corroded to the permissible minimum thickness at the time of inspection (judged to have insufficient corrosion margin until next major survey), then the normal practice is to crop and renew the area affected. If the remaining section of the frames/brackets marginally remain within the allowable limit, surveyors should request that affected frames and associated end brackets be renewed. Alignment of end brackets with the structure inside the double bottom or the opposite side of tween deck is to be ensured. It is recommended that repaired areas be coated.

## 4.2 Deformations

**4.2.1** The structure should be restored to its original shape and position either by fairing in place or by cropping and renewing the affected structure, based on the depth and extent of the deformations.

## 4.3 Fractures

**4.3.1** All fractures in side shell frames or their end brackets are to be repaired.

**4.3.2** Fractured parts of supporting brackets and continuation/extension brackets at collision bulkhead, deep tank bulkheads, and engine room bulkhead are to be part renewed. Modification of shape and possible extension of the brackets should be considered. Affected shell plating in way of the damaged brackets should be cropped and renewed.

| GENERAL DRY CARGO SHIPS | Guidelines for Surveys, Assessment and Repair of Hull Structure | |
|---|---|---|
| **Part 1** | **Cargo hold region** | **Example No.** |
| **Area 2** | **Side structure** | **1** |
| **Detail of damage** | Fracture in side shell frame at lower bracket | |

**Sketch of damage**

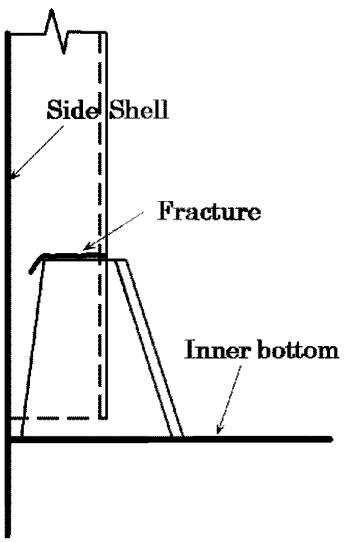


**Sketch of repair**

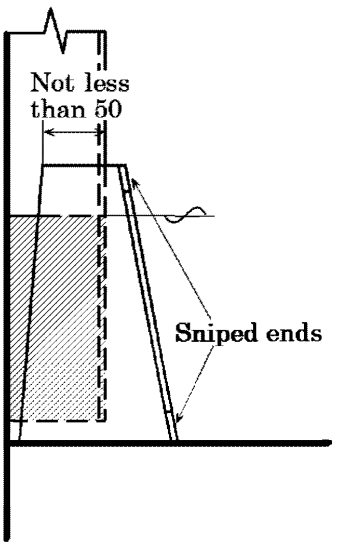


**Notes on possible cause of damage**

1. This type of damage is caused due to stress concentration.

**Notes on repairs**

1. For small fractures, e. g. hairline fractures, the fracture can be veed-out, welded up, ground, examined by NDT for fractures, and rewelded. For larger/significant fractures consideration is
2. to be given to cropping and partly renewing/ renewing the frame brackets. If renewing the brackets, end of frames can be sniped to soften them.
   If felt prudent, soft toes are to be incorporated
3. at the boundaries of the bracket to the inner bottom plating.

| GENERAL DRY CARGO SHIPS | Guidelines for Surveys, Assessment and Repair of Hull Structure | |
|---|---|---|
| Part 1 | Cargo hold region | Example No. |
| Area 2 | Side structure | 2 |
| Detail of damage | Fractures in side shell frame/lower bracket and side shell plating near tank top | |

**Sketch of damage**

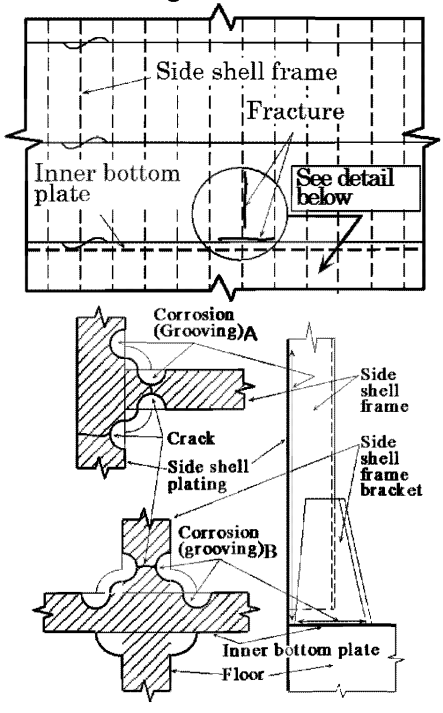


**Sketch of repair**

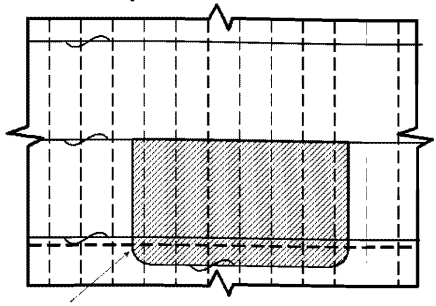


**Notes on possible cause of damage**

1. Fracture in side shell plating along side shell frame: Heavy corrosion (grooving) along side shell frame (See A).
2. Fracture in side shell plating along tank top: Heavy corrosion (grooving) along tank top (See B) resulting detachment of side shell frame bracket from inner bottom plating.

**Notes on repairs**

1. Sketch of repair applies when damage extends over several frames.
2. Isolated fractures may be repaired by veeing-out and rewelding.
3. Isolated cases of grooving may be repaired by build up of welding.

| GENERAL DRY CARGO SHIPS | Guidelines for Surveys, Assessment and Repair of Hull Structure | |
|---|---|---|
| Part 1 | Cargo hold region | Example No. |
| Area 2 | Side structure | 3 |
| Detail of damage | Adverse effect of corrosion on the frame of forward/afterward hold | |

**Sketch of damage**

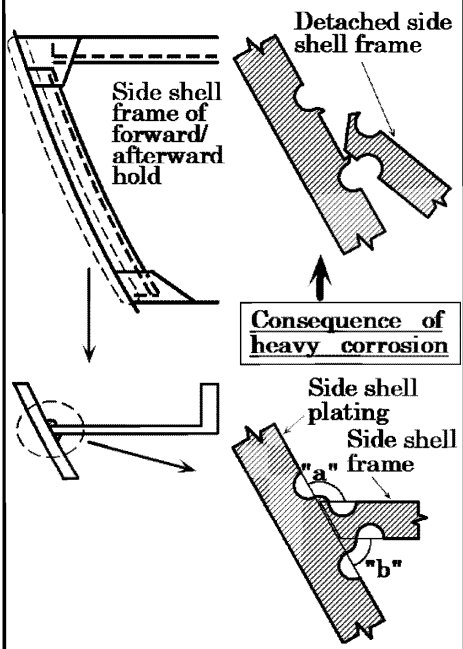


**Sketch of repair**

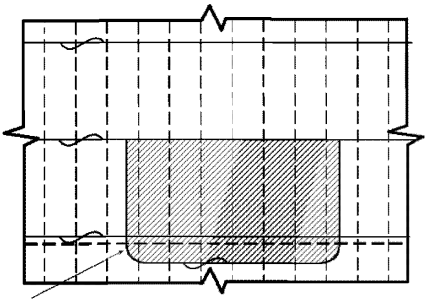

1. Part renewal including side shell frames and inner bottom plating, as found necessary
2. Deep penetration welding at the connections of side shell frames to side shell plating

**Notes on possible cause of damage**

1. Heavy corrosion (grooving) of side shell frame along side shell plating and difference of throat thickness "**a**" from "**b**".
   (Since original throat thickness of "**a**" is usually smaller than that of "**b**", if same welding procedure is applied, the same corrosion has a more severe effect on "**a**", and may cause collapse and/or detachment of side shell frame.)

**Notes on repairs**

1. Sketch of repair applies when damage extends over several frames.
2. Isolated fractures may be repaired by veeing-out and rewelding.
3. Isolated cases of grooving may be repaired by build up of welding.

| GENERAL DRY CARGO SHIPS | Guidelines for Surveys, Assessment and Repair of Hull Structure | |
|---|---|---|
| Part 1 | Cargo hold region | Example No. |
| Area 2 | Side structure | 4 |
| Detail of damage | Fractures at the supporting brackets in way of ~~the~~ collision bulkhead~~,~~ (with no side shell panting stringers fitted in hold) | |

**Sketch of damage**

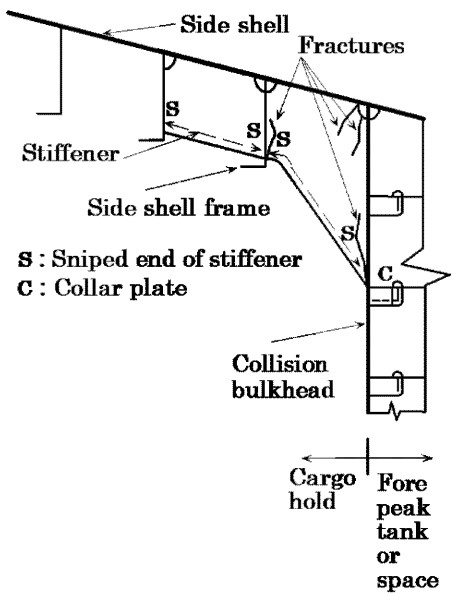


**Sketch of repair**

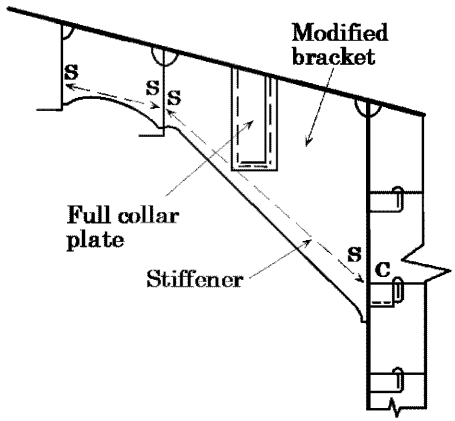


**Notes on possible cause of damage**

1. Insufficient bracket size resulting in high stress due to load cantilevered from side frame.
2. Stress concentration at toe of bracket and misalignment between bracket and stringer in fore peak tank or space.

**Notes on repairs**

1. The extended bracket arm connection to the collision bulkhead is to have a soft toe, and any cut-outs for stiffeners in the fore peak tank or space are to be collared when situated in the vicinity of the bracket toe. When fractures have extended into the side
2. shell or bulkhead plating, the plating is to be cropped and part renewed.

| GENERAL DRY CARGO SHIPS | Guidelines for Surveys, Assessment and Repair of Hull Structure | |
|---|---|---|
| Part 1 | Cargo hold region | Example No. |
| Area 2 | Side structure | 5 |
| Detail of damage | Fractures in way of continuation /extension brackets in aftermost hold at the engine room bulkhead | |

**Sketch of damage**

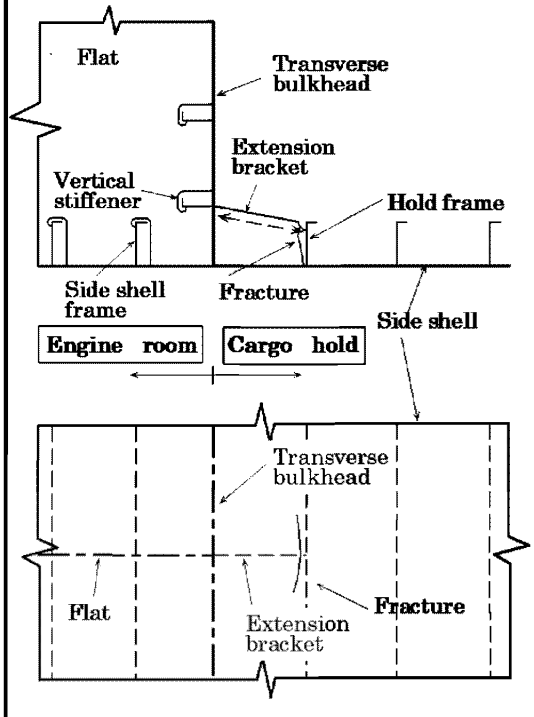


**Sketch of repair**

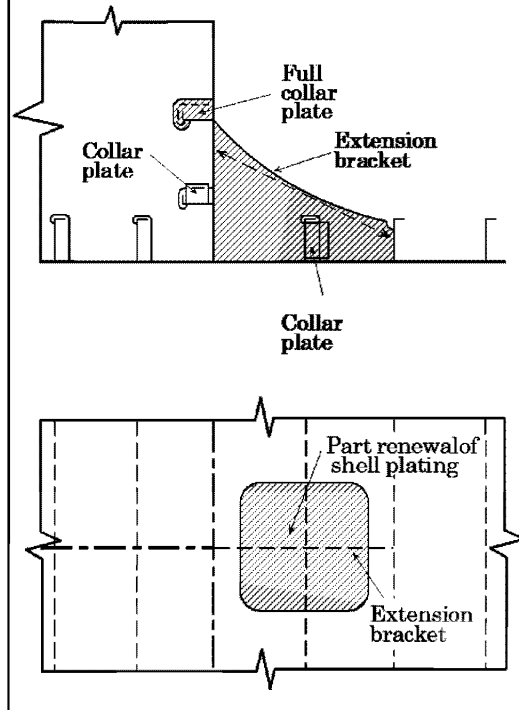


**Notes on possible cause of damage**

1. Damage caused by stress concentration leading to fatigue fracture on side shell. This will be exacerbated because of the greater flexibility of the hold structure in relation to the engine room structure.

**Notes on repairs**

1. The fractured shell plating is to be cropped and part renewed as necessary.
2. Extension bracket is to be modified and collar plates to cut-outs in engine room flat are to be installed.

| GENERAL DRY CARGO SHIPS | Guidelines for Surveys, Assessment and Repair of Hull Structure | |
|---|---|---|
| Part 1 | Cargo hold region | Example No. |
| Area 2 | Side structure | 6 |
| Detail of damage | Fractures in way of continuation/extension brackets at the end of deep ~~cargo~~ tank | |

**Sketch of damage**

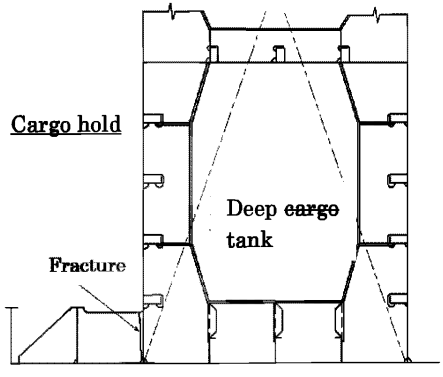


**Sketch of repair**

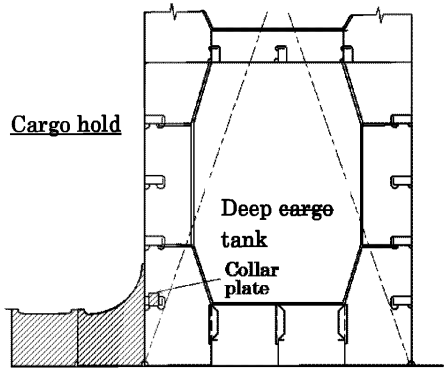


**Notes on possible cause of damage**

1. Damage caused by stress concentration leading to fatigue fracture on side shell. This will be exacerbated because of the greater flexibility of the ordinary hold structure in relation to the deep ~~cargo~~ tank structure.

**Notes on repairs**

1. The fractured shell plate is to be cropped and part renewed as necessary.
2. Brackets should be modified.

# Area 3 Transverse bulkhead structure

## Contents

1 General

2 What to look for
2.1 Material wastage
2.2 Deformations
2.3 Fractures

3 General comments on repair
3.1 Material wastage
3.2 Deformations
3.3 Fractures

| Figures and/or Photographs - Area 3 | |
|---|---|
| No. | Title |
| Figure 1 | Transverse bulkhead - Potential ~~problems~~ problem areas |

| Examples of structural detail failures and repairs - Area 3 | |
|---|---|
| Example No. | Title |
| 1 | Corrosion along inner bottom or tween deck plating |
| 2 | Shear buckling in transverse bulkhead |

# 1 General

**1.1** Watertight transverse bulkheads are usually plane bulkheads stiffened vertically.

**1.2** The opportunity is taken to emphasize that for ordinary transverse watertight bulkheads, in addition to withstanding water pressure in an emergency situation, i.e. flooding, the bulkhead structures constitute main structural strength elements in the structural design of the intact ship. Ensuring that acceptable strength is maintained for these structures is therefore of major importance.

The structure may sometimes appear to be in good condition when it is in fact excessively corroded. In view of this, appropriate access arrangements as indicated in **Chapter 4 Survey planning, preparation and execution** of the Guidelines ~~guidelines~~, should be provided to enable a proper close-up inspection and thickness measurement (See **Figure 1**).

**1.3** Deformation of the plating may lead to the failure and collapse of the bulkhead under water pressure in an emergency situation.

**1.4** It is important to realize that in the event of one hold flooding, the transverse watertight bulkheads should prevent progressive flooding and possible consequent sinking.

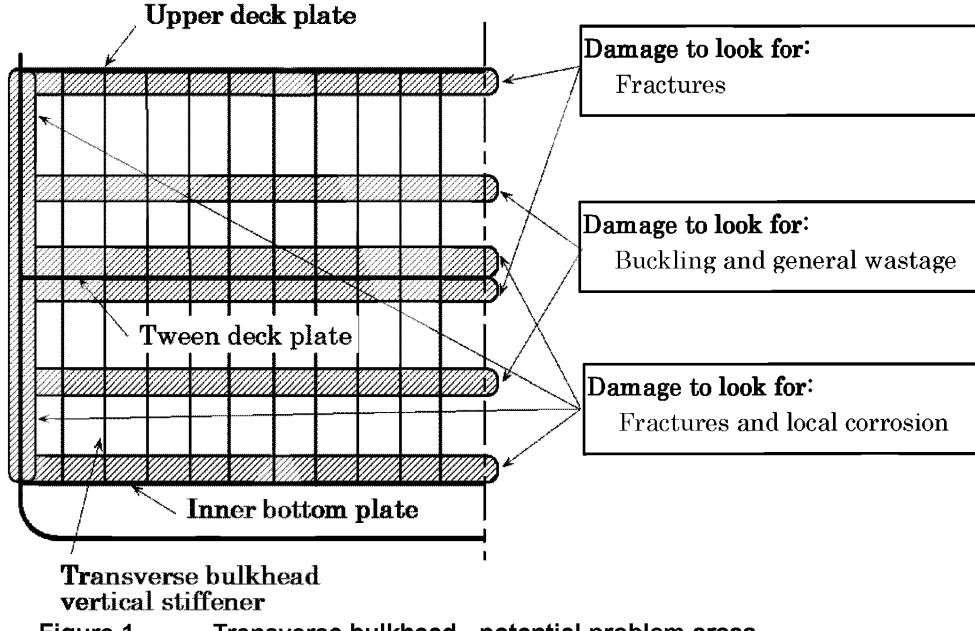


**Figure 1 Transverse bulkhead - potential problem areas**

# 2 What to look for

## 2.1 Material wastage

**2.1.1** Excessive corrosion, in particular at the bottom of the bulkheads. This is created by the corrosive effect of cargo and environment, in particular when the structure is not coated.

**2.1.2** If coatings have broken down and there is evidence of corrosion, it is recommended that

random thickness measurements be taken to establish the level of diminution.

**2.1.3** Where the terms and requirements of the periodical survey dictate thickness measurement, or when the Surveyor deems necessary, it is important that the extent of the gauging be sufficient to determine the general condition of the structure.

## 2.2 Deformations

**2.2.1** Deformation due to mechanical damage is often found in bulkhead structure.

**2.2.2** When the bulkhead has sustained serious uniform corrosion, the bulkhead may suffer shear buckling. Evidence of buckling may be indicated by the peeling of paint or rust. Where, however, deformation resulting from bending or shear buckling has occurred on a bulkhead with a small diminution in thickness, this could be due to poor design or overloading and this aspect should be investigated before proceeding with repairs.

## 2.3 Fractures

**2.3.1** Fractures occur at the boundaries of bulkheads, particularly in way of tank top and side shell.

# 3 General comments on repair

## 3.1 Material wastage

**3.1.1** When the scantlings of transverse watertight bulkheads have reached the diminution levels permitted by the Classification Society involved, the wasted plating and stiffeners are to be cropped and renewed.

## 3.3 Deformations

**3.3.1** If the deformation is local and of a limited extent, it could generally be faired out. Deformed plating in association with a generalized reduction in thickness should be partly or completely renewed.

**3.3.2** Buckling of the bulkhead plating can also occur in way of the side shell resulting from contact damage and this is usually quite obvious. In such cases the damaged area is to be cropped and partly renewed. If the deformation is extensive, replacement of the plating, partly or completely, may be necessary. If the deformation is not in association with generalized reduction in thickness or due to excessive loading, additional strengthening should be considered.

## 3.2 Fractures

**3.2.1** Fractures that occur at the boundary weld connections as a result of latent weld defects should be veed-out, appropriately prepared and re-welded preferably using low hydrogen electrodes or equivalent.

**3.2.2** For fractures other than described in **3.2.1** re-welding may not be a permanent solution and an attempt should be made to improve the design and construction in order to obviate a recurrence.

| GENERAL DRY CARGO SHIPS | Guidelines for Surveys, Assessment and Repair of Hull Structure | |
|---|---|---|
| **Part 1** | **Cargo hold region** | **Example No.** |
| **Area 3** | **Transverse bulkhead structure** | **1** |
| **Detail of damage** | Corrosion along inner bottom or tween deck plating | |

**Sketch of damage**

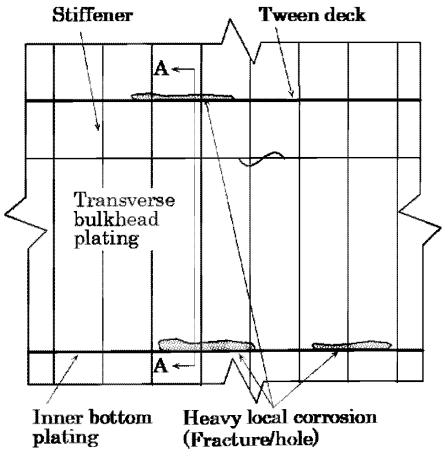


Note: Regarding "View A-A", refer to Example 2 of Area 2 of this part

**Sketch of repair**

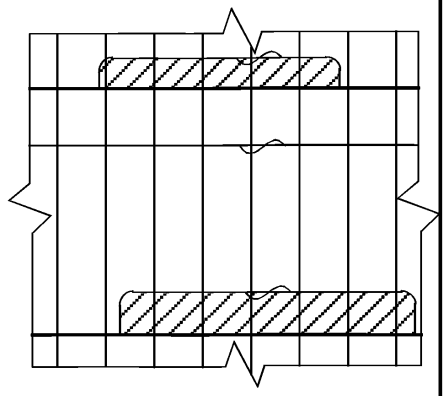

**Notes on possible cause of damage**

1. Heavy corrosion including grooving along inner bottom plating or tween deck due to poor drainage.

**Notes on repairs**

1. The extent of the renewal should be determined carefully. If the renewal plate (original thickness) is welded to thin plate (corroded plate), it may cause stress concentration and cause fracture.
2. Protective coating should be applied.

| GENERAL DRY CARGO SHIPS | Guidelines for Surveys, Assessment and Repair of Hull Structure | |
|---|---|---|
| **Part 1** | **Cargo hold region** | **Example No.** |
| **Area 3** | **Transverse bulkhead structure** | **2** |
| **Detail of damage** | Shear Bbuckling in transverse bulkhead | |

**Sketch of damage**

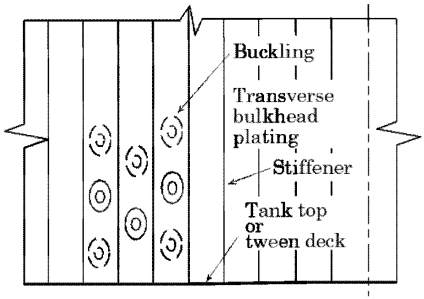


**Sketch of repair**

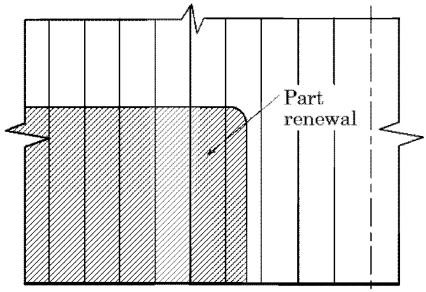


**Notes on possible cause of damage**

1. Heavy general corrosion.

**Notes on repairs**

1. The extent of the renewal should be determined carefully. If the renewal plating (original thickness) is welded to thin plating (corroded plating), it may cause stress concentration and fracture.
2. Protective coating should be applied.

# Area 4 Tween deck structure

## Contents

1 General

2 What to look for
- 2.1 Material wastage
- 2.2 Deformations
- 2.3 Fractures

3 General comments on repair
- 3.1 Material wastage
- 3.2 Deformations
- 3.3 Fractures

| Examples of structural detail failures and repairs - Area 4 | |
|---|---|
| Example No. | Title |
| 1 | Sagging of deck panel/buckling of cantilever beam |

# 1 General

**1.1** A main design principle of the tween deck is to provide easy access to cargo stowed on and underneath the deck. Therefore obstructions such as hatch coamings and deep under deck supporting girders, are usually avoided. The tween deck's main structure consists of cantilever beams supported only by the ship's side structure and cantilever girders supported only by the transverse bulkhead structure (cantilever girders). In some cases the structure may be additionally supported by pillars.

**1.2** The design of the tween deck makes it particularly vulnerable to excess loads of cargo and cargo inertia forces in extreme weather conditions.

# 2 What to look for

## 2.1 Material wastage

**2.1.1** Heavy wastage along the boundaries at ship's sides and at transverse bulkheads may occur as a result of seawater accumulated from wet cargo due to poor drainage. Such damages are related to those suffered at the lower end of side structures and transverse bulkhead structures (See **Area 2**, **Example 2** and **Area 3**, **Example 1**).

## 2.2 Deformations

**2.2.1** Deformed structure may be observed near hatch openings where cargo and/ or hatch cover pontoons may have bumped into the structure during lift on or lift off operations.

**2.2.2** Sagging of plate panels may be caused by lateral overloading as a consequence of excessive cargo loads, improper distribution /support of cargo loads, excessive inertia forces imposed by the cargo in extreme weather conditions, or a combination of these causes. It is essential that an under-deck inspection also be carried out to assess the extent of such damage (See **Example 1**). If the tween deck is supported by pillars, excessive loads could be transmitted to the double bottom structure (inner bottom plating, floors, girders) which could be damaged. Therefore inspection of double bottom tanks may be necessary (See **Area 5**, **Example 2**).

## 2.3 Fractures

**2.3.1** Fatigue fractures are not a common problem on tween decks due to the generally low level of dynamic forces. Fractures may, however, occur in combination with corrosion and deformations described above.

# 3 General comments on repair

## 3.1 Material wastage

**3.1.1** Where parts of the tween deck plating have corroded to the permissible minimum thickness the normal practice is to crop and renew the area affected. Surveyors should request that adjacent areas that remain marginally within the allowable limit should also be renewed. It is recommended that repaired areas be coated.

## 3.2 Deformations

**3.2.1** For deformations caused by abusive handling or obvious overloading, the damaged

structure should be cropped and renewed to original scantlings.

**3.2.2** If the cause of the deformations is not clear and design weakness is suspected, an appropriate reinforcement is to be considered in addition to cropping and renewal of the damaged part.

## 3.3 Fractures

**3.3.1** The proposed repair for corrosion and deformations described above also apply when associated fractures occur.

| GENERAL DRY CARGO SHIPS | Guidelines for Surveys, Assessment and Repair of Hull Structure | |
|---|---|---|
| Part 1 | Cargo hold region | Example No. |
| Area 4 | Tween deck structure | 1 |
| Detail of damage | Sagging of deck panel/buckling of cantilever beam | |

**Sketch of damage**

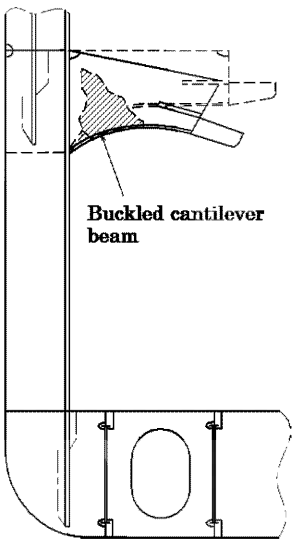


**Sketch of repair**

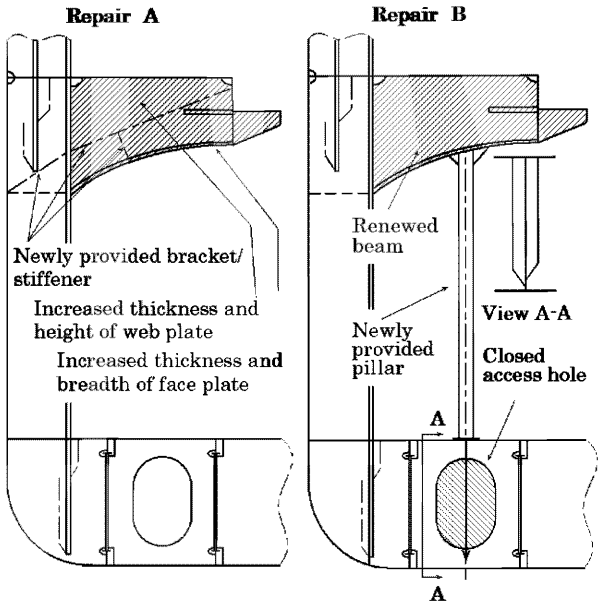


**Notes on possible cause of damage**

1. Poor design, overloading and/or excessive inertia force caused in heavy weather.

**Notes on repairs**

1. The affected structures are to be cropped and renewed.
2. **Repair A**:
   Reinforcement should be considered by increased scantlings of beam and/or additional stiffeners.
3. **Repair B**:
   Pillars may be provided for reinforcement subject to the approval of the owner. In such a case, reinforcement of the floor under the pillar should be considered. (In the above example, access hole was closed.)

# Area 5 Double bottom structure

## Contents


1 General

2 What to look for - Tank top inspection
- 2.1 Material wastage
- 2.2 Deformations
- 2.3 Fractures

3 What to look for - Double bottom tank inspection
- 3.1 Material wastage
- 3.2 Deformations
- 3.3 Fractures

4 What to look for - External bottom inspection
- 4.1 Material wastage
- 4.2 Deformations
- 4.3 Fractures

5 General comments on repair
- 5.1 Material wastage
- 5.2 Deformations
- 5.3 Fractures


| Figures and/or Photographs - Area 5 | |
|---|---|
| No. | Title |
| Photograph 1 | ~~Fractured inner bottom plating due to heavy corrosion on both sides~~ Heavy corrosion affecting inner bottom plating |
| Photograph 2 | ~~Grooving corrosion of welding of bottom plating~~ Damaged inner bottom plating |
| Photograph 3 | ~~Section of the grooving shown in Photograph 2~~ Repairs of damaged inner bottom plating |
| Photograph 4 | Grooving corrosion of welding of bottom plating |
| Photograph 5 | Section of the grooving shown in Photograph 4 |

| Examples of structural detail failures and repairs - Area 5 | |
|---|---|
| Example No. | Title |
| 1 | Fractures in inner bottom plating around container bottom pocket |
| 2 | Dented inner bottom plating and buckled/fractured floor under pillar |
| 3-a | Fractures at the connection of bottom/inner bottom longitudinal to floor stiffener |
| 3-b | Fractures at the connection of bottom/inner bottom longitudinal to floor stiffener |
| 4 | Fractures and buckling in way of a cut-out for the passage of a longitudinal |

| Examples of structural detail failures and repairs - Area 5 | |
|---|---|
| **Example No.** | **Title** |
| | through a transverse primary member |
| 5 | Fractures in bottom shell plating/inner bottom plating at the corner of drain hole/air hole in longitudinal |
| 6 | Fracture in bottom shell plating along side girder and/or bottom longitudinal |
| 7 | Fracture in bottom plating below suction head |
| 8 | Fracture in shell plating at the termination of bilge keel |
| 9 | Corrosion in bottom plating below sounding pipe |

# 1 General

**1.1** Double bottom structure is subjected to longitudinal hull girder bending, caused by cargo distribution and wave action. It is also subjected to longitudinal and transverse local bending due to the effects of cargo load from the inside in association with the counteracting forces from the outside. The double bottom structure is also subjected to the effects of cargo loading and unloading. The double bottom structure forward may also be subjected to increased dynamic forces due to slamming.

# 2 What to look for - Tank top inspection

## 2.1 Material wastage

**2.1.1** The general condition with regard to corrosion of the tank top structure may be observed by visual inspection. The level of wastage of tank top plating may have to be established by means of thickness measurement. Special attention should be given to the intersection of the tank top with the side shell and transverse bulkheads where water may have accumulated and consequently accelerated the rate of corrosion.

**2.1.2** When the tank top plating has been covered with dunnage or ceiling the plating may have suffered heavy corrosion, due to high humidity, and lack of proper maintenance (See **Photograph 1**).

**2.1.3** The bilge wells should be cleaned and inspected closely since heavy pitting corrosion may have occurred due to accumulated water in the wells. Special attention should be paid to the plating in way of the bilge suction and sounding pipes.

**2.1.4** Special attention should also be paid to areas where pipes penetrate the tank top.



~~**Photograph 1**~~
~~**Fractured inner bottom plating due to heavy corrosion on both sides**~~



**Photograph 1 Heavy corrosion affecting inner bottom plating**



**Photograph 2 Damaged inner bottom plating**



**Photograph 3 Repairs of damaged inner bottom plating**

## 2.2 Deformations

**2.2.1** Buckling of the tank top plating may occur between longitudinals in areas subject to in-plane transverse compressive stresses or between floors in areas subject to in-plane longitudinal compressive stresses.

**2.2.2** Deformed structures may be observed in areas of the tank top due to overloading of cargo, impact of cargo during loading/unloading operations, or the use of mechanical unloading equipment.

**2.2.3** Deformations may also occur at the heel of pillars fitted to support the tween deck structure (See **Example 2**).

**2.2.4** Whenever deformations are observed on the tank top, further inspection in the double bottom tanks is imperative in order to determine the extent of the damage. The deformation may cause the breakdown of coating, if fitted, within the double bottom, which in turn may lead to accelerated corrosion rate in these unprotected areas.

## 2.3 Fractures

**2.3.1** Fractures will normally be found by close-up inspection paying particular attention to the boundary connections of the tank top and to penetrations through the tank top (See **Example 1**).

**2.3.2** Fractures that extend through the thickness of the plating or through the boundary welds may be observed during pressure testing of the double bottom tanks.

# 3 What to look for - Double bottom tank inspection

## 3.1 Material wastage

**3.1.1** The level of wastage of double bottom internal structure (longitudinals, frames, floors, girders, etc.) may have to be established by means of thickness measurements. The combined effects of the marine environment, the carriage of seawater ballast, cyclical loading etc. may result in high corrosion rates.

**3.1.2** If the protective coating is not properly maintained, structure in the ballast tank may suffer heavy corrosion. Upper part of the structure of double bottom tanks usually has more severe corrosion than the lower part.

**3.1.3** Corrosion in the structure of ballast tanks near heated fuel tanks may be accelerated by the high temperature due to heated fuel oil. The rate of corrosion depends on several factors such as:

- Temperature and heat input to the ballast tank.
- Condition of original coating and its maintenance. (It is preferable for applying the protective coating of ballast tank at the building of the ship, and for subsequent maintenance, that the stiffeners on the boundaries of the fuel tank be fitted within the fuel tank instead of the ballast tank).
- Ballasting frequency and operations.
- Age of ship and associated stress levels as corrosion reduces the thickness of the structural elements and can result in fracturing and buckling.

**3.1.4** Shell plating localized wear is caused by erosion and cavitation of the fluid flowing through the suction head. In addition, the suction head will be positioned in the lowest part of the tank and water/mud will cover the area even when the tank is empty. The condition of the shell plating may be established by feeling by hand beneath the suction head. When in doubt, the lower part of the suction head should be removed and thickness measurements taken. If the vessel is docked, the thickness can be measured from below. If the distance between the suction head and the underlying shell plating is too small to permit access, the suction head should be dismantled. The shell plating below the sounding pipe should also be carefully examined. When a striking plate has not been fitted or is worn out, heavy corrosion can be caused by the striking of the weight of the sounding tape (See **Example 2** in **Part 3**).

## 3.2 Deformations

**3.2.1** Deformations may occur due to the overloading of the cargo, dynamic forces due to slamming in the forward part of the vessel, or from the impact of cargo loading/unloading. Special attention should be paid to those areas of deformation identified during the tank top or external bottom inspections. Deformations in the structure not only reduce the strength of the structure but may also cause breakdown of the coating, leading to accelerated corrosion.

**3.3.2** In general, the termination of the longitudinal structural members at the collision bulkhead and engine room forward bulkhead is prone to fractures. In order to avoid stress concentration due to discontinuity appropriate stiffeners are to be provided in the opposite space. If such stiffeners are not provided, or are deficient due to corrosion or misalignment, fractures may occur at the terminations.

## 3.3 Fractures

**3.3.1** Fractures may be caused by the cyclic deflection of the double bottom induced by repeated loading from the sea or due to poor "through-thickness" properties of the plating. Scallops in the bottom girders can create areas of stress concentrations which further increase the risk of fractures.

# 4 What to look for - External bottom inspection

## 4.1 Material wastage

**4.1.1** Hull structure below the water line can usually be inspected only when the ship is dry-docked. Therefore, the structure should be inspected carefully, taking into account the period until the next scheduled dry-docking. The level of wastage of the bottom plating may have to be established by means of thickness measurements.

**4.1.2** Severe grooving along welding of bottom plating is often found (See **Photographs ~~24~~ 24** and **~~35~~ 35**). This grooving can be accelerated by poor maintenance of the protective coating and/or sacrificial anodes fitted to the bottom plating.

**4.1.3** Bottom or "docking" plugs should be carefully examined for excessive corrosion along the edge of the weld connecting the plug to the bottom plating.

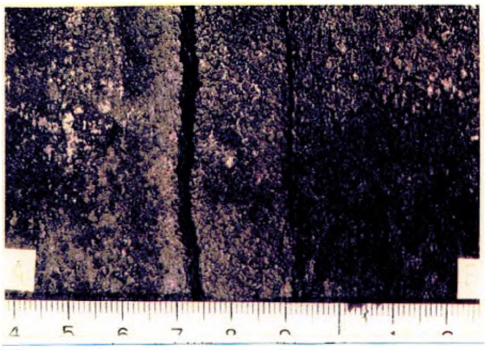

**Photograph ~~24~~ 24**
**Grooving corrosion of welding of bottom plating**

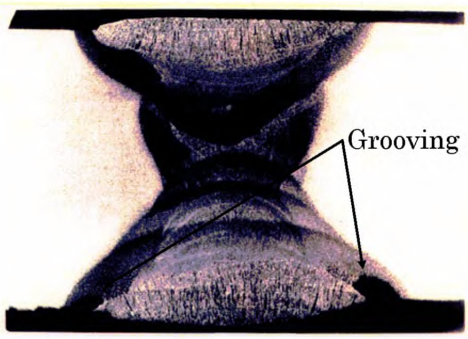


**Photograph ~~35~~ 35**
**Section of the grooving shown in Photograph ~~24~~ 24**

## 4.2 Deformations

**4.2.1** Buckling of the bottom shell plating may occur between longitudinals or floors in areas subject to in-plane compressive stresses (either longitudinally or transversely). Deformations may also be attributed to slamming due to wave action in the forward part of the vessel, or contact with an underwater object. When deformation of the shell plating is found, the area should be inspected internally. Even if the deformation is small, the internal structure may have suffered serious damage.

## 4.3 Fractures

**4.3.1** The bottom shell plating should be inspected when it has dried since fractures in shell plating may be easily detected if water comes out of the fracture in clear contrast to the

dry shell plating. Therefore if the ship has been inspected while wet, it is recommended that the ship be inspected again when dry.

**4.3.2** Fractures in butt welds and fillet welds (particularly at the wrap around at scallops and ends of bilge keels) are sometimes observed and may propagate into the bottom plating. The cause of the fractures in butt welds is usually a weld defect or grooving. If the bilge keels are divided at the block joints of hull, all ends of the bilge keels are to be inspected.

# 5 General comments on repair

## 5.1 Material wastage

**5.1.1** In general, where the tank top, double bottom internal structure, and bottom shell plating have wasted to the allowable level, the normal practice is to crop and renew the affected area. Where possible, plate renewals should be for the full width of the plate but in no case should they be less than the minimum set in paragraph 6.2 of Part B of IACS Recommendation 47, ~~450mm in width~~ to avoid build up of residual stresses due to welding. Repair work in double bottom will require careful planning, accessibility, and gas freeing of fuel oil tanks. Doubler plates are not to be used for compensation of wasted plates.

**5.1.2** Plating below suction heads and sounding pipes is to be replaced if the average thickness is below the acceptable limit for replacement (See **Example 7**). When scattered deep pitting is found it may be repaired by welding.

## 5.2 Deformations

**5.2.1** Extensive deformation should be corrected by replacement of the tank top and bottom shell plating, and the deformed portion of affected girders or floors. If there is no evidence that the deformation was caused by grounding or other excessive local loading, or that it is associated with excessive wastage, additional internal stiffening may need to be provided. In this regard, the Classification Society concerned should be contacted.

## 5.3 Fractures

**5.3.1** Fractures of a minor nature may be veed-out and rewelded. Where cracking is more extensive, the structure is to be cropped and renewed.

**5.3.2** For fractures caused by the cyclic deflection of the double bottom, reinforcement of the structure may be required in addition to cropping and renewal of the fractured part.

**5.3.3** For fractures due to poor through thickness properties of the plating, cropping and renewal with steel having adequate through thickness properties is an acceptable solution.

**5.3.4** Damaged bilge keels must be promptly repaired if there is distortion or fractures. Since the bilge keel is subjected to the same longitudinal stress level as the bilge plating, propagation of fractures into the shell could result in a serious failure. Fractured butt welds should be repaired using full penetration welds and proper welding procedures.

**5.3.5** Ends of bilge keels require internal support. This should be taken into account when cropping a damaged part of a bilge keel (See **Example 8**).

| GENERAL DRY CARGO SHIPS | Guidelines for Surveys, Assessment and Repair of Hull Structure | |
|---|---|---|
| Part 1 | Cargo hold region | Example No. |
| Area 5 | Double bottom structure | 1 |
| Detail of damage | Fractures in inner bottom plating around container bottom pocket | |

**Sketch of damage**

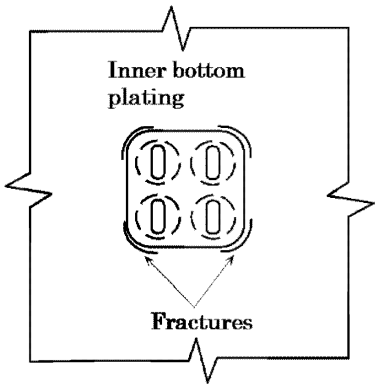


**Sketch of repair**

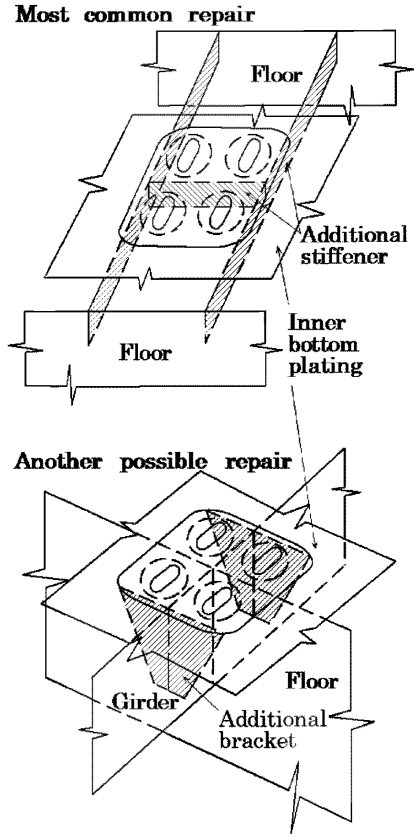


**Notes on possible cause of damage**

1. Pocket is not supported correctly by floor, longitudinal and/or stiffener.

**Notes on repairs**

1. Fractured plating should be cropped and part renewed.
2. Adequate reinforcement should be considered.

| GENERAL DRY CARGO SHIPS | Guidelines for Surveys, Assessment and Repair of Hull Structure | |
|---|---|---|
| Part 1 | Cargo hold region | Example No. |
| Area 5 | Double bottom structure | 2 |
| Detail of damage | Dented inner bottom plating and buckled/fractured floor under pillar | |

**Sketch of damage**

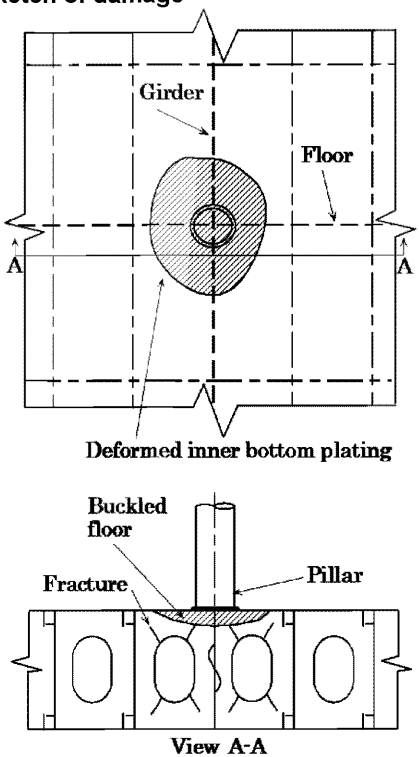


**Sketch of repair**

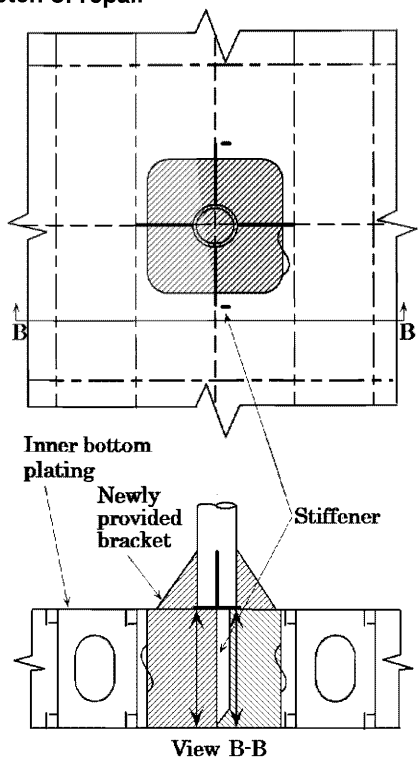


**Notes on possible cause of damage**

1. Inadequate arrangement and/or reinforcement of access holes.
2. Excessive deck-loading on tween deck.

**Notes on repairs**

1. Dented inner bottom plating is to be cropped and part renewed.
2. The fractured floor is to be cropped and part renewed.
3. Access holes should be closed by insert plates.
4. Stiffener on floor/girder and/or brackets should be considered. (Fitting of brackets in the hold is subject to the agreement of the owner.)

| GENERAL DRY CARGO SHIPS | Guidelines for Surveys, Assessment and Repair of Hull Structure | |
|---|---|---|
| Part 1 | Cargo hold region | Example No. |
| Area 5 | Double bottom structure | 3-a |
| Detail of damage | Fractures at the connection of bottom/inner bottom longitudinal to floor stiffener | |

**Sketch of damage**

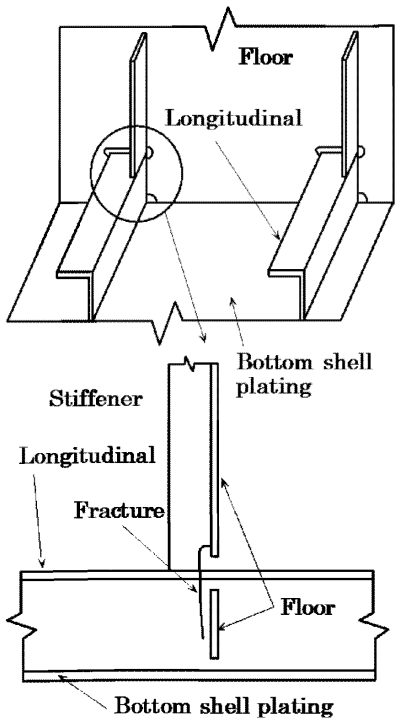


Note: same damage may occur at similar connection to inner bottom plating

**Sketch of repair**

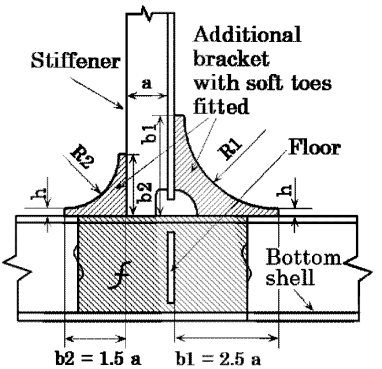


*f*: Where required, the longitudinal to be cropped and part renewed

1. For a slope at toes max. 1 : 3, R1 = (b1-h) x 1.6 and R2 = (b2-h) x 1.6
2. Soft toe bracket to be welded first to longitudinal
3. Scallop in bracket to be as small as possible, recommended max. 35 mm
4. If toes of brackets are ground smooth, full penetration welds in way to be provided
5. Maximum length to thickness ratio = 50 : 1 for unstiffened bracket edge
6. Toe height, h, to be as small as possible (10- 15 mm)

**Notes on possible cause of damage**

1. Damage can be caused by stress concentrations leading to accelerated fatigue in this region.

**Notes on repairs**

1. If fracture extends to over one third of the depth of the longitudinal, then crop and part renew. Otherwise the fracture can be veed-out and welded.

| GENERAL DRY CARGO SHIPS | Guidelines for Surveys, Assessment and Repair of Hull Structure | |
|---|---|---|
| **Part 1** | **Cargo hold region** | **Example No.** |
| **Area 5** | **Double bottom structure** | **3-b** |
| **Detail of damage** | Fractures at the connection of bottom/inner bottom longitudinal to floor stiffener | |

**Sketch of damage**

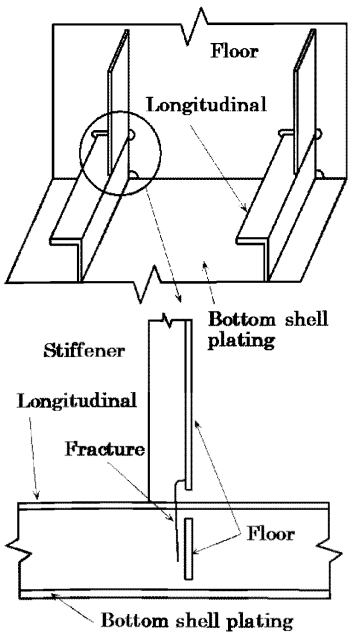


Note: same damage may occur at similar connection to inner bottom plating

**Sketch of repair**

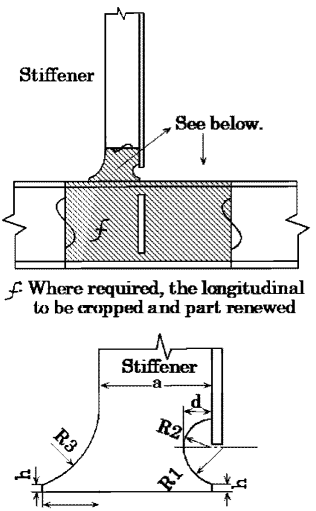


f: Where required, the longitudinal to be cropped and part renewed

Various cut-out shapes have been developed. The following is one example.

1. Toe height as small as possible (h = 10 - 15 mm)
2. Depth "d" of key hole notch as small a possible, max. 30 mm
3. For a slope at toe max. 1 : 3
4. R1 = 1.5d, R2 = d and R3 = 1.5c

**Notes on possible cause of damage**

1. Damage can be caused by stress concentrations leading to accelerated fatigue in this region.

**Notes on repairs**

1. If fracture extends to over one third of the depth of the longitudinal, then crop and part renew. Otherwise the fracture can be veed-out and welded.

| GENERAL DRY CARGO SHIPS | Guidelines for Surveys, Assessment and Repair of Hull Structure | |
|---|---|---|
| **Part 1** | **Cargo hold region** | **Example No.** |
| **Area 5** | **Double bottom structure** | **4** |
| **Detail of damage** | Fractures and buckling in way of a cut-out for the passage of a longitudinal through a transverse primary member | |

**Sketch of damage**

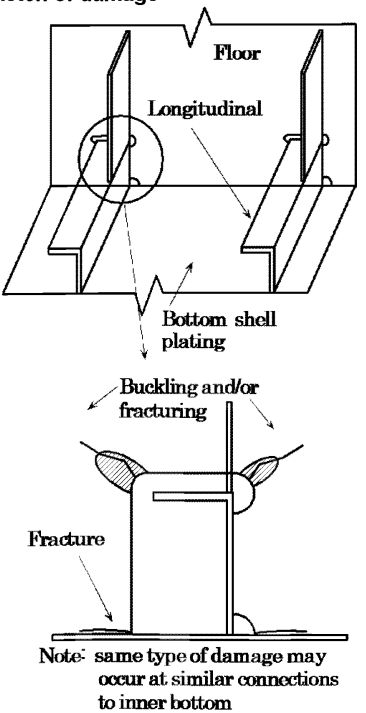


**Sketch of repair**

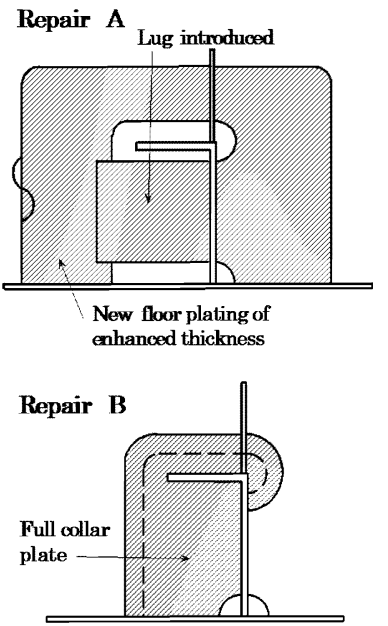


**Notes on possible cause of damage**

1. Damage can be caused by general levels of corrosion and presence of stress concentration associated with the presence of a cut-out.

**Notes on repairs**

1. If fractures are significant then crop and part renew the floor plating otherwise the fracture can be veed-out and welded provided the plating is not generally corroded.
   **Repair B** is to be incorporated if the lug
2. proves to be ineffective.

| GENERAL DRY CARGO SHIPS | Guidelines for Surveys, Assessment and Repair of Hull Structure | |
|---|---|---|
| **Part 1** | **Cargo hold region** | **Example No.** |
| **Area 5** | **Double bottom structure** | **5** |
| **Detail of damage** | Fractures in bottom shell plating/inner bottom plating at the corner drain hole/air hole in longitudinal | |

**Sketch of damage**

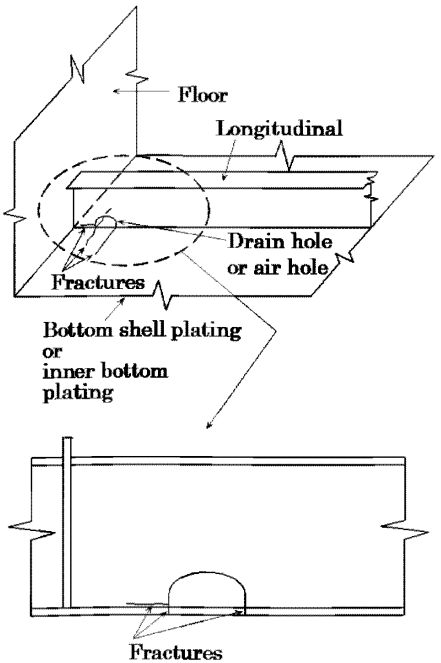


**Sketch of repair**

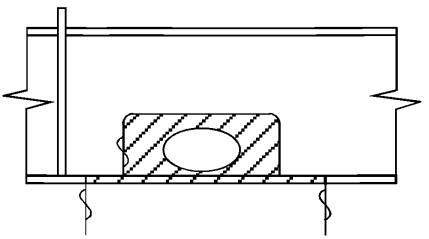

**Notes on possible cause of damage**

1. Stress concentration and/or corrosion due to stress concentration at the corner of drain hole/air hole.

**Notes on repairs**

1. Fractured plating should be cropped and part renewed.
2. If fatigue life is to be improved, change of drain hole/air hole shape is to be considered.

| GENERAL DRY CARGO SHIPS | Guidelines for Surveys, Assessment and Repair of Hull Structure | Example No. 6 |
|---|---|---|
| Part 1 | Cargo hold region | |
| Area 5 | Double bottom structure | |
| Detail of damage | Fracture in bottom shell plating along side girder and/or bottom longitudinal | |

**Sketch of damage**

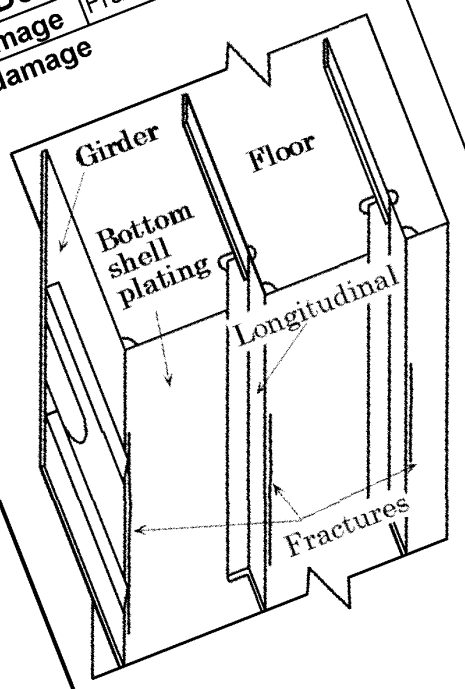


**Sketch of repair**

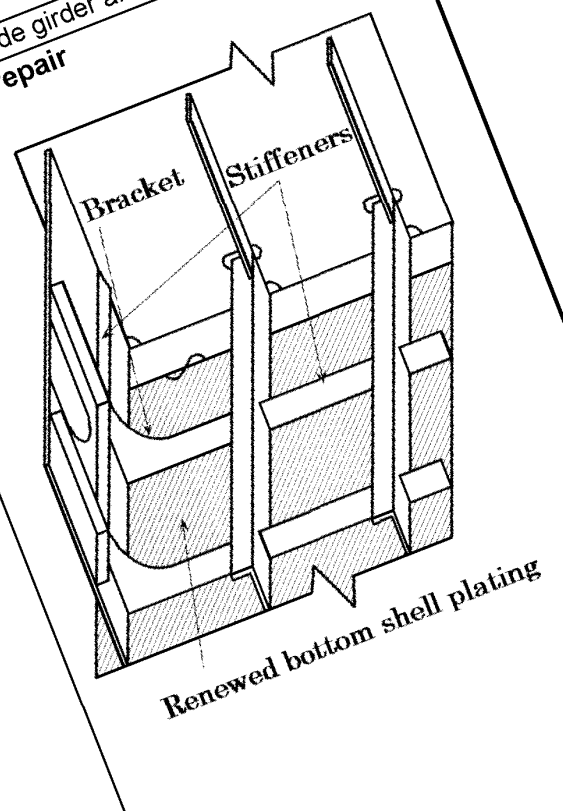


**Notes on possible cause of damage**

1. Vibration.

**Notes on repairs**

1. Fractured bottom shell plating should be cropped and renewed.
2. Natural frequency of the panel should be changed, e.g. reinforcement by additional stiffener/bracket.

| GENERAL DRY CARGO SHIPS | Guidelines for Surveys, Assessment and Repair of Hull Structure | |
|---|---|---|
| Part 1 | Cargo hold region | Example No. |
| Area 5 | Double bottom structure | 7 |
| Detail of damage | Corrosion in bottom plating below suction head | |

**Sketch of damage**

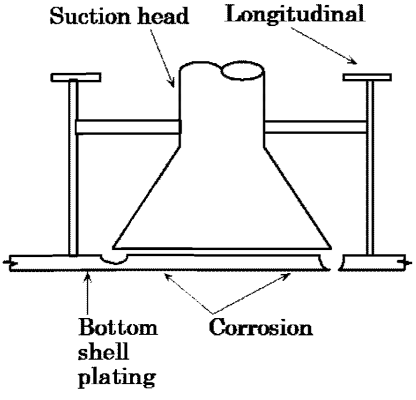


**Sketch of repair**

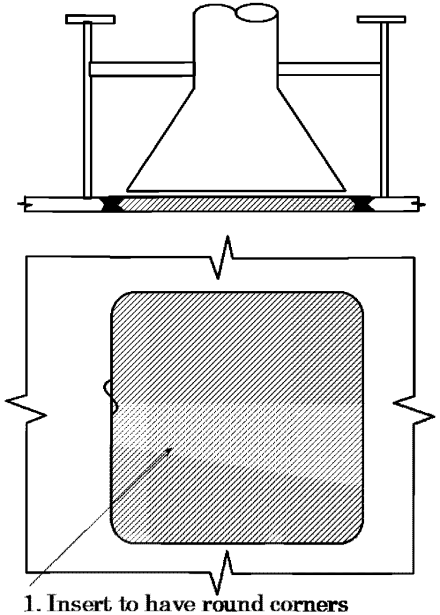

1. Insert to have round corners
2. Non-destructive examination to be applied after welding based on the Society's rules

**Notes on possible cause of damage**

1. High flow rate associated with insufficient corrosion prevention system.
2. Galvanic action between dissimilar metals

**Notes on repairs**

1. Affected plating should be cropped and part renewed. Thicker plate and suitable beveling should be considered.
2. If the corrosion is limited to a small area, i.e. pitting corrosion, repair by welding is acceptable.

| GENERAL DRY CARGO SHIPS | Guidelines for Surveys, Assessment and Repair of Hull Structure | |
|---|---|---|
| Part 1 | Cargo hold region | Example No. |
| Area 5 | Double bottom structure | 8 |
| Detail of damage | Fracture in shell plating at the termination of bilge keel | |

**Sketch of damage**

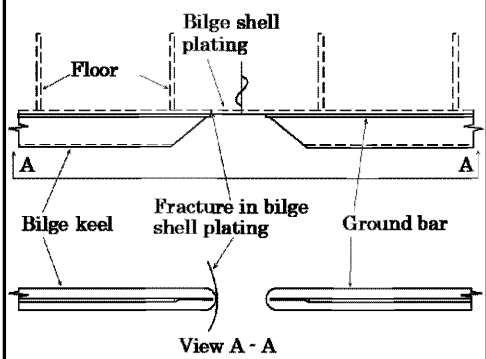


**Sketch of repair**

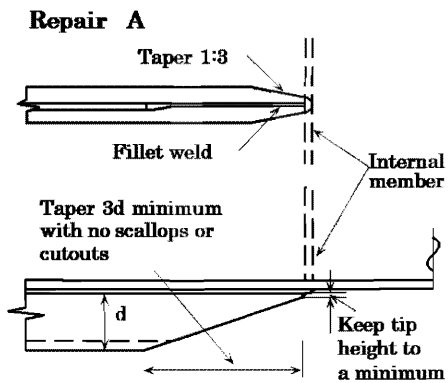


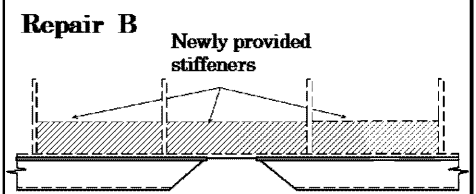


**Notes on possible cause of damage**

1. Poor design causing stress concentration.

**Notes on repairs**

1. Fractured plating is to be cropped and renewed.
2. Reduction of stress concentration of the bilge keel end should be considered.
   **Repair A**: Modification of the detail of end
   **Repair B**: New internal stiffeners
   Instead of **Repair A** or **B** continuous ground
3. bar and bilge keel should be considered.

| GENERAL DRY CARGO SHIPS | Guidelines for Surveys, Assessment and Repair of Hull Structure | |
|---|---|---|
| Part 1 | Cargo hold region | Example No. |
| Area 5 | Double bottom structure | 9 |
| Detail of damage | Corrosion in bottom plating below sounding pipe | |

**Sketch of damage**

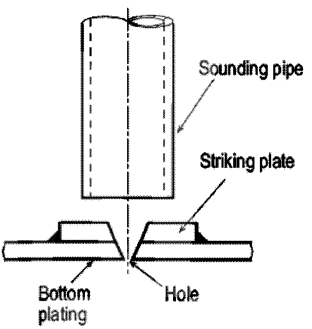


**Sketch of repair**

**Repair A**

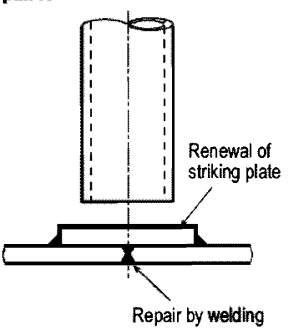


**Repair B**

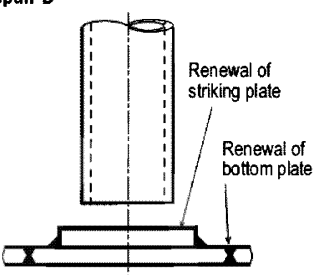


**Notes on possible cause of damage**

1. Accelerated corrosion of striking plate by the striking of the weight of the sounding tape.

**Notes on repairs**

1. Corroded bottom plating should be welded or partly cropped and renewed if considered necessary.
2. Corroded striking plate should be renewed.

# Part 2 Fore and aft end regions

## Contents

Area 1 - Fore end structure
Area 2 - Aft end structure
Area 3 - Stern frame, rudder arrangement and propeller shaft supports

---

# Area 1 Fore End Structure

## Contents

1 General

2 What to look for
2.1 Material wastage
2.2 Deformations
2.3 Fractures

3 General comments on repair
3.1 Material wastage
3.2 Deformations
3.3 Fractures

| Figures and/or Photographs - Area 1 | |
|---|---|
| No. | Title |
| Figure 1 | Fore end structure - Potential problem areas |

| Examples of structural detail failures and repairs - Area 1 | |
|---|---|
| Example No. | Title |
| 1 | Fracture and deformation of bow transverse web in way of cut-outs for side longitudinals |
| 2 | Fracture at toe of web frame bracket connection to stringer platform bracket |
| 3 | Fracture in side shell plating in way of chain locker |
| 4 | Deformation of forecastle deck |
| 5 | Deformation of side shell plating in way of forecastle space |
| 6 | Fracture in forecastle deck plating at bulwark |

# 1 General

**1.1** Due to the environmental conditions, wastage of the internal structure of the fore peak tank can be a major problem for many, and in particular ageing, general dry cargo ships. Corrosion may be accelerated in the cases of uncoated tanks or where the coating has not been maintained, and can lead to fractures of the internal structure, and the tank boundaries.

**1.2** Deformation can be caused by contact which may result in damage to the internal structure and lead to fractures in the shell plating.

**1.3** Fractures to the internal structure in the fore peak tank and spaces can also result from wave impact load due to slamming/panting.

**1.4** Forecastle structure is exposed to severe environments and suffers damage, such as deformation of deck structure, deformation and fracture of bulwarks and collapse of masts, etc.

**1.5** Shell plating around anchor and hawse pipe may have corrosion, deformation and possible fracture due to movement of improperly stowed anchor.

# 2 What to look for

## 2.1 Material wastage

**2.1.1** Wastage (and possible subsequent fractures) is more likely to show initially in locations as indicated in **Figure 1**. A close-up inspection should be carried out. In addition, a representative selection of thickness measurements should be taken with particular attention being given to locations such as chain lockers.

**2.1.2** Structure in chain lockers is liable to have heavy corrosion because of mechanical damage to the protective coating by anchor chains. In some ships, e.g. relatively small ships, side shell plating may form boundaries of the chain lockers. Consequently, heavy corrosion may result in a hole in the side shell plating.

### 2.2 Deformations

**2.2.1** Contact with quaysides, etc. can result in large deformations and fractures of the internal structure. This may affect the watertight integrity of the tank boundaries and collision bulkhead. A close-up examination of the damaged area should be carried out.

### 2.3 Fractures

**2.3.1** Fractures in the fore peak tank are normally found by close-up inspection of the internal structure.

**2.3.2** Fractures that extend through the thickness of the plating or through the boundary welds may be observed during pressure testing of the double bottom tanks.

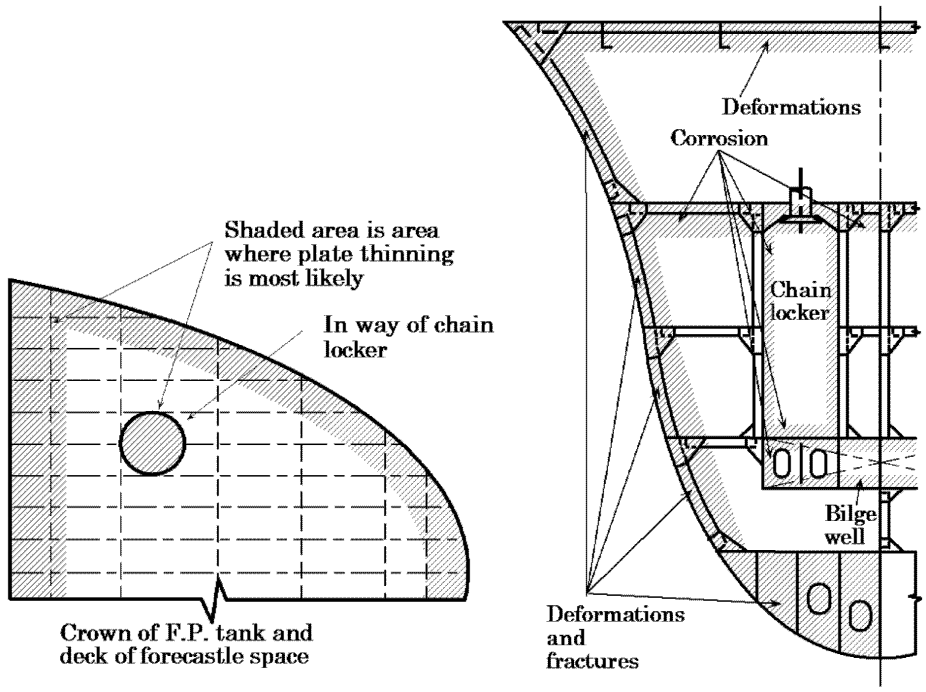


**Figure 1 Fore end structure - Potential problem areas**

# 3 General comments on repair

## 3.1 Material wastage

**3.1.1** The necessary extent of steel renewal can be established when comparing the measured thickness to the original values, or the minimum acceptable values for this part of the structure. The repair work in the tank will require planning, to permit accessibility.

## 3.2 Deformations

**3.2.1** Deformed structure caused by contact should be cropped and part renewed or faired in place depending on the nature and extent of damage.

## 3.3 Fractures

**3.3.1** In the case of fractures caused by sea-loads the structure should be cropped and renewed. Increased thickness of plating and/or design modification to reduce stress concentrations should be considered (See **Examples 1**, **2** and **6**).

| GENERAL DRY CARGO SHIPS | Guidelines for Surveys, Assessment and Repair of Hull Structure | |
|---|---|---|
| Part 2 | Fore and aft end regions | Example No. |
| Area 1 | Fore end structure | 1 |
| Detail of damage | Fracture and deformation of bow transverse web in way of cut-outs for side longitudinals | |

**Sketch of damage**

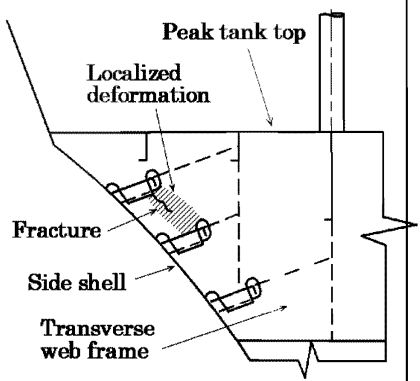


**Sketch of repair**

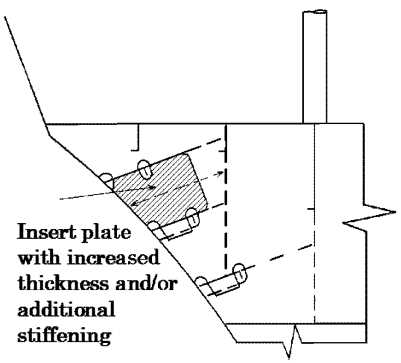


**Notes on possible cause of damage**

1. Localized material wastage in way of coating failure at cut-outs and sharp edges due to working of the structure.
2. Dynamic seaway loading in way of bow flare.

**Notes on repairs**

1. Sufficient panel strength to be provided to absorb the dynamic loads enhanced by bow flare shape.

| GENERAL DRY CARGO SHIPS | Guidelines for Surveys, Assessment and Repair of Hull Structure | |
|---|---|---|
| Part 2 | Fore and aft end regions | Example No. |
| Area 1 | Fore end structure | 2 |
| Detail of damage | Fracture at toe of web frame bracket connection to stringer platform bracket | |

**Sketch of damage**

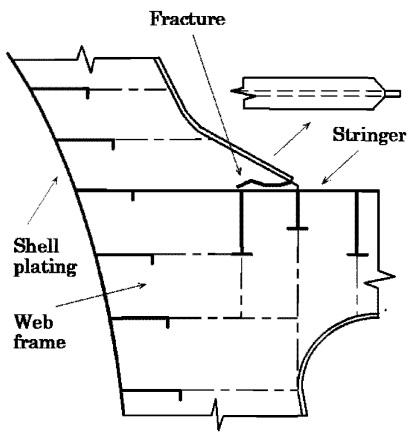


**Sketch of repair**

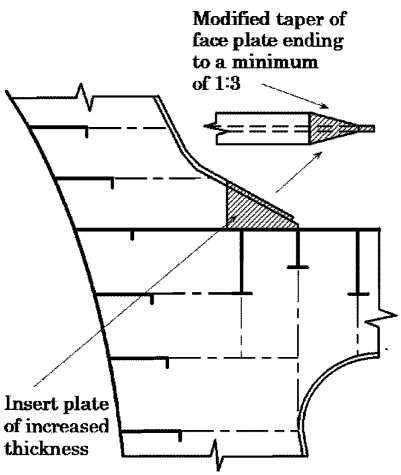


**Notes on possible cause of damage**

1. Inadequate bracket forming the web frame connection to the stringer.
2. Localized material wastage in way of coating failure at bracket due to flexing of the structure.
3. Dynamic seaway loading in way of bow flare.

**Notes on repairs**

1. Adequate soft nose bracket endings with a face plate taper of at least 1 : 3 to be provided.

| GENERAL DRY CARGO SHIPS | Guidelines for Surveys, Assessment and Repair of Hull Structure | |
|---|---|---|
| Part 2 | Fore and aft end regions | Example No. |
| Area 1 | Fore end structure | 3 |
| Detail of damage | Fracture in side shell plating in way of chain locker | |

**Sketch of damage**

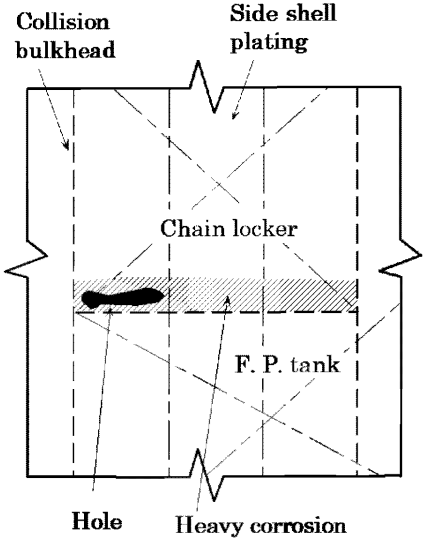


**Sketch of repair**

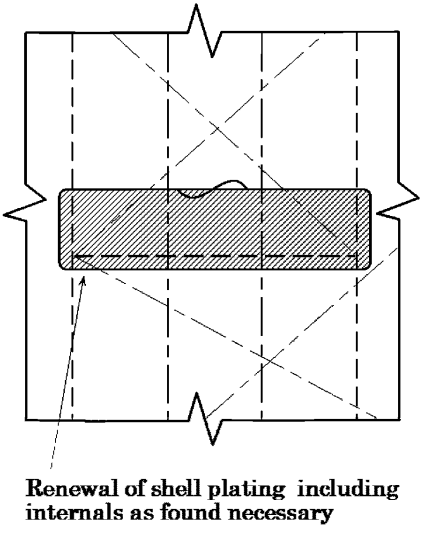


**Notes on possible cause of damage**

1. Heavy corrosion in region where mud is accumulated.

**Notes on repairs**

1. Corroded plating should be cropped and renewed.
2. Protective coating should be applied.

| GENERAL DRY CARGO SHIPS | Guidelines for Surveys, Assessment and Repair of Hull Structure | |
|---|---|---|
| Part 2 | Fore and aft end regions | Example No. |
| Area 1 | Fore end structure | 4 |
| Detail of damage | Deformation of forecastle deck | |

**Sketch of damage**

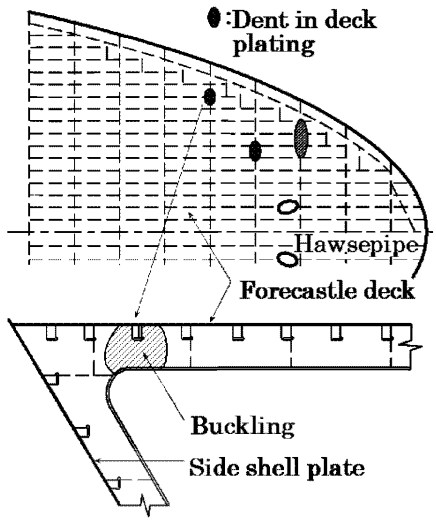


**Sketch of repair**

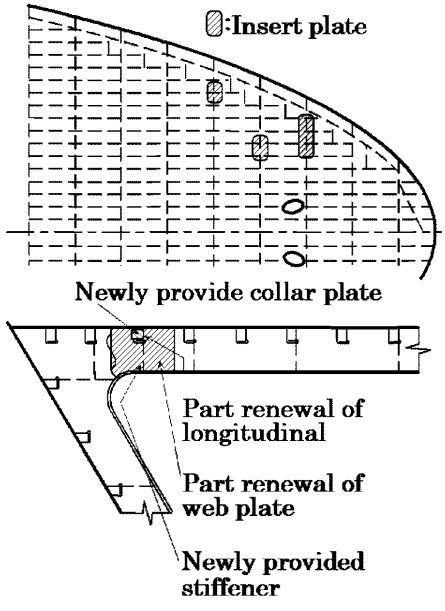


**Notes on possible cause of damage**

1. Green sea on deck.
2. Insufficient strength.

**Notes on repairs**

1. Deformed structure should be cropped and renewed.
2. Additional stiffeners on web of beam should be considered for reinforcement.

| GENERAL DRY CARGO SHIPS | Guidelines for Surveys, Assessment and Repair of Hull Structure | |
|---|---|---|
| Part 2 | Fore and aft end regions | Example No. |
| Area 1 | Fore end structure | 5 |
| Detail of damage | Deformation of side shell plating in way of forecastle space | |

**Sketch of damage**

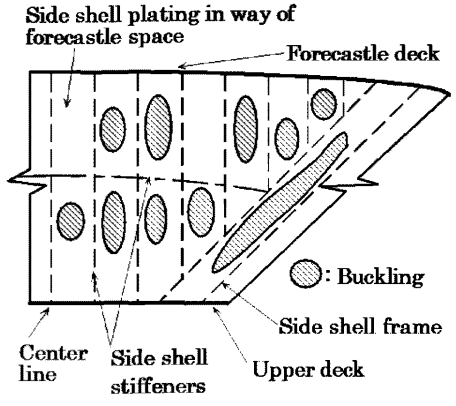


**Sketch of repair**

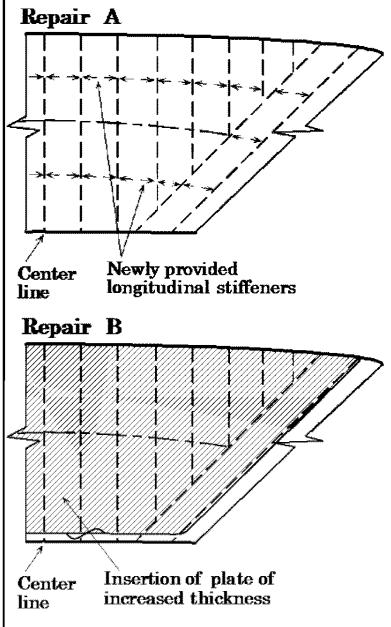


**Notes on possible cause of damage**

1. Heavy weather.
2. Insufficient strength.

**Notes on repairs**

1. Deformed part should be cropped and part renewed.
2. **Repair A**
   Additional stiffeners between existing stiffeners should be considered.
   **Repair B**
   Insertion of plate of increased thickness with additional stiffeners

| GENERAL DRY CARGO SHIPS | Guidelines for Surveys, Assessment and Repair of Hull Structure | |
|---|---|---|
| Part 2 | Fore and aft end regions | Example No. |
| Area 1 | Fore end structure | 6 |
| Detail of damage | Fracture in forecastle deck plating at bulwark | |

**Sketch of damage**

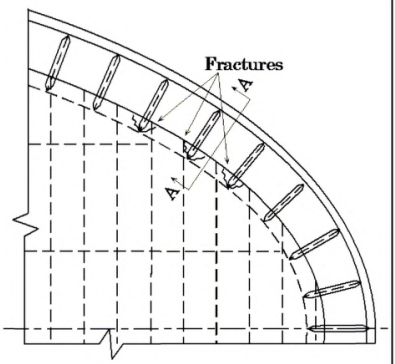


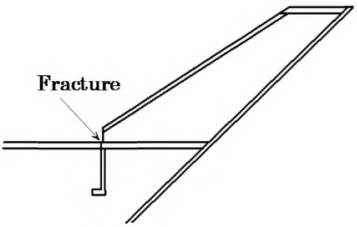


View A-A

**Sketch of repair**

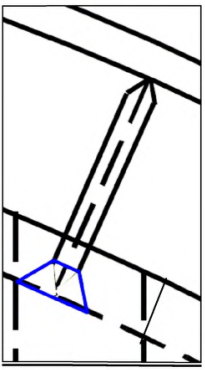

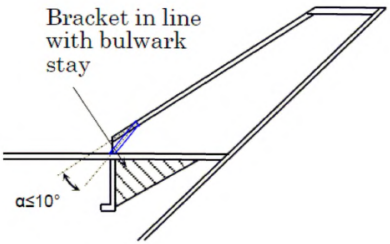


View A-A

| | |
|---|---|
| | 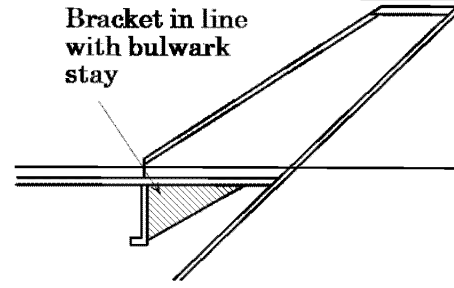 View A-A |
| **Notes on possible cause of damage**<br>1. Bow flare effect in heavy weather.<br>2. Stress concentration due to poor design. | **Notes on repairs**<br>1. Fractured deck plating should be cropped and renewed.<br>2. Bracket in line with the bulwark stay to be fitted to reduce stress concentration.<br>3. The lower end of the bulwark bracket flange to be reshaped in order to avoid the sniper end. |

# Area 2 Aft end structure

## Contents

1 General

2 What to look for
2.1 Material wastage
2.2 Deformations
2.3 Fractures

3 General comments on repair
3.1 Material wastage
3.2 Deformations
3.3 Fractures

| Figures and/or Photographs - Area 2 | |
|---|---|
| No. | Title |
| Figure 1 | Aft end structure - Potential problem areas |

| Examples of structural detail failures and repairs - Area 2 | |
|---|---|
| Example No. | Title |
| 1 | Fractures in longitudinal bulkhead in way of rudder trunk |
| 2 | Fractures at the connection of floors and girder/side brackets |
| 3-a | Fractures in flat where rudder carrier is installed in steering gear room |
| 3-b | Fractures in steering gear foundation brackets and deformed deck plate |
| 3-c | Stern frame, rudder arrangement and propeller shaft support |

# 1 General

**1.1** Due to environmental conditions, wastage of the internal structure of the aft peak tanks can be a major problem for many, and in particular ageing, general dry cargo ships. Wastage may be found to be accelerated in the case of uncoated tanks or where the coating has not been maintained, and can lead to fractures of the internal structure, and the tanks boundaries.

**1.2** Deformation can be caused by contact or due to wave impact from astern which can result in damage to the internal structure and lead to fractures in the shell plating.

**1.3** Fractures to the internal structure in the aft peak tank and spaces can also result from main engine and propeller excited vibration.

# 2 What to look for

## 2.1 Material wastage

**2.1.1** Wastage (and possible subsequent fractures) is more likely to show initially in locations as indicated in **Figure 1**. A close-up inspection should be carried out. In addition, a representative selection of thickness measurements should be taken with particular attention being given to locations such as bunker tank boundaries and spaces adjacent to heated engine rooms.

## 2.2 Deformations

**2.2.1** Contact with quaysides etc. can result in large deformations and fractures of the internal structure. This may affect the watertight integrity of the tank boundaries and bulkheads. A close-up examination of the damaged area should be carried out.

## 2.3 Fractures

**2.3.1** Fractures in floor connection welds and in other locations in the aft peak tanks and rudder trunk spaces are normally found by close-up inspection.

**2.3.2** The structure supporting the rudder carrier may fracture and/or deform due to the rudder having suffered excessive loads. Bolts connecting the rudder carrier to the steering gear flat may also be damaged due to such loads.

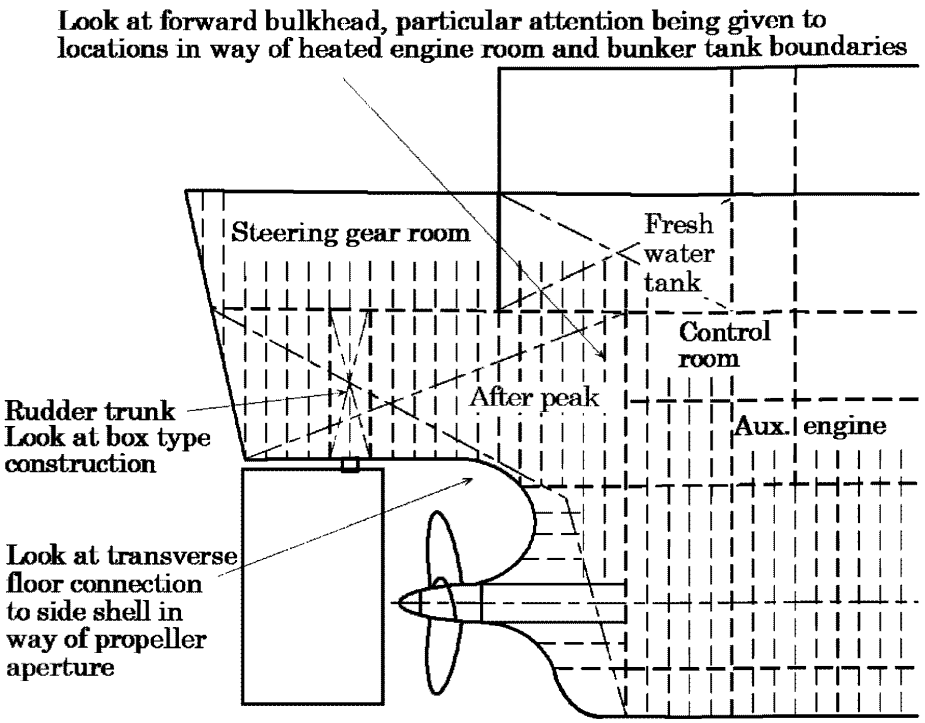


**Figure 1 Aft end structure - Potential problem areas**

# 3 General comments on repair

## 3.1 Material wastage

**3.1.1** The necessary extent of steel renewal can be established when comparing the measured thickness to the original values, or the minimum acceptable values for this part of the structure. The repair work in the peak tanks will require planning to permit accessibility.

## 3.2 Deformations

**3.2.1** Deformed structure caused by contact should be cropped and part renewed or faired in place depending on the extent of damage.

## 3.3 Fractures

**3.3.1** Repairs of main engines and propeller excited vibration damage should be made by returning the structure to its original condition. In order to prevent recurrence of the damage the cause of the vibration should be ascertained and additional reinforcements provided as found necessary (See **Examples 1** and **2**).

**3.3.2** Fractured structure which supports the rudder carrier is to be cropped and renewed, and may have to be reinforced (See **Example 3**).

| GENERAL DRY CARGO SHIPS | Guidelines for Surveys, Assessment and Repair of Hull Structure | |
|---|---|---|
| **Part 2** | **Fore and aft end regions** | **Example No.** |
| **Area 2** | **Aft end structure** | **1** |
| **Detail of damage** | Fractures in longitudinal bulkhead in way of rudder trunk | |

**Sketch of damage**

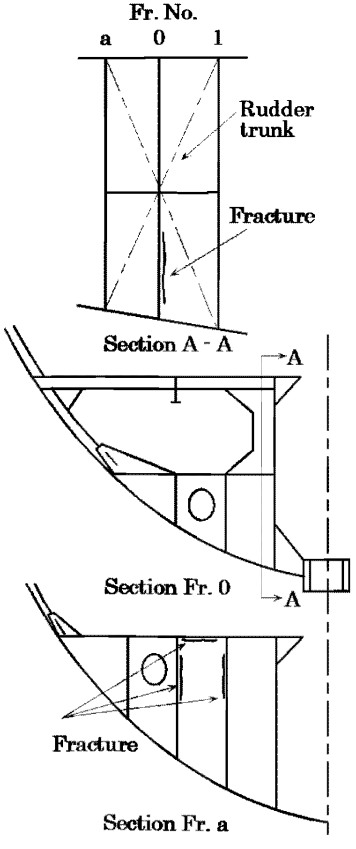


**Sketch of repair**

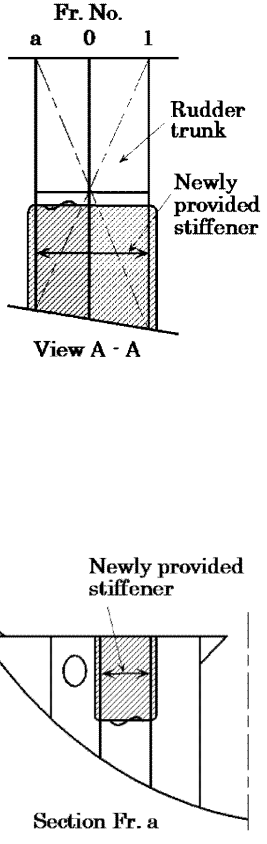


**Notes on possible cause of damage**

1. Vibration.

**Notes on repairs**

1. The fractured plating should be cropped and renewed.
2. Natural frequency of the plate between stiffeners should be changed, e.g. reinforcement by additional stiffeners.

| GENERAL DRY CARGO SHIPS | Guidelines for Surveys, Assessment and Repair of Hull Structure | |
|---|---|---|
| Part 2 | Fore and aft end regions | Example No. |
| Area 2 | Aft end structure | 2 |
| Detail of damage | Fractures at the connection of floors and girders/side brackets | |

**Sketch of damage**

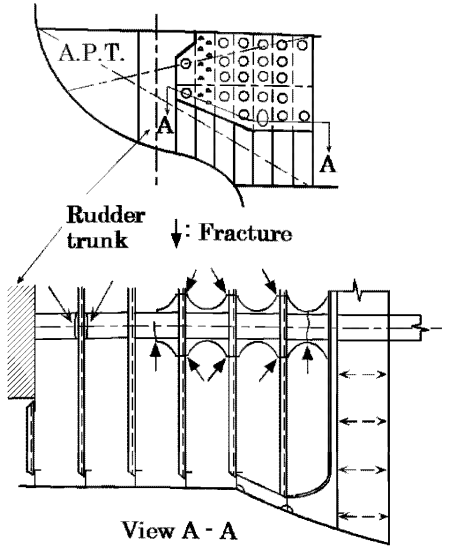


**Sketch of repair**

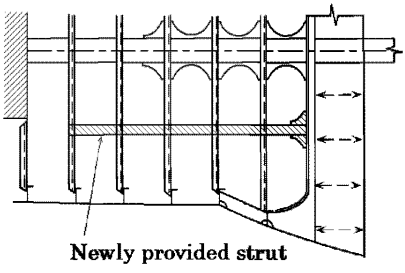


**Notes on possible cause of damage**

1. Vibration.

**Notes on repairs**

1. The fractured plating should be cropped and renewed.
2. Natural frequency of the panel should be changed, e.g. reinforcement by additional strut.

| GENERAL DRY CARGO SHIPS | Guidelines for Surveys, Assessment and Repair of Hull Structure | |
|---|---|---|
| Part 2 | Fore and aft end regions | Example No. |
| Area 2 | Aft end structure | 3-a |
| Detail of damage | Fractures in flat where rudder carrier is installed in steering gear room | |

**Sketch of damage**

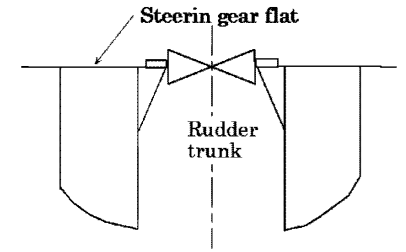


View A - A

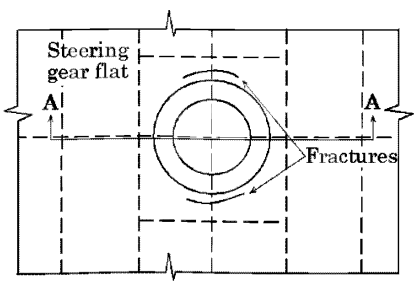


**Sketch of repair**

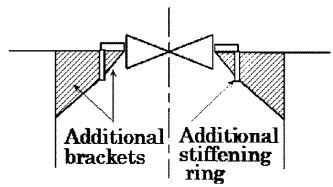


View B - B

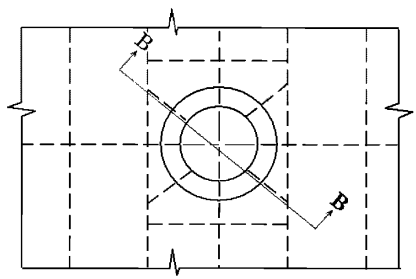

<table>
<tr>
<td></td>
<td>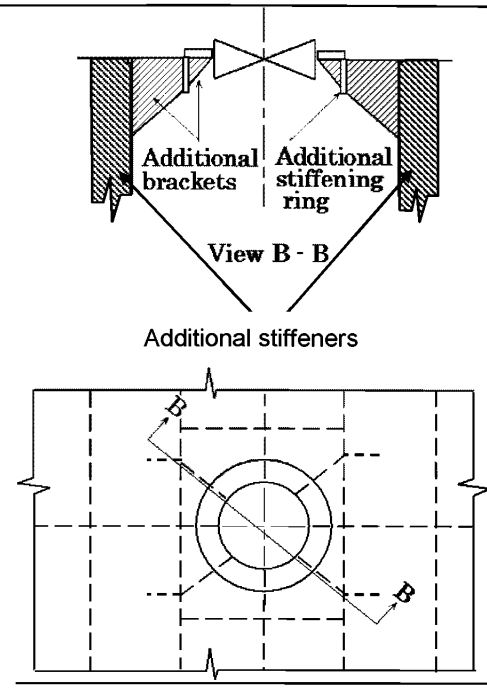
</td>
</tr>
<tr>
<td>Notes on possible cause of damage<br>1. Inadequate design.</td>
<td>Notes on repairs<br>1. Fractured plating should be cropped and renewed.<br>2. Additional brackets, stiffeners and stiffening ring should be fitted for reinforcement.</td>
</tr>
</table>

| GENERAL DRY CARGO SHIPS | Guidelines for Surveys, Assessment and Repair of Hull Structure | |
|---|---|---|
| **Part 2** | **Fore and aft end regions** | **Example No.** |
| **Area 2** | **Aft end structure** | **3-b** |
| **Detail of damage** | Fractures in steering gear foundation brackets and deformed deck plate | |

**Sketch of damage**

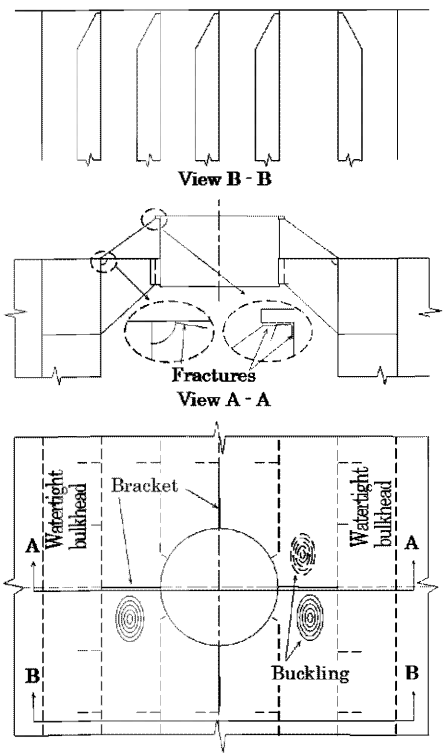


**Sketch of repair**

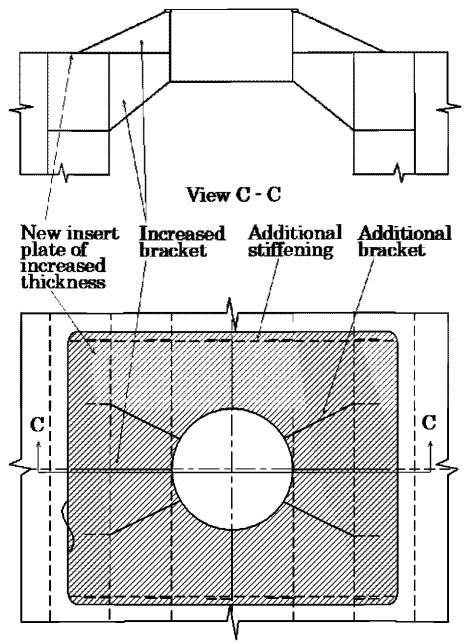


**Notes on possible cause of damage**

1. Insufficient deck strengthening (missing base plate).
2. Insufficient strengthening of steering gear foundation.
3. Bolts of steering gear were not sufficiently pre-loaded.

**Notes on repairs**

1. New insert base plate of increased plate thickness.
2. Additional longitudinal stiffening at base plate edges.
3. Additional foundation brackets above and under deck (star configuration).

| GENERAL DRY CARGO SHIPS | Guidelines for Surveys, Assessment and Repair of Hull Structure | |
|---|---|---|
| Part 2 | Fore and aft end regions | Example No. |
| Area 2 | Aft end structure | 3-c |
| Detail of damage | Stern frame, rudder arrangement and propeller shaft support | |

**Sketch of damage**

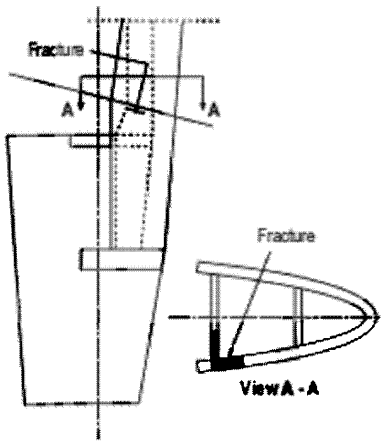


**Sketch of repair**

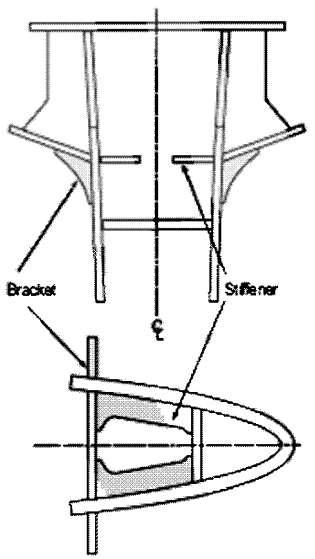


**Notes on possible cause of damage**

1. Insufficient strength due to poor design.

**Notes on repairs**

1. Fractured plating to be veed-out and re-welded.
2. Fractured plating to be cropped and renewed if considered necessary.
3. Reinforcement should be considered if deemed necessary.

# Area 3 Stern frame, rudder arrangement and propeller shaft support

## Contents

1 General

2 What to look for - Drydock inspection
- 2.1 Deformation
- 2.2 Fractures
- 2.3 Corrosion/Erosion/Abrasion

3 General comments on repair
- 3.1 Rudder
- 3.2 Repair of plate structures
- 3.3 Abrasion of bush and sleeve
- 3.4 Assembling of rudders
- 3.5 Repair of propeller boss and stern tube

| Figures and/or Photographs - Area 3 | |
|---|---|
| No. | Title |
| Figure 1 | Nomenclature for stern frame, rudder arrangement and propeller shaft support |
| Figure 2 | Potential problem areas |
| Photograph 1 | Fractured rudder due to corrosion in rudder plating |
| Figure 3 | Rudder stock repair by welding |
| Diagram 1 | Preheating temperature |

| Examples of structural detail failures and repairs - Area 3 | |
|---|---|
| Example No. | Title |
| 1 | Fracture in rudder ~~plate~~ stock |
| 2 | Fracture in connection of palm plate to rudder blade |
| 3 | Fracture in rudder plating of semi-spade rudder (short fracture with end located forward of the vertical web) |
| 4 | Fracture in rudder plating of semi-spade rudder extending beyond the vertical web |
| 5 | Fracture in rudder plating of semi-spade rudder in way of pintle cut-out |
| 6 | Fracture in side shell plating at the connection to propeller boss |
| 7 | Fracture in stern tube at the connection to stern frame |

# 1 General

**1.1** The stern frame, possible strut bearing arrangement and connecting structures are exposed to propeller induced vibrations, which may lead to fatigue cracking in areas where stress concentrations occur.

**1.2** The rudder and rudder horn are exposed to an accelerated and fluctuating stream from the propeller, which may also lead to fatigue cracking in areas where stress concentrations occur.

**1.3** In extreme weather conditions the rudder may suffer wave slamming forces causing deformations of the rudder stock and the rudder horn as well as of the rudder itself.

**1.4** The rudder and the rudder horn as well as struts (on shafting arrangement with strut bearings) may also come in contacts with floating object such as timber-logs or ice, causing damages similar to those described in **1.3**.

**1.5** Since different materials are used in adjacent compartments and structures, accelerated (galvanic) corrosion may occur if protective coating and/or sacrificial anodes are not maintained properly.

**1.6** Pre-existing manufacturing internal defects in cast pieces may lead to fatigue cracking.

**1.7** A summary of potential problem areas is shown in **Figure 2**.

**1.8** A complete survey of the rudder arrangement is only possible in dry dock. However, in some cases a survey including a damage survey can be carried out afloat by divers or with a trimmed ship. (Moved from **2.4**)

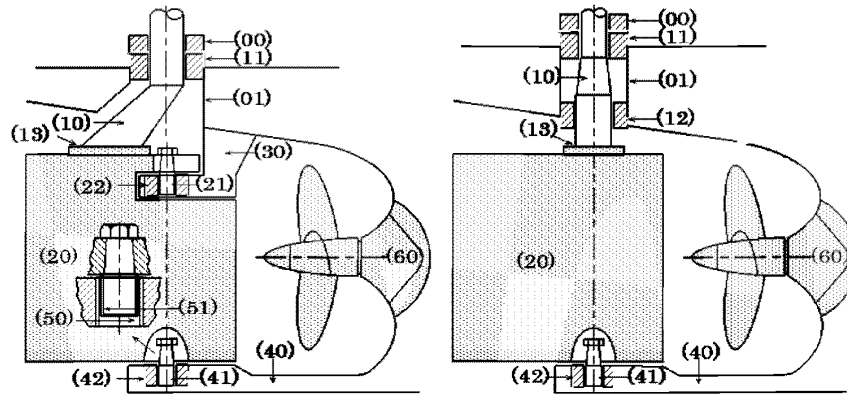


(a) Rudders supported by sole piece

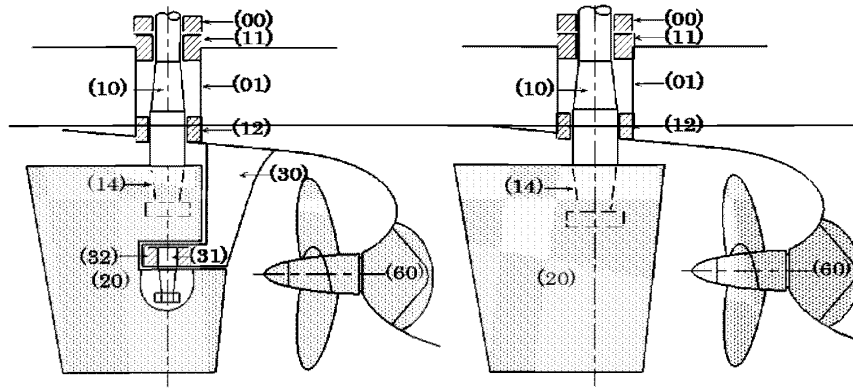


(b) Semi-spade rudder (or Mariner rudder)

(c) Spade rudder

**Nomenclature**

(00) Rudder carrier
(01) Rudder trunk
(10) Rudder stock
(11) Carrier bearing
(12) Neck bearing
(13) Horizontal coupling (Flange coupling)
(14) Cone coupling
(20) Rudder blade
(21) Upper pintle
(22) Upper pintle bearing
(30) Rudder horn
(31) Horn pintle
(32) Horn pintle bearing
(40) Sole piece
(41) Bottom pintle
(42) Bottom pintle bearing
(50) Bush
(51) Sleeve (Liner)
(60) Propeller boss (Stern tube casting)
(70) Propeller shaft bracket (Tail shaft strut)

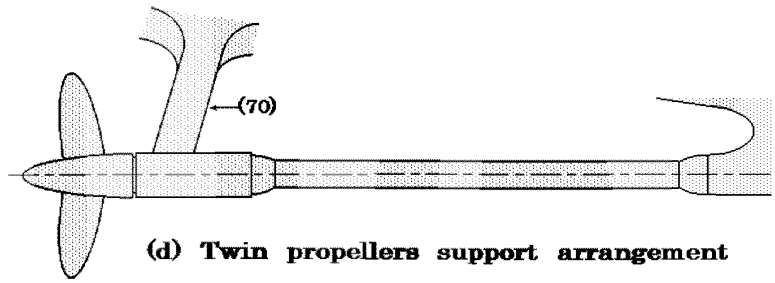


(d) Twin propellers support arrangement

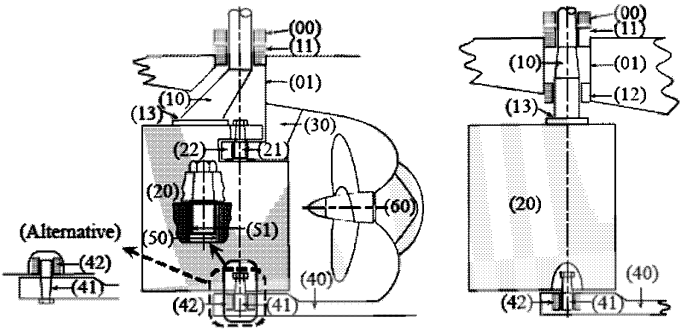


(a) Rudders supported by sole piece

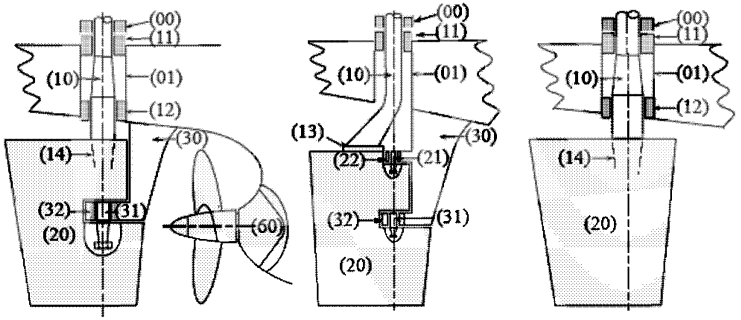


(b) Semi-spade rudders

(c) Spade rudder

**Nomenclature**

(00)Rudder carrier (01)Rudder trunk (10)Rudder stock (11)Carrier bearing
(12)Neck bearing (13)Horizontal coupling(Flange coupling) (14)Cone coupling
(20)Rudder blade (21)Upper pintle (22)Upper pintle bearing
(30)Rudder horn (31)Horn pintle (32)Horn pintle bearing
(40)Sole piece (41)Bottom pintle (42)Bottom pintle bearing
(50)Bush (51)Sleeve(Liner)
(60)Propeller boss(Stern tube casting) (70)Propeller shaft bracket(Tail shaft strut)

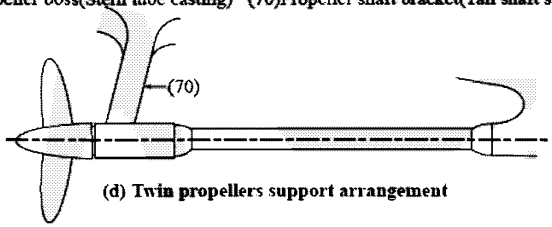


(d) Twin propellers support arrangement

**Figure 1 Nomenclature for stern frame, rudder arrangement and propeller shaft support**

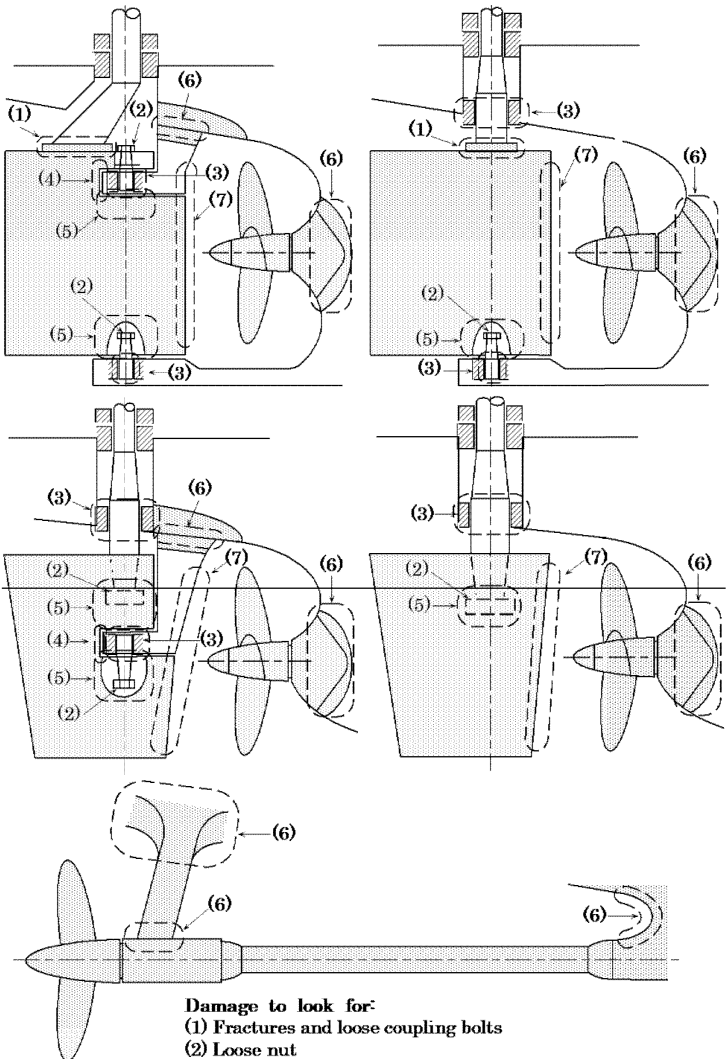


**Damage to look for:**

**(1) Fractures and loose coupling bolts**
**(2) Loose nut**
**(3) Wear (excessive bearing clearance)**
**(4) Fractures in way of pintle cutout**
**(5) Fractures in way of removable access plate**
**(6) Fractures**
**(7) Erosion**

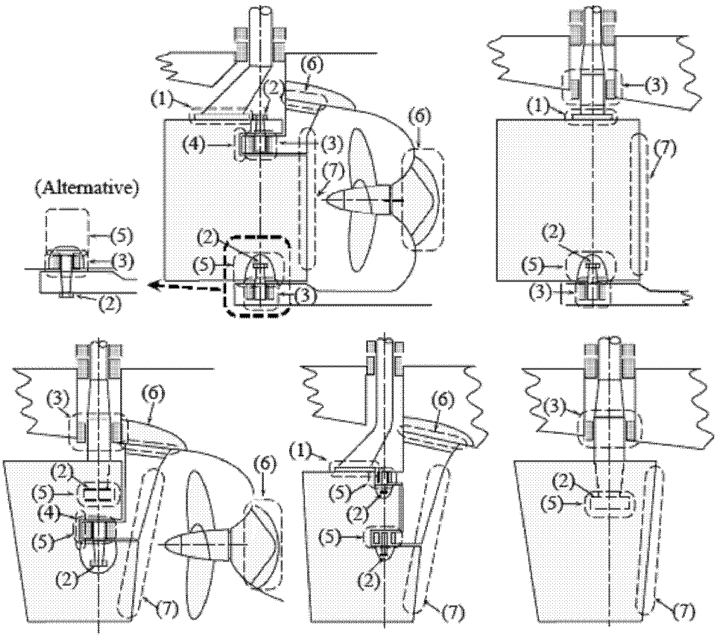


**Damage to look for:**
(1)Fractures and loose coupling bolts
(2)Loose nut
(3)Wear(excessive bearing clearance)
(4)Fractures in way of pintle cutout
(5)Fractures in way of removable access plate
(6)Fractures
(7)Erosion

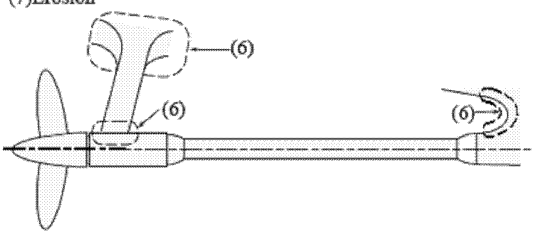


**Figure 2 Potential problem areas**

# 2 What to look for - Drydock inspection

## 2.1 Deformations

**2.1.1** The rudder blade, rudder stock, rudder horn and propeller boss/brackets have to be checked for deformations.

**2.1.2** Indications of deformation of rudder stock/rudder horn could be found by excessive clearance.

**2.1.3** Possible twisting deformation or slipping of cone connection can be observed by the difference in angle between rudder and tiller.

**2.1.4** If bending or twisting deformation is found, the rudder has to be dismounted for further inspection.

## 2.2 Fractures

**2.2.1** Fractures in rudder plating should be looked for at slot welds, welds of removable part to the rudder blade, and welds of the access plate in case of vertical cone coupling between rudder blade and rudder stock and/or pintle. Such welds may have latent defects due to the limited applicable welding procedure. Serious fractures in rudder plating may cause loss of rudder.

**2.2.2** Fractures should be looked for at weld connection between rudder horn, propeller boss and propeller shaft brackets, and stern frame.

**2.2.3** Fractures should be looked for at the upper and lower corners in way of the pintle recess in case of semi-spade rudders. Typical fractures are shown in **Examples 3** to **5**.

**2.2.4** Fractures should be looked for at the transition radius between rudder stock and horizontal coupling (palm) plate, and the connection between horizontal coupling plate and rudder blade in case of horizontal coupling. Typical fractures are shown in **Examples 1** and **2**. Fatigue fractures should be looked for at the palm plate itself in case of loosened or lost coupling bolts.

**2.2.5** Fractures should be looked for in the rudder plating in way of the internal stiffening structures since (resonant) vibrations of the plating may have occurred.

**2.2.6** If the rudder stock is deformed, fractures should be looked for in rudder stock by nondestructive examinations before commencing repair measures, in particular in and around the keyway, if any.

## 2.3 Corrosion/Erosion/Abrasion

**2.3.1 Rudder plating**

Corrosion/erosion (such as deep pitting corrosion) should be looked for in rudder/rudder horn, especially in welds. In extreme cases the corrosion /erosion may cause a large fracture as shown in **Photograph 1**.



~~Photograph 1~~
~~Fractured rudder due to corrosion in rudder plating~~



**Photograph 1 Fractured rudder due to corrosion in rudder plating**

### 2.3.2 Rudder stock and pintle

The following should be looked for on the rudder stock and pintle:

- Excessive clearance between sleeve and bush of the rudder stock/pintle beyond the allowable limit specified by the Classification Society.
- Condition of sleeve. If the sleeve is loose, ingress of water may have caused corrosion.
- Deep pitting corrosion in the rudder stock and pintle adjacent to the stainless steel sleeve.
- Slipping of rudder stock cone coupling. For a vertical cone coupling with hydraulic pressure connection, sliding of the rudder stock cone in the cast piece may cause severe surface damages.
- Where a stainless steel liner/sleeve/cladding for the pintle/rudder stock is fitted into a

stainless steel bush, an additional check should be made for crevice corrosion.

# 3 General comments on repair

## 3.1 Rudder

### 3.1.1 Rudder stock with deformation

(a) If the rudder stock is twisted due to excessive forces such as contact or grounding and has no additional damages (fractures etc.) or other significant deformation, the stock usually can be used. The need for repair or heat treatment of the stock will depend on the amount of twist in the stock according to the requirements of the Classification Society. The keyway, if any, has to be milled in a new position.

(b) Rudder stocks with bending deformations, not having any fractures, may be repaired depending on the size of the deformation either by warm or by cold straightening in an approved workshop according to a procedure approved by the Classification Society. In the case of warm straightening, as a guideline, the temperature should usually not exceed the heat treatment temperature of 530-580°C.

(c) In the case of fractures on a rudder stock with deformations, the stock may be used again depending on the nature and extent of the fractures. If a welding repair is considered acceptable, the fractures are to be removed by machining/grinding and the welding is to be based on an approved welding procedure together with post weld heat treatment as required by the Classification Society.

### 3.1.2 Repair of rudder stocks/pintles by weld cladding

Rudder stocks and/or pintles may be repaired by welding replacing wasted material by similar weld material. After removal of the wasted area (corrosion, scratches, etc.) by machining and/or grinding the build-up welding has to be carried out by an automatic spiral welding according to an approved welding procedure. The welding has to be extended over the area of large bending moments (rudder stocks). In special cases post weld heat treatment has to be carried out according to the requirements of the Classification Society. After final machining, a sufficient number of layers of welding material have to remain on the rudder stock/pintle. A summary of the most important steps and conditions of this repair is shown in the **Figure 3**.

In the case of rudder stocks with bending loads, fatigue fractures in way of the transition radius between the rudder stock and the horizontal coupling plate cannot be repaired by local welding. A new rudder stock with a modified transition geometry has to be manufactured, as a rule (See **Example 1**). In exceptional cases a welding repair can be carried out based on an approved welding procedure. Measures have to be taken to avoid a coincidence of the metallurgical notch of the heat affected zone with the stress concentration in the radius' area. Additional surveys of the repair (including non-destructive fracture examination) have to be carried out at reduced intervals.

**Replacing wasted material by similar ordinary weld material**

- Removal of the wasted area by machining and/or grinding, non-destructive examination for fractures (magnetic particle inspection preferred)
- Build-up welding by automatic spiral welding (turning device) according to an approved welding procedure (weld process, preheating, welding consumables, etc.)
- Extension of build-up welding over the area of **large bending moments** (**shafts**) according to the sketch

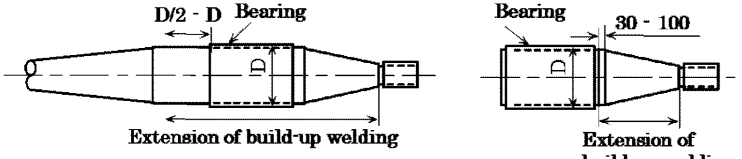


**Rudder stock** **Pintle**

- Sufficient number of weld layers to compensate removed material, at least one layer in excess (heat treatment of the remaining layer)
- Transition at the end of the build-up welding according to the following sketch

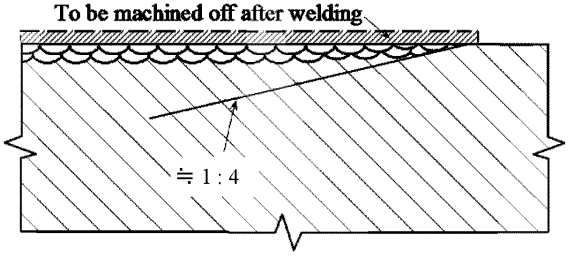


- Post weld heat treatment if required in special cases (never for stainless steel cladding on ordinary steel)
- Final machining, at least two layers of welding material have to remain on the rudder stock (See the above sketch)
- Non-destructive fracture examination

**Figure 3 Rudder stock repair by welding**

## 3.2 Repair of plate structures

**3.2.1** Fatigue fractures in welding seams (butt welds) caused by welding failures (lack of fusion) can be gouged out and rewelded with proper root penetration.

**3.2.2** In case of fractures, probably caused by (resonant) vibration, vibration analysis of the rudder plating has to be performed, and design modifications have to be carried out in order to change the natural frequency of the plate field.

**3.2.3** Short fatigue fractures starting in the lower and/or upper corners of the pintle recess of semi-spade rudders that do not propagate into vertical or horizontal stiffening structures may be repaired by gouging out and welding. This procedure according to **Example 3** should be preferred.

In case of longer fatigue fractures starting in the lower and/or upper corners of the pintle recess of semi-spade rudders that propagate over a longer distance into the plating, thorough check of the internal structures has to be carried out. The fractured parts of the plating and internal structures, if necessary, have to be replaced by insert plates. A proper welding connection between the insert plate and the internal stiffening structure is very important (See **Examples 4** and **5**).

The area of the pintle recess corners has to be ground smooth after the repair. In many cases a modification of the radius, an increased thickness of plating and an enhanced steel quality may be necessary.

**3.2.4** For the fractures at the connection between plating and cast pieces adequate pre-heating is necessary. The pre-heating temperature is to be determined taking into account the following parameters:

- chemical composition (carbon equivalent $C_{eq}$)
- thickness of the structure
- hydrogen content in the welding consumables
- heat input

**3.2.5** As a guide, the preheating temperature can be obtained from **Diagram 1** using the plate thickness and carbon equivalent of the thicker structure.

**3.2.6** All welding repairs are to be carried out using qualified/approved welding procedures.

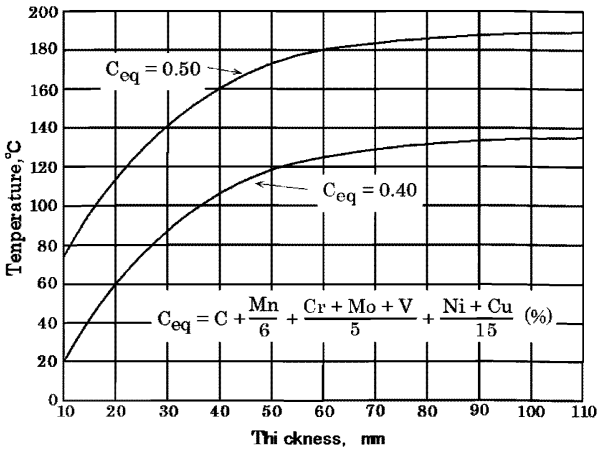


**Diagram 1 Preheating temperature**

## 3.3 Abrasion of bush and sleeve

Abrasion rate depends on the features of the ship such as frequency of maneuvering. However, if excessive clearance is found within a short period, e.g. 5 years, alignment of the rudder arrangement and the matching of the materials for sleeve and bush should be examined together with the replacement of the bush.

## 3.4 Assembling of rudders

After mounting of all parts of the rudder, nuts of rudder stocks with vertical cone coupling and nuts of pintles are to be effectively secured either against each other or both against the coupling plate.

## 3.5 Repair of propeller boss and stern tube

Repair examples for propeller boss and stern tube are shown in **Examples 6** and **7.** Regarding the welding reference is made to **3.1.2**, **3.2.4** and **3.2.5**.

| GENERAL DRY CARGO SHIPS | Guidelines for Surveys, Assessment and Repair of Hull Structure | |
|---|---|---|
| Part 2 | Fore and aft end regions | Example No. |
| Area 3 | Stern frame, rudder arrangement and propeller shaft support | 1 |

**Detail of damage** Fracture in rudder stock

**Sketch of damage**

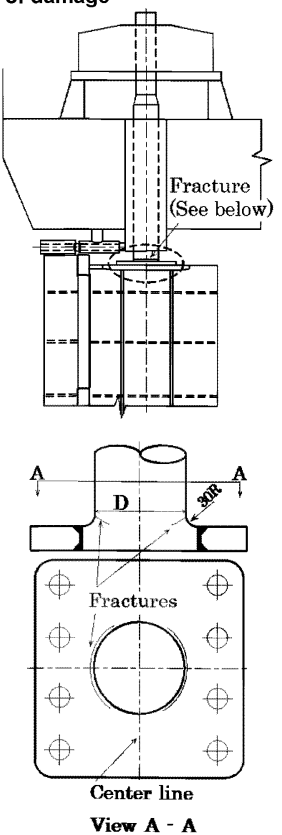


**Sketch of repair**

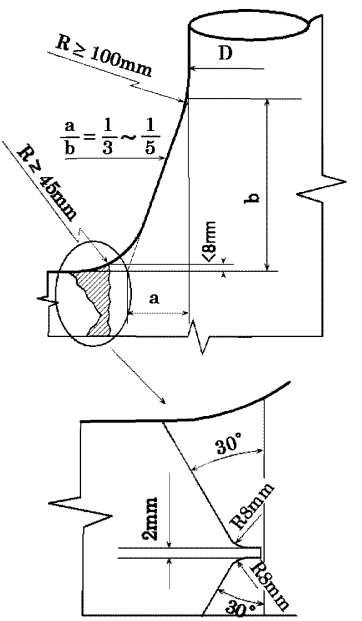


**Notes on possible cause of damage**

1. Inadequate design for stress concentration in rudder stock.

**Notes on repairs**

1. Modification of detail design of rudder stock to reduce the stress concentration.

| GENERAL DRY CARGO SHIPS | Guidelines for Surveys, Assessment and Repair of Hull Structure | |
|---|---|---|
| Part 2 | Fore and aft end regions | Example No. |
| Area 3 | Stern frame, rudder arrangement and propeller shaft support | 2 |
| Detail of damage | Fracture in connection of palm plate to rudder blade | |

**Sketch of damage**

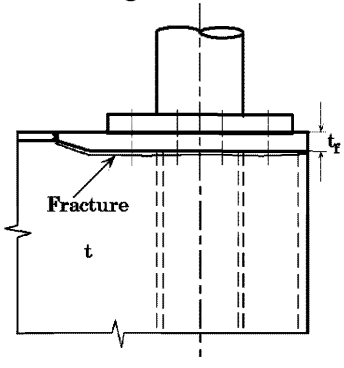


**Sketch of repair**

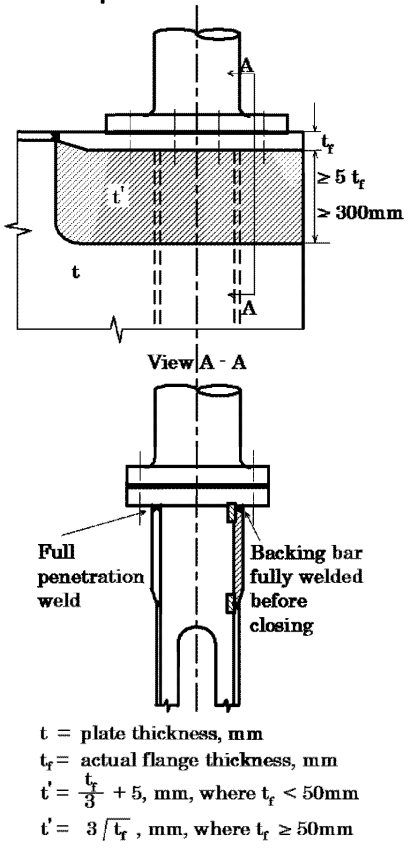


t = plate thickness, mm

$t_f$ = actual flange thickness, mm

$t' = \frac{t_f}{3} + 5$, mm, where $t_f < 50$mm

$t' = 3\sqrt{t_f}$, mm, where $t_f \geq 50$mm

**Notes on possible cause of damage**

1. Inadequate connection between palm plate and rudder blade plating (insufficient plating thickness and/or insufficient fillet weld).

**Notes on repairs**

1. Modification of detail design of the connection by increasing the plate thickness and full penetration welding.

| GENERAL DRY CARGO SHIPS | Guidelines for Surveys, Assessment and Repair of Hull Structure | |
|---|---|---|
| **Part 2** | **Fore and aft end regions** | **Example No.** |
| **Area 3** | **Stern frame, rudder arrangement and propeller shaft support** | **3** |
| **Detail of damage** | Fracture in rudder plating of semi-spade rudder (short fracture with end located forward of the vertical web) | |

**Sketch of damage**

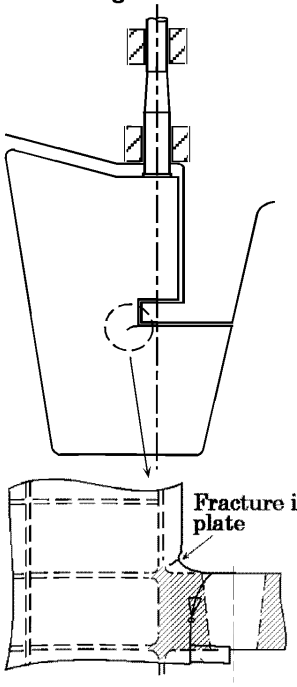


**Sketch of repair**

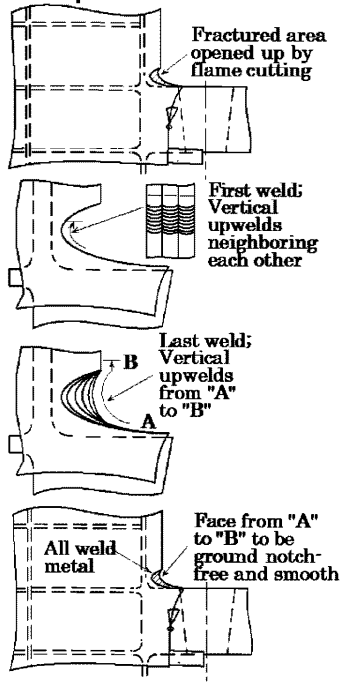


**Notes on possible cause of damage**

1. Stress concentration due to inadequate local design and/or fabrication notches in way of the butt weld between cast piece and plating.

**Notes on repairs**

1. Grooving-out and welding of the fracture is not always adequate (metallurgical notch in way of a high stressed area).
2. In the proposed repair procedure the metallurgical notches are shifted into a zone exposed to lower stresses.
3. After welding a modification of the radius according to the proposal in **Example 5** is to be carried out.
4. In case of very small crack it can be ground off by increasing the radius.

| GENERAL DRY CARGO SHIPS | Guidelines for Surveys, Assessment and Repair of Hull Structure | |
|---|---|---|
| Part 2 | Fore and aft end regions | Example No. |
| Area 3 | Stern frame, rudder arrangement and propeller shaft support | 4 |
| Detail of damage | Fracture in rudder plating of semi-spade rudder extending beyond the vertical web | |

**Sketch of damage**

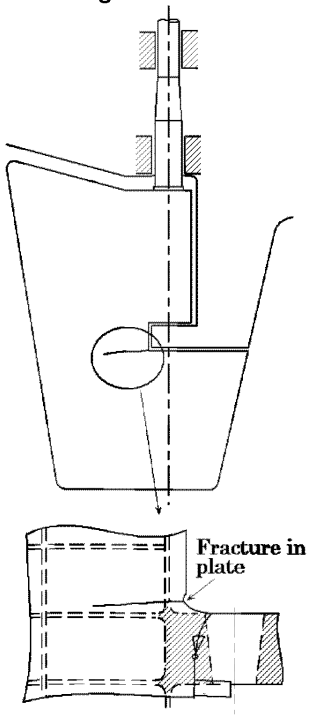


**Sketch of repair**

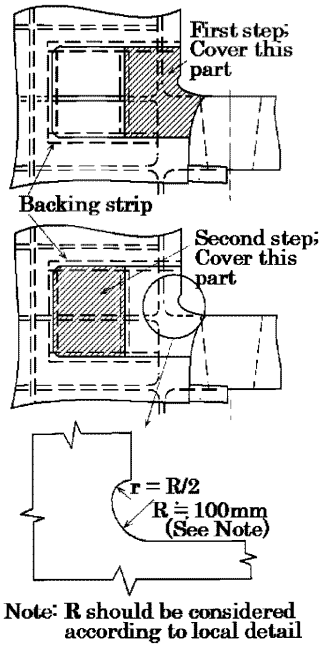


**Notes on possible cause of damage**

1. Stress concentration due to inadequate local design and/or fabrication notches in way of the butt weld between cast piece and plating.

**Notes on repairs**

1. Fractured plating is to be cut-out.
2. Internal structures are to be checked.
3. Cut-out is to be closed by an insert plating according to the sketch (welding only from one side is demonstrated).
4. Modification of the radius.
5. In case of a new cast piece, connection with the plating is to be shifted outside the high stress area.

| GENERAL DRY CARGO SHIPS | Guidelines for Surveys, Assessment and Repair of Hull Structure | |
|---|---|---|
| Part 2 | Fore and aft end regions | Example No. |
| Area 3 | Stern frame, rudder arrangement and propeller shaft support | 5 |
| Detail of damage | Fracture in rudder plating of semi-spade rudder in way of pintle cutout | |

**Sketch of damage**

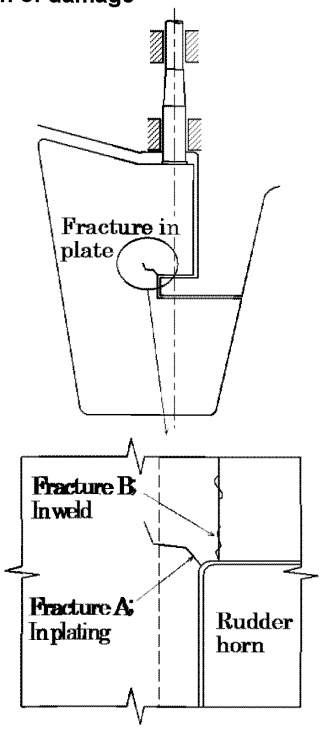


**Sketch of repair**

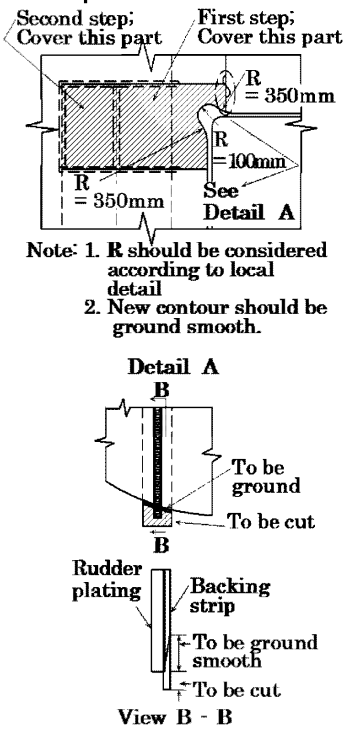


**Notes on possible cause of damage**

1. Inadequate design for stress concentration in way of pintle bearing (**Fracture A**).
2. Imperfection in welding seam (**Fracture B**).

**Notes on repairs**

1. Fractured part to be cropped off.
2. Repair by two insert plates of modified, stress releasing contour. For the vertical seam no backing strip is used 100mm off contour, welding from both sides, to be ground after welding.
3. Variant (See **Detail A**): Repair as mentioned under 2 with the use of backing strip for the ~~compete~~ complete vertical seam. After welding backing strip partly removed by grinding.

| GENERAL DRY CARGO SHIPS | Guidelines for Surveys, Assessment and Repair of Hull Structure | |
|---|---|---|
| Part 2 | Fore and aft end regions | Example No. |
| Area 3 | Stern frame, rudder arrangement and propeller shaft support | 6 |
| Detail of damage | Fracture in side shell plating at the connection to propeller boss | |

**Sketch of damage**

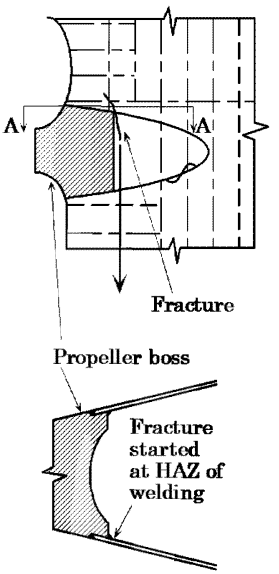


Enlarged View A - A

**Sketch of repair**

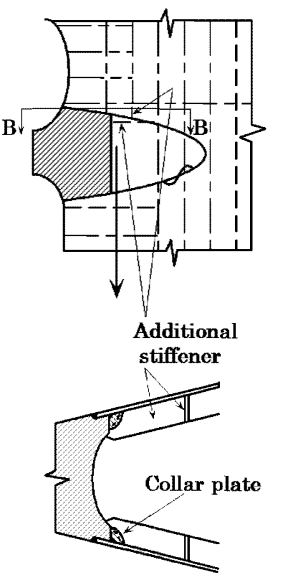


Enlarged View B - B

**Notes on possible cause of damage**

1. Fatigue fracture due to vibration.

**Notes on repairs**

1. Fractured side shell plating is to be cropped and part renewed.
2. Additional stiffeners are to be provided.
3. Collar plate is to be provided.

| GENERAL DRY CARGO SHIPS | Guidelines for Surveys, Assessment and Repair of Hull Structure | |
|---|---|---|
| Part 2 | Fore and aft end regions | Example No. |
| Area 3 | Stern frame, rudder arrangement and propeller shaft support | 7 |
| Detail of damage | Fracture in stern tube at the connection to stern frame | |

**Sketch of damage**

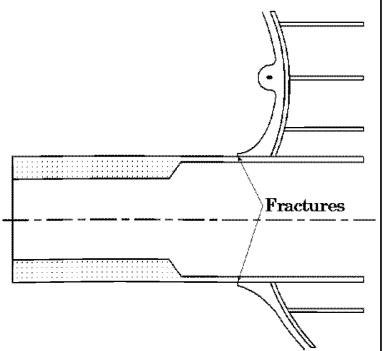


**Sketch of repair**

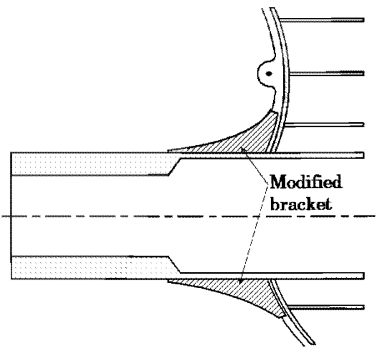


**Notes on possible cause of damage**

1. Fatigue fracture due to vibration.

**Notes on repairs**

1. Fractured tube is to be welded from both sides.
2. Brackets are to be replaced by modified brackets with soft transition.

# Part 3 Machinery and accommodation spaces

## Area 1 Engine room structure
## Area 2 Accommodation structure

---

## Area 1 Engine room structure

## Contents

1 General

2 What to look for
2.1 Material wastage
2.2 Fractures

3 General comments on repair
3.1 Fractures

| Examples of structural detail failures and repairs - Area 1 | |
|---|---|
| Example No. | Title |
| 1 | Fractures in brackets at main engine foundation |
| 2 | Corrosion in bottom plating under sounding pipe in way of bilge storage tank in engine room |
| 3 | Corrosion in bottom plating under inlet/suction pipe in way of bilge storage tank in engine room |

# 1 General

**1.1** The engine room structure is categorized as follows.

- Boundary structure which consists of upper deck, bulkhead, inner bottom plating, funnel, deckhead below accommodation wet areas etc.
- Deep tank structure
- Double bottom tank structure

The boundary structure can generally be inspected routinely. Therefore, if damage is found, it can be easily rectified. Other structures, however, cannot be inspected routinely and therefore damage is found only when the ship is dry-docked or a problem has occurred.

# 2 What to look for

## 2.1 Material wastage

### 2.1.1 Boundary structure

Tank top plating, shell plating and bulkhead plating adjacent to the tank top plating may have severe corrosion due to sea water which is derived from leakage or lack of maintenance of sea water lines.

In dry dock the bilge well should be cleaned and inspected carefully, because the bilge well may have heavy pitting corrosion due to sea water which is derived from leakage at the gland packing or maintenance operation of machinery.

The funnel consists of part of the boundary structure and it often has serious corrosion which may impair firefighting of engine room in addition to weather tightness.

### 2.1.2 Double bottom tank

The bilge tank is under relatively severe corrosion environment compared to other double bottom tanks, since oily bilge containing sea water is put into the tank. Severe corrosion may result in a hole in the bottom plating, especially under the sounding pipe. In cofferdam pitting corrosion caused by sea water entering from the air pipe is seldom found.

## 2.2 Fractures

### 2.2.1 Deep tank

In general deep tanks for fresh water or fuel oil are provided in the engine room. These tank structures often have fractures due to vibration. Since the double bottom structure in the engine room is extremly rigid, fractures in this structure are very rare.

# 3 General comments on repair

## 3.1 Fractures

### 3.1.1 Deep tank

For fractures caused by vibration, consideration should be paid to change the natural frequency of the structure in addition to repairing damage to the structure. This may be achieved by adding proper additional structural members. However, this is often very difficult and many tentative tests may be needed before reaching the desired solution.

| GENERAL DRY CARGO SHIPS | Guidelines for Surveys, Assessment and Repair of Hull Structure | |
|---|---|---|
| Part 3 | Machinery and accommodation spaces | Example No. |
| Area 1 | Engine room structure | 1 |
| Detail of damage | Fractures in brackets at main engine foundation | |

**Sketch of damage**

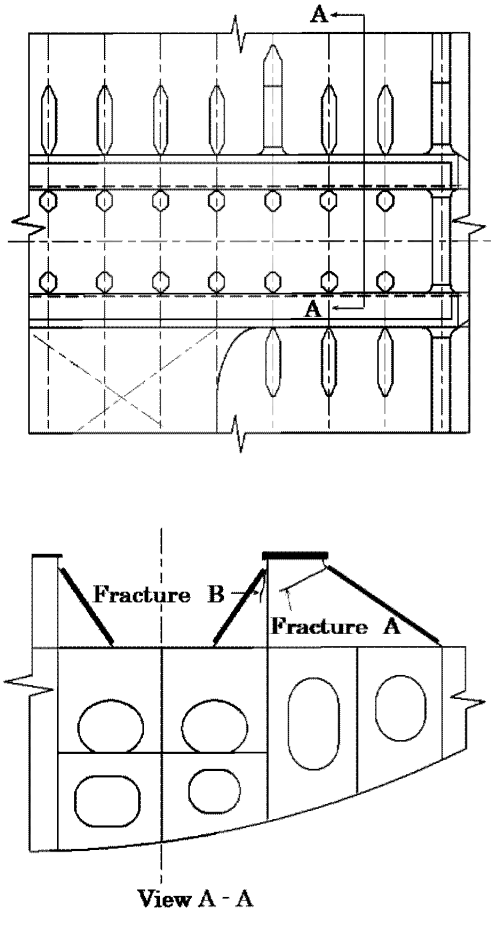


**Sketch of repair**

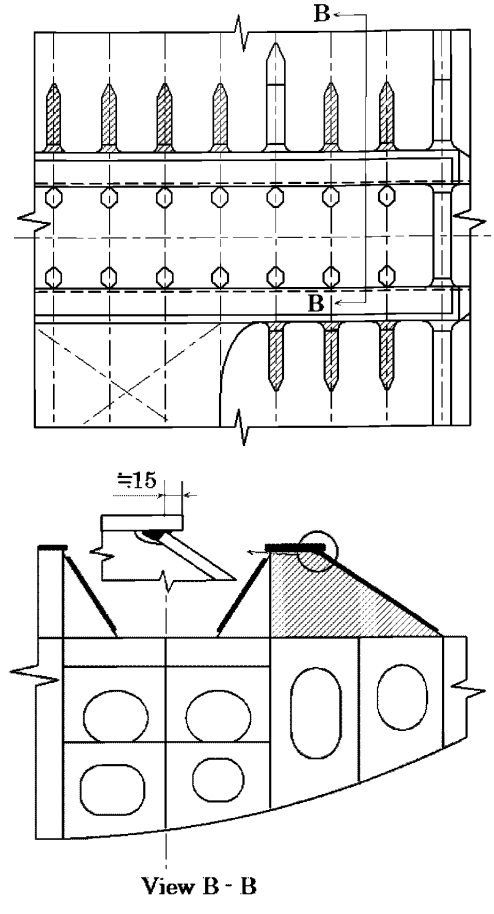


**Notes on possible cause of damage**

1. Vibration of main engine.
2. Insufficient strength of brackets at main engine foundation.
3. Insufficient pre-load of the bolts.

**Notes on repairs**

1. Fractures may be veed-out and rewelded.
2. New modified brackets at main engine foundation.
   Or insert pieces and additional flanges to increase section modulus of the brackets.

| GENERAL DRY CARGO SHIPS | Guidelines for Surveys, Assessment and Repair of Hull Structure | |
|---|---|---|
| Part 3 | Machinery and accommodation spaces | Example No. |
| Area 1 | Engine room structure | 2 |
| Detail of damage | Corrosion in bottom plating under sounding pipe in way of bilge storage tank in engine room | |

**Sketch of damage**

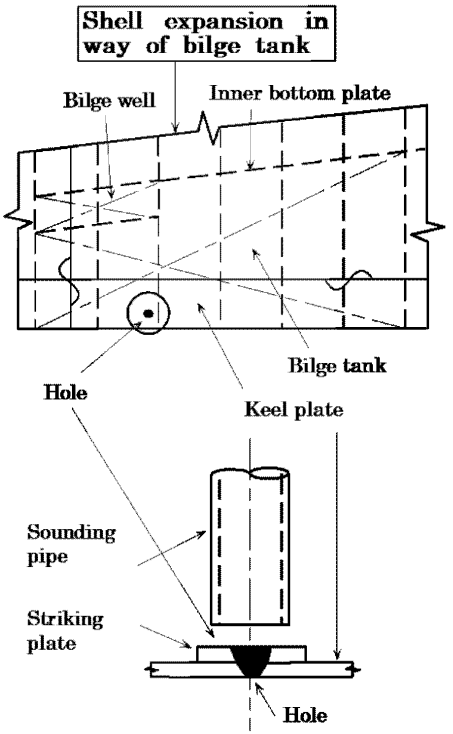


**Sketch of repair**

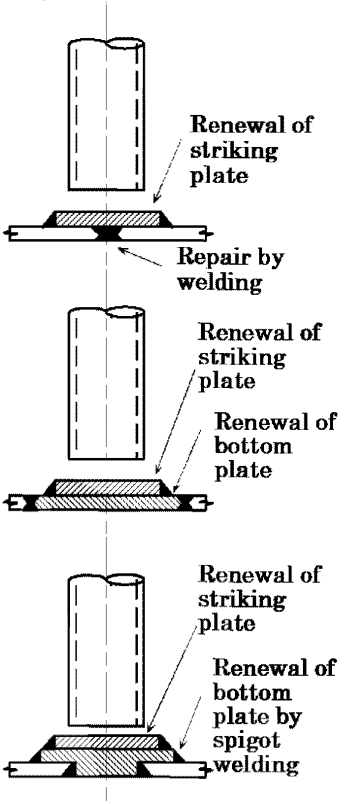


**Notes on possible cause of damage**

1. Heavy corrosion of bottom plating under sounding pipe.

**Notes on repairs**

1. Corroded striking plating should be renewed. Bottom plate should be repaired depending
2. on the condition of corrosion.
   (Note)
   Repair by spigot welding can be applied to the structure only when the stress level is considerably low. Generally this procedure cannot be applied to the repair of bottom plating of ballast tanks in cargo hold region.

| GENERAL DRY CARGO SHIPS | Guidelines for Surveys, Assessment and Repair of Hull Structure | |
|---|---|---|
| Part 3 | Machinery and accommodation spaces | Example No. |
| Area 1 | Engine room structure | 3 |
| Detail of damage | Corrosion in bottom plating under inlet/suction/pipe in way of bilge storage tank in engine room | |

**Sketch of damage**

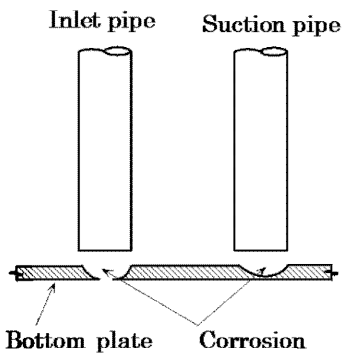


**Sketch of repair**

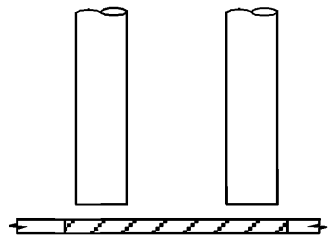

**Notes on possible cause of damage**

1. Heavy corrosion of bottom plating under the inlet/suction pipe.

**Notes on repairs**

1. Corroded bottom plate is to be cropped and part renewed. Thicker plate is preferable.
2. Replacement of pipe end by enlarged conical opening (similar to suction head in ballast tank) is preferable.

# Area 2 Accommodation structure

## Contents

### 1 General/General comments to repair

| Figures and/or Photographs - Area ~~1~~2 | |
|---|---|
| No. | Title |
| Photograph 1 | Corroded accommodation house structure |

# 1 General/General comments to repair

## 1.1 General

Generally accommodation structures have few damages compared to other structures due to low stress levels.

The main damage is corrosion which may cause serious problems since the structure is relatively thin. Serious corrosion may be found in exposed deck plating and its adjoining accommodation house structure where water is liable to collect (See **Photograph 1**). Corrosion is also found in accommodation bulkheads where fittings such as doors, side scuttles, ventilators, etc. are fitted and proper maintenance of the area is relatively difficult. Deterioration of the bulkheads including fittings may impair the integrity of weathertightness.

Fractures caused by vibration may be found, in the structure itself and in various stays for such structures, mast, antenna etc. For such fractures consideration should be paid to change the natural frequency of the structure in addition to the repair.



**Photograph 1 Corroded accommodation house structure**



©IACS

International Association of

Classification Societies 1999

End of Document

gost.e-ecolog.ru