РОССИЙСКИЙ МОРСКОЙ РЕГИСТР СУДОХОДСТВА
RUSSIAN MARITIME REGISTER OF SHIPPING



ПРИЛОЖЕНИЕ К ПРАВИЛАМ И РУКОВОДСТВАМ
РОССИЙСКОГО МОРСКОГО РЕГИСТРА СУДОХОДСТВА

ПРОЦЕДУРНЫЕ ТРЕБОВАНИЯ, УНИФИЦИРОВАННЫЕ ИНТЕРПРЕТАЦИИ И РЕКОМЕНДАЦИИ МЕЖДУНАРОДНОЙ АССОЦИАЦИИ КЛАССИФИКАЦИОННЫХ ОБЩЕСТВ

SUPPLEMENT TO RULES AND GUIDELINES
OF RUSSIAN MARITIME REGISTER OF SHIPPING

IACS PROCEDURAL REQUIREMENTS, UNIFIED INTERPRETATIONS AND RECOMMENDATIONS

НД № 2-020101-091-R-E

2016

gost.e-ecolog.ru

Настоящее Приложение к правилам и руководствам Российского морского регистра судоходства содержит обязательные для применения процедурные требования и унифицированные интерпретации Международной ассоциации классификационных обществ (МАКО), а также рекомендации МАКО, ссылки на которые имеются в правилах и других нормативных документах Регистра.

Все материалы публикуются на английском языке.

Данный документ публикуется в электронном виде отдельным изданием и является обязательным Приложением к правилам Регистра.

The present Supplement to rules and guidelines of Russian Maritime Register of Shipping contains IACS Procedural Requirements and IACS Unified Interpretations compulsory for implementation, and IACS recommendations, which are referred to in the rules and other normative documents of the Register.

All materials are published in English.

The present document is published in electronic format as a separate edition and is a compulsory Supplement to the Register rules.

СОДЕРЖАНИЕ
CONTENTS

Процедурные требования МАКО
IACS Procedural Requirements

Номер документа Document number	Название документа Document name	Примечание Note
1. PR No. 38 (May 2013)	Procedure for calculation and verification of the Energy Efficiency Design Index (EEDI)	Document is applied from 1 July 2013

Применение: Руководство по применению положений международной конвенции МАРПОЛ 73/78, часть VI, пункт 2.6.16.
Application: Guidelines on the Application of Provisions of the International Convention MARPOL 73/78, part VI, para 2.6.16.

Унифицированные интерпретации МАКО
IACS Unified Interpretations

Номер документа Document number	Название документа Document name	Примечание Note
1. SC 191 (Rev.7 Jan 2015)	IACS Unified Interpretations (UI) SC 191 for the application of amended SOLAS regulation II-1/3-6 (resolution MSC.151(78)) and revised Technical provisions for means of access for Inspections (resolution MSC.158(78))	Document is applied from 1 July 2016

Применение: Правила классификации и постройки морских судов (2016), часть III, пункт 7.14.2.
Application: Rules for the Classification and Construction of Sea-Going Ships (2016), Part III, para 7.14.2.

2. SC 226 (Rev.1 Dec 2012)	IACS Unified Interpretations (UI) on the application of SOLAS regulations to conversions of Single-Hull Oil Tankers to Double-Hull Oil Tankers or Bulk Carriers	Document is applied from 1 January 2014

Применение: Правила классификации и постройки морских судов (2016), часть I, пункт 3.1.3.
Application: Rules for the Classification and Construction of Sea-Going Ships (2016), Part I, para 3.1.3.

3. SC 234 (Rev.2 Dec 2014), LL 76 (Rev.2 Dec 2014), MPC 96 (Rev.2 Dec 2014)	Initial Statutory Surveys at New Construction	Document is applied from 1 July 2015

Применение: Правила технического наблюдения за постройкой судов и изготовлением материалов и изделий для судов, часть V, пункт 19.1.7.
Application: Rules for Technical Supervision during Construction of Ships and Manufacture of Materials and Products for Ships, Part V, para 19.1.7.

4. SC 244 (Rev.1 Nov 2012) (Corr.1 Nov 2015)	Load testing of hooks for primary release of lifeboats and rescue boats	Document is applied from 1 January 2014

Применение: Правила по оборудованию морских судов (2016), часть II, пункт 1.3.2.1.
Application: Rules for the Equipment of Sea-Going Ships (2016), Part II, para 1.3.2.1.

5. SC 249 (Rev.1 Feb 2013)	Implementation of SOLAS II-1, Regulation 3-5 and MSC.1/Circ.1379	Document is applied from 1 July 2013

Применение: Правила технического наблюдения за постройкой судов и изготовлением материалов и изделий для судов, часть V, пункт 19.1.7.
Application: Rules for Technical Supervision during Construction of Ships and Manufacture of Materials and Products for Ships, Part V, para 19.1.7.

6. MPC2 (Rev. 1 Aug 2015) — Operational manuals for oil discharge monitoring and control systems — Document is applied from 1 July 2016

Применение: Правила технического наблюдения за постройкой судов и изготовлением материалов и изделий для судов, часть V, пункт 19.7.2.1.

Application: Rules for Technical Supervision during Construction of Ships and Manufacture of Materials and Products for Ships, Part V, para 19.7.2.1.

7. MPC6 (Rev. 1 Aug 2015) — Calculation of aggregate capacity of SBT — Document is applied from 1 July 2016

Применение: Руководство по применению положений международной конвенции МАРПОЛ 73/78, часть II, пункт 3.5.1.1.

Application: Guidelines on the Application of Provisions of the International Convention MARPOL 73/78, part VI, para 3.5.1.1.

Рекомендации МАКО
IACS Recommendations

Номер документа Document number	Название документа Document name

1. Rec. No. 47 (Rev.7 June 2013) — Shipbuilding and Repair Quality Standard

Применение: Правила классификационных освидетельствований судов в эксплуатации (2016), часть I (пункт 5.13), приложение 2 (пункт 5.1.12), приложение 3 (пункт 7).
Правила технического наблюдения за постройкой судов и изготовлением материалов и изделий для судов, часть I, приложение 3 (пункт 7.4)

Application: Rules for the Classification Surveys of Ships in Service (2016), Part I (para 5.13), Appendix 2 (para 5.1.12), Appendix 3 (para 7).
Rules for Technical Supervision during Construction of Ships and Manufacture of Materials and Products for Ships, Part I, Appendix 3 (para 7.4)

2. Rec. No. 76 (Corr.1 Sept 2007) — IACS Guidelines for Surveys, Assessment and Repair of Hull Structure – Bulk Carriers

Применение: Правила классификационных освидетельствований судов в эксплуатации (2016), часть I (пункт 5.13), приложение 2 (пункт 5.1.12), приложение 3 (пункт 2).

Application: Rules for the Classification Surveys of Ships in Service (2016), Part I (para 5.13), Appendix 2 (para 5.1.12), Appendix 3 (para 2).

3. Rec. No. 96 (April 2007) — Double Hull Oil Tankers – Guidelines for Surveys, Assessment and Repair of Hull Structures

Применение: Правила классификационных освидетельствований судов в эксплуатации (2016), часть I (пункт 5.13), приложение 2 (пункт 5.1.12), приложение 3 (пункт 10).

Application: Rules for the Classification Surveys of Ships in Service (2016), Part I (para 5.13), Appendix 2 (para 5.1.12), Appendix 3 (para 10).

4. Rec. No. 132 (Dec 2013) — Human Element Recommendations for structural design of lighting, ventilation, vibration, noise, access & egress arrangements

Применение: Руководство по освидетельствованию условий труда и отдыха моряков на соответствие требованиям Конвенции 2006 года о труде в морском судоходстве (2013), пункты 2.21, 4.7.2.
Руководство по освидетельствованию жилых помещений экипажа (2013), пункты 2.14, 4.1.2.7.

Application: Guidelines on On-board Maritime Labour Convention, 2006 (MLC) Inspection (2013), paras 2.21, 4.7.2.
Guidelines on On-board Inspection for Crew Accomodation (2013), paras 2.14, 4.1.2.7.

5. Rec. No. 55 (March 1999) — General Cargo Ships – Guidance for Surveys, Assessment and Repair of Hull Structure

Применение: Правила классификационных освидетельствований судов в эксплуатации (2016), часть I (пункт 5.13), приложение 2 (пункт 5.1.12), приложение 3 (пункт 6).

Application: Rules for the Classification Surveys of Ships in Service (2016), Part I (para 5.13), Appendix 2 (para 5.1.12), Appendix 3 (para 6).

ПРОЦЕДУРНЫЕ ТРЕБОВАНИЯ МАКО

IACS PROCEDURAL REQUIREMENTS

No. 38 (May 2013) Procedure for calculation and verification of the Energy Efficiency Design Index (EEDI)

Introduction

This procedure applies to all cases of Class Societies' involvement in conducting the survey and certification of EEDI in accordance with regulations 5, 6, 7, 8 and 9 of MARPOL Annex VI as a Verifier defined in the *"2012 Guidelines on Survey and Certification of the Energy Efficiency Design Index (EEDI)"* IMO Resolution MEPC 214(63).

1 Definition

"Industry Guidelines" means the Industry Guidelines for calculation and verification of the Energy Efficiency Design Index (EEDI) as first submitted to MEPC 64 that may be revised in order to remain in line with the relevant IMO Guidelines MEPC.212(63) and MEPC.214(63).

2 Scope of the Procedure

The scope of this procedure is defined in Part I of the Industry Guidelines and corresponds to the calculation and verification of EEDI of cargoships, without considering innovative energy efficient technologies, contracted for construction after 1 July 2013.

3 Calculation of EEDI

The procedure to compute the EEDI is documented in Part II of the Industry Guidelines. For the purpose of this Procedural Requirement, calculation of the EEDI is to be performed in accordance with IMO Guidelines MEPC.212(63) and Part II of the Industry Guidelines, as amended.

4 Verification of EEDI

The procedure to verify the EEDI is documented in Part III of the Industry Guidelines, together with Appendixes 1, 3, 4 and 5. For the purpose of this Procedural Requirement, verification of the EEDI is to be performed in accordance with IMO Guidelines MEPC.214(63) and Part III of the Industry Guidelines, as amended.
A sample of document to be submitted to the Verifier including additional information for verification is provided in Appendix 2 of the Industry Guidelines.

Attached:

First Industry Guidelines for calculation and verification of the Energy Efficiency Design Index (EEDI)

Note:

1. This Procedural Requirement applies from 1 July 2013.

2. The "contracted for construction" date means the date on which the contract to build the vessel is signed between the prospective owner and the shipbuilder. For further details regarding the date of "contract for construction", refer to IACS Procedural Requirement (PR) No. 29.

End of Document

FIRST INDUSTRY GUIDELINES FOR CALCULATION AND VERIFICATION OF THE ENERGY EFFICIENCY DESIGN INDEX (EEDI)

TABLE OF CONTENTS

1 Scope of the Guidelines 2
2 Introduction 3
3 EEDI formula 3
4 Fuel consumption and CO_2 emission 3
5 Capacity, power and speed 4
6 Shaft generator and shaft motor 5
7 Weather factor f_w 10
8 Correction factor for ship specific design elements f_j 10
9 Capacity factor f_i 10
10 Cubic capacity correction factor fc 11
11 Innovative energy efficient technologies 11
12 Example of calculation 11
13 Verification process 13
14 Documents to be submitted 13
15 Preliminary verification at the design stage 14
16 Final verification at sea trial 19
17 Verification of the EEDI in case of major conversion 21
18 Appendix 1: Review and witness points 22
19 Appendix 2: Sample of documents to be submitted to the verifier 24
20 Appendix 3: Verifying the calibration of model test equipment 38
21 Appendix 4: Review and witnessing of model test procedures 44
22 Appendix 5: Sample Report "Preliminary Verification of EEDI" 52

Part I - Scope of the Industry Guidelines

1 SCOPE OF THE GUIDELINES

1.1 Objective

The objective of these Industry Guidelines for calculation and verification of the Energy Efficiency Design Index (EEDI), hereafter designated as "the Industry Guidelines", is to provide details and examples of calculation of attained EEDI and to support the method and role of the verifier in charge of conducting the survey and certification of EEDI in compliance with the two following IMO Guidelines:

- 2012 Guidelines on the method of calculation of EEDI for new ships, Res. MEPC.212(63) adopted on 2 March 2012, referred to as the "IMO Calculation Guidelines" in the present document
- 2012 Guidelines on survey and certification of EEDI, Res. MEPC.214(63) adopted on 2 March 2012, referred to as the "IMO Verification Guidelines" in the present document

In the event that the IMO Guidelines are amended, then pending amendment of these Industry Guidelines, they are to be implemented in compliance with the amended IMO Guidelines.

1.2 Application

These Guidelines apply to new ships as defined in Regulation 2.23 of MARPOL Annex VI of 400 gross tonnage and above. The calculation and verification of EEDI are to be performed for each:

1. new ship before ship delivery
2. new ship in service which has undergone a major conversion
3. new or existing ship which has undergone a major conversion that is so extensive that the ship is regarded by the Administration as a newly constructed ship

The Industry Guidelines shall not apply to ships which have diesel-electric propulsion, turbine propulsion or hybrid propulsion systems.

1.3 Limited scope of the first issue of Industry Guidelines

This issue of the Industry Guidelines only applies to the following types of ships:

- Bulk carriers
- Gas carriers
- Tankers
- Containerships
- General cargo ships
- Refrigerated cargo carriers
- Combination carriers

which are not fitted with innovative energy efficient technologies.

The first issue of this document doesn't consider the EEDI verification after a major conversion. Guidelines on this subject will be developed subsequent to IMO's adoption of an interpretation of the definition of major conversion.

Part II - Explanatory notes on calculation of EEDI

2 INTRODUCTION

The attained Energy Efficiency Design Index (EEDI) is a measure of a ship's energy efficiency determined as follows:

$$EEDI = \frac{CO_2\ emission}{Transport\ work}$$

The CO_2 emission is computed from the fuel consumption taking into account the carbon content of the fuel. The fuel consumption is based on the power used for propulsion and auxiliary power measured at defined design conditions.

The transport work is estimated by the designed ship capacity multiplied by the ship's speed measured at the maximum summer load draught and at 75 per cent of the rated installed power.

3 EEDI FORMULA

The EEDI is provided by the following formula:

$$\frac{(\prod_{j=1}^{n} f_j).(\sum_{i=1}^{nME} P_{ME(i)}.C_{FME(i)}.SFC_{ME(i)}) + P_{AE}.C_{FAE}.SFC_{AE} + \{(\prod_{j=1}^{n} f_j).\sum_{i=1}^{nPTI} P_{PTI(i)} - \sum_{i=1}^{neff} f_{eff(i)}.P_{AEeff(i)}\}.C_{FAE}.SFC_{AE} - \sum_{i=1}^{neff} f_{eff(i)}.P_{eff(i)}.C_{FME}.SFC_{ME})}{f_i.f_c.Capacity.f_w.V_{ref}}$$

With the following Notes:

The global fi factor may also be written:
$f_i = (\prod_{i=1}^{m} f_i)$
where each individual f_i factor is explained under section 9 of this document.

If part of the normal maximum sea load is provided by shaft generators, the term $P_{AE}.C_{FAE}.SFC_{AE}$ may be replaced by:
$(P_{AE} - 0.75 * \sum_{i=1}^{nPTO} P_{PTO(i)}).C_{FAE}.SFC_{AE} + 0.75 * \sum_{i=1}^{nPTO} P_{PTO(i)}.C_{FME(i)}.SFC_{ME(i)}$
with the condition $0.75 * \sum_{i=1}^{nPTO} P_{PTO(i)} \leq P_{AE}$

Where the total propulsion power is limited by verified technical means as indicated under section 6, the term $(\sum_{i=1}^{nME} P_{ME(i)}.C_{FME(i)}.SFC_{ME(i)} + \sum_{i=1}^{nPTI} P_{PTI(i)}.C_{FAE}.SFC_{AE})$ is to be replaced by 75 percent of the limited total propulsion power multiplied by the average weighted value of ($SFC_{ME}.C_{FME}$) and ($SFC_{AE}.C_{FAE}$)

Due to the uncertainties in the estimation of the different parameters, the accuracy of the calculation of the attained EEDI cannot be better than 1%.
Therefore, the values of attained and required EEDI have to be reported with no more than three significant figures (for instance, 2.23 or 10.3) and the checking of Regulation 20, chapter 4 of MARPOL Annex VI has to be verified in accordance with this accuracy.

4 FUEL CONSUMPTION AND CO_2 EMISSION

The conversion factor C_F and the specific fuel consumption, SFC, are determined from the results recorded in the parent engine Technical File as defined in paragraph 1.3.15 of the NOx Technical Code 2008.

The fuel grade used during the test of the engine in the test bed measurement of SFC determines the value of the C_F conversion factor according to the table under 2.1of the IMO Calculation Guidelines.

SFC is the corrected specific fuel consumption, measured in g/kWh, of the engines. The subscripts ME(i) and AE(i) refer to the main and auxiliary engine(s), respectively. SFC_{AE} is the power-weighted average among $SFC_{AE(i)}$ of the respective engines *i*.

For main engines certified to the E2 or E3 test cycles of the NOx Technical Code 2008, the engine Specific Fuel Consumption ($SFC_{ME(i)}$) is that recorded in the test report included in a NOx Technical File for the parent engine(s) at 75% of MCR power.

For engines certified to the D2 or C1 test cycles of the NOx Technical Code 2008, the engine Specific Fuel Consumption ($SFC_{AE(i)}$) is that recorded in the test report included in a NOx Technical File for the parent engine(s) at 50% of MCR power or torque rating.

The SFC is to be corrected to the value corresponding to the ISO standard reference conditions using the standard lower calorific value of the fuel oil (42,700kJ/kg), referring to ISO 15550:2002 and ISO 3046-1:2002.

For LNG driven engines for which SFC is measured in kJ/kWh, the SFC value is to be converted to g/kWh using the standard lower calorific value of the LNG (48,000 kJ/kg), referring to the 2006 IPCC Guidelines.

For those engines which do not have a test report included in a NOx Technical File because its power is below 130 kW, the SFC specified by the manufacturer is to be used.

At the design stage, in case of unavailability of test reports in the NOx Technical File, the SFC value given by the manufacturer with the addition of the guarantee tolerance is to be used.

5 CAPACITY, POWER AND SPEED

5.1 Capacity

The capacity of the ship is computed as a function of the deadweight as indicated under 2.3 of the IMO Calculation Guidelines.
For the computation of the deadweight according to 2.4 of the IMO Calculation Guidelines, the lightweight of the ship and the displacement at the summer load draught are to be based on the results of the inclining test or lightweight check provided in the final stability booklet. At the design stage, the deadweight may be taken in the provisional documentation.

5.2 Power

The installed power for EEDI determination is taking into account the propulsion power and in general a fixed part of the auxiliary power, measured at the output of the main or auxiliary engine.
The total propulsion power is defined as 75% MCR of all main engines.

The total shaft propulsion power (power delivered to propellers P_S) is conventionally taken as follows:

$$\sum_{i=1}^{nME} P_{ME(i)} + \sum_{i=1}^{nPTI} (P_{PTI(i)} \cdot \eta_{PTI(i)}) \cdot \eta_{\overline{Gen}}$$

In this formula:

- The value of $P_{ME(i)}$ may be limited by verified technical means (see 6 below)
- The total shaft propulsion power may be limited by verified technical means. In particular an electronic engine control system may limit the total propulsion power, whatever the number of engines in function (see 6 below)

The auxiliary power can be nominally defined as a specified proportion of main engine power aiming to cover normal maximum sea load for propulsion and accommodation[1]. The nominal values are 2.5% of main engine power plus 250 kW for installed main engine power equal to or above 10 MW. 5% of P_{ME} will be accounted if less than 10 MW main engine power is installed. Alternatively, as explained below, the value for auxiliary power can be taken from the power balance table for the ship.

In addition, if shaft motors are installed, then in principle 75% of the shaft motor power is accounted for in the EEDI calculation. Detailed explanation about this is given in section 6.

For a ship where the P_{AE} value calculated by paragraph 2.5.6.1 or 2.5.6.2 of the IMO Calculation Guidelines is significantly different from the total power used at normal seagoing operations, as an option if the difference leads to a variation of the computed value of the EEDI exceeding 1%, the P_{AE} value could be estimated by the electric power (excluding propulsion) in conditions when the ship is engaged in a voyage at reference speed (V_{ref}) as given in the electric power table (EPT), divided by the average efficiency of the generator(s) weighted by power.

5.3 Speed V_{ref}

The speed V_{ref} is the ship speed, measured in knots, verified during sea trials and corrected to be given in the following conditions:

- in deep water
- assuming the weather is calm with no wind, no current and no waves
- in the loading condition corresponding to the Capacity
- at the total shaft propulsion power defined in 5.2 taking into account shaft generators and shaft motors

6 SHAFT GENERATOR AND SHAFT MOTOR

6.1 Introduction and background

Ships need electrical power for the operation of engine auxiliary systems, other systems, crew accommodation and for any cargo purposes. This electrical power can be generated by diesel-generator sets (gen-sets), shaft generators, waste heat recovery systems driving a generator and possibly by new innovative technologies, e.g. solar panels. Diesel-generator sets and shaft generators are the most common systems. While diesel-generator sets use a diesel engine powering a generator, a shaft generator is driven by the main engine. It is considered that due to the better efficiency of the main engine and efficiency of the shaft generator less CO_2 is emitted compared to gen-set operation.

The EEDI formula expresses the propulsion power of a vessel as 75% of the main engine power P_{ME}. It is also termed shaft power P_S, which corresponds to the ship's speed V_{ref} in the EEDI formula.
P_{AE} - the auxiliary power - is also included in the EEDI formula. However, this power demand is largely dependent on loading and trading patterns and it must also incorporate safety aspects, for example, the provision of a spare generator set. As noted in section 5, the auxiliary power can generally be taken into account as a fixed proportion of the main engine power (i.e. nominally 2.5% plus 250kW)[2].

The use of shaft generators is a well proven and often applied technology, particularly for high electrical power demands related to the payload e.g. reefer containers. Usually a ship design implements a main engine to reach the envisaged speed with some provision of sea margin. For the use of a shaft generator past practice and understanding was to install a

[1] by paragraph 2.5.6.1 or 2.5.6.2 of the IMO Calculation Guidelines

[2] c.f.: precise instruction in IMO Calculation Guidelines

bigger main engine to reach the same speed compared to the design without a shaft generator and to then have the excess power available from the main engine at any time for generation of electrical power. As a rule of thumb, one more cylinder was added to the main engine to cover this additional power demand.
The difficulty with this issue for calculation of the EEDI is that the excess power could be used to move the ship faster in the case where the shaft generator is not in use which would produce a distortion between ship designs which are otherwise the same.

The IMO Calculation Guidelines take these circumstances into account and offer options for the use of shaft generators. These options are described in detail, below.

Further, electric shaft motors operate similarly to shaft generators; sometimes a shaft generator can act as a shaft motor. The possible influence of shaft motors has also been taken into account in the IMO Calculation Guidelines and is also illustrated, below.

6.2 Main engine power without shaft generators

The main engines are solely used for the ship's propulsion. For the purpose of the EEDI, the main engine power is 75 % of the rated installed power MCR_{ME} for each main engine:

$$P_{ME(i)} = 0.75 \times MCR_{ME(i)}$$

6.3 Main engine power with shaft generators

Shaft generators produce electric power using power from the prime mover (main engine). Therefore the power used for the shaft generator is not available for the propulsion. Hence MCR_{ME} is the sum of the power needed for propulsion and the power needed for the shaft generator. Thus at least a part of the shaft generator's power should be deductible from the main engine power (P_{ME}).
The power driving the shaft generator is not only deducted in the calculation. As this power is not available for propulsion this yields a reduced reference speed. The speed is to be determined from the power curve obtained at the sea trial as explained in the schematic figure provided in paragraph 2.5 of the IMO Calculation Guidelines.

It has been defined that 75% of the main engine power is entered in the EEDI calculation. To induce no confusion in the calculation framework, it has therefore also been defined to take into account 75% of the shaft power take off / take in (as electrical power [kW] as displayed on the name plate of the shaft generator/motor).

For the calculation of the effect of shaft generators, two options are available.

6.3.1 Option 1

For this option, $P_{PTO(i)}$ is defined as 75% of the rated electrical output power MCR_{PTO} of each shaft generator. The maximum allowable deduction is limited by the auxiliary power P_{AE} as described in Paragraph 2.6 in the IMO Calculation Guidelines.
Then the main engine power P_{ME} is:

$$P_{PTO(i)} = 0.75 \times MCR_{PTO(i)}$$

$$\sum P_{ME(i)} = 0.75 \times \sum \left(MCR_{ME(i)} - P_{PTO(i)} \right) \; with \; 0.75 \times \sum P_{PTO(i)} \le P_{AE}$$

This means, that only the maximum amount of shaft generator power that is equal to P_{AE} is deductible from the main engine power. In doing so, 75% of the shaft generator power must be greater than the auxiliary power calculated in accordance to Para. 2.6. of the IMO Calculation Guidelines.
Higher shaft generators output than P_{AE} will not be accounted for under option 1.

6.3.2 Option 2

The main engine power P_{ME} to be considered for the calculation of the EEDI is defined as 75% of the power to which the propulsion system is limited. This can be achieved by any verified technical means, e.g. by electronic engine controls.

$$P_{ME(i)} = 0.75 \times P_{Shaft,limit}$$

This option is to cover designs with the need for very high power requirements (e.g., pertaining to the cargo). With this option it is ensured that the higher main engine power cannot be used for a higher ship speed. This can be safeguarded by the use of verified technical devices limiting the power to the propulsor.

For example, consider a ship having a 15 MW main engine with a 3 MW shaft generator. The shaft limit is verified to 12 MW. The EEDI is then calculated with only 75% of 12 MW as main engine power as, in any case of operation, no more power than 12 MW can be delivered to the propulsor, irrespective of whether a shaft generator is in use or not.

It is to be noted that the guidelines do not stipulate any limits as to the value of the shaft limit in relation to main engine power or shaft generator power.

6.3.3 The use of specific fuel oil consumption and C_F-factor

Shaft generators are driven by the main engine, therefore the specific fuel oil consumption of the main engine is allowed to be used to the full extent if 75% of the shaft generator power is equal to P_{AE}.
In the case shaft generator power is less than P_{AE} then 75% of the shaft generator power is calculated with the main engine's specific fuel oil consumption and the remaining part of the total P_{AE} power is calculated with SFC of the auxiliaries (SFC_{AE}).

The same applies to the conversion factor C_F, if different fuels are used in the EEDI calculation.

6.4 Total shaft power with shaft motors

In the case where shaft motor(s) are installed, the same guiding principles as explained for shaft generators, above, apply. But in contrast to shaft generators, motors do increase the total power to the propulsor and do increase ships' speed and therefore must be included in the total shaft power within the EEDI calculation. The total shaft power is thus main engine(s) power plus the additional shaft motor(s) power:

$$\Sigma P_{ME(i)} + \Sigma P_{PTI(i),Shaft}$$

Where:

$$\sum P_{PTI(i),Shaft} = \sum \left(0.75 \cdot P_{SM,\max(i)} \cdot \eta_{PTI(i)}\right)$$

Similar to the shaft generators, only 75% of the rated power consumption $P_{SM,max}$ (i.e. rated motor output divided by the motor efficiency) of each shaft motor divided by the weighted average efficiency of the generator(s) $\eta_{\overline{Gen}}$ is taken into account for EEDI calculation.[3]

[3] The efficiency of shaft generators in the previous section has consciously not been taken into account in the denominator as inefficient generator(s) would increase the deductible power.

$$\sum P_{PTI(i)} = \frac{\sum \left(0.75 \cdot P_{SM,\max(i)}\right)}{\eta_{Gen}}$$

A power limitation similar to that described above for shaft generators can also be used for shaft motors. So if a verified technical measure is in place to limit the propulsion output, only 75% of limited power is to be used for EEDI calculation and also for that limited power V_{ref} is determined.

A diagram is inserted to highlight where the mechanical and electrical efficiencies or the related devices (PTI and Generator's) are located:

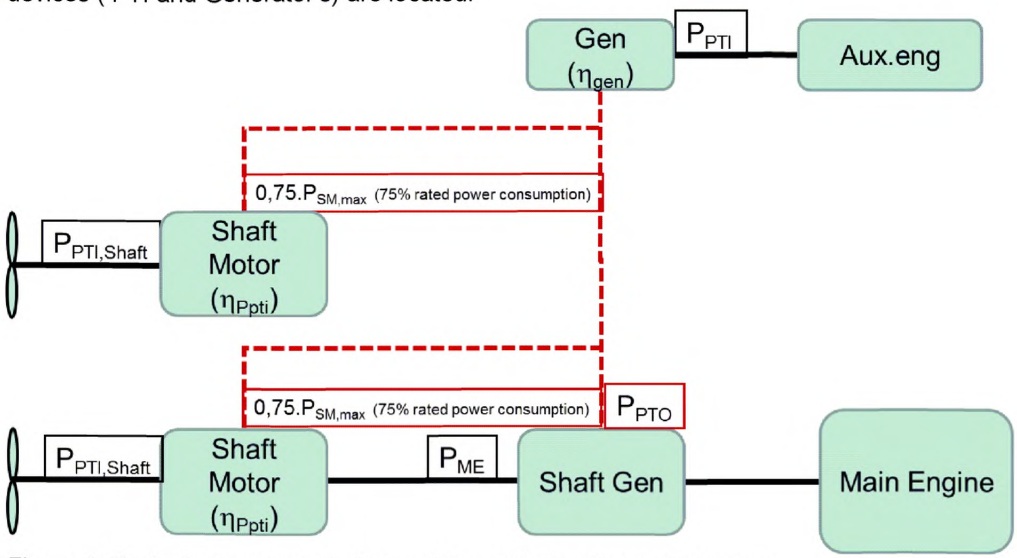

Figure 1: Typical arrangement of propulsion and electric power system

6.5 Calculation examples

For these calculation examples the ships' following main parameters are set as:

MCR_{ME} = 20,000 kW
Capacity = 20,000 DWT
$C_{F,ME}$ = 3.206
$C_{F,AE}$ = 3.206
SFC_{ME} = 190 g/kWh
SFC_{AE} = 215 g/kWh
v_{ref} = 20 kn (without shaft generator/motor)

6.5.1 One main engine, no shaft generator

$$MCR_{ME} = 20{,}000kW$$
$$P_{ME} = 0.75 \times MCR_{ME} = 0.75 \times 20{,}000kW = 15{,}000kW$$
$$P_{AE} = (0.025 \times 20{,}000) + 250kW = 750kW$$

$$EEDI = ((15{,}000 \times 3.206 \times 190) + (750 \times 3.206 \times 215))/(20 \times 20{,}000)$$
$$= 24.1\ gCO_2/tnm$$

6.5.2 One main engine, 0.75 x P_{PTO}<P_{AE}, option 1

$$MCR_{PTO} = 500kW$$
$$P_{PTO} = 500kW \times 0.75 = 375kW$$
$$MCR_{ME} = 20{,}000kW$$
$$P_{ME} = 0.75 \times (MCR_{ME} - P_{PTO}) = 0.75 \times (20{,}000kW - 375kW) = 14{,}719kW$$
$$P_{AE} = (0.025 \times MCR_{ME}) + 250kW = 750kW$$
$$v_{ref} = 19.89kn: \quad \text{The speed at } P_{ME} \text{ determined from the power curve}$$
$$EEDI = ((P_{ME} \times C_{F,ME} \times SCF_{ME}) + (0.75 \times P_{PTO} \times C_{F,ME} \times SCF_{ME}) + ((P_{AE} - 0.75 \times P_{PTO}) \times C_{F,AE} \times SFC_{AE}))/(DWT \times v_{ref})$$
$$= 23.8\ g CO_2/t\,nm \quad \approx 1\%$$

6.5.3 One main engine, 0.75 x P_{PTO}=P_{AE}, option 1

$$MCR_{PTO} = 1{,}333kW$$
$$P_{PTO} = 1{,}333kW \times 0.75 = 1{,}000kW$$
$$MCR_{ME} = 20{,}000kW$$
$$P_{ME} = 0.75 \times (MCR_{ME} - P_{PTO}) = 0.75 \times (20{,}000kW - 1{,}000kW) = 14{,}250kW$$
$$P_{AE} = (0.025 \times MCR_{ME}) + 250kW = 750kW$$
$$v_{ref} = 19.71kn: \quad \text{The speed at } P_{ME} \text{ determined from the power curve}$$
$$EEDI = ((P_{ME} \times C_{F,ME} \times SCF_{ME}) + (0.75 \times P_{PTO} \times C_{F,ME} \times SCF_{ME}))/(DWT \times v_{ref})$$
$$= 23.2\ g CO_2/t\,nm \quad \approx 4\%$$

6.5.4 One main engine with shaft generator, 0.75 x P_{PTO}> P_{AE}, option 1

$$MCR_{PTO} = 2{,}000kW$$
$$0.75 \times P_{PTO} = 0.75 \times 2{,}000kW \times 0.75 = 1{,}125kW > P_{AE} \Rightarrow P_{PTO} = P_{AE}/0.75 = 1{,}000kW$$
$$MCR_{ME} = 20{,}000kW$$
$$P_{ME} = 0.75 \times (MCR_{ME} - P_{PTO}) = 0.75 \times (20{,}000kW - 1{,}000kW) = 14{,}250kW$$
$$P_{AE} = (0.025 \times MCR_{ME}) + 250kW = 750kW$$
$$v_{ref} = 19.71kn: \quad \text{The speed at } P_{ME} \text{ determined from the power curve}$$
$$EEDI = ((P_{ME} \times C_{F,ME} \times SCF_{ME}) + (0.75 \times P_{PTO} \times C_{F,ME} \times SCF_{ME}))/(DWT \times v_{ref})$$
$$= 23.2\ g CO_2/t\,nm \quad \approx 4\%$$

6.5.5 One main engine with shaft generator, 0.75 x P_{PTO}> P_{AE}, option 2

$$MCR_{PTO} = 2{,}000kW$$
$$MCR_{ME} = 20{,}000kW$$
$$P_{Shaft,limit} = 18{,}000kW$$
$$P_{ME} = 0.75 \times (P_{Shaft,limit}) = 0.75 \times (18{,}000kW) = 13{,}500kW$$
$$P_{AE} = (0.025 \times MCR_{ME}) + 250kW = 750kW$$
$$v_{ref} = 19.41kn: \quad \text{The speed at } P_{ME} \text{ determined from the power curve}$$
$$EEDI = ((P_{ME} \times C_{F,ME} \times SFC_{ME}) + (P_{AE} \times C_{F,ME} \times SFC_{ME}))/(DWT \times v_{ref})$$
$$= 22.4\ g CO_2/t\,nm \quad \approx 7\%$$

6.5.6 One main engine, one shaft motor

$$MCR_{ME} = 18{,}000kW$$
$$P_{ME} = 0.75 \times MCR_{ME} = 0.75 \times 18{,}000kW = 13{,}500kW$$
$$P_{AE} = \left\{0.025 \times \left(MCR_{ME} + \frac{P_{PTI}}{0.75}\right)\right\} + 250kW = \left\{0.025 \times \left(18{,}000 + \frac{1612.9}{0.75}\right)\right\} + 250kW = 754kW$$
$$P_{SM,max} = 2{,}000kW$$
$$P_{PTI} = 0.75 \times P_{SM,max} / \eta_{\overline{Gen}} = 1{,}612.9kW$$
$$\eta_{PTI} = 0.97$$
$$\eta_{\overline{Gen}} = 0.93$$
$$P_{Shaft} = P_{ME} + P_{PTI,Shaft} = P_{ME} + (P_{PTI} \cdot \eta_{PTI}) \cdot \eta_{\overline{Gen}} = 13{,}500kW + (1612.9 \cdot 0.97) \cdot 0.93 = 14{,}955kW$$
$$v_{ref} = 20kn$$

$$EEDI = \left(\left(P_{ME} \times C_{F,ME} \times SFC_{ME}\right) + \left(P_{AE} \times C_{F,AE} \times SFC_{AE}\right) + \left(P_{PTI} \times C_{F,AE} \times SFC_{AE}\right)\right) / \left(DWT \times v_{ref}\right)$$
$$= 24.6\ gCO_2/tnm \quad \approx -2\%$$

7 WEATHER FACTOR f_w

f_w is a non-dimensional coefficient indicating the decrease of speed in representative sea conditions of wave height, wave frequency and wind speed (e.g. Beaufort Scale 6), and is taken as 1.0 for the calculation of attained EEDI.

When a calculated f_w is used, the attained EEDI using calculated f_w is to be presented as "attained $EEDI_{weather}$" in order to clearly distinguish it from the attained EEDI under regulations 20 and 21 in MARPOL Annex VI.
Guidelines for the calculation of the coefficient f_w for the decrease of ship speed in respective sea conditions will be developed.

8 CORRECTION FACTOR FOR SHIP SPECIFIC DESIGN ELEMENTS f_j

Except in the cases listed below, the value of the f_j factor is 1.0.

For Finnish-Swedish ice class notations or equivalent notations of the Classification Societies, the f_j correction factor is indicated in Table 1 under 2.8.1 of the IMO Calculation Guidelines.[4]

For shuttle tankers with propulsion redundancy defined as oil tankers between 80,000 and 160,000 deadweight equipped with dual-engines and twin-propellers and assigned the class notations covering dynamic positioning and propulsion redundancy, the f_j factor is to be 0.77.

The total shaft propulsion power of shuttle tankers with redundancy is usually not limited by verified technical means.

9 CAPACITY FACTOR f_i

Except in the cases listed below, the value of the f_i factor is 1.0.

For Finnish-Swedish ice class notations or equivalent notations of the Classification Societies, the f_i correction factor is indicated in Table 2 under 2.11.1 of the IMO Calculation Guidelines.[4]

[4] Tables 1 and 2 in IMO Calculation Guidelines refer to Finnish/Swedish ice classed ships usually trading in the Baltic Sea. Justified alternative values for f_i and f_j factors may be accepted for ice-classed ships outside this scope of application (e.g. very large ships or POLAR CLASS)

For a ship with voluntary structural enhancement, the f_{iVSE} factor is to be computed according to 2.11.2 of the IMO Calculation Guidelines.

For bulk carriers and oil tankers built in accordance with the Common Structural Rules and assigned the class notation CSR, the f_{iCSR} factor is to be computed according to 2.11.3 of the IMO Calculation Guidelines.

f_i capacity factors can be cumulated (multiplied), but the reference design for calculation of f_{iVSE} is to comply with the ice notation and/or Common Structural Rules as the case may be.

10 CUBIC CAPACITY CORRECTION FACTOR fc

Except in the cases listed below, the value of the fc factor is 1.0.

For chemical tankers as defined in regulation 1.16.1 of MARPOL Annex II, the f_c factor is to be computed according to 2.12.1 of the IMO Calculation Guidelines.

For gas carriers as defined in regulation 1.1 of IGC Code having direct diesel driven propulsion, the f_c factor is to be computed according to 2.12.2 of the IMO Calculation Guidelines.

11 INNOVATIVE ENERGY EFFICIENT TECHNOLOGIES

Innovative energy efficient technologies are not taken into account in the first version of this document (see 1.3)

12 EXAMPLE OF CALCULATION

12.1 List of input parameters for calculation of EEDI

The input parameters used in the calculation of the EEDI are provided in Table 1.

The values of all these parameters are to be indicated in the EEDI Technical File and the documents listed in the "source" columnare to be submitted to the verifier.

Symbol	Name	Usage	Source	Scope
	Service notation	Capacity, f_i, f_j and f_c factors		For the ship
	Class notations	fj for shuttle tanker, f_{iCSR}	Classification file	
	Ice notation	fi, fj for ice class		
Lpp	Length between perpendiculars (m)	fi, fj for ice class		
Δ	Displacement @ summer load draught (t)	deadweight	final stability file	
LWT	Ligthweight (t)	deadweight, f_{iVSE}, f_{iCSR}, fc	Sheets of Submitter calculation for $lightweight_{referencedesign}$ lightweight check report	
P_{AE}	Auxiliary engine power (kW)	EEDI	Note: Computed from engines & PTIs powers or electric power table	
V_{ref}	Reference speed (knot)	EEDI	Sea trial report	
Cube	Total cubic capacity of the cargo tanks (m3)	f_c for chemical tankers and gas carriers	Tonnage file	
MCR	Rated installed power (kW)	power	EIAPP certificate or nameplate (if less than 130 kW)	Per engine (nME + nGEN)
MCR_{lim}	Limited rated output power after PTO in (kW)	P_{ME} with PTO option 2	Verification file	

Symbol	Name	Usage	Source	Scope
	Fuel grade	C_F, SFC	NOX Technical File of the parent engine	
SFC	Corrected specific fuel consumption (g/kWh)	EEDI	NOx Technical File of the parent engine	
MCR_{PTO}	Rated electrical output power (kW)	P_{ME}		Per shaft generator (nPTO)
$P_{SM,max}$	Rated power consumption (kW)	EEDI		Per shaft motor (nPTI)
η_{PTI}	efficiency	power		
η_{GEN}	efficiency	power		Per generator (nGEN)
$P_{SHAFTlim}$	Limited shaft propulsion power (kW)	Limited power where means of limitation are fitted	Verification file	Per shaftline (nSHAFT)

Table 1: input parameters for calculation of EEDI

12.2 Sample calculation of EEDI

A sample calculation of EEDI is provided in Appendix 2.

Part III - Verification of EEDI

13 VERIFICATION PROCESS

Attained EEDI is to be computed in accordance with the IMO Calculation Guidelines and Part II of the present Industry Guidelines. Survey and certification of the EEDI are to be conducted on two stages:

1. preliminary verification at the design stage
2. final verification at the sea trial

The flow of the survey and certification process is presented in Figure 2.

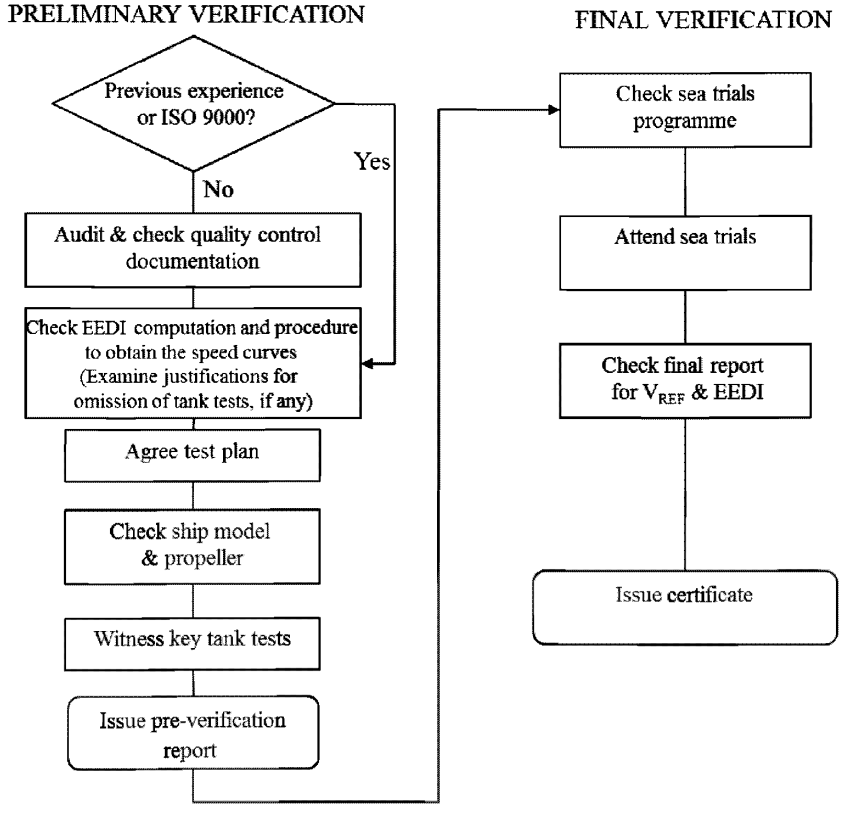

Figure 2: Flow of survey and certification process by verifier

14 DOCUMENTS TO BE SUBMITTED

A sample of document to be submitted to the verifier including additional information for verification is provided in Appendix 2.

The following information is to be submitted by the submitter to the verifier at the design stage:

EEDI Technical File	EEDI Technical File as defined in the IMO Verification Guidelines. See example of the EEDI Technical File in Appendix 1 of IMO Verification Guidelines.
NOx Technical File	Copy of the NOx Technical File and documented summary of the SFC correction for each type of main and auxiliary engine with copy of EIAPP certificate. Note: if the NOx Technical File has not been approved at the time of the preliminary verification, the SFC value with the addition of the guarantee tolerance is to be provided by Manufacturer. In this case, the NOx Technical File is to be submitted at the final verification stage.

Electric Power Table	If P_{AE} is significantly different from the values computed using the formula in 2.5.6.1 or 2.5.6.2 of the IMO Calculation Guidelines
Ship lines and model particulars	- Lines of ship - Report including the particulars of the ship model and propeller model
Verification file of power limitation technical arrangement	If the propulsion power is voluntarily limited by verified technical means
Power curves	Power-speed curves predicted at full scale in sea trial condition and EEDI condition
Description of the towing tank test facility and towing tank test organisation quality manual	If the verifier has no recent experience with the towing tank test facility and the towing tank test organization quality system is not ISO 9001 certified. - Quality management system of the towing tank test including process control, justifications concerning repeatability and quality management processes - Records of measuring equipment calibration as described in Appendix 3 - Standard model-ship extrapolation and correlation method (applied method and tests description)
Gas fuel oil general arrangement plan	If gas fuel is used as the primary fuel of the ship fitted with dual fuel engines. Gas fuel storage tanks (with capacities) and bunkering facilities are to be described.
Towing Tank Tests Plan	Plan explaining the different steps of the towing tank tests and the scheduled inspections allowing the verifier to check compliance with the items listed in Appendix 1 concerning tank tests
Towing Tank Tests Report	- Report of the results of the towing tank tests at sea trial and EEDI condition as required in Appendix 4 - Values of the experience-based parameters defined in the standard model-ship correlation method used by the towing tank test organization/shipyard - Reasons for exempting a towing tank test, only if applicable - Numerical calculations report and validation file of these calculations, only if calculations are used to derive power curves
Ship reference speed V_{ref}	Detailed calculation process of the ship speed, which is to include the estimation basis of experience-based parameters such as roughness coefficient, wake scaling coefficient

Table 2: documents to be submitted at the design stage

The following information is to be submitted by the submitter to the verifier at the final verification stage (and before the sea trials for the programme of sea trials):

Programme of sea trials	Description of the test procedure to be used for the speed trial, with number of speed points to be measured and indication of PTO/PTI to be in operation, if any.
Sea trials report	Report of sea trials with detailed computation of the corrections allowing determination of the reference speed V_{ref}
Final stability file	Final stability file including lightweight of the ship and displacement table based on the results of the inclining test or the lightweight check
Final power curves	Final power curve in the EEDI condition showing the speed adjustment methodology
Revised EEDI Technical File	Including identification of the parameters differing from the calculation performed at the initial verification stage
Ship lines	Lines of actual ship

Table 3: documents to be submitted at the final verification stage

In line with the IMO Verification Guidelines (4.1.2), it is recognized that the documents listed above may contain confidential information of submitters, which requires Intellectual Property Rights (IPR) protection. In the case where the submitter wants a non-disclosure agreement with the verifier, the additional information is to be provided to the verifier upon mutually agreed terms and conditions.

15 PRELIMINARY VERIFICATION AT THE DESIGN STAGE

15.1 Scope of the verifier work

For the preliminary verification of the EEDI at the design stage, the verifier:

- Review the EEDI Technical File, check that all the input parameters (see 12.1 above) are documented and justified and check that the possible omission of a towing tank test has been properly justified
- Check that the ITTC procedures and quality system are implemented by the organization conducting the towing tank tests. The verifier should possibly audit the quality management system of the towing tank if previous experience is insufficiently demonstrated
- Witness the towing tank tests according to a test plan initially agreed between the submitter and the verifier
- Check that the work done by the towing tank test organisation is consistent with the present Guidelines. In particular, the verifier will check that the power curves at full scale are determined in a consistent way between sea trials and EEDI loading conditions, applying the same calculation process of the power curves and considering justifiable differences of experience based parameters between the two conditions
- Issue a pre-verification report

15.2 Definitions

Experience-based parameters means parameters used in the determination of the scale effects coefficients of correlation between the towing tank model scale results and the full scale predictions of power curves.
This may include:

1. Hull roughness correction
2. Wake correction factor
3. Air resistance correction factor (due to superstructures and deck load)
4. Appendages correction factor (for appendages not present at model scale)
5. Propeller cavitation correction factor
6. Propeller open-water characteristics correction
7. C_P and C_N (see below)
8. ΔC_{FC} and Δw_C (see below)

Ship of the same type means a ship of which hull form (expressed in the lines such as sheer plan and body plan) excluding additional hull features such as fins and of which principal particulars are identical to that of the base ship.

Definition of survey methods directly involving the verifier: Review and Witness.
Review means the act of examining documents in order to determine identification and traceability and to confirm that requested information are present and that EEDI calculation process conforms to relevant requirements.

Witness means the attendance at scheduled key steps of the towing tank tests in accordance with the agreed Test Plan to the extent necessary to check compliance with the survey and certification requirements.

15.3 Towing tank tests and numerical calculations
There are two loading conditions to be taken into account for EEDI: EEDI loading condition and sea trial condition.
The speed power curves for these two loading conditions are to be based on towing tank test measurements. Towing tank test means model towing tests, model self-propulsion tests and model propeller open water tests.
Numerical calculations may be accepted as equivalent to model propeller open water tests.

A towing tank test for an individual ship may be omitted based on technical justifications such as availability of the results of towing tank tests for ships of the same type according to 4.2.5 of the IMO Verification Guidelines.

Numerical calculations may be submitted to justify derivation of speed power curves, where only one parent hull form have been verified with towing tank tests, in order to evaluate the effect of additional hull features such as fore bulb variations, fins and hydrodynamic energy saving devices.
These numerical tests may include CFD calculation of propulsive efficiency at reference speed V_{ref} as well as hull resistance variations and propeller open water efficiency.
In order to be accepted, these numerical tests are to be carried out in accordance with defined quality and technical standards (ITTC 7.5-03-01-04 at its latest revision or equivalent). The comparison of the CFD-computed values of the unmodified parent hull form with the results of the towing tank tests must be submitted for review.

15.4 Qualification of verifier personnel
Surveyors of the verifier are to confirm through review and witness as defined in 15.2 that the calculation of EEDI is performed according to the relevant requirements listed in 1.1. The surveyors are to be qualified to be able to carry out these tasks and procedures are to be in place to ensure that their activities are monitored.

15.5 Review of the towing tank test organisation quality system
The verifier is to familiarize with the towing tank test organization test facilities, measuring equipment and quality system for consideration of complying with the requirements of 15.6 prior to the test attendance when the verifier has no recent experience of the towing tank test facilities and the towing tank test organization quality control system is not certified according to a recognized scheme (ISO 9001 or equivalent).

In this case, the following additional information relative to the towing tank test organization is to be submitted to the verifier:

1. descriptions of the towing tank test facility; this includes the name of the facility, the particulars of towing tanks and towing equipment, and the records of calibration of each monitoring equipment as described in Appendix 3
2. quality manual containing at least the information listed in the ITTC Sample quality manual (2002 issue) Records of measuring equipment calibration as described in Appendix 3
3. standard model-ship extrapolation and correlation method (applied method and tests description)

15.6 Review and Witness
The verifier is to review the EEDI Technical File, using also the other documents listed in table 2 and submitted for information in order to verify the calculation of EEDI at design stage. This review activity is described in Appendix 1. Since detailed process of the towing tank tests depends on the practice of each submitter, sufficient information is to be included in the document submitted to the verifier to show that the principal scheme of the towing tank test process meets the requirements of the reference documents listed in Appendix 1 and Appendix 4.

Prior to the start of the towing tank tests, the submitter is to submit a test plan to the verifier. The verifier reviews the test plan and agrees with the submitter which scheduled inspections will be performed with the verifier surveyor in attendance in order to perform the verifications listed in Appendix 1 concerning the towing tank tests.

Following the indications of the agreed test plan, the submitter will notify the verifier for the agreed tests to be witnessed. The submitter will advise the verifier of any changes to the

activities agreed in the Test Plan and provide the submitter with the towing tank test report and results of trial speed prediction.

15.7 Model-ship correlation

Model-ship correlation method followed by the towing tank test organization or shipyard is to be properly documented with reference to the 1978 ITTC Trial prediction method given in ITTC Recommended Procedure 7.5-02-03-1.4 rev.02 of 2011 or subsequent revision, mentioning the differences between the followed method and the 1978 ITTC trial prediction method and their global equivalence.

Considering the formula giving the total full scale resistance coefficient of the ship with bilge keels and other appendages:

$$C_{TS} = \frac{S_S + S_{BK}}{S_S}.[(1+k).C_{FS} + \Delta C_F + C_A] + C_R + C_{AAS} + C_{AppS}$$

The way of calculating the form factor k, the roughness allowance ΔC_F, the correlation allowance C_A, the air resistance coefficient C_{AAS} and the appendages coefficient C_{AppS} are to be documented (if they are taken as 0, this has to be indicated also), as indicated in Appendix 4.

The correlation method used is to be based on thrust identity and the correlation factors is to be according to method 1 ($C_P - C_N$) or method 2 (ΔC_{FC} - Δw_C) of the 1978 ITTC Trial prediction method. If the standard method used by the towing tank test organization doesn't fulfil these conditions, an additional analysis based on thrust identity is to be submitted to the verifier.

The verifier will check that the power-speed curves obtained for the EEDI condition and sea trial condition are obtained using the same calculation process and properly documented as requested in Appendix 4 "Witnessing of model test procedures". In particular, the verifier will compare the differences between experience based coefficients Cp and ΔC_{FC} between the EEDI condition (∇_{full}) and sea trial condition if different from EEDI condition (∇) with the indications given in Figures 3.1 and 3.2 extracted from a SAJ-ITTC study on a large number of oil tankers. If the difference is significantly higher than the values reported in the Figures, a proper justification of the values is to be submitted to the verifier.

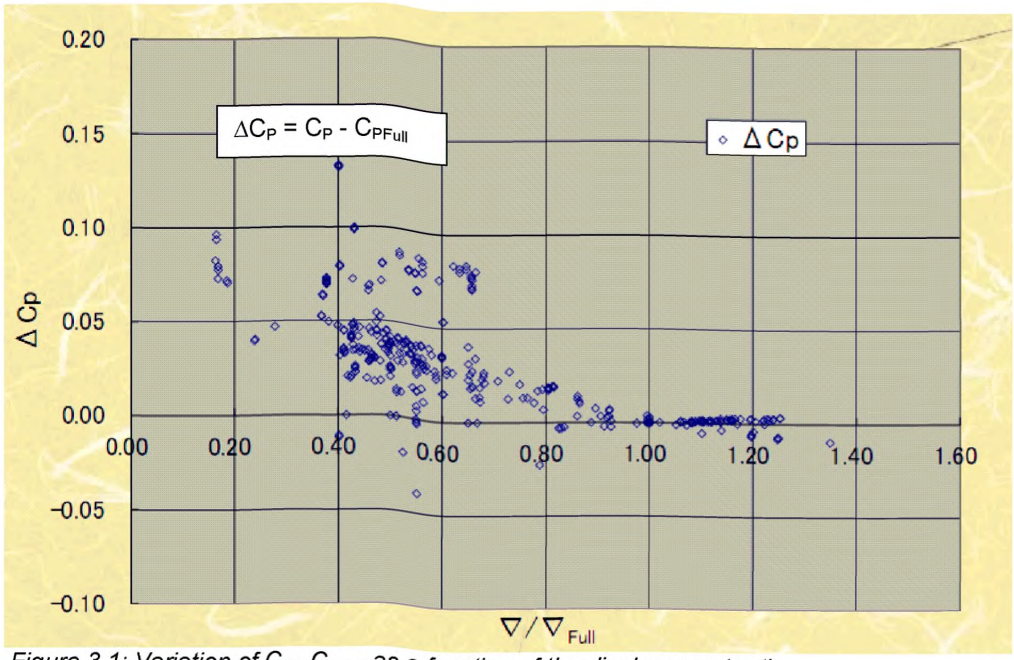

Figure 3.1: Variation of C_P- C_{PFull} as a function of the displacement ratio

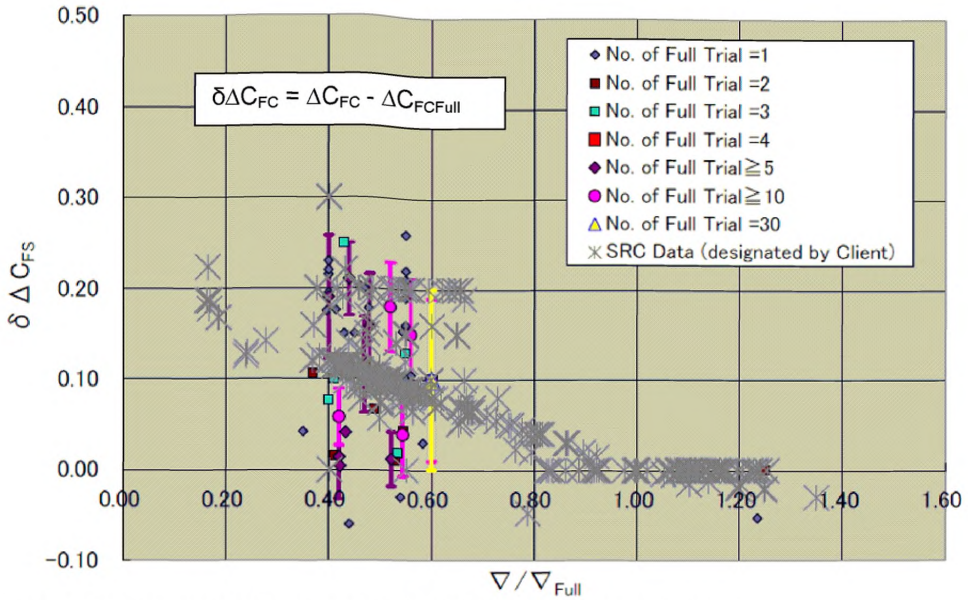

Figure 3.2: Variation of ΔC_{FC} as a function of the displacement ratio

15.8 Pre-verification report

The verifier issues the report on the "Preliminary Verification of EEDI" after it has verified the attained EEDI at the design stage in accordance with paragraphs 4.1 and 4.2 of the IMO Verification Guidelines.

A sample of the report on the “Preliminary Verification of EEDI” is provided in Appendix 5.

16 FINAL VERIFICATION AT SEA TRIAL

16.1 Sea trial procedure

For the verification of the EEDI at sea trial stage, the verifier shall:

- Examine the programme of the sea trial to check that the test procedure and in particular that the number of speed measurement points comply with the requirements of the IMO Verification Guidelines.
- Perform a survey to ascertain the machinery characteristics of some important electric load consumers and producers included in the EPT, if the power P_{AE} is directly computed from the EPT data's.
- Attend the sea trial and notes the main parameters to be used for the final calculation of the EEDI, as given under 4.3.3 of the IMO Verification Guidelines
- Review the sea trial report provided by the submitter and check that the measured power and speed have been corrected according to ITTC Recommended Procedure 7.5-04-01-01.2 or the equivalent (see note).
- Check that the power curve estimated for EEDI condition further to sea trial is obtained by power adjustment.
- Review the revised EEDI Technical File.
- Issue or endorse the International Energy Efficiency Certificate

Note: For application of the present Guidelines the following procedures are considered wholly or partly (according to their scope) equivalent to ITTC Recommended Procedure 7.5-04-01-01.2 :

1. ISO 15016:2002
2. BSRA Standard method of speed trials analysis – BSRA report 486 / 1976

Table 5 lists the data which are to be measured and recorded during sea trials:

Symbol	Name	Measurement	Remark
	Time and duration of sea trial		
	Draft marks readings		
	Air and sea temperature		
	Main engine setting	Machinery log	
Ψ_0	Course direction (rad)	Compass	
V_G	Speed over ground (m/s)	GPS	
n	Propeller rpm (rpm)	Tachometer	
P_S	Power measured (kW)	Torsion meter or strain gauges (for torque measurement) or any alternative method that offer an equivalent level of precision and accuracy of power measurement	
V_{WR}	Relative wind velocity (m/s)	Wind indicator	
Ψ_{WR}	Relative wind direction (rad)	See above	
T_m	Mean wave period (seas and swell) (s)	Visual observation by multiple observers supplemented by hindcast data or wave measuring devices (wave buoy, wave radar, etc.)	
$H_{1/3}$	Significant wave height (seas and swell) (m)	See above	
χ	Incident angle of waves (seas and swell) (rad)	See above	
δ_R	Rudder angle (rad)	Rudder	
β	Drift angle (rad)	GPS	

Table 5: Measured data during sea trials

Prior to the sea trial, the programme of the sea trials and , if available, additional documents listed in table 3 are to be submitted to the verifier in order for the verifier to check the procedure and to attend the sea trial and perform the verifications included in Appendix 1 concerning the sea trial.

The ship speed is to be measured at sea trial for at least three points of which range includes the total propulsion power defined in 5.2 according to the requirements of the IMO Verification Guidelines 4.3.6. This requirement applies individually to each ship, even if the ship is a sistership of a parent vessel.

16.2 Estimation of the EEDI reference speed V_{Ref}

The adjustment procedure is applicable to the most complex case where sea trials cannot be conducted in EEDI loading condition. It is expected that this will be usually the case for cargo ships like bulk carriers for instance.

The adjustment procedure uses the graphical construction described in Figure 4 that can be described by the following general procedure, applied only to EEDI functioning point (75% of MCR):

Compute for each corrected power value measured during sea trial the ratio $P_{measured}$ / $P_{tanktestpredicted}$. These ratios are put on the curve obtained from the model tests in EEDI condition to obtain the curve of the trial results for EEDI condition.

Reference is made to paragraph 3 of Appendix 2 (Figure 3.1) where an example is provided.

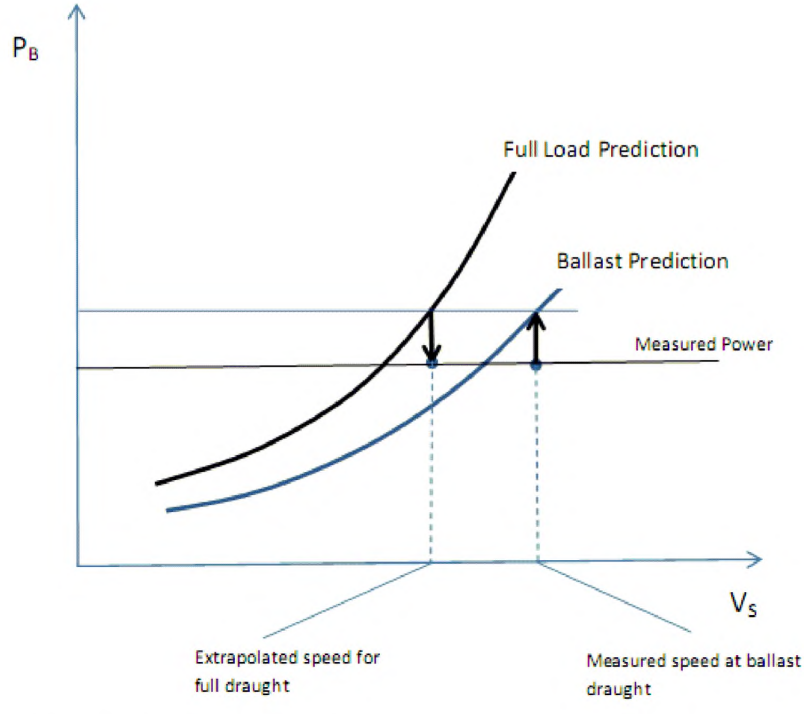

Figure 4: Extrapolation from Measured Values at sea trial draught to EEDI Draught

16.3 Revision of EEDI Technical File

The EEDI Technical File is to be revised, as necessary, by taking into account the results of sea trials. Such revision is to include, as applicable, the adjusted power curve based on the results of sea trial (namely, modified ship speed under the condition as specified in paragraph 2.2 of the IMO Calculation Guidelines), the finally determined deadweight/gross tonnage and the recalculated attained EEDI and required EEDI based on these modifications.

The revised EEDI Technical File is to be submitted to the verifier for the confirmation that the revised attained EEDI is calculated in accordance with regulation 20 of MARPOL Annex VI and the IMO Calculation Guidelines

17 VERIFICATION OF THE EEDI IN CASE OF MAJOR CONVERSION

Verification of the EEDI in case of major conversion is not taken into account in the first version of this document (see 1.3)

APPENDIX 1
Review and witness points

Table 4: Review and witness points

Ref.	Function	Survey method	Reference document	Documentation available to verifier	Remarks
01	EEDI Technical File	Review	IMO Verification Guidelines This document	Documents in table 2	
02	Limitation of power	Review	IMO Calculation Guidelines	Verification file of limitation technical means	Only If means of limitation are fitted
03	Electric Power Table	Review	Appendix 2 to IMO Calculation Guidelines Appendix 2 to IMO Verification Guidelines	EPT EPT-EEDI form	Only if PAE is significantly different from the values computed using the formula in 2.5.6.1 or 2.5.6.2 of the IMO Calculation Guidelines
04	Calibration of towing tank test measuring equipment	Review & witness	Appendix 3	Calibration reports	Check at random that measuring devices are well identified and that calibration reports are currently valid
05	Model tests – ship model	Review & witness	Appendix 4	Ship lines plan & offsets table Ship model report	Checks described in Appendix 4.1
06	Model tests – propeller model	Review & witness	Appendix 4	Propeller model report	Checks described in Appendix 4.2
07	Model tests – Resistance test, Propulsion test, Propeller open water test	Review & witness	Appendix 4	Towing tank tests report	Checks described in Appendix 4.3 Note: propeller open water test is not needed if a stock propeller is used. In this case, the open water characteristics of the stock propeller are to be annexed to the towing tank tests report.
08	Model-ship extrapolation and correlation	Review	ITTC 7.5-02-03-01.4 1978 ITTC performance prediction method (rev.02 of 2011 or subsequent revision) Appendix 4 This document 15.7	Documents in table 2	Check that the ship-model correlation is based on thrust identity with correlation factor according to method 1 ($C_P - C_N$) or method 2 ($\Delta C_{FC} - \Delta w_C$) Check that the power-speed curves obtained for the EEDI condition and sea trial condition are obtained using the same calculation process with justified values of experience-based parameters
09	Numerical calculations replacing towing tank tests	Review	ITTC 7.5-03-01-04 (latest revision) or equivalent	Report of calculations	
10	Electrical machinery survey prior to sea trials	Witness	Appendix 2 to IMO Verification Guidelines		Only if P_{AE} is computed from EPT
11	Programme of sea trials	Review	IMO Verification Guidelines	Programme of sea trials	Check minimum number of measurement points (3) Check the EEDI condition in EPT (if P_{AE} is computed from EPT)

Ref.	Function	Survey method	Reference document	Documentation available to verifier	Remarks
12	Sea trials	Witness	ISO 19019:2005 or ITTC 7.5-04-01-01.1 (latest revision)		Check: • Propulsion power, particulars of the engines • Draught and trim • Sea conditions • Ship speed • Shaft power & rpm Check operation of means of limitations of engines or shaft power (if fitted) Check the power consumption of selected consumers included in sea trials condition EPT (if P_{AE} is computed from EPT)
13	Sea trials – corrections calculation	Review	ITTC Recommended Procedure 7.5-04-01-01.2 or equivalent	Sea trials report	Check that the displacement and trim of the ship in sea trial condition has been obtained with sufficient accuracy Check compliance with ITTC Recommended Procedure 7.5-04-01-01.2 or equivalent
14	Sea trials – adjustment from trial condition to EEDI condition	Review	This document 16.2	Power curves after sea trial	Check that the power curve estimated for EEDI condition is obtained by power adjustment
15	EEDI Technical File – revised after sea trials	Review	IMO Verification Guidelines	Revised EEDI Technical File	Check that the file has been updated according to sea trials results

APPENDIX 2
Sample of document to be submitted to the verifier including additional information for verification

Caution

Protection of Intellectual Property Rights

This document contains confidential information (defined as additional information) of submitters. Additional information should be treated as strictly confidential by the verifier and failure to do so may lead to penalties. The verifier should note following requirements of IMO Verification Guidelines:

"*4.1.2 The information used in the verification process may contain confidential information of submitters, which requires Intellectual Property Rights (IPR) protection. In the case where the submitter want a non-disclosure agreement with the verifier, the additional information should be provided to the verifier upon mutually agreed terms and conditions.*"

Revision list

B	01/05/2014	Final stage: sections 1 to 16	XYZ	YYY	ZZZ
A	01/01/2013	Design stage: sections 1 to 13	XXX	YYY	ZZZ
REV.	**ISSUE DATE**	**DESCRIPTION**	**DRAWN**	**CHECKED**	**APPROVED**

Content

1 General 25

2 Data 25

3 Power curves 27

4 Overview of propulsion system and electric power system 27

5 Electric power table 28

6 Tank test organization quality system 30

7 Estimation process of power curves at design stage 30

8 Lines and offsets of the ship 33

9 Description of energy saving equipment 33

10 Justification of SFC (documents attached to NOx Technical File of the parent engine) . 33

11 Calculation of attained EEDI at design stage 34

12 Required EEDI 34

13 Calculation of attained $EEDI_{weather}$ 35

14 Lightweight check report 35

15 Sea trial report with corrections 35

16 Calculation of attained EEDI at final stage 36

1 GENERAL

This calculation of the Energy Efficiency Design Index (EEDI) is based on:

- Resolution MEPC.203(62) amendments to include regulations on energy efficiency in MARPOL Annex VI
- Resolution MEPC.212(63) 2012 Guidelines on the method of calculation of the attained Energy Efficiency Design Index (EEDI) for new ships

Calculations are being dealt with according to the Industry Guidelines on calculation and verification of EEDI, 2012 issue.

2 DATA

2.1 Main parameters

Parameter	Value	Reference
Owner	OWNER	
Builder	YARD	
Hull No.	12346	
IMO No.	94111XX	
Ship's type	Bulk carrier	
Ship classification notations	I HULL, MACH, Bulk Carrier CSR BC-A (holds 2 and 4 may be empty) ESP GRAB[20] Unrestricted Navigation AUT-UMS, GREEN PASSPORT, INWATERSURVEY, MON-SHAFT	
HULL PARTICULARS		
Length overall	191.0 m	
Length between perpendiculars	185.0 m	
Breadth, moulded	32.25 m	
Depth, moulded	17.9 m	
Summer load line draught, moulded	12.70 m	
Deadweight at summer load line draught	55 000 DWT	
Lightweight	11 590 tons	
Owner's voluntary structural enhancements	No	
MAIN ENGINE		
Type & manufacturer	BUILDER 6SRT60ME	
Specified Maximum Continuous Rating (SMCR)	9 200 kW x 105 rpm	
SFC at 75% SMCR	171 g/kWh	See paragraph 10.1
Number of set	1	
Fuel type	Diesel/Gas oil	
AUXILIARY ENGINES		
Type & manufacturer	BUILDER 5X28	
Specified Maximum Continuous Rating (SMCR)	650 kW x 700 rpm	
SFC at 50% SMCR	205 g/kWh	See paragraph 10.2
Number of set	3	
Fuel type	Diesel/Gas oil	
OVERVIEW OF PROPULSION SYSTEM AND ELECTRICITY SUPPLY SYSTEM		See section 4
SHAFT GENERATORS		
Type & manufacturer	None	
Rated electrical output power		
Number of set	0	
SHAFT MOTORS		

Parameter	Value	Reference
Type & manufacturer	None	
Rated power consumption		
Efficiency		
Number of set	0	
MAIN GENERATORS		
Type & manufacturer	BUILDER AC120	
Rated output	605 kWe	
Efficiency	0.93	
Number of set	3	
PROPULSION SHAFT		
Propeller diameter	5.9 m	
Propeller number of blades	4	
Voluntarily limited shaft propulsion power	No	
Number of set	1	
ENERGY SAVING EQUIPMENT		See section 9
Description of energy saving equipment	Propeller boss cap fins	
Power reduction or power output	None	

2.2 Preliminary verification of attained EEDI

Parameter	Value	Reference
TOWING TANK TEST ORGANIZATION		
Identification of organization	TEST corp.	See section 6.
ISO Certification or previous experience?	Previous experience	
TOWING TANK TESTS		
Exemption of towing tank tests	No	
Process and methodology of estimation of the power curves		See section 7
Ship model information		See subparagraph 7.2.1
Propeller model information		See subparagraph 7.2.2
EEDI & sea trial loading conditions	EEDI: mean draft: 12.7 m Trim 0 Sea trial (ballast): mean draft: 5.8 m Trim 2.6 m by stern	
Propeller open water diagram (model, ship)		See paragraph 7.4
Experience based parameters		See paragraph 7.3
Power curves at full scale		See section 3
Ship Reference speed	14.25 knots	
ELECTRIC POWER TABLE (as necessary, as defined in IMO EEDI Calculation Guidelines)	Significant difference from 2.5.6 of IMO EEDI Calculation Guidelines	See section 5
CALCULATION OF ATTAINED EEDI	5.06	See section 11
CALCULATION OF REQUIRED EEDI	5.27	See section 12
CALCULATION OF ATTAINED $EEDI_{weather}$	Not calculated	See section 13

2.3 Final verification of attained EEDI

Parameter	Value	Reference
SEA TRIAL LOADING CONDITION		
POWER CURVES		See section 3
Sea trial report with corrections		See section 15
Ship Reference speed	14.65 knots	
FINAL DEADWEIGHT		See section 14
Displacement	66 171 tons	
Lightweight	11 621 tons	
Deadweight	54 550 DWT	
FINAL ATTAINED EEDI	4.96	See section 16

3 POWER CURVES

The power curves estimated at the design stage and modified after the sea trials are given in Figure 3.1.

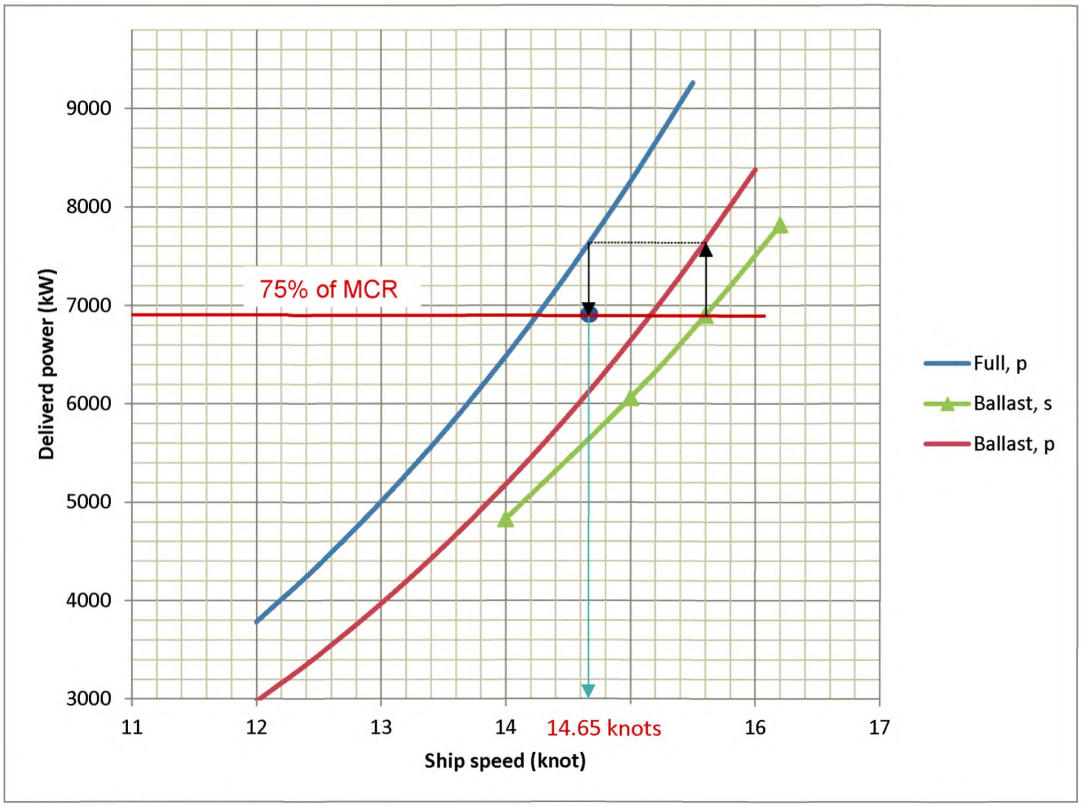

Figure 3.1: Power curves

4 OVERVIEW OF PROPULSION SYSTEM AND ELECTRIC POWER SYSTEM

Figure 4.1 shows the connections within the propulsion and electric power supply systems.

The characteristics of the main engines, auxiliary engines, electrical generators and propulsion electrical motors are given in table 2.1.

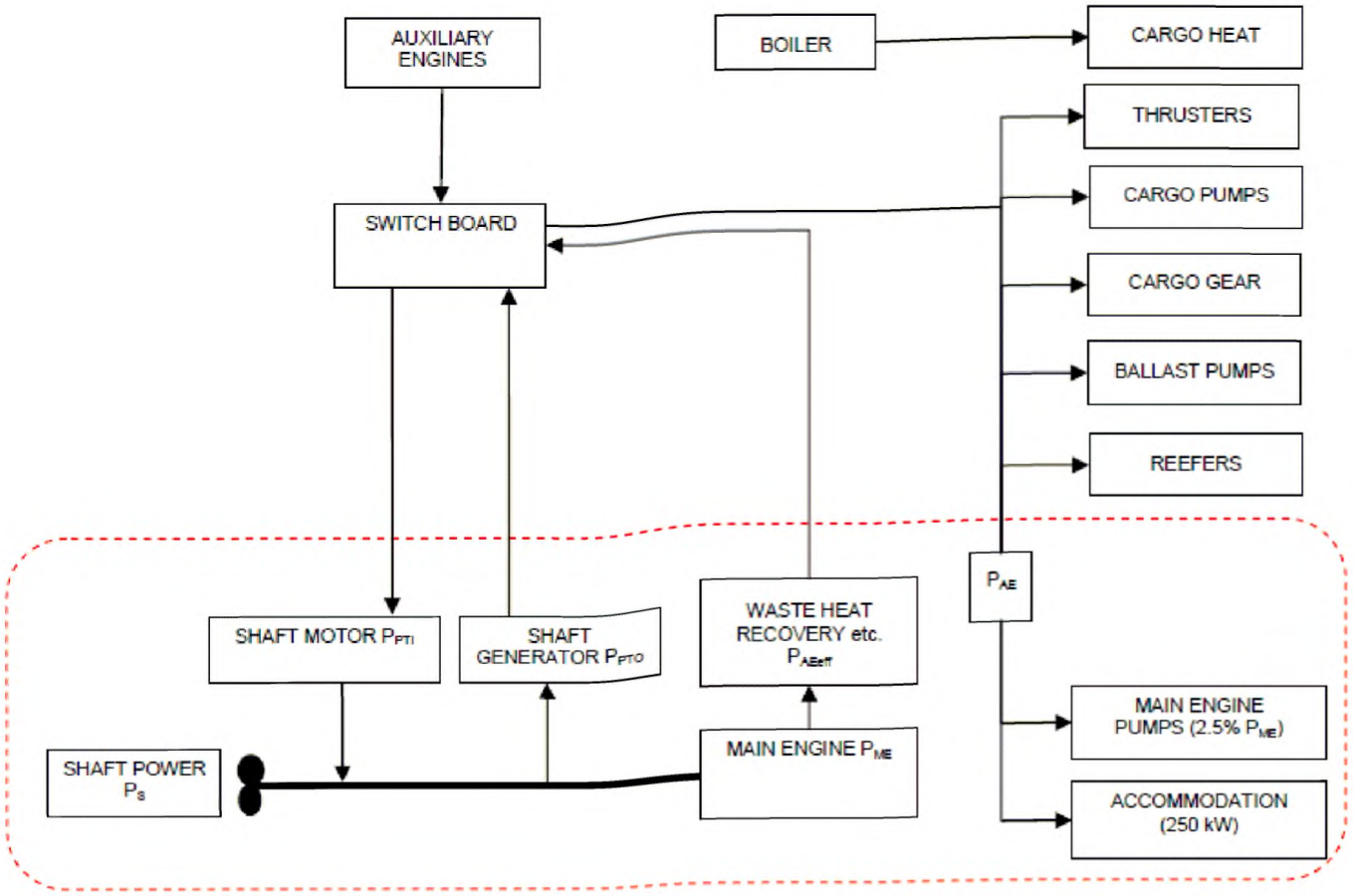

Figure 4.1 scheme of the propulsion and power generation systems

5 ELECTRIC POWER TABLE

The electric power for the calculation of EEDI is provided in table 5.1.

Id	Group	Description	Mech. Power "Pm"	El. Motor output	Efficien. "e"	Rated el. Power "Pr"	load factor "kl"	duty factor "kd"	time factor "kt"	use factor "ku"	Necessary power "Pload"
1	A	STEERING GEAR	N.A.	N.A.	N.A.	45,0	0,9	1	0,3	0,27	12.2
2	A	HULL CATHODIC PROTECTION	N.A.	N.A.	N.A.	10	1	1	1	1,00	10,0
3	A	CRANE	N.A.	N.A.	N.A.	10,00	0,2	1	1	0,20	2,0
4	A	COMPASS	N.A.	N.A.	N.A.	0,5	1	1	1	1,00	0,5
5	A	RADAR NO.1	N.A.	N.A.	N.A.	1,3	1	0,5	1	0,50	0,7
6	A	RADAR NO.2	N.A.	N.A.	N.A.	1,3	1	0,5	1	0,50	0,7
7	A	NAVIGATION EQUIPMENT	N.A.	N.A.	N.A.	5,0	1	1	1	1,00	5,0
8	A	INTERNAL COMM. EQUIPMENT	N.A.	N.A.	N.A.	2,5	1	1	0,1	0,10	0,2
9	A	RADIO EQUIPMENT	N.A.	N.A.	N.A.	3,5	1	1	0,1	0,10	0,4
10	A	MOORING EQ.	N.A.	N.A.	N.A.	7,0	1	1	0,1	0,10	0,7
11	B	MAIN COOLING SEA WATER PUMP NO.1	28,0	30	0,925	30,3	0,9	0,66	1	0,59	18,0
12	B	MAIN COOLING SEA WATER PUMP NO.2	28,0	30	0,925	30,3	0,9	0,66	1	0,59	18,0
13	B	MAIN COOLING SEA WATER PUMP NO.3	28,0	30	0,925	30,3	0,9	0,66	1	0,59	18,0
14	B	LT COOLING FW PUMP NO.1	28,0	30	0,925	30,3	0,9	0,66	1	0,59	18,0
15	B	LT COOLING FW PUMP NO.2	28,0	30	0,925	30,3	0,9	0,66	1	0,59	18,0
16	B	LT COOLING FW PUMP NO.3	28,0	30	0,925	30,3	0,9	0,66	1	0,59	18,0
17	B	M/E COOLING WATER PUMP NO.1	13,0	15	0,9	14,4	1	0,5	1	0,50	7,2
18	B	M/E COOLING WATER PUMP NO.2	13,0	15	0,9	14,4	1	0,5	1	0,50	7,2
19	C	MAIN LUB. OIL PUMP NO.1	55,0	90	0,94	58,5	0,9	0,5	1	0,45	26,3

Id	Group	Description	Mech. Power "Pm"	El. Motor output	Efficien. "e"	Rated el. Power "Pr"	load factor "kl"	duty factor "kd"	time factor "kt"	use factor "ku"	Necessary power "Pload"
20	C	MAIN LUB. OIL PUMP NO.2	55,0	90	0,94	58,5	0,9	0,5	1	0,45	26,3
21	C	H.F.O. TRANSFER PUMP	6,0	7,5	0,88	6,8	1	1	0,1	0,10	0,7
22	C	D.O. TRANSFER PUMP	6,0	7,5	0,88	6,8	1	1	0,1	0,10	0,7
23	C	L.O. TRANSFER PUMP	1,4	2,5	0,8	1,8	1	1	0,1	0,10	0,2
24	C	TECHNICAL FRESH WATER PUMP NO.1	2,5	3,5	0,85	2,9	1	0,5	0,1	0,05	0,1
25	C	TECHNICAL FRESH WATER PUMP NO.2	2,5	3,5	0,85	2,9	1	0,5	0,1	0,05	0,1
26	C	E/R SUPPLY FAN NO.1	14,0	20	0,9	15,5	0,9	1	1	0,90	14,0
27	C	E/R SUPPLY FAN NO.2	14,0	20	0,9	15,5	0,9	1	1	0,90	14,0
28	C	E/R SUPPLY FAN NO.3	14,0	20	0,9	15,5	0,9	1	1	0,90	14,0
29	C	E/R SUPPLY FAN NO.4	14,0	20	0,9	15,5	0,9	1	1	0,90	14,0
30	C	PURIFIER ROOM EXH.VENTILATOR	2,5	3	0,82	3,0	0,9	1	1	0,90	2,7
31	C	PUMP HFO SUPPLY UNIT NO.1	2,1	3	0,8	2,6	0,9	0,5	1	0,45	1,2
32	C	PUMP HFO SUPPLY UNIT NO.2	2,1	3	0,8	2,6	0,9	0,5	1	0,45	1,2
33	C	CIRC. PUMP FOR HFO SUPPLY UNIT NO.1	2,8	3,5	0,84	3,3	0,9	0,5	1	0,45	1,5
34	C	CIRC. PUMP FOR HFO SUPPLY UNIT NO.2	2,8	3,5	0,84	3,3	0,9	0,5	1	0,45	1,5
35	C	H.F.O. SEPARATOR NO.1	N.A.	N.A.	N.A.	6,5	0,9	0,5	0,9	0,41	2,6
36	C	H.F.O. SEPARATOR NO.2	N.A.	N.A.	N.A.	6,5	0,9	0,5	0,9	0,41	2,6
37	C	MAIN AIR COMPRESSER NO.1	N.A.	N.A.	N.A.	43,0	1	0,5	0,1	0,05	2,2
38	C	MAIN AIR COMPRESSER NO.2	N.A.	N.A.	N.A.	43,0	1	0,5	0,1	0,05	2,2
39	C	SERVICE AIR COMPRESSER	N.A.	N.A.	N.A.	22,0	1	1	0,1	0,10	2,2
40	C	VENT. AIR SUPPLY	N.A.	N.A.	N.A.	1,0	1	1	0,5	0,50	0,1
41	C	BILGE WATER SEPARATOR	N.A.	N.A.	N.A.	1,5	1	1	0,1	0,10	0,2
42	C	M/E L.O. SEPARATOR	N.A.	N.A.	N.A.	6,5	0,9	1	0,2	0,18	1,2
43	C	G/E L.O. SEPARATOR	N.A.	N.A.	N.A.	6,5	0,9	1	0,2	0,18	1,2
44	D	HYDROPHORE PUMP NO.1	2,8	4	0,84	3,3	1	0,5	0,1	0,05	0,2
45	D	HYDROPHORE PUMP NO.2	2,8	4	0,84	3,3	1	0,5	0,1	0,05	0,2
46	D	HOT WATER CIRCULATING PUMP NO.1	0,5	1,0	0,8	0,8	1	0,5	0,2	0,10	0,1
47	D	HOT WATER CIRCULATING PUMP NO.2	0,5	1,0	0,8	0,8	1	0,5	0,2	0,10	0,1
48	E	E/R WORKSHOP WELDING SPACE EXH.	0,5	0,8	0,8	0,6	0,9	1	1	0,90	0,6
49	F	ECR COOLER UNIT	N.A.	N.A.	N.A.	4,2	1	1	0,5	0,50	2,1
50	F	FAN FOR AIR CONDITIONING PLANT	N.A.	N.A.	N.A.	8,0	0,9	1	0,5	0,45	3,6
51	F	COMP. AIR CONDITIONING PLANT NO.1	N.A.	N.A.	N.A.	10,0	0,9	1	0,5	0,45	4,5
52	F	COMP. AIR CONDITIONING PLANT NO.2	N.A.	N.A.	N.A.	10,0	0,9	1	0,5	0,45	4,5
53	F	COMP. AIR CONDITIONING PLANT NO.3	N.A.	N.A.	N.A.	10,0	0,9	1	0,5	0,45	4,5
54	F	COMP. AIR CONDITIONING PLANT NO.4	N.A.	N.A.	N.A.	10,0	0,9	1	0,5	0,45	4,5
55	G	FAN FOR GALLEY AIR COND. PLANT	N.A.	N.A.	N.A.	1,5	0,9	1	0,5	0,45	0,7
56	G	COMP. FOR GALLEY AIR COND. PLANT	N.A.	N.A.	N.A.	3,5	0,9	1	0,5	0,45	1,6
57	G	REF. COMPRESSOR NO.1	N.A.	N.A.	N.A.	4,0	1	0,5	0,1	0,05	0,2
58	G	REF. COMPRESSOR NO.2	N.A.	N.A.	N.A.	4,0	1	0,5	0,1	0,05	0,2
59	G	GALLEY EQUIPMENT	N.A.	N.A.	N.A.	80,0	0,5	1	0,1	0,05	4,0
60	H	VAC. COLLECTION SYSTEM	2,4	3,0	0,8	3,0	1	1	1	1,00	3,0
61	H	GALLEY EXH.	1,2	1,5	0,8	1,5	1	1	1	1,00	1,5
62	H	LAUNDRY EXH.	0,1	0,15	0,8	0,1	1	1	1	1,00	0,1
63	H	SEWAGE TREATMENT	N.A.	N.A.	N.A.	4,5	1	1	0,1	0,10	0,5

Id	Group	Description	Mech. Power "Pm"	El. Motor output	Efficien. "e"	Rated el. Power "Pr"	load factor "kl"	duty factor "kd"	time factor "kt"	use factor "ku"	Necessary power "Pload"
64	H	SEWAGE DISCHARGE	3	7,5	0,88	3,4	0,9	1	0,1	0,09	0,3
65	I	ACCOMMODATION LIGHTING	N.A.	N.A.	N.A.	16,0	1	1	0,5	0,5	8,0
66	I	E/R LIGHTING	N.A.	N.A.	N.A.	18,0	1	1	1	1,00	18,0
67	I	NAVIGATION LIGHTING	N.A.	N.A.	N.A.	0,9	1	0,5	1	0,50	0,4
68	I	BACK. NAV. LIGHTING	N.A.	N.A.	N.A.	0,9	1	0,5	1	0,50	0,4
								TOTAL POWER			354,0
P_{AE} = Total Power / (average efficiency of generators) = 354/0.93 = 381 kW											

Table 5.1: Electric power table for calculation of PAE

6 TOWING TANK TEST ORGANIZATION QUALITY SYSTEM

Towing tank tests will be performed in TEST corp.

The quality control system of the towing tank test organization TEST corp. has been documented previously (see report 100 for the ship hull No. 12345) and the quality manual and calibration records are available to the verifier.

The measuring equipment has not been modified since the issue of report 100 and is listed in table 6.1.

	Manufacturer	Model	Series	Lab. Id.	status
Propeller dynamometer	B&N	6001	300	125-2	Calibrated 01/01/2011
...					

Table 6.1: List of measuring equipment

7 ESTIMATION PROCESS OF POWER CURVES AT DESIGN STAGE

7.1 Test procedure

The tests and their analysis are conducted by TEST corp. applying their standard correlation method (document is given in annex 1).

The method is based on thrust identity and references ITTC Recommended Procedure 7.5 - 02 - 03 -1.4 ITTC 1978 Trial Prediction Method (in its latest reviewed version of 2011), with prediction of the full scale rpm and delivered power by use of the $C_P - C_N$ correction factors.

The results are based on a Resistance Test, a Propulsion Test and use the Open Water Characteristics of the model propeller used during the tests and the Propeller Open Water Characteristics of the final propeller given in 7.4.

Results of the resistance tests and propulsion tests of the ship model are given in the report of TEST corp. given in annex 2.

7.2 Speed prediction

The ship delivered power P_D and rate of revolutions n_S are determined from the following equations:

$$P_D = C_P . P_{DS}$$
$$n_T = C_N . n_S$$

Where C_N and C_P are experience-based factors and P_{DS} (resp. n_S) are the delivered power (resp. rpm) obtained from the analysis of the towing tank tests.

The ship total resistance coefficient C_{TS} is given by:

$$C_{TS} = \frac{S_S + S_{BK}}{S_S}.[(1+k).C_{FS} + \Delta C_F] + C_R + C_{AAS} + C_{AppS}$$

Where:

S_S: ship hull wetted surface, here 9886 m^2

S_{BK}: wetted surface of bilge keels

k: form factor. Here 1+k = 1.38 over the speed range, determined according to ITTC standard procedure 7.5-02-02-01

C_{FS}: ship frictional resistance coefficient (computed according to ITTC 1957 formula)

ΔC_F: roughness allowance, computed according to Bowden-Davison formula. Here ΔC_F = 0.000339

C_R: residual resistance coefficient

C_{AAS}: air resistance coefficient

C_{AppS}: ship appendages (propeller boss cap fins) resistance coefficient, computed as provided in annex 2.

The air resistance coefficient is computed according to the following formula:

$$C_{AAS} = C_{DA}.\frac{\rho_A.A_{VS}}{\rho_S.S_S}$$

Where:

C_{DA} is the air drag coefficient, here 0.8

ρ_A and ρ_S are the air density and water density, respectively

A_{VS} is the projected wind area, here 820 m^2

$C_{AAS} = 7.9.10^{-5}$

The delivered power P_D results of the towing tank tests are summarized in table 7.1 for the EEDI condition (scantling draft) and in table 7.2 for the sea trial condition (light ballast draft).

Model reference: SX100 - model scale: 40					
Loading condition: EEDI loading condition (12.70 m draft)					
Resistance test: R001		Propulsion test: P001		Model propeller: Prop01	
Ship speed V (knot)	Wake factor w_{TM}-w_{TS}	Propeller thrust T_S (kN)	Propeller torque Q_S (kNm)	rpm on ship n_S	Delivered Power P_D (kW)
12	0.098	522	467	78	3781
12.5	0.093	578	514	82	4362
13	0.089	638	563	86	5004
13.5	0.081	701	615	90	5710
14	0.079	768	669	93	6486
14.5	0.086	838	727	97	7333
15	0.091	912	786	101	8257
15.5	0.099	990	849	105	9261
Experience-based factor C_P: 1.01					
Experience based factor C_N: 1.02					

Table 7.1: results of trial prediction in EEDI condition

Model reference: SX100 - model scale: 40					
Loading condition: Sea trial condition (5.80 m draft)					
Resistance test: R002		Propulsion test: POO2		Model propeller: Prop01	
Ship speed V (knot)	Wake factor w_{TM}-w_{TS}	Propeller thrust T_S (kN)	Propeller torque Q_S (kNm)	rpm on ship n_S	Delivered Power P_D (kW)
12	0,079	406	379	72	2974
12,5	0,081	451	418	76	3445
13	0,083	500	459	79	3968
13,5	0,085	551	503	83	4545
14	0,087	606	549	87	5181
14,5	0,088	664	597	90	5878
15	0,091	725	648	94	6641
15,5	0,089	790	701	98	7474
Experience-based factor C_P: 1.05					
Experience based factor C_N: 1.03					

Table 7.2: results of trial prediction in sea trial condition

The predicted results are represented on the speed curves given in Figure 3.1. The EEDI condition results are indexed (Full, p), the sea trial condition results (Ballast, p).

7.3 Ship and propeller models

The ship model is at scale λ = 40. The characteristics are given in table 7.3.

Identification (model number or similar)	SX 100
Material of construction	Wood
Principal dimensions	
Length between perpendiculars (L_{PP})	4.625 m
Length of waterline (L_{WL})	4.700 m
Breadth (B)	0.806 m
Draught (T)	0.317 m
Design displacement (Δ) (kg, fresh water)	1008.7 kg
Wetted surface area	6.25 m^2
Details of turbulence stimulation	Sand strips
Details of appendages	rudder
Tolerances of manufacture	+/- 2.5 mm on length +/- 1 mm on breadth

Table 7.3: characteristics of the ship model

The propeller model used during the tests is a stock model with the following characteristics:

Identification (model number or similar)	Prop01
Materials of construction	aluminium
Blade number	4
Principal dimensions	
Diameter	147.5 mm
Pitch-Diameter Ratio (P/D)	0.68
Expanded blade Area Ratio (A_E/A_0)	0.60
Thickness Ratio (t/D)	0.036
Hub/Boss Diameter (d_h)	25 mm
Tolerances of manufacture	Diameter (D): ± 0.10 mm Thickness (t): ± 0.10 mm Blade width (c): ± 0.20 mm Mean pitch at each radius (P/D): ± 0.5% of design value.

Table 7.4: characteristics of the stock propeller used during the tests

7.4 Open water characteristics of propeller

The open water characteristics of the stock model propeller are given in annex 2. The open water characteristics of the ship propeller are given in Figure 7.1.

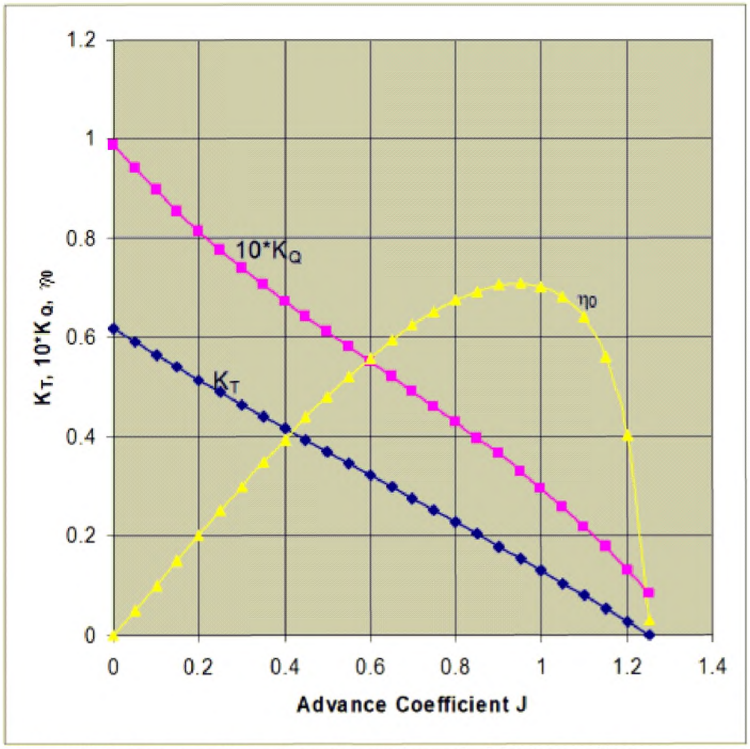

Figure 7.1: open water characteristics of ship propeller

8 LINES AND OFFSETS OF THE SHIP

The ships lines and offsets table are given in Annex 3.

9 DESCRIPTION OF ENERGY SAVING EQUIPMENT

9.1 Energy saving equipment of which effects are expressed as $P_{AEeff}(i)$ and/or $P_{eff}(i)$ in the EEDI calculation formula

None here.

9.2 Other energy saving equipment

The propeller boss cap fins are described in annex 4.

10 JUSTIFICATION OF SFC (DOCUMENTS ATTACHED TO NO_X TECHNICAL FILE OF THE PARENT ENGINE)

10.1 Main engine

The shop test report for the parent main engine is provided in annex 5.1. The SFOC has been corrected to ISO conditions.

10.2 Auxiliary engine

The technical file of the EIAPP certificate of the auxiliary engines is provided in annex 5.2. The SFOC has been corrected to ISO conditions.

11 CALCULATION OF ATTAINED EEDI AT DESIGN STAGE

11.1 Input parameters and definitions

The EEDI quantities and intermediate calculations are listed in table 11.1:

EEDI quantity	Value	Remarks
C_{FME}	3.206	Marine Diesel oil is used for shop test of the main engine
P_{ME}	6 900 kW	No shaft generator installed (P_{PTO} = 0) MCR is 9200 kW PME = 0.75x9200 = 6 900 kW
SFC_{ME}	171 g/kWh	According to parent engine shop test report in ISO conditions (see 10.1)
CF_{AE}	3.206	Marine diesel oil is used for shop test of the auxiliary engine
P_{PTI}	0	No shaft motor installed
P_{AE}	381 kW	MCR of the engine is 9200 kW, less than 10000kW $P_{AE} = 0.05.(\sum_{i=1}^{nME} MCR_{MEi} + \frac{\sum_{i=1}^{nPTI} P_{PTI(i)}}{0.75})$ P_{AE} = 0.05*9200 = 460 kW According to electric power table included in table 5.1, ∑Pload(i) = 354 kW The weighted average efficiency of generators = 0.93 (KWelec/kWmech) P_{AE} = ∑Pload(i) / 0.93 = 381 kW The difference (460 – 381) KW is expected to vary EEDI by slightly more than 1%, so 381 kW is considered.
SFC_{AE}	205 g/kWh	According to technical file of EIAPP certificate in ISO conditions (see 10.2)
P_{eff}	0	No mechanical energy efficient devices The propeller boss cap fins act by reducing ship resistance
P_{AEeff}	0	No auxiliary power reduction
f_{eff}		Not relevant here (see above)
f_j	1.0	The ship is a bulk carrier without ice notations. fj = 1.0
f_i	1.017	No ice notation f_{iICE} = 1.0 No voluntary structural enhancement for this ship f_{iVSE} = 1.0 The ship has the notation Bulk carrier CSR: $f_{iCSR} = 1 + 0.08*LWT_{CSR} / DWT_{CSR}$ = 1+0.08*11590/55000 = 1.017 fi = f_{iICE} x f_{iVSE} x f_{iCSR} = 1.017
f_w	1.0	For attained EEDI calculation under regulation 20 and 21 of MARPOL Annex VI, f_w is 1.0
f_c	1.0	The ship is a bulk carrier f_c = 1.0
Capacity	55000	For a bulk carrier, Capacity is deadweight = 55 000 tons
V_{ref}	14.25 knots	At design stage, reference speed is obtained from the towing tank test report and delivered power in scantling draft (EEDI) condition is given in table 7.1 In table 7.1 P_D = 1.0 x P_{ME} = 6900 kW The reference speed is read on the speed curve corresponding to table 7.1 at intersection between curve *Full, p* and 6900 kW V_{ref} = 14.25 knots

Table 11.1: Parameters in attained EEDI calculation

11.2 Result

For this vessel, Attained EEDI is:

$$\frac{(\prod_{j=1}^{n} f_j).(\sum_{i=1}^{nME} P_{ME(i)}.C_{FME(i)}.SFC_{ME(i)}) + P_{AE}.C_{FAE}.SFC_{AE} + \{(\prod_{j=1}^{n} f_j).\sum_{i=1}^{nPTI} P_{PTI(i)} - \sum_{i=1}^{neff} f_{eff(i)}.P_{AEeff(i)}\}.C_{FAE}.SFC_{AE} - \sum_{i=1}^{neff} f_{eff(i)}.P_{eff(i)}.C_{FME}.SFC_{ME})}{f_i.f_c.Capacity.f_w.V_{ref}}$$

Attained EEDI = (6900*3.206*171+381*3.206*205) / (1.017*55000*14.25) = 5.06 g/t.nm

12 REQUIRED EEDI

According to MARPOL Annex VI, Chapter 4, Regulation 21, the required EEDI is:
(1-x/100) x reference line value
The reference line value = $a*b^{-c}$ where a, b, c are given for a bulk carrier as:
a= 961.79 b = deadweight of the ship c = 0.477

So reference line value = 5.27 g/t.nm
In Phase 0 (between 1 Jan 2013 and 31 Dec 2014) above 20000 DWT, x = 0
So Required EEDI = 5.27 g/t.nm

Figure 12.1 provides the relative position of attained EEDI with reference to required value.

As a conclusion, for this vessel:

- attained EEDI = 5.06 g/t.nm
- required EEDI = 5.27 g/t.nm
- **Regulation criteria is satisfied with 4% margin**

R

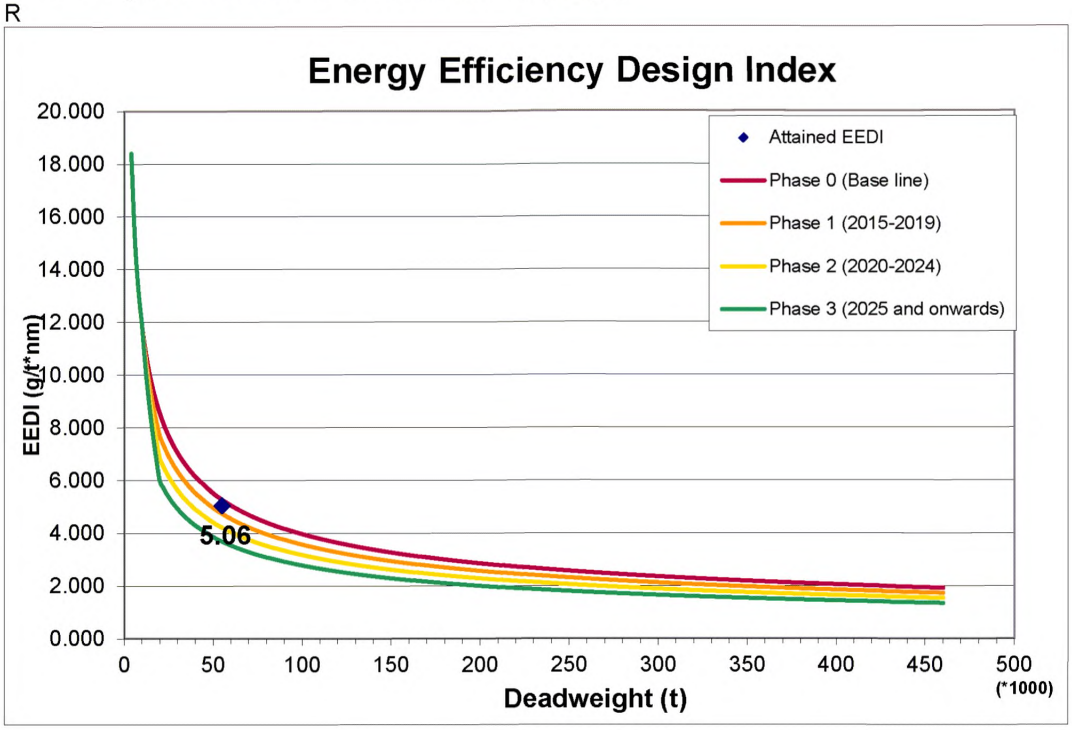

Figure 12.1: Required EEDI value

13 CALCULATION OF ATTAINED $EEDI_{WEATHER}$

Not calculated.

14 LIGHTWEIGHT CHECK REPORT

The lightweight check report is provided in annex 6. The final characteristics of the ship are:

Displacement	66 171 tons
Lightweight	11 621 tons
Deadweight	54 550 DWT

15 SEA TRIAL REPORT WITH CORRECTIONS

The sea trial report is provided in annex 7. The results of the sea trial after corrections by BSRA and ITTC standard methods are given on curve *Ballast,s* on Figure 3.1.

16 CALCULATION OF ATTAINED EEDI AT FINAL STAGE

16.1 Recalculated values of parameters

The EEDI quantities and intermediate calculations are listed in table 16.1. Parameters which have not been modified from the preliminary verification stage are marked "no change".

EEDI quantity	Value	Remarks
C_{FME}	3.206	No change
P_{ME}	6 900 kW	No change
SFC_{ME}	171 g/kWh	No change
CF_{AE}	3.206	No change
P_{PTI}	0	No change
P_{AE}	381 kW	The electric power table has been validated and endorsed (see the electric power table form in annex 8)
SFC_{AE}	205 g/kWh	No change
P_{eff}	0	No change
P_{AEeff}	0	No change
f_{eff}		No change
f_j	1.0	No change
f_i	1.017	Deadweight and lightweight are computed from lightweight check: f_{iCSR} = 1 + 0.08*LWT_{CSR} / DWT_{CSR} = 1+0.08*11621/54550 = 1.017 fi = f_{iICE} x f_{iVSE} x f_{iCSR} = 1.017 (unchanged)
f_c	1.0	No change
Capacity	54550 DWT	Deadweight has been computed from the lightweight check. See 14.
V_{ref}	14.65 knots	The reference speed in EEDI condition has been adjusted according to the delivered power adjustment methodology defined in Industry Guidelines. The reference speed is read on the speed curves diagram in Figure 3.1 V_{ref} = 14.65 knots

Table 11.1: Parameters in attained EEDI calculation (final stage)

16.2 Final result

Attained EEDI = (6900*3.206*171+381*3.206*205) / (1.017*54550*14.65) = 4.96 g/t.nm

Required EEDI in Phase 0: $961.79*54550^{-0.477}$ = 5.29 g/t.nm

Regulation criteria is satisfied with 6% margin

List of annexes to the Document

Annex 1	Standard model-ship extrapolation and correlation method
Annex 2	Towing tank tests report
Annex 3	Ship lines and offsets table
Annex 4	Description of energy saving equipment
Annex 5	5.1 NO_x Technical File of main engine(s) 5.2 NO_x Technical File of auxiliary engines
Annex 6	Lightweight check report
Annex 7	Sea trials report
Annex 8	EPT-EEDI form

APPENDIX 3
Verifying the calibration of model test equipment

Quality Control System

The existence of a Quality Control System is not sufficient to guarantee the correctness of the test procedures; QS, including ISO 9000, only give documentary evidence what is to be and has been done. Quality Control Systems do not evaluate the procedures as such.
The Test institute is to have a quality control system (QS). If the QS is not certified ISO 9000 a documentation of the QS is to be shown. A Calibration Procedure is given in ITTC Recommended Procedures 7.6-01-01

1. Measuring Equipment

An important aspect of the efficient operation of Quality System according to measuring equipment is a full identification of devices used for the tests.
Measuring equipment instruments are to have their individual records in which the following data are to be placed:
- name of equipment
- manufacturer
- model
- series
- laboratory identification number (optionally)
- status (verified, calibration, indication)

Moreover the information about the date of last and next calibration or verification is to be placed on this record. All the data are to be signed by authorised officer.

2. Measuring Standards

Measuring standards used in laboratory for calibration purposes are to be confirmed (verified) by Weights and Measures Office at appropriate intervals (defined by the Weights and Measures Office).
All measuring standards used in laboratory for the confirmation purposes are to be supported by certificates, reports or data sheets for the equipment confirming the source, uncertainty and conditions under which the results were obtained.

3. Calibration

The calibration methods may differ from institution to institution, depending on the particular measurement equipment. The calibration shall comprise the whole measuring chain (gauge, amplifier, data acquisition system etc.).
The laboratory shall ensure that the calibration tests are carried out using certified measuring standards having a known valid relationship to international or nationally recognised standards.

a) Calibration Report

"Calibration reports" shall include:
- identification of certificate for measuring standards
- description of environmental conditions

- calibration factor or calibration curve
- uncertainty of measurement
- minimum and maximum capacity" for which the error of measuring instrument is within specified (acceptable) limits.

b) Intervals of Confirmation

The measuring equipment (including measuring standards) is to be confirmed at appropriate (usually periodical) intervals, established on the basis of their stability, purpose and wear. The intervals are to be such that confirmation is carried out again prior to any probable change in the equipment accuracy, which is important for the equipment reliability. Depending on the results of preceding calibrations, the confirmation period may be shortened, if necessary, to ensure the continuous accuracy of the measuring equipment.
The laboratory is to have specific objective criteria for decisions concerning the choice of intervals of confirmation.

c) Non - Conforming Equipment

Any item of measuring equipment
- that has suffered damage,
- that has been overloaded or mishandled,
- that shows any malfunction,
- whose proper functioning is subject to doubt,
- that has exceeded its designated confirmation interval, or
- the integrity of whose seal has been violated, is to be removed from service by segregation, clear labelling or cancelling.

Such equipment is not to be returned to service until the reasons for its nonconformity have been eliminated and it is confirmed again.
If the results of calibration prior to any adjustment or repair were such as to indicate a risk of significant errors in any of the measurements made with the equipment before the calibration, the laboratory shall take the necessary corrective action.

4. Instrumentation

Especially the documentation on the calibration of the following Instrumentation is to be shown.

a) Carriage Speed

The carriage speed is to be calibrated as a distance against time. Period between the calibrations is to be in accordance with the internal procedure of the towing tank test organisation.

b) Water Temperature

Measured by calibrated thermometer with certificate (accuracy 0.1°C).

c) Trim Measurement

Calibrated against a length standard. Period between the calibrations is to be in accordance with the internal procedure of the towing tank test organisation.

d) Resistance Test

Resistance Test is a force measurement. It is to be calibrated against a standard weight. Calibration normally before each test series.

e) Propulsion Test

During Self Propulsion Test torque, thrust and rate of revolutions are measured. Thrust and Torque are calibrated against a standard weight. Rate of revolution is normally measured by a pulse tachometer and an electronic counter which can be calibrated e.g. by an oscillograph.
Period between the calibrations is to be in accordance with the internal procedure of the towing tank test organisation.

f) Propeller Open Water Test

During Propeller Open Water Test torque, thrust and rate of revolutions are measured. Thrust and Torque are calibrated against a standard weight. Rate of revolution is normally measured by a pulse tachometer and an electronic counter which can be calibrated e.g. by an oscillograph.
Period between the calibrations is to be in accordance with the internal procedure of the towing tank test organisation.

Examples of documentation sheets are given in the Annexes 1 and 2:

ANNEX 1: SAMPLE OF MEASURING EQUIPMENT CARD

QM 4.10.5. 1

Measurement Equipment Card

Laboratory Identification Number

Equipment

Manufacturer
Serial No.

Model
Date of Purchase

Basic range

Work Instructions
Calibration Instructions
Verified at

Status
Calibrated
Indication
Verified

Date of Check	Certificate. No.	Period	Date of Next Check	Responsible	Department	Approval

ANNEX 2: SAMPLE OF CALIBRATION CERTIFICATE.

QM 4.10.6.2	**CALIBRATION CERTIFICATE for** PROPELLER		**NO.**		
			LIN		
Calibration Instructions			Calibrated by :		
Date of calibration			Checked by :		
Measurement combination					
DYNAMOMETER	Manufacturer		Model		
LIN	Serial No		Date of purchased		
	Work instruction		Last calibration		
Cable					
AMPLIFIER	Manufacturer		Model		
L	Serial No		Date of purchased		
	Work instruction		Type of transducer		
	Excitation		Frequency of excit.		
Thrust :	Amp. gain		Zero not load		
Torque :	Amp. gain		Zero not load		
Cable					
A/C TRANSDUCER	Manufacturer		Model		
L	Serial No		Date of purchased		
	Work instruction		Certificate No		
MEASUREMENT STANDARDS	Mass		Certificate No		
	Length arm of force		Certificate No		
	Voltmeter		Certificate No		

QM
4.10.6.2

CALIBRATION RESULTS

Environmental condition

Place of test :				
Temperature :	initial		final	
Dampness :	initial		final	

Computation results of calibrations test

Executed program	procedure	certificate NO.

	Thrust	Torque
Drift :		
Non Linearity errors :		
Hysteresis :		
Precision errors :		
Total uncertainty :		
Calibration factor :		

Calibration requests :

Specified limits of	Thrust	Torque
errors :		
Maximum capacity :		
Minimum capacity :		

Note : tests and computations results are included in report

Prepared by : ..... Approved by : ..... Date : .....

APPENDIX 4
Review and witnessing of model test procedures

The Model Tests is to be witnessed by the verifier. Special attention is to be given to the following items:

1. Ship Model

Hydrodynamic Criteria

a) *Model Size:* The model should generally be as large as possible for the size of the towing tank taking into consideration wall, blockage and finite depth effects, as well as model mass and the maximum speed of the towing carriage (ITTC Recommended Procedure 7.5-02-02-01 Resistance Test).

b) *Reynolds Number:* The Reynolds Number is to be, if possible, above 2.5×10^5.

c) *Turbulence Stimulator:* In order to ensure turbulent flow, turbulence stimulators have to be applied.

Manufacture Accuracy

With regard to accuracy the ship model is to comply with the criteria given in ITTC Recommended Procedure 7.5-01-01-01, Ship Models.
The following points are to be checked:

a) *Main dimensions*, L_{PP}, B

b) *Surface finish*, model is to be smooth. Particular care is to be taken when finishing the model to ensure that geometric features such as knuckles, spray rails, and boundaries of transom sterns remain well-defined

c) *Stations and Waterlines* The spacing and numbering of displacement stations and waterlines are to be properly defined and accurately marked on the model.

d) *Displacement* The model is to be run at the correct calculated displacement. The model weight is to be correct to within 0.2% of the correct calculated weight displacement. In case the marked draught is not met when the calculated displacement has been established the calculation of the displacement and the geometry of the model compared to the ship has to be revised. (Checking the Offsets).

Documentation in the report

Identification (model number or similar)
Materials of construction
Principal dimensions
Length between perpendiculars (L_{PP})
Length of waterline (L_{WL})
Breadth (B)
Draught (T)
For multihull vessels, longitudinal and transverse hull spacing
Design displacement (Δ) (kg, fresh water)
Hydrostatics, including water plane area and wetted surface area
Details of turbulence stimulation
Details of appendages
Tolerances of manufacture

2. Propeller Model

The Manufacturing Tolerances of Propellers for Propulsion Tests are given IN ITTC Recommended Procedures 7.5-01-01-01, Ship Models Chapter 3.1.2. Attention: Procedure 7.5 – 01-02-02 Propeller Model Accuracy is asking for higher standards which are applicable for cavitation tests and not required for self-propulsion tests.

Propeller Model Accuracy

Stock Propellers

During the "stock-propeller" testing phase, the geometrical particulars of the final design propeller are normally not known. Therefore, the stock propeller pitch (in case of CPP) is recommended to be adjusted to the anticipated propeller shaft power and design propeller revolutions. (ITTC Recommended Procedure 7.5-02-03-01.1 Propulsion/Bollard Pull Test).

Adjustable Pitch Propellers

Before the Tests the pitch adjustment is to be controlled.

Final Propellers

Propellers having diameter (D) typically from 150 mm to 300 mm is to be finished to the following tolerances:
Diameter (D) ± 0.10 mm
Thickness (t) ± 0.10 mm
Blade width (c) ± 0.20 mm
Mean pitch at each radius (P/D): ± 0.5% of de-sign value.

Special attention is to be paid to the shaping accuracy near the leading and trailing edges of the blade section and to the thickness distributions. The propeller will normally be completed to a polished finish.

Documentation in the report

Identification (model number or similar)
Materials of construction
Principal dimensions
Diameter
Pitch-Diameter Ratio (P/D)
Expanded blade Area Ratio (A_E/A_0)
Thickness Ratio (t/D)
Hub/Boss Diameter (d_h)
Tolerances of manufacture

3. Model Tests

a) Resistance Test

The Resistance Test is to be performed acc. to ITTC Recommended Procedure 7.5-02-02-01 Resistance Test.

Documentation in the report

Model Hull Specification:
- Identification (model number or similar)
- Loading condition
- Turbulence stimulation method
- Model scale
- Main dimensions and hydrostatics (see ITTC Recommended Procedure 7.5-01-01-01 Ship Models and chapter 2 of this paper).

Particulars of the towing tank, including length, breadth and water depth
Test date
Parametric data for the test:
- Water temperature
- Water density
- Kinematic viscosity of the water
- Form factor (even if (1+k) =1.0 is applicable, this is to be stated)
- ΔC_F or C_A

For each speed, the following measured and extrapolated data is to be given as a minimum:

- Model speed
- Resistance of the model
- Sinkage fore and aft, or sinkage and trim

b) Propulsion Test

The Propulsion Test is to be performed acc. to ITTC Recommended Procedure 7.5-02-03-01.1 Propulsion Test/Bollard Pull.

Documentation in the report

Model Hull Specification:
- Identification (model number or similar)
- Loading condition
- Turbulence stimulation method
- Model scale
- Main dimensions and hydrostatics (see ITTC Recommended Procedure 7.5-01-01-01 Ship Models and chapter 2 of this paper).

Model Propeller Specification
- Identification (model number or similar)
- Model Scale
- Main dimensions and particulars (see ITTC Recommended Procedure 7.5-01-01-01 Ship Models and chapter 3 of this paper)

Particulars of the towing tank, including length, breadth and water depth
Test date
Parametric data for the test:
- Water temperature
- Water density
- Kinematic viscosity of the water
- Form factor (even if (1+k) = 1.0 is applicable, this is to be stated)
- ΔC_F or C_A
- Appendage drag scale effect correction factor (even if a factor for scale effect correction is not applied, this is to be stated).

For each speed the following measured data and extrapolated data is to be given as a minimum:
- Model speed
- External tow force
- Propeller thrust,
- Propeller torque
- Rate of revolutions.
- Sinkage fore and aft, or sinkage and trim

- The extrapolated values are also to contain the resulting delivered power P_D.

c) Propeller Open Water Test

In many cases the Propeller Open Water Characteristics of a stock propeller will be available and the Propeller Open Water Test need not be repeated for the particular project. A documentation of the Open Water Characteristics (Open Water Diagram) will suffice.
In case of a final propeller or where the Propeller Open Water Characteristics is not available the Propeller Open Water Test is to be performed acc. to ITTC Recommended Procedure 7.5-02-03-02.1 Open Water Test.

Documentation in the report

Model Propeller Specification:
- Identification (model number or similar)
- Model scale
- Main dimensions and particulars (see recommendations of ITTC Recommended Procedure 7.5-01-01-01 Ship Models and chapter 3 of this paper)
- Immersion of centreline of propeller shaft in the case of towing tank

Particulars of the towing tank or cavitation tunnel, including length, breadth and water depth or test section length, breadth and height.

Test date

Parametric data for the test:
- Water temperature
- Water density
- Kinematic viscosity of the water
- Reynolds Number (based on propeller blade chord at 0.7*R*)

For each speed the following data is to be given as a minimum:
- Speed
- Thrust of the propeller
- Torque of the propeller
- Rate of revolution
- Force of nozzle in the direction of the propeller shaft (in case of ducted propeller)

Propeller Open Water Diagram

4. Speed Trial Prediction

The principal steps of the Speed Trial Prediction Calculation are given in ITTC Recommended Procedure 7.5 - 02 - 03 -1.4 ITTC 1978 Trial Prediction Method (in its latest reviewed version of 2011). The main issue of a speed trial prediction is to get the loading of the propeller correct and also to assume the correct full scale wake. The right loading of the propeller can be achieved by increasing the friction deduction by the added resistance (e.g. wind resistance etc.) and run the self-propulsion test already at the right load or it can be achieved by calculation as given in Procedure 7.5-02-03-1.4.
A wake correction is always necessary for single screw ships. For twin screw ships it can be neglected unless the stern shape is of twin hull type or other special shape.
The following scheme indicates the main components of a speed trial prediction. It it to be based on a Resistance Test, a Propulsion Test and an Open Water Characteristics of the used model propeller during the tests and the Propeller Open Water Characteristics of the final propeller.

Documentation

Model Hull Specification:
- Identification (model number or similar)
- Loading condition
- Turbulence stimulation method
- Model scale
- Main dimensions and hydrostatics (see ITTC Recommended Procedure 7.5-01-01-01 Ship Models and chapter 2 of this paper).

Model Propeller Specification
- Main dimensions and particulars (see ITTC Recommended Procedure 7.5-01-01-01 Ship Models and chapter 3 of this paper)

Particulars of the towing tank, including length, breadth and water depth
Resistance Test Identification (Test No. or similar)
Propulsion Test Identification (Test No. or similar)
Open Water Characteristics of the model propeller
Open Water Characteristics of ship propeller
Ship Specification:
- Projected wind area
- Wind resistance coefficient
- Assumed BF
- C_P and C_n

Principle Scheme for Speed Trial Prediction

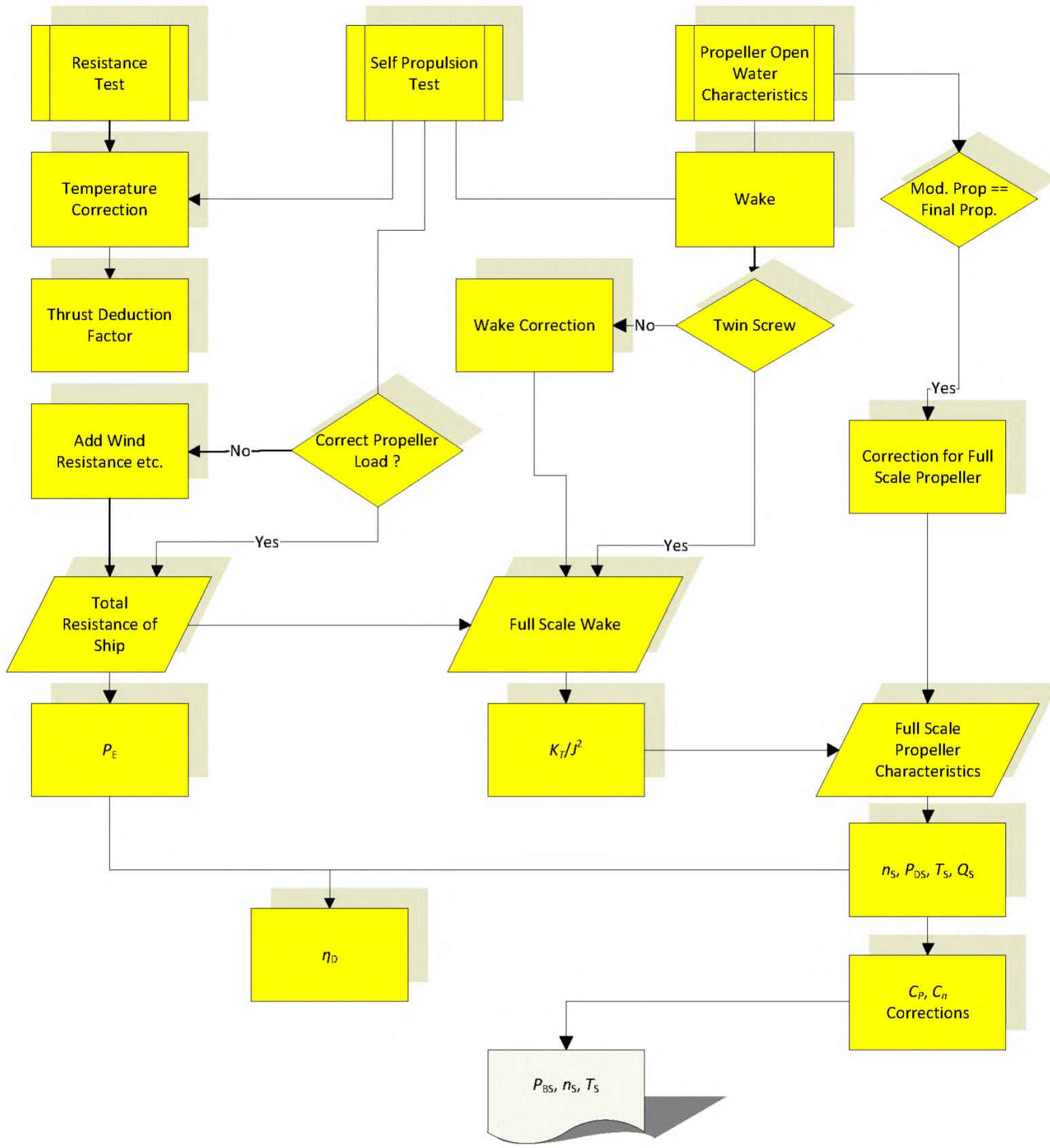

For each speed the following *calculated data* is to be given as a minimum:
- Ship speed
- Model wake coefficient
- Ship wake coefficient
- Propeller thrust on ship
- Propeller torque on ship
- Rate of revolutions on ship
- Predicted power on ship (delivered power on Propeller(s) P_D)
- Sinkage fore and aft, or sinkage and trim

Scheme for review and witnessing Model Tests

Checking of Model Testing Procedure

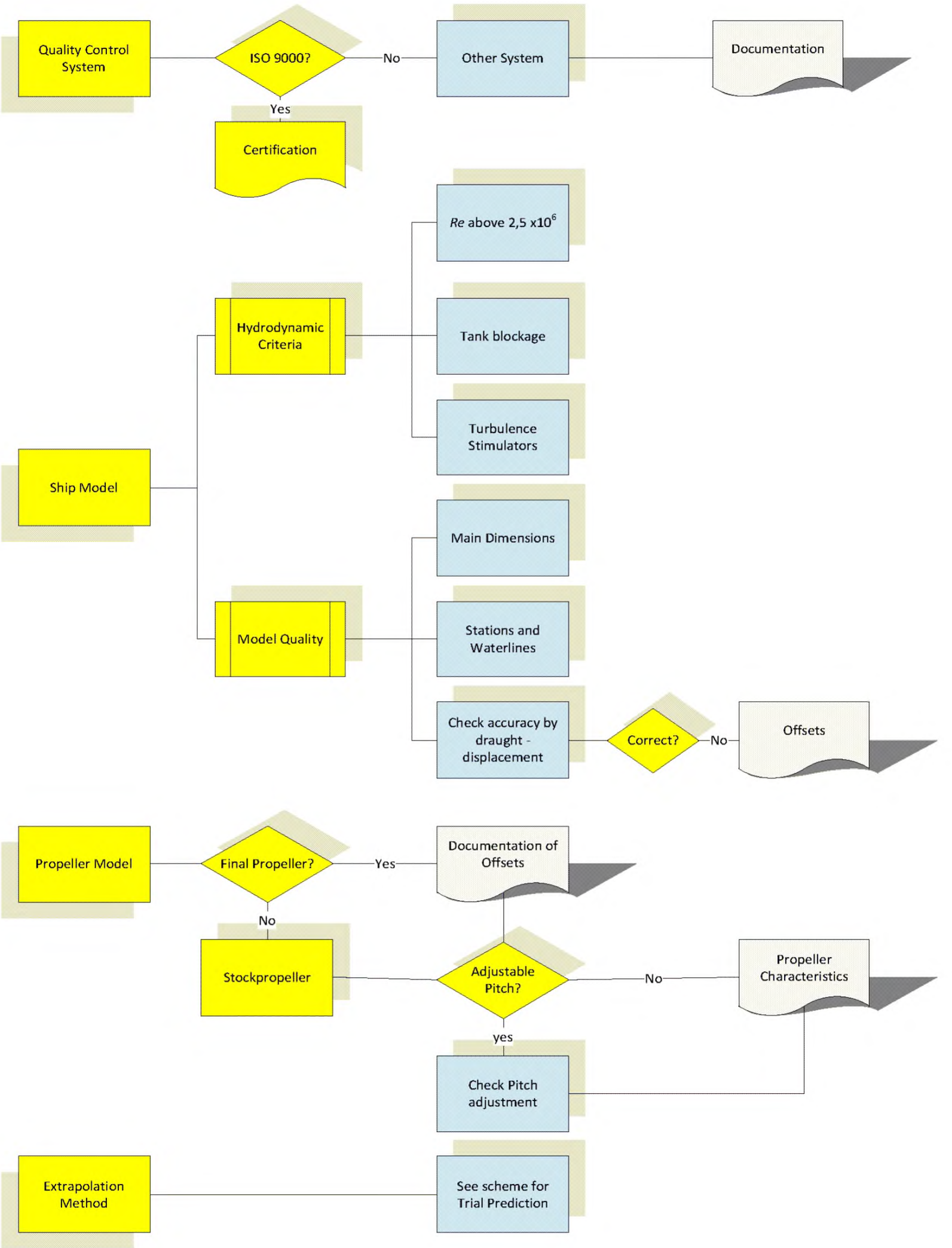

APPENDIX 5
Sample report "Preliminary Verification of EEDI"

ATTESTATION
PRELIMINARY VERIFICATION OF ENERGY EFFICIENCY DESIGN INDEX (EEDI)
by *VERIFIER*

Statement N° EEDI/2012/XXX

Ship particulars:

Ship Owner: _____

Shipyard: _____

Ship's Name: _____

IMO Number: _____

Hull number: _____

Building contract date: _____

Type of ship: _____

Port of registry: _____

Deadweight: _____

Summary results of EEDI

Reference speed	VV.V knots
Attained EEDI	X.XX g/t.nm
Required EEDI	Y.YY g/t.nm

Supporting documents

Title	ID and/or remarks
EEDI Technical File	RRRR dated 01/01/2013

This is to certify:

1. That the attained EEDI of the ship has been calculated according to the *2012 Guidelines on the method of calculation of the attained Energy Efficiency Design Index (EEDI) for new ships*, IMO Resolution MEPC.212(63)

2. That the preliminary verification of the EEDI shows that the ship complies with the applicable requirements in regulation 20 and regulation 21 of MARPOL Annex VI amended by Resolution MEPC.203(62).

Completion date of preliminary verification of EEDI: xx/xx/xxxx

Issued at: _____ on: _____

Signature of the Verifier

УНИФИЦИРОВАННЫЕ ИНТЕРПРЕТАЦИИ МАКО

IACS UNIFIED INTERPRETATIONS

SC 191 (Nov 2004) (Rev.1 May 2005) (Rev.2 Oct 2005) (Corr. Dec 2005) (Rev.3 Mar 2006) (Rev.4 Sept 2011) (Corr.1 Nov 2011) (Rev.5 May 2013) (Rev.6 May 2014) (Corr.1 Sept 2014) (Rev.7 Jan 2015)

IACS Unified Interpretations (UI) SC 191 for the application of amended SOLAS regulation II-1/3-6 (resolution MSC.151(78)) and revised Technical provisions for means of access for inspections (resolution MSC.158(78))

Note:

1. This UI is to be applied by IACS Members and Associates when acting as recognized organizations, authorized by flag State Administrations to act on their behalf, unless otherwise advised, from 1 January 2005.

2. Rev.1 (May 2005) introduced new Annex to UI SC 191. Rev.1 is to be applied by IACS Members and Associates from 1 July 2005.

3. Rev.2 (Oct.2005) re-categorized the Annex to UI SC191 (Rev.1) as Recommendation No.91.

   Rev.2 (Oct.2005 / Corr. Dec. 2005) is to be applied by IACS Members and Associates to ships contracted for construction on or after 1 May 2006.

   Refer to IMO MSC/Circ. 1176.

4. The 'contracted for construction' date means the date on which the contract to build the vessel is signed between the prospective owner and the shipbuilder. For further details about the date of 'contract for construction', refer to IACS Procedural Requirement (PR) No. 29.

5. Rev.3 is to be applied by IACS Members and Associates from 1 October 2006.

6. Rev.4 is to be applied by IACS Members to ships contracted for construction from 1 July 2012.

7. Rev.5 is to be applied by IACS Members to ships contracted for construction from 24 June 2013.

8. Rev.6 is to be applied by IACS Members to ships contracted for construction from 1 July 2015.

9. Rev.7 is to be applied by IACS Members to ships contracted for construction from 1 July 2016.

SC 191 (cont)

SOLAS regulation II-1/3-6, section 1

1 Application

1.1 Except as provided for in paragraph 1.2, this regulation applies to oil tankers of 500 gross tonnage and over and bulk carriers, as defined in regulation IX/1, of 20,000 gross tonnage and over, constructed on or after 1 January 2006.

1.2 Oil tankers of 500 gross tonnage and over constructed on or after 1 October 1994 but before 1 January 2005 shall comply with the provisions of regulation II-1/12-2 adopted by resolution MSC.27(61).

Interpretation

Oil tankers:

This regulation is only applicable to oil tankers having integral tanks for carriage of oil in bulk, which is contained in the definition of oil in Annex 1 of MARPOL 73/78. Independent oil tanks can be excluded.

Regulation II-1/3-6 is not normally applied to FPSO or FSO unless the Administration decides otherwise.

Technical Background

Means of Access (MA) specified in the Technical provisions contained in resolution MSC.158(78) are not specific with respect to the application to integral cargo oil tanks or also to independent cargo oil tanks. ESP requirements of oil tankers have been established assuming the target cargo oil tanks are integral tanks. The MA regulated under SOLAS regulation II-1/3-6 is for overall and close-up inspections as defined in regulation IX/1. Therefore it is assumed that the target cargo oil tanks are those of ESP, i.e. integral cargo tanks.

Regulation II-1/3-6 is applicable to FPSO or FSO if they are subject to the scope of ESP as contained in resolution A.1049(27) (2011 ESP Code), as amended.

Ref.

SOLAS regulation IX/1 and resolution A.1049(27) (2011 ESP Code), as amended.

SC 191 (cont)

SOLAS regulation II-1/3-6, paragraph 2.1

2.1 Each space shall be provided with a permanent means of access to enable, throughout the life of a ship, overall and close-up inspections and thickness measurements of the ship's structures to be carried out by the Administration, the company, as defined in regulation IX/1, and the ship's personnel and others as necessary. Such means of access shall comply with the requirements of paragraph 5 and with the Technical provisions for means of access for inspections, adopted by the Maritime Safety Committee by resolution MSC.133(76), as may be amended by the Organization, provided that such amendments are adopted, brought into force and take effect in accordance with the provisions of article VIII of the present Convention concerning the amendment procedures applicable to the Annex other than chapter 1.

Interpretation

Each space for which close-up inspection is not required such as fuel oil tanks and void spaces forward of cargo area, may be provided with a means of access necessary for overall survey intended to report on the overall conditions of the hull structure.

SC 191 (cont)

SOLAS regulation II-1/3-6, paragraph 2.2

2.2 Where a permanent means of access may be susceptible to damage during normal cargo loading and unloading operations or where it is impracticable to fit permanent means of access, the Administration may allow, in lieu thereof, the provision of movable or portable means of access, as specified in the Technical provisions, provided that the means of attaching, rigging, suspending or supporting the portable means of access forms a permanent part of the ship's structure. All portable equipment shall be capable of being readily erected or deployed by ship's personnel.

Interpretation

Some possible alternative means of access are listed under paragraph 3.9 of the Technical Provisions for means of access for inspection(TP). Always subject to acceptance as equivalent by the Administration, alternative means such as an unmanned robot arm, ROV's and dirigibles with necessary equipment of the permanent means of access for overall and close-up inspections and thickness measurements of the deck head structure such as deck transverses and deck longitudinals of cargo oil tanks and ballast tanks, are to be capable of:

- safe operation in ullage space in gas-free environment;
- introduction into the place directly from a deck access.

When considering use of alternative means of access as addressed by paragraph 3.9 of the TP, refer to IACS Recommendation No.91 "Guidelines for Approval/Acceptance of Alternative Means of Access".

Technical Background

Innovative approaches, in particular a development of robot in place of elevated passageways, are encouraged and it is considered worthwhile to provide the functional requirement for the innovative approach.

SC 191 (cont)

SOLAS regulation II-1/3-6, paragraph 2.3

2.3 The construction and materials of all means of access and their attachment to the ship's structure shall be to the satisfaction of the Administration. The means of access shall be subject to survey prior to, or in conjunction with, its use in carrying out surveys in accordance with regulation I/10.

Interpretation

Inspection

The MA arrangements, including portable equipment and attachments, are to be periodically inspected by the crew or competent inspectors as and when it is going to be used to confirm that the MAs remain in serviceable condition.

Procedures

1. Any Company authorised person using the MA shall assume the role of inspector and check for obvious damage prior to using the access arrangements. Whilst using the MA the inspector is to verify the condition of the sections used by close up examination of those sections and note any deterioration in the provisions. Should any damage or deterioration be found, the effect of such deterioration is to be assessed as to whether the damage or deterioration affects the safety for continued use of the access. Deterioration found that is considered to affect safe use is to be determined as "substantial damage" and measures are to be put in place to ensure that the affected section(s) are not to be further used prior effective repair.

2. Statutory survey of any space that contains MA shall include verification of the continued effectiveness of the MA in that space. Survey of the MA shall not be expected to exceed the scope and extent of the survey being undertaken. If the MA is found deficient the scope of survey is to be extended if this is considered appropriate.

3. Records of all inspections are to be established based on the requirements detailed in the ships Safety Management System. The records are to be readily available to persons using the MAs and a copy attached to the MA Manual. The latest record for the portion of the MA inspected is to include as a minimum the date of the inspection, the name and title of the inspector, a confirmation signature, the sections of MA inspected, verification of continued serviceable condition or details of any deterioration or substantial damage found. A file of permits issued is to be maintained for verification.

Technical Background

It is recognised that MA may be subject to deterioration in the long term due to corrosive environment and external forces from ship motions and sloshing of liquid contained in the tank. MA therefore is to be inspected at every opportunity of tank/space entry. The above interpretation is to be contained in a section of the MA Manual.

SC 191 (cont)

SOLAS regulation II-1/3-6, paragraph 3.1

3 Safe access to cargo holds, cargo tanks, ballast tanks and other spaces

3.1 Safe access* to cargo holds, cofferdams, ballast tanks, cargo tanks and other spaces in the cargo area shall be direct from the open deck and such as to ensure their complete inspection. Safe access to double bottom spaces or to forward ballast tanks may be from a pump-room, deep cofferdam, pipe tunnel, cargo hold, double hull space or similar compartment not intended for the carriage of oil or hazardous cargoes.

* Refer to the Revised recommendations for entering enclosed spaces aboard ships, adopted by the Organization by resolution A.1050(27).

Interpretation

Access to a double side skin space of bulk carriers may be either from a topside tank or double bottom tank or from both.

The wording "not intended for the carriage of oil or hazardous cargoes" applies only to "similar compartments", i.e. safe access can be through a pump-room, deep cofferdam, pipe tunnel, cargo hold or double hull space.

Technical Background

Unless used for other purposes, the double side skin space is to be designed as a part of a large U-shaped ballast tank and such space is to be accessed through the adjacent part of the tank, i.e. topside tank or double bottom/bilge hopper tank. Access to the double side skin space from the adjacent part rather than direct from the open deck is justified. Any such arrangement is to provide a directly routed, logical and safe access that facilitates easy evacuation of the space.

SC 191 (cont)

SOLAS regulation II-1/3-6, paragraph 3.2

3.2 Tanks, and subdivisions of tanks, having a length of 35 m or more shall be fitted with at least two access hatchways and ladders, as far apart as practicable. Tanks less than 35 m in length shall be served by at least one access hatchway and ladder. When a tank is subdivided by one or more swash bulkheads or similar obstructions which do not allow ready means of access to the other parts of the tank, at least two hatchways and ladders shall be fitted.

Interpretation

A cargo oil tank of less than 35 m length without a swash bulkhead requires only one access hatch.

Where rafting is indicated in the ship structures access manual as the means to gain ready access to the under deck structure, the term "*similar obstructions*" referred to in the regulation includes internal structures (e.g., webs >1.5m deep) which restrict the ability to raft (at the maximum water level needed for rafting of under deck structure) directly to the nearest access ladder and hatchway to deck. When rafts or boats alone, as an alternative means of access, are allowed under the conditions specified in resolution A.1049(27) (2011 ESP Code), as amended, permanent means of access are to be provided to allow safe entry and exit. This means:

a) access direct from the deck via a vertical ladder and small platform fitted approximately 2m below the deck in each bay; or

b) access to deck from a longitudinal permanent platform having ladders to deck in each end of the tank. The platform shall, for the full length of the tank, be arranged in level with, or above, the maximum water level needed for rafting of under deck structure. For this purpose, the ullage corresponding to the maximum water level is to be assumed not more than 3m from the deck plate measured at the midspan of deck transverses and in the middle length of the tank. (See Figure below). A permanent means of access from the longitudinal permanent platform to the water level indicated above is to be fitted in each bay (e.g., permanent rungs on one of the deck webs inboard of the longitudinal permanent platform).

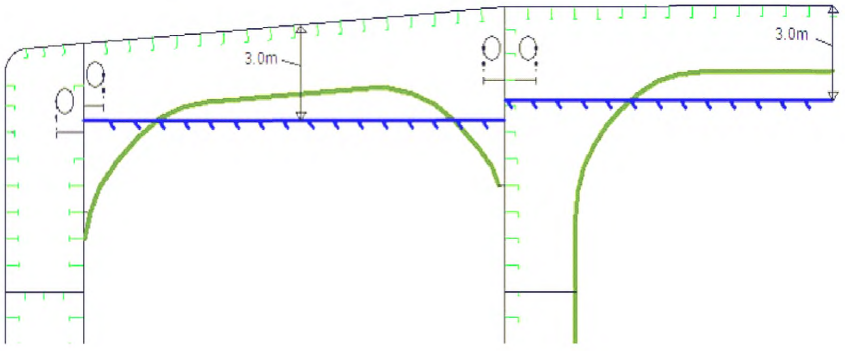

SC 191 (cont)

SOLAS regulation II-1/3-6, paragraph 4.1

4 Ship structure access manual

4.1 A ship's means of access to carry out overall and close-up inspections and thickness measurements shall be described in a Ship structure access manual approved by the Administration, an updated copy of which shall be kept on board. The Ship structure access manual shall include the following for each space:

.1 plans showing the means of access to the space, with appropriate technical specifications and dimensions;

.2 plans showing the means of access within each space to enable an overall inspection to be carried out, with appropriate technical specifications and dimensions. The plans shall indicate from where each area in the space can be inspected;

.3 plans showing the means of access within the space to enable close-up inspections to be carried out, with appropriate technical specifications and dimensions. The plans shall indicate the positions of critical structural areas, whether the means of access is permanent or portable and from where each area can be inspected;

.4 instructions for inspecting and maintaining the structural strength of all means of access and means of attachment, taking into account any corrosive atmosphere that may be within the space;

.5 instructions for safety guidance when rafting is used for close-up inspections and thickness measurements;

.6 instructions for the rigging and use of any portable means of access in a safe manner;

.7 an inventory of all portable means of access; and

.8 records of periodical inspections and maintenance of the ship's means of access.

Interpretation

The access manual is to address spaces listed in paragraph 3 of the regulation II-1/3-6.

As a minimum the English version is to be provided.

The ship structure access manual is to contain at least the following two parts:

Part 1: Plans, instructions and inventory required by paragraphs 4.1.1 to 4.1.7 of regulation II-1/3-6. This part is to be approved by the Administration or the organization recognised by the Administration.

Part 2: Form of record of inspections and maintenance, and change of inventory of portable equipment due to additions or replacement after construction. This part is to be approved for its form only at new building.

The following matters are to be addressed in the ship structure access manual:

1. The access manual is to clearly cover scope as specified in the regulations for use by crews, surveyors and port State control officers.

SC 191 (cont)

2. Approval / re-approval procedure for the manual, i.e. any changes of the permanent, portable, movable or alternative means of access within the scope of the regulation and the Technical provisions are subject to review and approval by the Administration or by the organization recognised by the Administration.

3. Verification of MA is to be part of safety construction survey for continued effectiveness of the MA in that space which is subject to the statutory survey.

4. Inspection of MA by the crew and/or a competent inspector of the company as a part of regular inspection and maintenance (see interpretation for paragraph 2.3 of SOLAS regulation II-1/3-6).

5. Actions to be taken if MA is found unsafe to use.

6. In case of use of portable equipment plans showing the means of access within each space indicating from where and how each area in the space can be inspected.

Refer to IACS Recommendation No.90 "Ship Structural Access Manual"

SC 191 (cont)

SOLAS regulation II-1/3-6, paragraph 4.2

4.2 For the purpose of this regulation "critical structural areas" are locations which have been identified from calculations to require monitoring or from the service history of similar or sister ships to be sensitive to cracking, buckling, deformation or corrosion which would impair the structural integrity of the ship.

Interpretation

1) Critical structural areas are to be identified by advanced calculation techniques for structural strength and fatigue performance, if available, and feed back from the service history and design development of similar or sister ships.

2) Reference is to be made to the following publications for critical structural areas, where applicable:

- Oil tankers: Guidance Manual for Tanker Structures by TSCF;
- Bulk carriers: Bulk Carriers Guidelines for Surveys, Assessment and Repair of Hull Structure by IACS;
- Oil tankers and bulk carriers: resolution A.1049(27) (2011 ESP Code), as amended.

Technical Background

These documents contain the relevant information for the present ship types. However identification of critical areas for new double hull tankers and double side skin bulk carriers of improved structural design is to be made by structural analysis at the design stage, this information is to be taken in to account to ensure appropriate access to all identified critical areas.

SC 191 (cont)

SOLAS regulation II-1/3-6, paragraph 5.1

5 General technical specifications

5.1 For access through horizontal openings, hatches or manholes, the dimensions shall be sufficient to allow a person wearing a self-contained air-breathing apparatus and protective equipment to ascend or descend any ladder without obstruction and also provide a clear opening to facilitate the hoisting of an injured person from the bottom of the space. The minimum clear opening shall not be less than 600 mm x 600 mm. When access to a cargo hold is arranged through the cargo hatch, the top of the ladder shall be placed as close as possible to the hatch coaming. Access hatch coamings having a height greater than 900 mm shall also have steps on the outside in conjunction with the ladder.

Interpretation

The minimum clear opening of 600 mm x 600 mm may have corner radii up to 100 mm maximum. The clear opening is specified in MSC/Circ.686 to keep the opening fit for passage of personnel wearing a breathing apparatus. In such a case where as a consequence of structural analysis of a given design the stress is to be reduced around the opening, it is considered appropriate to take measures to reduce the stress such as making the opening larger with increased radii, e.g. 600 x 800 with 300 mm radii, in which a clear opening of 600 x 600 mm with corner radii up to 100mm maximum fits.

Technical Background

The interpretation is based upon the established Guidelines in MSC/Circ.686.

Ref.

Paragraphs 9 of Annex of MSC/Circ.686.

SC 191 (cont)

SOLAS regulation II-1/3-6, paragraph 5.2

5.2 For access through vertical openings, or manholes, in swash bulkheads, floors, girders and web frames providing passage through the length and breadth of the space, the minimum opening shall be not less than 600 mm x 800 mm at a height of not more than 600 mm from the bottom shell plating unless gratings or other foot holds are provided.

Interpretation

1. The minimum clear opening of not less than 600 mm x 800 mm may also include an opening with corner radii of 300 mm. An opening of 600mm in height x 800mm in width may be accepted as access openings in vertical structures where it is not desirable to make large opening in the structural strength aspects, i.e. girders and floors in double bottom tanks.

2. Subject to verification of easy evacuation of injured person on a stretcher the vertical opening 850 mm x 620 mm with wider upper half than 600 mm, while the lower half may be less than 600 mm with the overall height not less than 850 mm is considered an acceptable alternative to the traditional opening of 600 mm x 800 mm with corner radii of 300 mm.

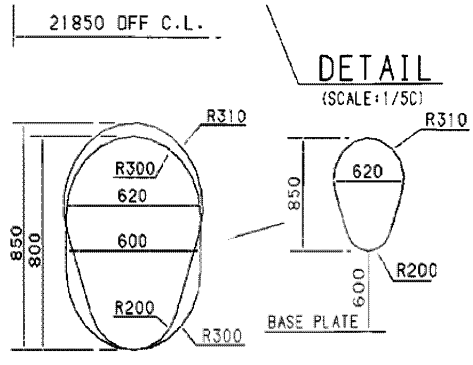

3. If a vertical opening is at a height of more than 600 mm steps and handgrips are to be provided. In such arrangements it is to be demonstrated that an injured person can be easily evacuated.

Technical Background

The interpretation is based upon the established Guidelines in MSC/Circ.686 and an innovative design is considered for easy access by humans through the opening.

Ref.

Paragraphs 11 of Annex of MSC/Circ.686.

SC 191 (cont)

Technical Provision, resolution MSC.158(78), paragraph 1.3

1. Preamble

1.3 In order to address this issue, the Organization has developed these Technical provisions for means of access for inspections (hereinafter called the "Technical provisions"), intended to facilitate close-up inspections and thickness measurements of the ship's structure referred to in SOLAS regulation II-1/3-6 on Access to and within spaces in, and forward of, the cargo area of oil tankers and bulk carriers. The Technical provisions do not apply to the cargo tanks of combined chemical/oil tankers complying with the provisions of the IBC Code.

Interpretation

A "combined chemical/oil tankers complying with the provisions of the IBC Code" is a tanker that holds both a valid IOPP certificate as tanker and a valid certificate of fitness for the carriage of dangerous chemicals in bulk. i.e. a tanker that is certified to carry both oil cargoes under MARPOL Annex I and Chemical cargoes in chapter 17 of the IBC Code either as full or part cargoes.

The Technical provisions are to be applied to ballast tanks of combined chemical/oil tankers complying with the provisions of the IBC Code.

SC 191 (cont)

Technical Provision, resolution MSC.158(78), paragraph 1.4

1. Preamble

1.4 Permanent means of access which are designed to be integral parts of the structure itself are preferred and Administrations may allow reasonable deviations to facilitate such designs.

Interpretation

In the context of the above requirement, the deviation shall be applied only to distances between integrated PMA that are the subject of paragraph 2.1.2 of Table 1.

Deviations shall not be applied to the distances governing the installation of underdeck longitudinal walkways and dimensions that determine whether permanent access are required or not, such as height of the spaces and height to elements of the structure (e.g. cross-ties).

SC 191 (cont)

Technical Provision, resolution MSC.158(78), paragraph 3.1

3.1 Structural members subject to the close-up inspections and thickness measurements of the ship's structure referred to in SOLAS regulation II-1/ 3-6, except those in double bottom spaces, shall be provided with a permanent means of access to the extent as specified in table 1 and table 2, as applicable. For oil tankers and wing ballast tanks of ore carriers, approved alternative methods may be used in combination with the fitted permanent means of access, provided that the structure allows for its safe and effective use.

Interpretation

The permanent means of access to a space can be credited for the permanent means of access for inspection.

Technical Background

The Technical provisions specify means of access to a space and to hull structure for carrying out overall and close up surveys and inspections. Requirements of MA to hull structure may not always be suitable for access to a space. However if the MA for access to a space can also be used for the intended surveys and inspections such MA can be credited for the MA for use for surveys and inspections.

SC 191 (cont)

Technical Provision, resolution MSC.158(78), paragraph 3.3

3.3 Elevated passageways forming sections of a permanent means of access, where fitted, shall have a minimum clear width of 600 mm, except for going around vertical webs where the minimum clear width may be reduced to 450 mm, and have guard rails over the open side of their entire length. Sloping structure providing part of the access shall be of a non-skid construction. Guard rails shall be 1,000 mm in height and consist of a rail and intermediate bar 500 mm in height and of substantial construction. Stanchions shall be not more than 3 m apart.

Interpretation

1. Sloping structures are structures that are sloped by 5 or more degrees from horizontal plane when a ship is in upright position at even-keel.

2. Guard rails are to be fitted on the open side and should be at least 1,000 mm in height. For stand alone passageways guard rails are to be fitted on both sides of these structures. Guardrail stanchions are to be attached to the PMA. The distance between the passageway and the intermediate bar and the distance between intermediate bar and the top rail shall not be more than 500 mm.

3. Discontinuous top handrails are allowed, provided the gap does not exceed 50 mm.

The same maximum gap is to be considered between the top handrail and other structural members (i.e. bulkhead, web frame, etc.).

The maximum distance between the adjacent stanchions across the handrail gaps is to be 350 mm where the top and mid handrails are not connected together and 550 mm when they are connected together.

The maximum distance between the stanchion and other structural members is not to exceed 200 mm where the top and mid handrails are not connected together and 300 mm when they are connected together.

When the top and mid handrails are connected by a bent rail, the outside radius of the bent part is not to exceed 100 mm (see Figure below).

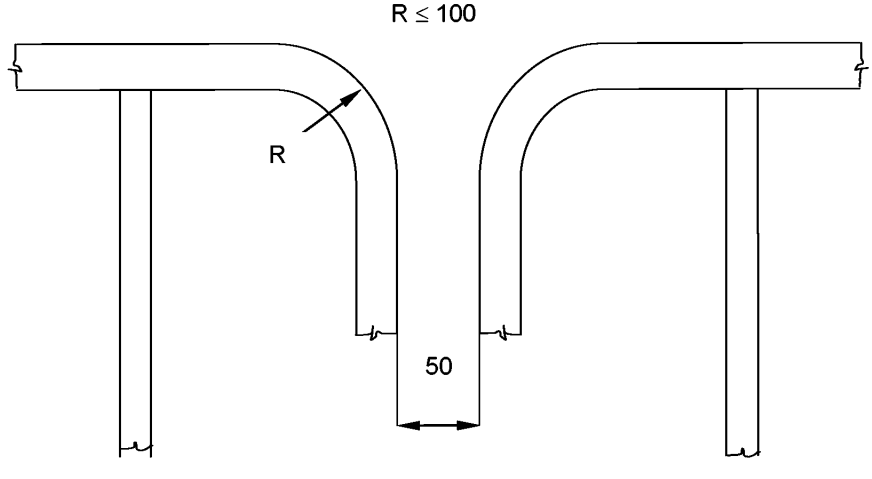

SC 191 (cont)

4. Non-skid construction is such that the surface on which personnel walks provides sufficient friction to the sole of boots even if the surface is wet and covered with thin sediment.

5. "Substantial construction" is taken to refer to the as-designed strength as well as the residual strength during the service life of the vessel. Durability of passageways together with guard rails is to be ensured by the initial corrosion protection and inspection and maintenance during services.

6. For guard rails, use of alternative materials such as GRP is to be subject to compatibility with the liquid carried in the tank. Non-fire resistant materials are not to be used for means of access to a space with a view to securing an escape route at a high temperature.

7. Requirements for resting platforms placed between ladders are equivalent to those applicable to elevated passageways.

Ref.

Paragraph 10 of Annex to MSC/Circ.686

SC 191 (cont)

Technical Provision, resolution MSC.158(78), paragraph 3.4

3.4 Access to permanent means of access and vertical openings from the ship's bottom shall be provided by means of easily accessible passageways, ladders or treads. Treads shall be provided with lateral support for the foot. Where the rungs of ladders are fitted against a vertical surface, the distance from the centre of the rungs to the surface shall be at least 150 mm. Where vertical manholes are fitted higher than 600 mm above the walking level, access shall be facilitated by means of treads and hand grips with platform landings on both sides.

Interpretation

Where the vertical manhole is at a height of more than 600 mm above the walking level, it shall be demonstrated that an injured person can be easily evacuated.

SC 191 (cont)

Technical Provision, resolution MSC.158(78), paragraph 3.5

3.5 Permanent inclined ladders shall be inclined at an angle of less than 70°. There shall be no obstructions within 750 mm of the face of the inclined ladder, except that in way of an opening this clearance may be reduced to 600 mm. Resting platforms of adequate dimensions shall be provided normally at a maximum of 6 m vertical height. Ladders and handrails shall be constructed of steel or equivalent material of adequate strength and stiffness and securely attached to the structure by stays. The method of support and length of stay shall be such that vibration is reduced to a practical minimum. In cargo holds, ladders shall be designed and arranged so that the risk of damage from cargo handling gear is minimized.

MA for access to ballast tanks, cargo tanks and spaces other than fore peak tanks:

For oil tankers:

1. Tanks and subdivisions of tanks having a length of 35 m or more with two access hatchways:

First access hatchway: Inclined ladder or ladders are to be used.

Second access hatchway:

i. A vertical ladder may be used. In such a case where the vertical distance is more than 6 m, vertical ladders are to comprise one or more ladder linking platforms spaced not more than 6 m apart vertically and displaced to one side of the ladder.

The uppermost section of the vertical ladder, measured clear of the overhead obstructions in way of the tank entrance, is not to be less than 2.5 m but not exceed 3.0 m and is to comprise a ladder linking platform which is to be displaced to one side of a vertical ladder. However, the vertical distance of the upper most section of the vertical ladder may be reduced to 1.6 m, measured clear of the overhead obstructions in way of the tank entrance, if the ladder lands on a longitudinal or athwartship permanent means of access fitted within that range; or

ii. Where an inclined ladder or combination of ladders is used for access to the space, the uppermost section of the ladder, measured clear of the overhead obstructions in way of the tank entrance, is to be vertical for not less than 2.5 m but not exceed 3.0m and is to comprise a landing platform continuing with an inclined ladder. However, the vertical distance of the upper most section of the vertical ladder may be reduced to 1.6 m, measured clear of the overhead obstructions in way of the tank entrance, if the ladder lands on a longitudinal or athwartship permanent means of access fitted within that range. The flights of the inclined ladders are normally to be not more than 6 m in vertical height. The lowermost section of the ladders may be vertical for the vertical distance not exceeding 2.5 m.

2. Tanks less than 35 m in length and served by one access hatchway an inclined ladder or combination of ladders are to be used to the space as specified in 1.ii above.

3. In spaces of less than 2.5 m width the access to the space may be by means of vertical ladders that comprises one or more ladder linking platforms spaced not more than 6 m apart vertically and displaced to one side of the ladder. The uppermost section of the vertical ladder, measured clear of the overhead obstructions in way of the tank entrance, is not to be less than 2.5 m but not exceed 3.0 m and is to comprise a ladder linking platform which is to be displaced to one side of a vertical ladder. However, the vertical distance of the upper most section of the vertical ladder may be reduced to

SC 191 (cont)

1.6 m, measured clear of the overhead obstructions in way of the tank entrance, if the ladder lands on a longitudinal or athwartship permanent means of access fitted within that range. Adjacent sections of the ladder are to be laterally offset from each other by at least the width of the ladder (see paragraph 20 of MSC/Circ.686).

4. Access from deck to a double bottom space may be by means of vertical ladders through a trunk. The vertical distance from deck to a resting platform, between resting platforms or a resting platform and the tank bottom is not to be more than 6 m unless otherwise approved by the Administration.

MA for inspection of the vertical structure of oil tankers:

Vertical ladders provided for means of access to the space may be used for access for inspection of the vertical structure.

Unless stated otherwise in Table 1 of TP, vertical ladders that are fitted on vertical structures for inspection are to comprise one or more ladder linking platforms spaced not more than 6 m apart vertically and displace to one side of the ladder. Adjacent sections of ladder are to be laterally offset from each other by at least the width of the ladder (paragraph 20 of MSC/Circ.686).

Obstruction distances

The minimum distance between the inclined ladder face and obstructions, i.e. 750 mm and, in way of openings, 600 mm specified in TP 3.5 is to be measured perpendicular to the face of the ladder.

Technical Background

It is a common practice to use a vertical ladder from deck to the first landing to clear overhead obstructions before continuing to an inclined ladder or a vertical ladder displaced to one side of the first vertical ladder.

Ref.

For vertical ladders: Paragraph 20 of the annex to MSC/Circ.686.

SC 191 (cont)

Technical Provision, resolution MSC.158(78), paragraph 3.6

3.6 The width of inclined ladders between stringers shall not be less than 400 mm. The treads shall be equally spaced at a distance apart, measured vertically, of between 200 mm and 300 mm. When steel is used, the treads shall be formed of two square bars of not less than 22 mm by 22 mm in section, fitted to form a horizontal step with the edges pointing upward. The treads shall be carried through the side stringers and attached thereto by double continuous welding. All inclined ladders shall be provided with handrails of substantial construction on both sides fitted at a convenient distance above the treads.

Interpretation

1. Vertical height of handrails is not to be less than 890 mm from the center of the step and two course handrails need only be provided where the gap between stringer and top handrail is greater than 500 mm.

2. The requirement of two square bars for treads specified in TP, paragraph 3.6, is based upon the specification of construction of ladders in paragraph 3(e) of Annex 1 to resolution A.272(VIII), which addresses inclined ladders. TP, paragraph 3.4, allows for single rungs fitted to vertical surfaces, which is considered for a safe grip. For vertical ladders, when steel is used, the rungs are to be formed of single square bars of not less than 22 mm by 22 mm for the sake of safe grip.

3. The width of inclined ladders for access to a cargo hold is to be at least 450 mm to comply with the Australian AMSA Marine Orders Part 32, Appendix 17.

4. The width of inclined ladders other than an access to a cargo hold is to be not less than 400 mm.

5. The minimum width of vertical ladders is to be 350 mm and the vertical distance between the rungs is to be equal and is to be between 250 mm and 350 mm.

6. A minimum climbing clearance in width is to be 600 mm other than the ladders placed between the hold frames.

7. The vertical ladders are to be secured at intervals not exceeding 2.5 m apart to prevent vibration.

Technical Background

- TP, paragraph 3.6, is a continuation of TP, paragraph 3.5, which addresses inclined ladders. Interpretations for vertical ladders are needed based upon the current standards of IMO, AMSA or the industry.

- Interpretations 2 and 5 address vertical ladders based upon the current standards.

- Double square bars for treads become too large for a grip for vertical ladders and single rungs facilitate a safe grip.

- Interpretation 7 is introduced consistently with the requirement and the interpretation of TP, paragraph 3.4.

SC 191 (cont)

Ref.

- Annex 1 to resolution A.272(VIII).
- Australian AMSA Marine Orders Part 32, Appendix 17.
- ILO Code of Practice “Safety and Health in Dockwork” – Section 3.6 Access to Ship’s Holds.

SC 191 (cont)

Technical Provision, resolution MSC.158(78), paragraph 3.9.6

3.9.6 Portable ladders more than 5 m long may only be utilized if fitted with a mechanical device to secure the upper end of the ladder.

Interpretation

A mechanical device such as hooks for securing at the upper end of a ladder is to be considered as an appropriate securing device if a movement fore/aft and sideways can be prevented at the upper end of the ladder.

Technical Background

Innovative design is to be accepted if it fits the functional requirement with due consideration for safe use.

SC 191 (cont)

Technical Provision, resolution MSC.158(78), paragraph 3.10 and 3.11

3.10 For access through horizontal openings, hatches or manholes, the minimum clear opening shall not be less than 600 mm x 600 mm. When access to a cargo hold is arranged through the cargo hatch, the top of the ladder shall be placed as close as possible to the hatch coaming. Access hatch coamings having a height greater than 900 mm shall also have steps on the outside in conjunction with the ladder.

3.11 For access through vertical openings, or manholes, in swash bulkheads, floors, girders and web frames providing passage through the length and breadth of the space, the minimum opening shall be not less than 600 mm x 800 mm at a height of not more than 600 mm from the passage unless gratings or other foot holds are provided.

Interpretation

See interpretation for paragraphs 5.1 and 5.2 of SOLAS regulation II-1/3-6.

SC 191 (cont)

Technical Provision, resolution MSC.158(78), paragraph 3.13.1

3.13. For bulk carriers, access ladders to a cargo hold shall be:

.1 where the vertical distance between the upper surface of adjacent decks or between deck and the bottom of the cargo space is not more than 6 m, either a vertical ladder or an inclined ladder; and

Interpretation

Either a vertical or an inclined ladder or a combination of them may be used for access to a cargo hold where the vertical distance is 6 m or less from the deck to the bottom of the cargo hold.

SC 191 (cont)

Technical Provision, resolution MSC.158(78), paragraph 3.13.2 and paragraph 3.13.6

3.13. For bulk carriers, access ladders to a cargo hold shall be:

.1 ....omissis.....

.2 Where the vertical distance between the upper surface of adjacent decks or between deck and the bottom of the cargo space is more than 6 m, an inclined ladder or series of inclined ladders at one end of the cargo hold, except the uppermost 2.5 m of a cargo space measured clear of overhead obstructions and the lowest 6 m may have vertical ladders, provided that the vertical extent of the inclined ladder or ladders connecting the vertical ladders is not less than 2.5 m.

The second means of access at the other end of the cargo hold may be formed of a series of staggered vertical ladders, which should comprise of one or more ladder linking platforms spaced not more than 6 m apart vertically and displaced to one side of the ladder. Adjacent sections of ladder should be laterally offset from each other by at least the width of the ladder. The uppermost entrance section of the ladder directly exposed to a cargo hold should be vertical for a distance of 2.5 m measured clear of overhead obstructions and connected to a ladder-linking platform.

.3 ....omissis.....

.4 ....omissis.....

.5 ....omissis.....

.6 In double-side skin spaces of less than 2.5 m width, the access to the space may be by means of vertical ladders that comprise of one or more ladder linking platforms spaced mnot more than 6 m apart vertically and displaced to one side of the ladder. Adjacent sections of ladder should be laterally offset from each other by at least the width of the ladder.

. 7 ....omissis.....

Interpretation

Adjacent sections of vertical ladder need to be installed so that the following provisions are complied with:

- the minimum “lateral offset”. between two adjacent sections of vertical ladder, is the distance between the sections, upper and lower, so that the adjacent stringers are spaced of at least 200 mm, measured from half thickness of each stringer.

- adjacent sections of vertical ladder shall be installed so that the upper end of the lower section is vertically overlapped, in respect to the lower end of the upper section, to a height of 1500 mm in order to permit a safe transfer between ladders.

- no section of the access ladder shall be terminated directly or partly above an access opening.

Technical Background

The aims of the above are to:

SC 191 (cont)

a. Reduce the risk of accidents due to tiredness by providing a rest platform at appropriate intervals.

b. Reduce the risk of collateral injury from falling or dropping items of equipment by preventing the lateral overlap of two ladders.

SC 191 (cont)

Figure "A"
Vertical Ladder – Ladder through the linking platform

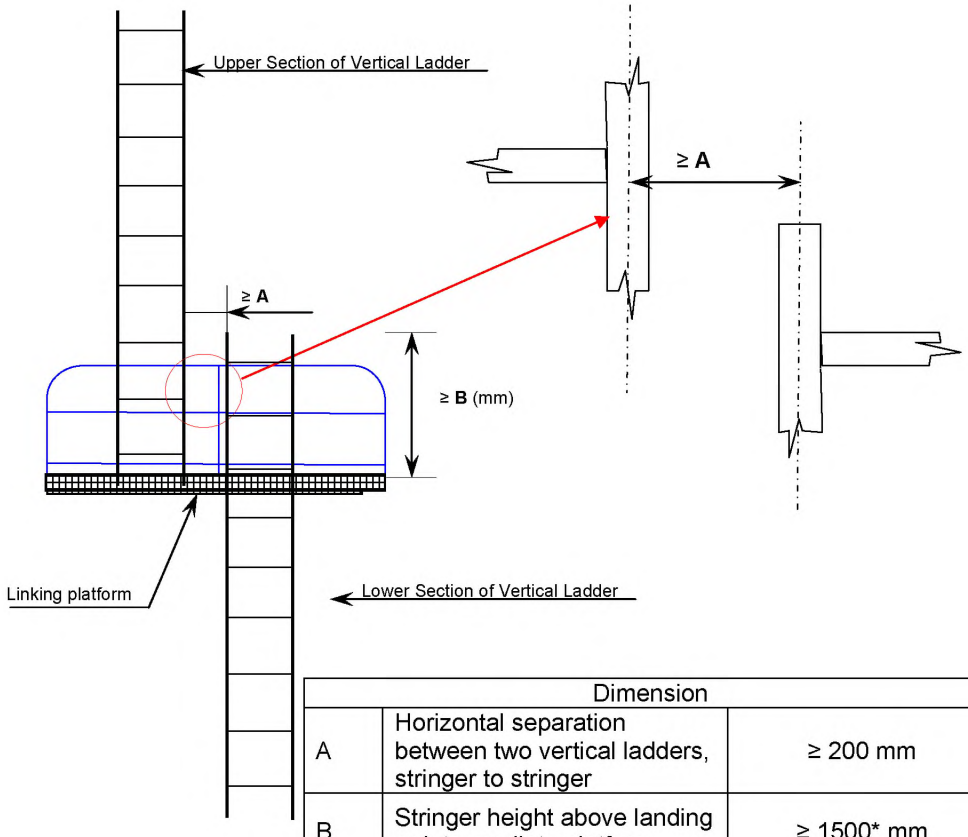

Dimension		
A	Horizontal separation between two vertical ladders, stringer to stringer	≥ 200 mm
B	Stringer height above landing or intermediate platform	≥ 1500* mm
C	Horizontal separation between ladder and platform	100 mm ≤C< 300 mm
*Note: the minimum height of the handrail stanchions of resting platform is of 1000 mm (Technical Provision, resolution MSC.158(78), paragraph 3.3)		

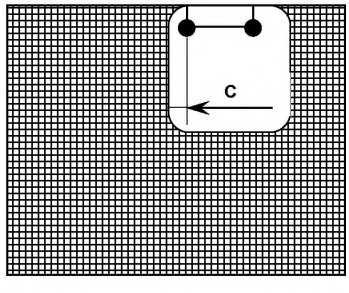

SC 191 (cont)

Figure "B"
Vertical Ladder – Side mount

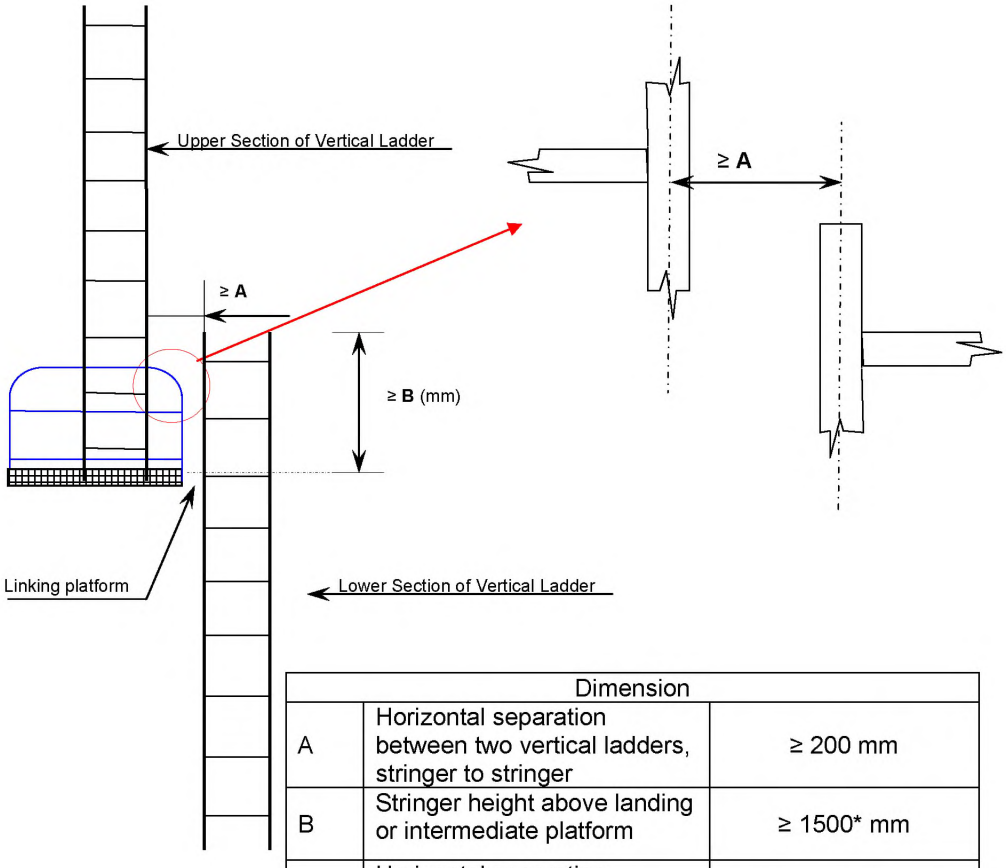

Dimension		
A	Horizontal separation between two vertical ladders, stringer to stringer	≥ 200 mm
B	Stringer height above landing or intermediate platform	≥ 1500* mm
C	Horizontal separation between ladder and platform	100 mm ≤C< 300 mm
*Note: the minimum height of the handrail stanchions of resting platform is of 1000 mm (Technical Provision, resolution MSC.158(78), paragraph 3.3)		

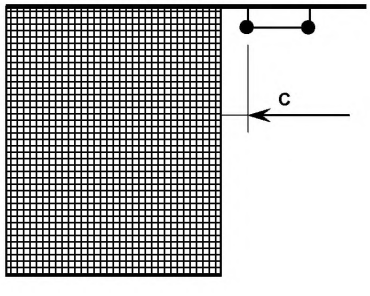

SC 191 (cont)

Technical Provision, resolution MSC.158(78), paragraph 3.14

3.14 The uppermost entrance section from deck of the vertical ladder providing access to a tank should be vertical for a distance of 2.5 m measured clear of overhead obstructions and comprise a ladder linking platform, displaced to one side of a vertical ladder. The vertical ladder can be between 1.6 m and 3 m below deck structure if it lands on a longitudinal or athwartship permanent means of access fitted within that range.

Interpretation

Deck is defined as “weather deck”.

SC 191 (cont)

Table 1 – Means of access for oil tankers, resolution MSC.158(78), paragraph 1.1

1 Water ballast tanks, except those specified in the right column, and cargo oil tanks

Access to overhead structure

1.1 For tanks of which the height is 6 m and over containing internal structures, permanent means of access shall be provided in accordance with .1 to .6:

Interpretation

1. Sub-paragraphs .1, .2 and .3 define access to underdeck structure, access to the uppermost sections of transverse webs and connection between these structures.

2. Sub-paragraphs .4, .5 and .6 define access to vertical structures only and are linked to the presence of transverse webs on longitudinal bulkheads.

3. If there are no underdeck structures (deck longitudinals and deck transverses) but there are vertical structures in the cargo tank supporting transverse and longitudinal bulkheads, access in accordance with sub-paragraphs from .1 through to .6 is to be provided for inspection of the upper parts of vertical structure on transverse and longitudinal bulkheads.

4. If there is no structure in the cargo tank, section 1.1 of Table 1 is not to be applied.

5. Section 1 of Table 1 is also to be applied to void spaces in cargo area, comparable in volume to spaces covered by the regulation II-1/3-6, except those spaces covered by Section 2.

6. The vertical distance below the overhead structure is to be measured from the underside of the main deck plating to the top of the platform of the means of access at a given location.

7. The height of the tank is to be measured at each tank. For a tank the height of which varies at different bays, item 1.1 is to be applied to such bays of a tank that have height 6 m and over.

Technical Background

Interpretation 7: If the height of the tank is increasing along the length of a ship the permanent means of access is to be provided locally where the height is above 6 m.

Ref.

Paragraph 10 of the annex to MSC/Circ.686.

SC 191 (cont)

Table 1 – Means of access for oil tankers, resolution MSC.158(78), paragraph 1.1.2

1.1.2 at least one continuous longitudinal permanent means of access at each side of the tank. One of these accesses shall be at a minimum of 1.6 m to a maximum of 6 m below the deck head and the other shall be at a minimum of 1.6 m to a maximum of 3 m below the deck head;

Interpretation

There is need to provide continuous longitudinal permanent means of access when the deck longitudinals and deck transverses are fitted on deck but supporting brackets are fitted under the deck.

SC 191 (cont)

Table 1 – Means of access for oil tankers, resolution MSC.158(78), paragraph 1.1.3

1.1.3 access between the arrangements specified in .1 and .2 and from the main deck to either .1 or .2.

Interpretation

Means of access to tanks may be used for access to the permanent means of access for inspection.

Technical Background

As a matter of principle, in such a case where the means of access can be utilised for the purpose of accessing structural members for inspection there is no need of duplicated installation of the MA.

SC 191 (cont)

Table 1 – Means of access for oil tankers, resolution MSC.158(78), paragraph 1.1.4

1.1.4 continuous longitudinal permanent means of access which are integrated in the structural member on the stiffened surface of a longitudinal bulkhead, in alignment, where possible, with horizontal girders of transverse bulkheads are to be provided for access to the transverse webs unless permanent fittings are installed at the uppermost platform for use of alternative means as defined in paragraph 3.9 of the Technical provisions for inspection at intermediate heights;

Interpretation

The permanent fittings required to serve alternative means of access such as wire lift platform, that are to be used by crew and surveyors for inspection shall provide at least an equal level of safety as the permanent means of access stated by the same paragraph. These means of access shall be carried on board the ship and be readily available for use without filling of water in the tank.

Therefore, rafting is not to be acceptable under this provision.

Alternative means of access are to be part of Access Manual which is to be approved on behalf of the flag State.

For water ballast tanks of 5 m or more in width, such as on an ore carrier, side shell plating shall be considered in the same way as "longitudinal bulkhead".

SC 191 (cont)

Table 1 – Means of access for oil tankers, resolution MSC.158(78), paragraph 2.1

2 Water ballast wing tanks of less than 5 m width forming double side spaces and their bilge hopper sections

Access to the underdeck structure

2.1 For double side spaces above the upper knuckle point of the bilge hopper sections, permanent means of access are to be provided in accordance with .1 and .2:

Interpretation

Section 2 of Table 1 is also to be applied to wing tanks designed as void spaces.

Paragraph 2.1.1 represents requirements for access to underdeck structures, while paragraph 2.1.2 is a requirement for access for survey and inspection of vertical structures on longitudinal bulkheads (transverse webs).

Technical Background

Regulation II-1/3-6.2.1 requires each space to be provided with means of access. Though void spaces are not addressed in the technical provisions contained in resolution MSC.158(78) it is arguable whether MA is not required in void spaces. MA or portable means of access are necessary arrangement to facilitate inspection of the structural condition of the space and the boundary structure. Therefore the requirements of Section 2 of Table 1 is to be applied to double hull spaces even designed as void spaces.

SC 191 (cont)

Table 1 – Means of access for oil tankers, resolution MSC.158(78), paragraph 2.1.1

2. Wing water ballast tanks less than 5 m width forming double side spaces and their bilge hopper sections

Access to the underdeck structure

2.1.1 Where the vertical distance between horizontal uppermost stringer and deck head is 6 m or more, one continuous permanent means of access shall be provided for the full length of the tank with a means to allow passing through transverse webs installed a minimum of 1.6 m to a maximum of 3 m below the deck head with a vertical access ladder at each end of tank;

Interpretation

1. For a tank, the vertical distance between horizontal upper stringer and deck head of which varies at different sections, item 2.1.1 is to be applied to such sections that falls under the criteria.

2. The continuous permanent means of access may be a wide longitudinal, which provides access to critical details on the opposite side by means of platforms as necessary on web frames. In case the vertical opening of the web frame is located in way of the open part between the wide longitudinal and the longitudinal on the opposite side, platforms shall be provided on both sides of the web frames to allow safe passage through the web frame.

3. Where two access hatches are required by SOLAS regulation II-1/3-6.3.2, access ladders at each end of the tank are to lead to the deck.

Technical Background

Interpretation 1: The interpretation of varied tank height in item 1 of Table 1 is applied to the vertical distance between horizontal upper stringer and deck head for consistency.

SC 191 (cont)

Table 1 – Means of access for oil tankers, resolution MSC.158(78), paragraph 2.1.2

2.1.2 continuous longitudinal permanent means of access, which are integrated in the structure, at a vertical distance not exceeding 6 m apart; and

Interpretation

The continuous permanent means of access may be a wide longitudinal, which provides access to critical details on the opposite side by means of platforms as necessary on webframes. In case the vertical opening of the web is located in way of the open part between the wide longitudinal and the longitudinal on the opposite side, platforms shall be provided on both sides of the web to allow safe passage through the web.

A "reasonable deviation", as noted in TP, paragraph 1.4, of not more than 10% may be applied where the permanent means of access is integral with the structure itself.

SC 191 (cont)

Table 1 – Means of access for oil tankers, resolution MSC.158(78), paragraph 2.2

2.2 For bilge hopper sections of which the vertical distance from the tank bottom to the upper knuckle point is 6 m and over, one longitudinal permanent means of access shall be provided for the full length of the tank. It shall be accessible by vertical permanent means of access at both ends of the tank.

Interpretation

1. Permanent means of access between the longitudinal continuous permanent means of access and the bottom of the space is to be provided.

2. The height of a bilge hopper tank located outside of the parallel part of vessel is to be taken as the maximum of the clear vertical distance measured from the bottom plating to the hopper plating of the tank.

3. The foremost and aftmost bilge hopper ballast tanks with raised bottom, of which the height is 6 m and over, a combination of transverse and vertical MA for access to the upper knuckle point for each transverse web is to be accepted in place of the longitudinal permanent means of access.

Technical Background

Interpretation 2: The bilge hopper tanks at fore and aft of cargo area narrow due to raised bottom plating and the actual vertical distance from the bottom of the tank to hopper plating of the tank is more appropriate to judge if a portable means of access could be utilized for the purpose.

Interpretation 3: in the foremost or aftmost bilge hopper tanks where the vertical distance is 6 m or over but installation of longitudinal permanent means of access is not practicable permanent means of access of combination of transverse and vertical ladders provides an alternative means of access to the upper knuckle point.

SC 191 (cont)

Table 2 – Means of access for bulk carriers, resolution MSC.158(78), paragraph 1.1

1 Cargo holds

Access to underdeck structure

1.1 Permanent means of access shall be fitted to provide access to the overhead structure at both sides of the cross deck and in the vicinity of the centreline. Each means of access shall be accessible from the cargo hold access or directly from the main deck and installed at a minimum of 1.6 m to a maximum of 3 m below the deck.

Interpretation

1. Means of access shall be provided to the crossdeck structures of the foremost and aftermost part of the each cargo hold.

2. Interconnected means of access under the cross deck for access to three locations at both sides and in the vicinity of the centerline is to be acceptable as the three means of access.

3. Permanent means of access fitted at three separate locations accessible independently, one at each side and one in the vicinity of the centerline is to be acceptable.

4. Special attention is to be paid to the structural strength where any access opening is provided in the main deck or cross deck.

5. The requirements for bulk carrier cross deck structure is also to be considered applicable to ore carriers.

Technical Background

Pragmatic arrangements of the MA are provided.

SC 191 (cont)

Table 2 – Means of access for bulk carriers, resolution MSC.158(78), paragraph 1.3

1.3 Access to the permanent means of access to overhead structure of the cross deck may also be via the upper stool.

Interpretation

Particular attention is to be paid to preserve the structural strength in way of access opening provided in the main deck or cross deck.

SC 191 (cont)

Table 2 – Means of access for bulk carriers, resolution MSC.158(78), paragraph 1.4

1.4 Ships having transverse bulkheads with full upper stools with access from the main deck which allows monitoring of all framing and plates from inside, do not require permanent means of access of the cross deck.

Interpretation

"Full upper stools" are understood to be stools with a full extension between top side tanks and between hatch end beams.

SC 191 (cont)

Table 2 – Means of access for bulk carriers, resolution MSC.158(78), paragraph 1.5

1.5 Alternatively, movable means of access may be utilized for access to the overhead structure of cross deck if its vertical distance is 17 m or less above the tank top.

Interpretation

1. The movable means of access to the underdeck structure of cross deck need not necessarily be carried on board the vessel. It is sufficient if it is made available when needed.

2. The requirements for bulk carrier cross deck structure is also to be considered applicable to ore carriers.

SC 191 (cont)

Table 2 – Means of access for bulk carriers, resolution MSC.158(78), paragraph 1.6

Access to vertical structures

1.6 Permanent means of vertical access shall be provided in all cargo holds and built into the structure to allow for an inspection of a minimum of 25 % of the total number of hold frames port and starboard equally distributed throughout the hold including at each end in way of transverse bulkheads. But in no circumstance shall this arrangement be less than 3 permanent means of vertical access fitted to each side (fore and aft ends of hold and mid-span). Permanent means of vertical access fitted between two adjacent hold frames is counted for an access for the inspection of both hold frames. A means of portable access may be used to gain access over the sloping plating of lower hopper ballast tanks.

Interpretation

The maximum vertical distance of the rungs of vertical ladders for access to hold frames is to be 350 mm.

If safety harness is to be used, means are to be provided for connecting the safety harness in suitable places in a practical way.

Technical Background

The maximum vertical distance of the rungs of 350 mm is applied with a view to reducing trapping cargoes.

SC 191 (cont)

Table 2 – Means of access for bulk carriers, resolution MSC.158(78), paragraph 1.7

1.7 In addition, portable or movable means of access shall be utilized for access to the remaining hold frames up to their upper brackets and transverse bulkheads.

Interpretation

Portable, movable or alternative means of access also is to be applied to corrugated bulkheads.

SC 191 (cont)

Table 2 – Means of access for bulk carriers, resolution MSC.158(78), paragraph 1.8

1.8 Portable or movable means of access may be utilized for access to hold frames up to their upper bracket in place of the permanent means required in 1.6. These means of access shall be carried on board the ship and readily available for use.

Interpretation

Readily available means;-

Able to be transported to location in cargo hold and safely erected by ship's staff.

SC 191 (cont)

Table 2 – Means of access for bulk carriers, resolution MSC.158(78), paragraph 2.3

2.3 Three permanent means of access, fitted at the end bay and middle bay of each tank, shall be provided spanning from tank base up to the intersection of the sloping plate with the hatch side girder. The existing longitudinal structure may be used as part of this means of access.

Interpretation

If the longitudinal structures on the sloping plate are fitted outside of the tank a means of access is to be provided.

SC 191 (cont)

Table 2 – Means of access for bulk carriers, resolution MSC.158(78), paragraph 2.5

Bilge hopper tanks

2.5 For each bilge hopper tank of which the height is 6 m and over, one longitudinal continuous permanent means of access shall be provided along the side shell webs and installed at a minimum of 1.2 m below the top of the clear opening of the web ring with a vertical access ladder in the vicinity of each access to the tank.

Interpretation

1. The height of a bilge hopper tank located outside of the parallel part of vessel is to be taken as the maximum of the clear vertical height measured from the bottom plating to the hopper plating of the tank.

2. It is to be demonstrated that portable means for inspection can deployed and made readily available in the areas where needed.

SC 191 (cont)

Table 2 – Means of access for bulk carriers, resolution MSC.158(78), paragraph 2.5.2

Bilge hopper tanks

2.5.2 Alternatively, the longitudinal continuous permanent means of access can be located through the upper web plating above the clear opening of the web ring, at a minimum of 1.6 m below the deck head, when this arrangement facilitates more suitable inspection of identified structurally critical areas. An enlarged longitudinal frame can be used for the purpose of the walkway.

Interpretation

A wide longitudinal frame of at least 600 mm clear width may be used for the purpose of the longitudinal continuous permanent means of access. The foremost and aftermost bilge hopper ballast tanks with raised bottom, of which the height is 6 m and over, a combination of transverse and vertical MA for access to the sloping plate of hopper tank connection with side shell plating for each transverse web can be accepted in place of the longitudinal permanent means of access.

SC 191 (cont)

Table 2 – Means of access for bulk carriers, resolution MSC.158(78), paragraph 2.6

2.6 If no access holes are provided through the transverse ring webs within 600 mm of the tank base and the web frame rings have a web height greater than 1 m in way of side shell and sloping plating, then step rungs/grab rails shall be provided to allow safe access over each transverse web frame ring.

Interpretation

The height of web frame rings is to be measured in way of side shell and tank base.

Technical Background

In the bilge hopper tank the sloping plating is above the opening, while the movement of the surveyor is along the bottom of the tank. Therefore the measurement of 1 m is to be taken from the bottom of the tank.

End of Document

SC 226 (Nov 2008) (Rev.1 Dec 2012)

IACS Unified Interpretations (UI) ~~for~~ on the application of SOLAS regulations to conversions of Single-Hull Oil Tankers to Double-Hull Oil Tankers or Bulk Carriers ~~Single Hull Tanker to Double Hull Tanker or Bulk Carrier/Ore Carrier~~

Reference table of the clarification of the applicability of SOLAS regulations

No.	Reg.	Title/Content	Note
1	II-1/1.3	Alterations and modifications of a major character	As amended by MSC.216(82)
2	II-1/3.2, 2 & 3.2, 4	Protective coatings of dedicated seawater ballast tanks in all types of ships and double-side skin spaces of bulk carriers	As amended by MSC.216(82)
3	II-1/3-6	Access to and within spaces in, and forward of, the cargo area of oil tankers and bulk carriers	As amended by MSC.194(80)
4	II-1/3-8	Towing and Mooring Equipment	As amended by MSC.194(80)
5	II-1/Part B & Part B-1	~~Part B:~~ Subdivision and stability ~~Part B-1: Stability~~	As amended by MSC.216(82)
6	II-2/1.3	Repairs, alterations, modifications and outfitting	
7	III/1.4.2	Alterations and modifications of a major character	
8	III/31.1.8	Survival craft and rescue boats ~~Free fall lifeboats~~	
9	V/22	Navigation bridge visibility	
10	XII/4	Damage stability requirements applicable to bulk carriers	
~~11~~	XII/5.1 & 5.2	Structural strength of bulk carriers	
~~12~~	XII/6.1	Structural and other requirements for bulk carriers	
~~13~~	XII/6.2	Structural and other requirements for bulk carriers	
~~14~~	XII/6.3	Structural and other requirements for bulk carriers	As amended by MSC.216(82) Annex 1
~~15~~	XII/6.4	Structural and other requirements for bulk carriers	As amended by MSC.216(82) Annex 1
~~16~~	XII/7.1	Survey and maintenance of bulk carrier	
~~17~~	XII/7.2	Survey and maintenance of bulk carrier	
~~18~~	XII/8	Information on compliance with requirements for bulk carriers	
~~19~~	XII/9	Requirements for bulk carriers not being capable of complying with regulation 4.3 due to the design configuration of their cargo holds	
~~20~~	XII/10	Solid bulk cargo density declaration	
~~21~~	XII/11	Loading instrument	
~~22~~	XII/12	Hold, ballast and dry space water ingress alarms	
~~23~~	XII/13	Availability of pumping systems	
~~24~~	XII/14	Restrictions from sailing with any hold empty	

Note:

SC 226 (cont)

1. This UI is to be applied by IACS ~~Members and Associates~~Societies when acting as recognized organizations, authorized by flag State Administrations to act on their behalf, unless otherwise advised, from ~~1 January 2009~~1 January 2014.

SC 226 (cont)

SC226.1 Alterations and modifications of a major character SOLAS Chapter II-1 Reg. 1.3 (as amended by MSC.216(82))

SOLAS Chapter II-1, Reg. 1 'Application':

"3 All ships which undergo repairs, alterations, modifications and outfitting related thereto shall continue to comply with at least the requirements previously applicable to these ships. Such ships, if constructed before the date on which any relevant amendments enter into force, shall, as a rule, comply with the requirements for ships constructed on or after that date to at least the same extent as they did before undergoing such repairs, alterations, modifications or outfitting. Repairs, alterations and modifications of a major character and outfitting related thereto shall meet the requirements for ships constructed on or after the date on which any relevant amendments enter into force, in so far as the Administration deems reasonable and practicable."

Interpretation

1. The date on which a conversion occurs for the purposes of determining the applicability of requirements for ships constructed on or after the date on which any relevant amendments enters into force is to be:

   .1 the date on which the contract is placed for the conversion; or

   .2 in the absence of a contract, the date on which the work identifiable with the specific conversion begins; or

   .3 the completion date of the conversion, if that occurs more than three years after the date specified in subparagraph .1 above or 30 months after the date specified in subparagraph .2 above, either as applicable.

2 As for paragraph 1 above, the following applies:

   .1 Where the completion date of the conversion has been subject to delay beyond the period referred to in paragraph 1.3 above due to unforeseen circumstances beyond the control of the builder and the owner, the date on which contract is placed for the conversion or, if applicable, the date on which the work identifiable with the specific conversion begins may be accepted by the Administration in lieu of the completion date of the conversion. The treatment of such ships is to be considered by the Administration on a case-by-case basis, bearing in mind the particular circumstances.

   .2 It is important that ships accepted by the Administration under the provisions of subparagraph .1 above are also to be accepted as such by port States. In order to ensure this, the following practice is recommended to Administrations when considering an application for such a ship:

      .1 the Administration should thoroughly consider applications on a case-by-case basis, bearing in mind the particular circumstances. In doing so in the case of a ship converted in a foreign country, the Administration may require a formal report from the authorities of the country in which the ship was converted, stating that the delay was due to unforeseen circumstances beyond the control of the builder and the owner;

SC 226 (cont)

.2 when a ship is accepted by the Administration under the provisions of subparagraph .1 above, information on the conversion date annotated on the relevant certificates is to be footnoted to indicate that the ship is accepted by the Administration under the unforeseen delay in completion of the conversion provisions of this interpretation; and

.3 the Administration should report to the Organization on the identity of the ship and the grounds on which the ship has been accepted under the unforeseen delay in the completion of the conversion provisions of this interpretation.

~~The date on which such a modification occurs for purposes of determining the applicability of requirements for ships constructed on or after the date on which any relevant amendments enter into force shall be:~~

~~– the date on which the contract is placed for the conversion; or~~

~~– in the absence of a contract, the date on which the work identifiable with the specific conversion begins.~~

For conversions of single-hull oil tankers to double-hull oil tankers or bulk carriers, the following is to apply:

.1 Conversions of single-hull oil tankers to double-hull oil tankers or bulk carriers is to be regarded as modifications of a major character for the purposes of SOLAS chapter II-1.

.2 Repairs, alterations and modifications of a major character include:

.1 Substantial alteration of the dimensions of a ship, for example lengthening of a ship by adding a new midbody. The new midbody is to comply with SOLAS chapter II-1.

.2 A change of ship type, for example an oil tanker converted to a bulk carrier. Any structure, machinery and systems that are added or modified is to comply with SOLAS chapter II-1, taking into account the interpretation of SOLAS chapter II-1 regulations as contained herein.

~~• For Single-Hull Tanker to Double-Hull Tanker or Single-Hull Tanker to Bulk Carrier/Ore Carrier~~

~~i.e.~~

~~1 Conversions of single-hull tankers to double-hull tankers are regarded as modifications of a major character for the purposes of SOLAS chapter II-1.~~

~~2 Repairs, alterations and modifications of a major character include:~~

~~.1 Substantial alteration of the dimensions of a ship, for example:~~

~~Lengthening of a ship by adding a new midbody. The new midbody shall comply with SOLAS chapter II-1.~~

~~.2 A change of ship type, for example:~~

SC 226 (cont)

~~A tanker converted to a bulk carrier. Any structure, machinery and systems that are added or modified shall comply with SOLAS chapter II-1 taking into account the interpretation Reg. 3-2, 2 and Reg. 3-2, 4.~~

SC 226 (cont)

SC226.2 Protective coatings of dedicated seawater ballast tanks in all types of ships and double-side skin spaces of bulk carriers SOLAS Chapter II-1 Reg. 3-2, 2 and Reg. 3-2, 4 (as amended by MSC.216(82))

SOLAS Chapter II-1, Reg. 3-2:

"2 All dedicated seawater ballast tanks arranged in ships and double-side skin spaces arranged in bulk carriers of 150 m in length and upwards shall be coated during construction in accordance with the Performance standard for protective coatings for dedicated seawater ballast tanks in all types of ships and double-side skin spaces of bulk carriers, adopted by the Maritime Safety Committee by resolution MSC.215(82), as may be amended by the Organization, provided that such amendments are adopted, brought into force and take effect in accordance with the provisions of article VIII of the present Convention concerning the amendment procedures applicable to the Annex other than chapter I."

and

"4 Maintenance of the protective coating system shall be included in the overall ship's maintenance scheme. The effectiveness of the protective coating system shall be verified during the life of a ship by the Administration or an organization recognized by the Administration, based on the guidelines developed by the Organization."*

Interpretation

1. For single-hull oil tanker conversion into double-hull oil tanker, SOLAS regulation II-1/3-2 as adopted by resolution MSC.216(82) is to apply to dedicated water ballast tanks if constructed with all structural members being entirely new. If converting existing spaces into water ballast tanks with part of the existing structural members remaining in place, revised SOLAS regulation II-1/3-2 (MSC.216(82)) need not be applied. However, dedicated sea water ballast tanks are to have an efficient corrosion prevention system such as hard protective coatings or equivalent and be of light colour.

2. For single-hull oil tanker conversion into bulk carrier, SOLAS regulation II-1/3-2 as adopted by resolution MSC.216(82) is to apply to dedicated water ballast tanks and double-side skin spaces of bulk carriers if constructed with all structural members being entirely new. If converting existing spaces into dedicated water ballast tanks or double-side skin space of bulk carriers with part of the existing structural members remaining in place, revised SOLAS regulation II-1/3-2 (MSC.216(82)) need not be applied. However, dedicated sea water ballast tanks are to have an efficient corrosion prevention system such as hard protective coatings or equivalent and be of light colour.

~~• For Single-Hull Tanker to Double-Hull Tanker~~

~~SOLAS II-1/3-2 (MSC.216(82)) only applies to dedicated water ballast tanks if constructed with all structural members being entirely new. If converting existing spaces into water ballast tanks with part of the existing structural members remaining in place, revised SOLAS II-1/3-2 (MSC.216(82)) need not be applied.~~

~~• For Single-Hull Tanker to Bulk Carrier/Ore Carrier~~

SC 226 (cont)

~~SOLAS II-1/3-2 (MSC.216(82)) only applies to dedicated water ballast tanks and double-side skin space of bulk carriers if constructed with all structural members being entirely new. If converting existing spaces into dedicated water ballast tanks or double-side skin space of Bulk Carrier with part of the existing structural members remains in place, revised SOLAS II-1/3-2 (MSC.216(82)) need not be applied.~~

SC 226 (cont)

SC226.3 Access to and within spaces in, and forward of, the cargo area of oil tankers and bulk carriers
SOLAS Chapter II-1 Reg. 3-6 (as amended by MSC.194(80))

Regulation texts are not inserted here.

Interpretation

1. For single-hull oil tanker conversion into double-hull oil tanker

1.1 Permanent means of access contained in table 1 of the Technical provisions for means of access for inspections (resolution MSC.158(78)) need not apply. However, if, in the course of conversion, substantial new structures are added, these new structures are to comply with the regulation.

1.2 The term "substantial new structures" means hull structures that are entirely renewed or augmented by new double bottom and/or double-side construction (e.g., replacing the entire structure within cargo area or adding a new double bottom and/or double-side section to the existing cargo area).

1.3 Additionally, an approved Ship Structure Access Manual is to be provided.

2. For single-hull oil tanker conversion into bulk carrier

2.1 Permanent means of access contained in table 2 of the Technical provisions for means of access for inspections (resolution MSC.158(78)) need not apply. However, if, in the course of conversion, substantial new structures are added, these new structures are to comply with the regulation.

2.2 The term "substantial new structures" means hull structures that are entirely renewed or augmented by new double bottom and/or double-side skin construction (e.g., replacing the entire structure within cargo area or adding a new double bottom and/or double-side section to the existing cargo area).

2.3 Additionally, an approved Ship Structure Access Manual is to be provided.

~~• For Single Hull Tanker to Double Hull Tanker~~

~~Permanent means of access contained in table 1 of the Technical provisions for means of access for inspections (resolution MSC.158(78)) need not apply. However, if, in the course of conversion, substantial new structures are added, these new structures shall comply with the regulation.~~

~~The term "substantial new structures" means hull structures that are entirely renewed or augmented by new double bottom and/or double side construction (e.g., replacing the entire structure within cargo area or adding a new double bottom and/or double side section to the existing cargo area).~~

~~Additionally, an approved access manual shall be provided.~~

~~• For Single Hull Tanker to Bulk Carrier/Ore Carrier~~

~~Permanent means of access contained in table 2 of the Technical provisions for means of access for inspections (resolution MSC.158(78)) need not apply. However, if, in the course of~~

SC 226 (cont)

~~conversion, substantial new structures are added, these new structures shall comply with the regulation.~~

~~The term "substantial new structures" means hull structures that are entirely renewed or augmented by new double bottom and/or double-side skin construction (e.g., replacing the entire structure within cargo area or adding a new double bottom and/or double-side section to the existing cargo area).~~

~~Additionally, an approved access manual shall be provided.~~

SC 226 (cont)

SC226.4 Towing and Mooring Equipment
SOLAS Chapter II-1 Reg. 3-8 (as amended by MSC.194(80))

Regulation texts are not inserted here.

Interpretation

For single-hull oil tanker conversion into double-hull oil tanker or bulk carrier

This regulation is to be applied when equipment and fittings for mooring/towing are replaced, modified or the safe working load of the existing equipment and fittings is known. Where the latter cannot be ascertained, alternative compliance with SOLAS regulation II-1/3-8 is to be sought (e.g., the equipment is to be replaced, tested or modified).

- ~~For Single-Hull Tanker to Double-Hull Tanker or Single-Hull Tanker to Bulk Carrier/Ore Carrier~~

~~When existing equipment or fittings are only relocated, this regulation applies only to their supporting structures.~~

~~Except where equipment and fittings for mooring/towing are totally replaced or modified, indication of Safe Work Load and provision of towing and mooring arrangements plan is not required.~~

SC 226 (cont)

SC226.5 ~~Part B: Subdivision and stability; and Part B-1: Stability~~ Subdivision and stability

SOLAS Chapter II-1 Part B and Part B-1 (as amended by MSC.216(82) ~~– to be implemented from 1 January 2009)~~

~~Part~~	~~Reg.~~	~~Title~~	~~Applicable to~~
~~B~~	~~4~~	~~General~~	~~Cargo ships and passenger ships, but shall exclude those cargo ships which are shown to comply with subdivision and damage stability regulations in other instruments developed by the IMO.~~
~~B-1~~	~~5~~	~~Intact stability information~~	~~Cargo ships and passenger ships~~
~~B-1~~	~~5-1~~	~~Stability information to be supplied to the master~~	~~Cargo ships and passenger ships~~
~~B-1~~	~~6~~	~~Required subdivision index *R*~~	~~Cargo ships and passenger ships~~
~~B-1~~	~~7~~	~~Attained subdivision index *A*~~	~~Cargo ships and passenger ships~~
~~B-1~~	~~7-1~~	~~Calculation of the factor p_i~~	~~Cargo ships and passenger ships~~
~~B-1~~	~~7-2~~	~~Calculation of the factor s_i~~	~~Cargo ships and passenger ships~~
~~B-1~~	~~7-3~~	~~Permeability~~	~~Cargo ships and passenger ships~~

Regulation texts are not inserted here.

Interpretation

1. For single-hull oil tanker conversion into double-hull oil tanker

Oil tankers complying with damage stability requirements contained in Annex I to MARPOL 73/78 (except for combination carriers with type B freeboards) may be excluded from the damage stability requirements contained in SOLAS chapter II-1, part B-1.

2. For single-hull oil tanker conversion into bulk carrier

2.1 A bulk carrier which is assigned a B reduced freeboard complying with damage stability requirements contained in regulation 27 of the 1966 Load Line Convention, and resolutions A.320(IX) and A.514(13); or regulation 27 of the 1988 Load Line Protocol, may be excluded from the damage stability requirements contained in SOLAS chapter II-1, part B-1.

2.2 For a bulk carrier which is assigned a B freeboard, SOLAS chapter II-1, Parts B and B-1 are to be applied.

~~• For Single Hull Tanker to Double Hull Tanker~~

~~As Oil Tankers shall comply with MARPOL Annex I Reg. 27 (intact stability) and Reg. 28 (damage stability), SOLAS Part B, B-1 may be excluded.~~

SC 226 (cont)

- ~~For Single-Hull Tanker to Bulk Carrier/Ore Carrier~~

~~For Bulk Carrier/Ore Carrier which is assigned a B reduced freeboard, ICLL 1966 Reg.27 (damage stability) or ICLL Protocol 1988 Reg.27 (damage stability) is applicable. As such, SOLAS II-1 Parts B, B-1 may be excluded.~~

~~For Bulk Carrier/Ore Carrier which is assigned a B freeboard, SOLAS II-1 Part B, B-1 is applicable.~~

SC 226 (cont)

SC226.6 Repairs, alterations, modifications and outfitting SOLAS Chapter II-2 Reg. 1.3

SOLAS Chapter II-2, Reg. 1.3 'Repairs, alterations, modifications and outfitting':

"3.1 All ships which undergo repairs, alterations, modifications and outfitting related thereto shall continue to comply with at least the requirements previously applicable to these ships. Such ships, if constructed before 1 July 2002, shall, as a rule, comply with the requirements for ships constructed on or after that date to at least the same extent as they did before undergoing such repairs, alterations, modifications or outfitting.

3.2 Repairs, alterations and modifications which substantially alter the dimensions of a ship or the passenger accommodation spaces, or substantially increase a ship's service life and outfitting related thereto shall meet the requirements for ships constructed on or after 1 July 2002 in so far as the Administration deems reasonable and practicable."

Interpretation

~~The date on which a such a modification occurs for purposes of determining the applicability of requirements for ships constructed on or after the date on which any relevant amendments enter into force shall be:~~

- ~~the date on which the contract is placed for the conversion; or~~
- ~~in the absence of a contract, the date on which the work identifiable with the specific conversion begins.~~

For single-hull oil tanker conversion into double-hull oil tanker or bulk carrier, new and converted parts are to comply with the latest applicable requirements.

~~• For Single-Hull Tanker to Double-Hull Tanker~~

~~New and converted parts shall comply with the latest applicable requirements.~~

~~• For Single-Hull Tanker to Bulk Carrier/Ore Carrier~~

~~New and converted parts shall comply with the latest applicable requirements.~~

SC 226 (cont)

SC226.7 Alterations and modifications of a major character SOLAS Chapter III Reg. 1.4.2

SOLAS Chapter III, Reg. 1 'Application':

"4 For ships constructed before 1 July 1998, the Administration shall:

.1 .....; and

.2 ensure that when life-saving appliances or arrangements on such ships are replaced or such ships undergo repairs, alterations or modifications of a major character which involve replacement of, or any addition to, their existing life-saving appliances or arrangements, such life-saving appliances or arrangements, in so far as is reasonable and practicable, comply with the requirements of this chapter. However, if a survival craft other than an inflatable liferaft is replaced without replacing its launching appliance, or vice versa, the survival craft or launching appliance may be of the same type as that replaced."

Interpretation

~~The date on which a such a modification occurs for purposes of determining the applicability of requirements for ships constructed on or after the date on which any relevant amendments enter into force shall be:~~

- ~~the date on which the contract is placed for the conversion; or~~
- ~~in the absence of a contract, the date on which the work identifiable with the specific conversion begins.~~

For single-hull oil tanker conversion into double-hull oil tanker or bulk carrier, this to be considered as an alteration or modification of a major character.

- ~~For Single-Hull Tanker to Double-Hull Tanker~~

~~This shall be considered as a major conversion.~~

- ~~For Single-Hull Tanker to Bulk Carrier/Ore Carrier~~

~~This shall be considered as a major conversion.~~

SC 226 (cont)

SC226.8 Survival craft and rescue boats ~~Free-fall lifeboats~~
SOLAS Chapter III Reg. 31.1.8

SOLAS Chapter III, Reg. 31 'Survival craft and rescue boats':

"1.2 In lieu of meeting the requirements of paragraph 1.1, cargo ships may carry:

.1 one or more free-fall lifeboats, complying with the requirements of section 4.7 of the Code, capable of being free-fall launched over the stern of the ship of such aggregate capacity as will accommodate the total number of persons on board; and

.2 in addition, one or more inflatable or rigid liferafts complying with the requirements of section 4.2 or 4.3 of the Code, on each side of the ship, of such aggregate capacity as will accommodate the total number of persons on board. The liferafts on at least one side of the ship shall be served by launching appliances."

and

"1.8 Notwithstanding the requirements of paragraph 1.1, bulk carriers as defined in regulation IX/1.6 constructed on or after 1 July 2006 shall comply with the requirements of paragraph 1.2."

Interpretation

1. For single-hull oil tanker conversion into double-hull oil tanker, this regulation is not relevant.

2. For single-hull oil tanker conversion into bulk carrier, SOLAS regulation III/31.1.8 is to be met as for new ships, except where the space available for fitting and/or launching a free-fall lifeboat in accordance with regulation III/31.1.2.1 is not adequate, in which case the Administration is to be contacted to determine whether or not existing arrangement may be accepted.

~~• For Single Hull Tanker to Double Hull Tanker~~

~~Not relevant.~~

~~• For Single Hull Tanker to Bulk Carrier/Ore Carrier~~

~~Not applicable.~~

SC 226 (cont)

SC226.9 Navigation bridge visibility SOLAS Chapter V Reg. 22

Regulation text is not inserted here.

Interpretation

For single-hull oil tanker conversion into double-hull oil tanker or bulk carrier, the level of visibility possessed by the ship prior to the conversion at the ballast loading condition is to be maintained after the conversion. Where a conversion involves the modification of structural arrangements used to establish minimum bridge visibility, the provisions of SOLAS regulation V/22 is to apply.

~~For Single-Hull Tanker to Double-Hull Tanker~~

~~In ballast loading condition, the visibility standard applicable to the ship prior to conversion is acceptable as equivalent to the ballast loading condition after the conversion. Visibility forward needs to comply with if any changes are made to the fore end structural arrangement. This need not only be related to the fitting of a full forecastle, but could also be affected by aspects such as increasing the sheer and/or step in the upper deck.~~

~~• For Single-Hull Tanker to Bulk Carrier/Ore Carrier~~

~~In ballast loading condition, the visibility standard applicable to the ship prior to conversion is acceptable as equivalent to the ballast loading condition after the conversion. Visibility forward needs to comply with if any changes are made to the fore end structural arrangement. This need not only be related to the fitting of a full forecastle, but could also be affected by aspects such as increasing the sheer and/or step in the upper deck.~~

SC 226 (cont)

SC226.10 Damage stability requirements applicable to bulk carriers

SOLAS regulation XII/4, structural strength of bulk carriers SOLAS regulation XII/5.1 and 5.2, structural and other requirements for bulk carriers SOLAS regulation XII/6.1, XII/6.2, XII/6.3 (MSC.216(82) Annex 1) and XII/6.4 (MSC.216(82) Annex 1), survey and maintenance of bulk carriers SOLAS regulation XII/7.1 and XII/7.2, information on compliance with requirements for bulk carriers SOLAS regulation XII/8, Requirements for bulk carriers not being capable of complying with regulation 4.3 due to the design configuration of their cargo holds SOLAS regulation XII/9, Solid bulk cargo density declaration SOLAS regulation XII/10, Loading instrument SOLAS regulation XII/11, Hold, ballast and dry space water ingress alarms SOLAS regulation XII/12, Availability of pumping systems SOLAS regulation XII/13, Restrictions from sailing with any hold empty SOLAS regulation XII/14

Regulation texts are not inserted here.

~~*"2 Bulk carriers of 150 m in length and upwards of double-side skin construction in which any part of longitudinal bulkhead is located within B/5 or 11.5 m, whichever is less, inboard from the ship's side at right angle to the centreline at the assigned Summer Load Line, designed to carry solid bulk cargoes having a density of 1,000 kg/m^3 and above, constructed on or after 1 July 2006, shall, when loaded to the Summer Load Line, be able to withstand flooding of any one cargo hold in all loading conditions and remain afloat in a satisfactory condition of equilibrium, as specified in paragraph 4."*~~

Interpretation

1. For single-hull oil tanker conversion into double-hull oil tanker, these regulations are not relevant.

2. For single-hull oil tanker conversion into bulk carrier, the provisions of chapter XII applicable for ships constructed on or after the date on which conversion occurs, are to be applied as for a new ship to the entire bulk carrier, i.e. all new and existing parts and spaces, as indicated in the table below.

Table of application of the Regulations of SOLAS Chapter XII to the conversions of Single Hull Tankers to Bulk Carriers/Ore Carriers

SC 226 (cont)

Regulation	Applicability	Note
4.1	Apply	
4.2	Apply, based on the Unified interpretations of SOLAS regulations XII/4.2 and XII/5.2 (MSC.1/Circ.1178).	
4.3	NA	
4.4	NA	This regulation is referred to within regulations 4.1 and 4.2
4.5	NA	
4.6	Apply	
4.7	Apply	
5.1	Apply	
5.2	Apply, based on the Unified interpretations of SOLAS regulations XII/4.2 and XII/5.2 (MSC.1/Circ.1178).	
6.1	NA	
6.2	Apply	
6.3	Apply	
6.4	Apply	
7.1	NA. However, SOLAS regulation XI-1/2 is applicable.	
7.2	Apply	
8.1	Apply	
8.2	NA	
8.3	NA	
9	NA	
10.1	Apply	
10.2	NA	
11.1	Apply	
11.2	NA	
11.3	Apply	
12.1	Apply	
12.2	Apply	
12.3	NA	
13.1	Apply	
13.2	NA	
14	NA	

~~• For Single Hull Tanker to Double Hull Tanker~~

~~Not relevant.~~

~~• For Single Hull Tanker to Bulk Carrier/Ore Carrier~~

~~When the breadth of wing tanks is less than B/5 or 11.5m, whichever is less, this requirement applies to the relevant cargo hold(s) in way of that wing tank.~~

SC 226 (cont)

~~SC226.11 Structural strength of bulk carriers~~
~~SOLAS regulation XII/5.1 and 5.2~~

~~*"1 Bulk carriers of 150 m in length and upwards of single-side skin construction, designed to carry solid bulk cargoes having a density of 1,000 kg/m^3 and above constructed on or after 1 July 1999, shall have sufficient strength to withstand flooding of any one cargo hold to the water level outside the ship in that flooded condition in all loading and ballast conditions, taking also into account dynamic effects resulting from the presence of water in the hold, and taking into account the recommendations adopted by the Organization.*~~

~~*2 Bulk carriers of 150 m in length and upwards of double-side skin construction, in which any part of longitudinal bulkhead is located within B/5 or 11.5 m, whichever is less, inboard from the ship's side at right angle to the centreline at the assigned Summer Load Line, designed to carry bulk cargoes having a density of 1,000 kg/m^3 and above, constructed on or after 1 July 2006, shall comply with the structural strength provisions of paragraph 1."*~~

~~Interpretation~~

~~• For Single Hull Tanker to Double Hull Tanker~~

~~Not relevant.~~

~~• For Single Hull Tanker to Bulk Carrier/Ore Carrier~~

~~When the breadth of wing tanks is less than B/5 or 11.5m, whichever is less, this requirement applies to the relevant cargo hold(s) in way of that wing tank.~~

SC 226 (cont)

~~SC226.12 Structural and other requirements for bulk carriers~~
~~SOLAS regulation XII/6.1~~

~~*"1 Bulk carriers of 150 m in length and upwards of single-side skin construction, carrying solid bulk cargoes having a density of 1,780 kg/m^3 and above, constructed before 1 July 1999, shall comply with the following requirements in accordance with the implementation schedule specified in regulation 3:"*~~

~~Interpretation~~

- ~~For Single-Hull Tanker to Double-Hull Tanker~~

~~Not relevant.~~

- ~~For Single-Hull Tanker to Bulk Carrier/Ore Carrier~~

~~This regulation is not applicable.~~

SC 226 (cont)

SC226.13 Structural and other requirements for bulk carriers
SOLAS regulation XII/6.2

"2 Bulk carriers of 150 m in length and upwards constructed on or after 1 July 2006, shall comply in all areas with double-side skin construction with the following requirements:

.1 Primary stiffening structures of the double-side skin shall not be placed inside the cargo hold space.

.2 Subject to the provisions below, the distance between the outer shell and the inner shell at any transverse section shall not be less than 1,000 mm measured perpendicular to the side shell. The double-side skin construction shall be such as to allow access for inspection as provided in regulation II-1/3-6 and the Technical Provisions referring thereto.

.1 The clearances below need not be maintained in way of cross ties, upper and lower end brackets of transverse framing or end brackets of longitudinal framing.

.2 The minimum width of the clear passage through the double-side skin space in way of obstructions such as piping or vertical ladders shall not be less than 600 mm.

.3 Where the inner and/or outer skins are transversely framed, the minimum clearance between the inner surfaces of the frames shall not be less than 600 mm.

.4 Where the inner and outer skins are longitudinally framed, the minimum clearance between the inner surfaces of the frames shall not be less than 800 mm. Outside the parallel part of the cargo hold length, this clearance may be reduced where necessitated by the structural configuration, but, shall in no case be less than 600 mm.

.5 The minimum clearance referred to above shall be the shortest distance measured between assumed lines connecting the inner surfaces of the frames on the inner and outer skins."

Interpretation

- For Single Hull Tanker to Double Hull Tanker

Not relevant.

- For Single Hull Tanker to Bulk Carrier/Ore Carrier

This regulation applies. For Permanent Means of Access, the requirements contained in table 2 of the Technical provisions for means of access for inspections (resolution MSC.158(78)) shall not apply to tankers converting from single hull to double hull. However, if, in the course of conversion, substantial new structures are added, these new structures shall comply with the regulation. The term "substantial new structures" means hull structures that are entirely renewed or augmented by new double bottom and/or double side construction (e.g., replacing the entire structure within cargo area or adding a new double bottom and/or double side section to the existing cargo area). Additionally, an approved access manual shall be provided.

SC 226 (cont)

~~SC226.14 Structural and other requirements for bulk carriers~~
~~SOLAS regulation XII/6.3 (MSC.216(82) Annex 1)~~

~~*"3 The double-side skin spaces, with the exception of top-side wing tanks, if fitted, shall not be used for the carriage of cargo."*~~

~~Interpretation~~

- ~~For Single-Hull Tanker to Double-Hull Tanker~~

~~Not relevant.~~

- ~~For Single-Hull Tanker to Bulk Carrier/Ore Carrier~~

~~This regulation applies.~~

SC 226 (cont)

~~SC226.15 Structural and other requirements for bulk carriers~~
~~SOLAS regulation XII/6.4 (MSC.216(82) Annex 1)~~

~~*"4 In bulk carriers of 150 m in length and upwards, carrying solid bulk cargoes having a density of 1,000 kg/m^3 and above, constructed on or after 1 July 2006:*~~

~~*.1 the structure of cargo holds shall be such that all contemplated cargoes can be loaded and discharged by standard loading/discharge equipment and procedures without damage which may compromise the safety of the structure;*~~

~~*.2 effective continuity between the side shell structure and the rest of the hull structure shall be assured; and*~~

~~*.3 the structure of cargo areas shall be such that single failure of one stiffening structural member will not lead to immediate consequential failure of other structural items potentially leading to the collapse of the entire stiffened panels."*~~

~~Interpretation~~

~~• For Single Hull Tanker to Double Hull Tanker~~

~~Not relevant.~~

~~• For Single Hull Tanker to Bulk Carrier/Ore Carrier~~

~~The newly constructed parts of converted bulk carriers of 150 m in length and upwards, carrying solid bulk cargoes having a density of 1,000 kg/m^3 and above, constructed on or after 1 July 2006 shall comply.~~

SC 226 (cont)

~~SC226.16 Survey and maintenance of bulk carriers SOLAS regulation XII/7.1~~

~~*"1 Bulk carriers of 150 m in length and upwards of single-side skin construction, constructed before 1 July 1999, of 10 years of age and over, shall not carry solid bulk cargoes having a density of 1,780 kg/m^3 and above unless they have satisfactorily undergone either:*~~

~~*.1 a periodical survey, in accordance with the enhanced programme of inspections during surveys required by regulation XI-1/2; or*~~

~~*.2 a survey of all cargo holds to the same extent as required for periodical surveys in the enhanced programme of inspections during surveys required by regulation XI-1/2."*~~

~~Interpretation~~

~~• For Single-Hull Tanker to Double-Hull Tanker~~

~~Not relevant.~~

~~• For Single-Hull Tanker to Bulk Carrier/Ore Carrier~~

~~This regulation is not applicable.~~

SC 226 (cont)

~~SC226.17 Survey and maintenance of bulk carriers~~
~~SOLAS regulation XII/7.2~~

~~*"2 Bulk carriers shall comply with the maintenance requirements provided in regulation II-1/3-1 and the Standards for owners' inspection and maintenance of bulk carrier hatch covers, adopted by the Organization by resolution MSC.169(79), as may be amended by the Organization, provided that such amendments are adopted, brought into force and take effect in accordance with the provisions of article VIII of the present Convention concerning the amendment procedures applicable to the Annex other than chapter I."*~~

~~Interpretation~~

~~• For Single Hull Tanker to Double Hull Tanker~~

~~Not relevant.~~

~~• For Single Hull Tanker to Bulk Carrier/Ore Carrier~~

~~This regulation shall be applied.~~

SC 226 (cont)

~~SC226.18 Information on compliance with requirements for bulk carriers SOLAS regulation XII/8~~

~~*"1 The booklet required by regulation VI/7.2 shall be endorsed by the Administration, or on its behalf, to indicate that regulations 4, 5, 6 and 7, as appropriate, are complied with.*~~

~~*2 Any restrictions imposed on the carriage of solid bulk cargoes having a density of 1,780 kg/m^3 and above in accordance with the requirements of regulations 6 and 14 shall be identified and recorded in the booklet referred to in paragraph 1.*~~

~~*3 A bulk carrier to which paragraph 2 applies shall be permanently marked on the side shell at midships, port and starboard, with a solid equilateral triangle having sides of 500 mm and its apex 300 mm below the deck line, and painted a contrasting colour to that of the hull."*~~

~~Interpretation~~

- ~~For Single Hull Tanker to Double Hull Tanker~~

~~Not relevant.~~

- ~~For Single Hull Tanker to Bulk Carrier/Ore Carrier~~

~~This regulation shall be applied.~~

SC 226 (cont)

~~SC226.19 Requirements for bulk carriers not being capable of complying with regulation 4.3 due to the design configuration of their cargo holds~~

~~SOLAS regulation XII/9~~

~~*"For bulk carriers constructed before 1 July 1999 being within the application limits of regulation 4.3, which have been constructed with an insufficient number of transverse watertight bulkheads to satisfy that regulation, the Administration may allow relaxation from the application of regulations 4.3 and 6, on condition that they shall comply with the following requirements:*~~

~~*.1 for the foremost cargo hold, the inspections prescribed for the annual survey in the enhanced programme of inspections during surveys required by regulation XI-1/2 shall be replaced by the inspections prescribed therein for the intermediate survey of cargo holds;*~~

~~*.2 they are provided with bilge well high water level alarms in all cargo holds, or in cargo conveyor tunnels, as appropriate, giving an audible and visual alarm on the navigation bridge, as approved by the Administration or an organization recognized by it in accordance with the provisions of regulation XI-1/1; and*~~

~~*.3 they are provided with detailed information on specific cargo hold flooding scenarios. This information shall be accompanied by detailed instructions on evacuation preparedness under the provisions of section 8 of the International Safety Management (ISM) Code and be used as the basis for crew training and drills."*~~

~~Interpretation~~

~~• For Single Hull Tanker to Double Hull Tanker~~

~~Not relevant.~~

~~• For Single Hull Tanker to Bulk Carrier/Ore Carrier~~

~~This regulation is not applicable.~~

SC 226 (cont)

~~SC226.20 Solid bulk cargo density declaration~~
~~SOLAS regulation XII/10~~

~~*"1 Prior to loading bulk cargo on bulk carriers of 150 m in length and upwards, the shipper shall declare the density of the cargo, in addition to providing the cargo information required by regulation VI/2.*~~

~~*2 For bulk carriers to which regulation 6 applies, unless such bulk carriers comply with all relevant requirements of this chapter applicable to the carriage of solid bulk cargoes having a density of 1,780 kg/m^3 and above, any cargo declared to have a density within the range 1,250 kg/m^3 to 1,780 kg/m^3 shall have its density verified by an accredited testing organization."*~~

~~Interpretation~~

~~• For Single-Hull Tanker to Double-Hull Tanker~~

~~Not relevant.~~

~~• For Single-Hull Tanker to Bulk Carrier/Ore Carrier~~

~~This regulation shall be applied.~~

SC 226 (cont)

SC226.21 Loading instrument
SOLAS regulation XII/11

"Loading instrument
(Unless provided otherwise, this regulation applies to bulk carriers regardless of their date of construction)

1 Bulk carriers of 150 m in length and upwards shall be fitted with a loading instrument capable of providing information on hull girder shear forces and bending moments, taking into account the recommendation adopted by the Organization.

2 Bulk carriers of 150 m in length and upwards constructed before 1 July 1999 shall comply with the requirements of paragraph 1 not later than the date of the first intermediate or periodical survey of the ship to be carried out after 1 July 1999.

3 Bulk carriers of less than 150 m in length constructed on or after 1 July 2006 shall be fitted with a loading instrument capable of providing information on the ship's stability in the intact condition. The computer software shall be approved for stability calculations by the Administration and shall be provided with standard conditions for testing purposes relating to the approved stability information."

Interpretation

- For Single Hull Tanker to Double Hull Tanker

Not relevant.

- For Single Hull Tanker to Bulk Carrier/Ore Carrier

This regulation shall be applied.

SC 226 (cont)

~~SC226.22 Hold, ballast and dry space water ingress alarms~~
~~SOLAS regulation XII/12~~

~~*"Hold, ballast and dry space water ingress alarms*~~
~~*(This regulation applies to bulk carriers regardless of their date of construction)*~~

~~*1 Bulk carriers shall be fitted with water level detectors:*~~

~~*.1 in each cargo hold, giving audible and visual alarms, one when the water level above the inner bottom in any hold reaches a height of 0.5 m and another at a height not less than 15% of the depth of the cargo hold but not more than 2 m. On bulk carriers to which regulation 9.2 applies, detectors with only the latter alarm need be installed. The water level detectors shall be fitted in the aft end of the cargo holds. For cargo holds which are used for water ballast, an alarm overriding device may be installed. The visual alarms shall clearly discriminate between the two different water levels detected in each hold;*~~

~~*.2 in any ballast tank forward of the collision bulkhead required by regulation II-1/12, giving an audible and visual alarm when the liquid in the tank reaches a level not exceeding 10% of the tank capacity. An alarm overriding device may be installed to be activated when the tank is in use; and*~~

~~*.3 in any dry or void space other than a chain cable locker, any part of which extends forward of the foremost cargo hold, giving an audible and visual alarm at a water level of 0.1 m above the deck. Such alarms need not be provided in enclosed spaces the volume of which does not exceed 0.1% of the ship's maximum displacement volume.*~~

~~*2 The audible and visual alarms specified in paragraph 1 shall be located on the navigation bridge.*~~

~~*3 Bulk carriers constructed before 1 July 2004 shall comply with the requirements of this regulation not later than the date of the annual, intermediate or renewal survey of the ship to be carried out after 1 July 2004, whichever comes first."*~~

~~Interpretation~~

~~• For Single Hull Tanker to Double Hull Tanker~~

~~Not relevant.~~

~~• For Single Hull Tanker to Bulk Carrier/Ore Carrier~~

~~This regulation shall be applied.~~

SC 226 (cont)

~~SC226.23 Availability of pumping systems~~
~~SOLAS regulation XII/13~~

~~"*Availability of pumping systems*~~
~~*(This regulation applies to bulk carriers regardless of their date of construction)*~~

~~*1 On bulk carriers, the means for draining and pumping ballast tanks forward of the collision bulkhead and bilges of dry spaces any part of which extends forward of the foremost cargo hold shall be capable of being brought into operation from a readily accessible enclosed space, the location of which is accessible from the navigation bridge or propulsion machinery control position without traversing exposed freeboard or superstructure decks. Where pipes serving such tanks or bilges pierce the collision bulkhead, valve operation by means of remotely operated actuators may be accepted, as an alternative to the valve control specified in regulation II-1/12, provided that the location of such valve controls complies with this regulation.*~~

~~*2 Bulk carriers constructed before 1 July 2004 shall comply with the requirements of this regulation not later than the date of the first intermediate or renewal survey of the ship to be carried out after 1 July 2004, but, in no case, later than 1 July 2007."*~~

~~Interpretation~~

~~• For Single-Hull Tanker to Double-Hull Tanker~~

~~Not relevant.~~

~~• For Single-Hull Tanker to Bulk Carrier/Ore Carrier~~

~~This regulation shall be applied.~~

SC 226 (cont)

~~SC226.24 Restrictions from sailing with any hold empty~~
~~SOLAS regulation XII/14~~

~~*"Bulk carriers of 150 m in length and upwards of single-side skin construction, carrying cargoes having a density of 1,780 kg/m^3 and above, if not meeting the requirements for withstanding flooding of any one cargo hold as specified in regulation 5.1 and the Standards and criteria for side structures of bulk carriers of single-side skin construction, adopted by the Organization by resolution MSC.168(79), as may be amended by the Organization, provided that such amendments are adopted, brought into force and take effect in accordance with the provisions of article VIII of the present Convention concerning the amendment procedures applicable to the Annex other than chapter I, shall not sail with any hold loaded to less than 10% of the hold's maximum allowable cargo weight when in the full load condition, after reaching 10 years of age. The applicable full load condition for this regulation is a load equal to or greater than 90% of the ship's deadweight at the relevant assigned freeboard."*~~

~~Interpretation~~

~~• For Single Hull Tanker to Double Hull Tanker~~

~~Not relevant.~~

~~• For Single Hull Tanker to Bulk Carrier/Ore Carrier~~

~~This regulation is not applicable.~~

End of Document

SC234 Initial Statutory Surveys at New Construction

(Apr 2009) (Corr.1 Jul 2010) (Rev.1 Feb 2014) (Rev.2 Dec 2014)

1. Scope

The scope of this UI is to define the requirements for the initial statutory surveys at new construction as detailed in IMO Resolution A.1053(27), as amended by IMO Resolution A.1076(28), which are not addressed in UR Z23 for the following as applicable:-

(i) International Load Line Certificate (1966)

(ii) Cargo Ship Safety Equipment Certificate

(iii) International Oil Pollution Prevention Certificate

This UI only covers the survey activities required and does not cover the technical interpretations of the statutory requirements or approval of plans, designs and manuals required by the Regulations.

LL76

(Apr 2009) (Corr.1 Jul 2010) (Rev.1 Feb 2014) (Rev.2 Dec 2014)

2. This UI does not cover the requirements for type approval or certification at vendor's works and for which evidence of acceptance is to be provided as indicated in the survey tables.

MPC96

(Apr 2009) (Corr.1 Jul 2010) (Rev.1 Feb 2014) (Rev.2 Dec 2014)

Note:

1. This UI is to be uniformly implemented by IACS Societies on ships contracted for construction (as defined in IACS PR 29) from 1st July 2010.

2. Rev.1 of this UI is to be uniformly implemented by IACS Societies on ships contracted for construction (as defined in IACS PR 29) from 1 July 2014.

3. Rev.2 of this UI is to be uniformly implemented by IACS Societies on ships contracted for construction (as defined in IACS PR 29) from 1 July 2015.

~~3~~4. The "contracted for construction" date means the date on which the contract to build the vessel is signed between the prospective owner and the shipbuilder. For further details regarding the date of "contract for construction", refer to IACS Procedural Requirement (PR) No. 29.

SC234 (cont)

LL76 (cont)

MPC96 (cont)

3. Definitions used in the survey tables

Survey Item	A description of the survey item considered
Origin of the Requirement	Applicable Statutory Regulation
Approved Drawings /Documentation	Indicates whether approved drawings/documentation is required
Conformity Verification	This verification may consist of an examination of the certificate, a check of the marks or, for products which require type approval, to verify conformity of the product with the approved prototype or certification with Flag Administration requirements
Survey during construction or installation	Indicates whether the witness by surveyor of construction and installation on board is required
Tightness Testing	Indicates whether tightness testing is required to be witnessed by the surveyor for survey item
Survey after construction or installation	Indicates whether the survey item is examined by the Surveyor after completion of its construction and installation on board
Function Test	Indicates whether a survey item or system is to be subjected to a functioning and/or performance test or trial in the presence of a Surveyor, to confirm its satisfactory operation and performance for its intended use after installation on board
Onboard Verification of documentation	Indicates whether the required documentation is to be verified on board by the surveyor
Series of Vessels	As defined by IACS PR 29

4. Application

This UI applies to all vessels for which the statutory certificates listed in paragraph 1 are to be issued at new construction by IACS Societies.

5. Interpretation of the survey requirements are given in Appendix 1

Table 1 – Safety Equipment

Table 2 – Load Line

Table 3 – MARPOL Annex 1

6. Specific flag administration requirements, if any, supersede the requirements contained in this UI.

7. Qualification and monitoring of personnel

The surveys required by this UI shall be carried out by exclusive surveyors of the classification society, as defined in PR5. The surveyors are to be qualified to be able to carry out the tasks and procedures are to be in place to ensure that their activities are monitored. Details are specified in PR6 and PR7.

SC234 (cont)

8. Inspection and test plan for new building activities

The shipbuilder is to provide inspection and test plans for the items which are required to be surveyed and/or tested prior to the commencement of the surveys and/or test.

LL76 (cont)

9. Product and Type Approval Certificates

MPC96 (cont)

The shipbuilder is to provide product and type approval certificates for the applicable items listed in Appendix 1 to be placed on board.

10. Proof of the consistency of surveys

The classification society is to be able to provide evidence, e.g. through records, check lists, inspection and test records, etc. that its surveyors have complied with the requirements of this UI.

Enclosure: Appendix 1

Appendix 1 to UIs SC234, LL76 & MPC96

1. Description

1	A.1053(27), as amended by Resolution A.1076(28), Requirements	
2	Survey Item	A description of the survey item considered
3	Origin of the Requirement	Applicable Statutory Regulation
4	Correspondence with Approved Drawings/Documentation	Indicates whether approved drawings/documentation is required
5	Conformity Verification	This verification may consist of an examination of the certificate, a check of the marks or, for type approved products, to verify conformity of the product with the approved prototype or certification with National Requirements
6	Survey during construction or installation	Indicates whether the witness by surveyor of fabrication and installation on board is required
7	Tightness Testing	Indicates whether tightness testing is required to be witnessed by the surveyor for survey item
8	Survey after construction or installation	Indicates whether the survey item is examined by the Surveyor after completion of its installation on board and/or
9	Function Test	Indicates whether a system is to be subjected to a functioning and/or performance test or trial in the presence of a Surveyor, to confirm its satisfactory operation and performance for its intended use after installation on board
10	Onboard Verification of documentation	Indicates whether the required documentation is to be verified on board by the surveyor

Table 1. Safety Equipment

	A.1053(27), as amended by Resolution A.1076(28), REQUIREMENT	SURVEY ITEM	ORIGIN OF THE REQUIREMENT	CORRESPONDENCE WITH APPROVED DRAWINGS / DOCUMENTATION	CONFORMITY VERIFICATION	INSPECTIONS DURING INSTALLATION	INSPECTION AFTER INSTALLATION	ONBOARD VERIFICATION OF DOCUMENTATION	FUNCTION TEST
(EI) 1.1.3.1	examining the fire pumps and fire main and the disposition of the hydrants, hoses and nozzles and the international shore connection and checking that each fire pump, including the emergency fire pump, can be operated separately so that two jets of water are produced simultaneously from different hydrants at any part of the ship whilst the required pressure is maintained in the fire main and testing that the emergency fire pump has the required capacity, and if the emergency fire pump is the main supply of water for any fixed fire-extinguishing system, checking that the emergency fire pump has the capacity for this system.[1] [1]Refer to the unified interpretation of chapter 12 of the FSS Code, MSC.1/Circ.1388	Fire Pumps	(SOLAS 74/00 reg.II-2/10.2 FSSC chs.2 and 12) (SOLAS 74/88 regs.II-2/4 and 19)	X	X		X		X
		Fire Mains		X					X
		Hydrants		X			X		
		Hoses and Nozzles		X	X		X		
		International Shore Connection		X			X		
(EI) 1.1.3.2	examining the provision and disposition of the fire extinguishers	Fire Extinguishers	(SOLAS 74/00 reg.II-2/10.3 FSSC ch.4) (SOLAS 74/88 reg.II-2/17)	X	X		X		
(EI) 1.1.3.3	examining the fire fighters' outfits and emergency escape breathing devices - EEBDs -	Fire Fighters' Outfits	(SOLAS 74/00 regs.II-2/10.10, 13.3.4 and 13.4.3 FSSC ch.3) (SOLAS 74/88 reg.II-2/17) (BCH Code ch.III Part E)	X	X		X		
		EEBDs - Emergency Escape Breathing Devices		X	X		X		
(EI) 1.1.3.4	checking the operational readiness and maintenance of fire-fighting systems	Operational Readiness and Maintenance of Fire-fighting System	(SOLAS 74/00 reg.II-2/14.1) (SOLAS 74/88 reg.II-2/21)					X	
(EI) 1.1.3.5	examining the fixed fire-fighting system for the machinery, cargo, vehicle, special category and ro-ro spaces, as appropriate, and confirming that the installation tests have been satisfactorily completed and that its means of operation are clearly marked	Fixed Fire fighting systems	(SOLAS 74/00/08 regs.II-2/10.4, 10.5, 10.7 and 20.6.1, FSSC chs.5 to 7)	X	X		X	X	X

	A.1053(27), as amended by Resolution A.1076(28), REQUIREMENT	SURVEY ITEM	ORIGIN OF THE REQUIREMENT	CORRESPONDENCE WITH APPROVED DRAWINGS / DOCUMENTATION	CONFORMITY VERIFICATION	INSPECTIONS DURING INSTALLATION	INSPECTION AFTER INSTALLATION	ONBOARD VERIFICATION OF DOCUMENTATION	FUNCTION TEST
			(SOLAS 74/88 regs.II-2/7 and 53)						
(EI) 1.1.3.6	checking that fixed carbon dioxide fire-extinguishing systems for the protection of machinery spaces and cargo pump-rooms, where applicable, are provided with two separate controls, one for opening of the gas piping and one for discharging the gas from the storage container, each of them located in a release box clearly identified for the particular space		(SOLAS 08 reg.II-2/10.4.1.5)	X			X		X
(EI) 1.1.3.7	examining the fire-extinguishing and special arrangements in the machinery spaces and confirming, as far as practicable and as appropriate, the operation of the remote means of control provided for the opening and closing of the skylights, the release of smoke, the closure of the funnel and ventilation openings, the closure of power-operated and other doors, the stopping of ventilation and boiler forced and induced draft fans and the stopping of oil fuel and other pumps that discharge flammable liquids	Remote means of opening and closing of Skylights	(SOLAS 74/00 regs.II-2/5.2, 8.3, 9.5 and 10.5) (SOLAS 74/88 regs.II-2/7 and 11)	X					X
		Fire Dampers and Funnel opening		X	X				X
		Closure of power operated and other doors		X	X				X
		remote stops for ventilation and boiler fans		X					X
		remote stops for FO pumps		X					X
(EI) 1.1.3.8	examining any fire detection and alarm system and any automatic sprinkler, fire detection and fire alarm system, and any sample extraction smoke detection system and confirming that installation tests have been satisfactorily completed	Fixed Fire Detection System	(SOLAS 74/00/10 regs.II-2/7.2, 7.3, 7.4, 7.5.1, 7.5.5, 19.3.3 and 20.4; FSSC ch.9 and 10) (SOLAS 74/88 regs.II-2/11, 13, 14, 53 and 54)	X	X		X		X
		Fire Alarm System		X	X		X		X
		Automatic Sprinkler		X	X	X	X		X
		Sample extraction smoke detection system		X	X		X		X
(EI) 1.1.3.9	examining the fire-extinguishing system for spaces containing paint and/or flammable liquids and deep-fat cooking equipment in accommodation and service spaces and confirming that installation tests have been satisfactorily completed and that its means of operation are clearly marked	Spaces containing Paint and/or flammable liquids: Fire Extinguishing System	(SOLAS 74/00 regs.II-2/10.6.3 and 10.6.4; FSSC chs.4 to 7) (SOLAS 74/88 reg.II-2/18.7) (BCH Code ch.III Part E)	X			X		
		Deep-Fat Cooking Equipment in Accommodation: Fire Extinguishing System		X			X		
(EI) 1.1.3.10	examining the arrangements for remote closing of valves for oil fuel, lubricating oil and other flammable oils and confirming, as far as practicable and as appropriate, the operation of the remote	Remote Closing Valves for: Oil Fuel	(SOLAS 74/00 reg.II-2/4.2.2.3.4) (SOLAS 74/88 reg.II-2/15.2.5)	X					X
		Remote Closing Valves for:		X					X

	A.1053(27), as amended by Resolution A.1076(28), REQUIREMENT	SURVEY ITEM	ORIGIN OF THE REQUIREMENT	CORRESPONDENCE WITH APPROVED DRAWINGS / DOCUMENTATION	CONFORMITY VERIFICATION	INSPECTIONS DURING INSTALLATION	INSPECTION AFTER INSTALLATION	ONBOARD VERIFICATION OF DOCUMENTATION	FUNCTION TEST
	means of closing the valves on the tanks that contain oil fuel, lubricating oil and other flammable oils	Lubricating Oil							
		Remote Closing Valves for: Other Flammable Oils		X					X
(EI) 1.1.3.11	examining the fire protection arrangements in cargo, vehicle and ro-ro spaces and confirming, as far as practicable and as appropriate, the operation of the means for closing the various openings	Fire Detection and Alarm system	(SOLAS 74/00 regs.II-2/10.7, 20.2.1, 20.3 and 20.6.2) (SOLAS 74/88 reg.II-2/53)	X	X		X		X
		Fixed Fire Extinguishing System		X					X
		Structural Fire Protection		X	X		X		
		Precaution against ignition of flammable vapours in closed vehicle spaces, closed ro-ro spaces and special category spaces		X			X		X
(EI) 1.1.3.11 *bis*	examining, where applicable, the alternative design and arrangements for fire safety or life-saving appliances and arrangements, in accordance with the test and inspection requirements, if any, specified in the approved documentation	Items of fire safety and/or life-saving appliances pertaining the Alternative Design	(SOLAS 00/06 regs. II-2/17 and III/38)	X	X		X		X
(EI) 1.1.3.12	examining, when appropriate, the special arrangements for carrying dangerous goods, including checking the electrical equipment and wiring, the ventilation, the provision of protective clothing and portable appliances and the testing of the water supply, bilge pumping and any water spray system	Water Supply	(SOLAS 74/00/08 reg.II-2/19 (except 19.3.8, 19.3.10 and 19.4) FSSC chs.9 and 10) (SOLAS 74/88 reg.II-2/54)	X					X
		Sources of Ignition		X	X		X		
		Detection System		X	X				X
		Ventilation		X			X		
		Bilge system		X					X
		Personnel Protection		X	X		X		
		Fire Extinguishers		X	X		X		
		Insulation of Machinery space boundaries		X	X		X		
		Water Spray System		X	X	X	X		X
(EI) 1.1.3.13	checking that the life-saving appliances are of international or vivid reddish orange, or a comparably highly visible colour on all parts where this will assist detection at sea		(LSA Code section 1.2.2.6)				X		
(EI) 1.1.3.14	checking the provision and disposition of the survival craft, where applicable, marine evacuation systems and rescue boats	Survival Craft Provision and Disposition	(SOLAS 74/88 regs.III/11 to 16 and 31; LSA Code section	X	X		X		
		Rescue Boat Provision and		X	X		X		

	A.1053(27), as amended by Resolution A.1076(28), REQUIREMENT	SURVEY ITEM	ORIGIN OF THE REQUIREMENT	CORRESPONDENCE WITH APPROVED DRAWINGS / DOCUMENTATION	CONFORMITY VERIFICATION	INSPECTIONS DURING INSTALLATION	INSPECTION AFTER INSTALLATION	ONBOARD VERIFICATION OF DOCUMENTATION	FUNCTION TEST
		Disposition	6.2)						
		Marine Evacuation Systems Provision and Disposition		X	X		X		
(EI) 1.1.3.15	deployment of 50% of the MES after installation	Deployment of Marine Evacuation Systems	(LSA Code paragraph 6.2.2.2)						X
(EI) 1.1.3.16	examining each survival craft, including its equipment. For liferafts provided for easy side to side transfer, verifying that they are less than 185 kg	Survival Craft Design	(SOLAS 74/88 reg.III/31 LSA Code sections 2.5, 3.1 to 3.3 and 4.1 to 4.9) (SOLAS 74/00 reg.III/31.1);		X		X		
		Survival Craft Engine			X				X
		Survival Craft Equipment			X		X		
(EI) 1.1.3.17	examining the embarkation arrangements for each survival craft and the testing of each launching appliance, including overload tests, tests to establish the lowering speed and the lowering of each survival craft to the water with the ship at its lightest sea-going draught, and, where applicable, launching underway at 5 knots, checking the recovery of each lifeboat	Survival Craft Launching and Recovery appliances	(SOLAS 74/00 regs.III/11, 12, 13, 16, 31 and 33 LSA Code section 6.1)		X		X		X
		Survival Craft Embarkation Arrangements			X		X		X
(EI) 1.1.3.18	examining the embarkation arrangements for each marine evacuation device, where applicable, and the launching arrangements, including inspection for lack of side shell opening between the embarkation station and waterline, review of distance to the propeller and other life-saving appliances and ensuring that the stowed position is protected from heavy weather damage, as much as practicable	MES Launching and Recovery appliances	(SOLAS 74/00 reg.III/15; LSA Code section 6.2)	X	X		X		X
		MES Embarkation Arrangements		X			X		
(EI) 1.1.3.19	examining each rescue boat, including its equipment. For inflatable rescue boats, confirming that they are stowed in a fully inflated condition	Rescue Boat Design	(SOLAS 74/88 regs.III/14 and 31; LSA Code sections 2.5, 5.1 and 6.1)		X		X		
		Rescue Boat Engine			X		X		X
		Rescue Boat Equipment			X		X		
(EI) 1.1.3.20	examining the embarkation and recovery arrangements for each rescue boat and testing each launching and recovery appliance, including overload tests, tests to establish the lowering and recovery speeds and ensuring that each rescue boat can be lowered to the water and recovered with the ship at its lightest sea-going	Rescue Boat Launching and Recovery appliances and Arrangements	(SOLAS 74/88 regs.III/14, 17 and 31; LSA Code section 6.1)		X		X		X

	A.1053(27), as amended by Resolution A.1076(28), REQUIREMENT	SURVEY ITEM	ORIGIN OF THE REQUIREMENT	CORRESPONDENCE WITH APPROVED DRAWINGS / DOCUMENTATION	CONFORMITY VERIFICATION	INSPECTIONS DURING INSTALLATION	INSPECTION AFTER INSTALLATION	ONBOARD VERIFICATION OF DOCUMENTATION	FUNCTION TEST
	draught, launching underway at 5 knots								
(EI) 1.1.3.21	testing that the engine of the rescue boat(s) and of each lifeboat, when so fitted, start satisfactorily and operate both ahead and astern	Test of engines of lifeboat and Rescue Boat	(SOLAS 74/00 reg.III/19)						X
(EI) 1.1.3.22	confirming that there are posters or signs in the vicinity of survival craft and their launching stations and containers, brackets, racks and other similar stowage locations for life-saving equipment	Posters or Signs	(SOLAS 74/88 regs.III/9 and 20)				X		
(EI) 1.1.3.23	examining the provision and stowage and checking the operation of portable onboard communications equipment, if provided, and two-way VHF radiotelephone apparatus and search and rescue locating devices	Two-way VHF radiotelephone apparatus	(SOLAS 74/88 regs.II-2/12.2 and III/6)		X		X		X
		Search and rescue locating devices			X		X		X
(EI) 1.1.3.24	examining the provision and stowage of the distress flares and the line-throwing appliance, checking the provision and operation of fixed on board communications equipment, if provided, and testing the means of operation of the general alarm system	Distress Flares and Line-Throwing Appliances	(SOLAS 74/00 regs.III/6 and 18; LSA Code sections 3.1, 7.1 and 7.2)		X		X		
		On board Communications equipment			X		X		X
		General Alarm System		X			X		X
(EI) 1.1.3.25	examining the provision, disposition and stowage of the lifebuoys, including those fitted with self-igniting lights, self-activating smoke signals and buoyant lines, lifejackets, immersion suits and anti-exposure suits	Lifebuoys	(SOLAS 74/00/06 regs.III/7 and 32 to 37; LSA Code sections 2.1, 2.5 and 3.3)	X	X		X		
		Lifebuoys fitted with self-igniting lights		X	X		X		
		Lifebuoys fitted with self-activating smoke signals		X	X		X		
		Lifebuoys fitted with buoyant lines		X	X		X		
		Lifejackets		X	X		X		
		Immersion suits		X	X		X		
		Anti-exposure suits		X	X		X		

	A.1053(27), as amended by Resolution A.1076(28), REQUIREMENT	SURVEY ITEM	ORIGIN OF THE REQUIREMENT	CORRESPONDENCE WITH APPROVED DRAWINGS / DOCUMENTATION	CONFORMITY VERIFICATION	INSPECTIONS DURING INSTALLATION	INSPECTION AFTER INSTALLATION	ONBOARD VERIFICATION OF DOCUMENTATION	FUNCTION TEST
(EI) 1.1.3.26	checking the lighting of the muster and embarkation stations and the alleyways, stairways and exits giving access to the muster and embarkation stations, including when supplied from the emergency source of power	Muster and Embarkation Station Lighting	(SOLAS 74/88 regs.II-1/43 and III/11)				X		X
		Alleyways and Stairways Lighting					X		X
		Exits giving Access to the Muster and Embarkation Stations Lighting					X		X
		Muster and Embarkation Station Lighting from Emergency Source of Power					X		X
		Alleyways and Stairways Lighting from Emergency Source of Power					X		X
		Exits giving Access to the Muster and Embarkation Stations Lighting from Emergency Source of Power					X		X
(EI) 1.1.3.27	examining the provision and positioning and checking the operation of, as appropriate, the navigation lights, shapes and sound signalling equipment	Navigation Lights	(International Regulations for Preventing Collisions at Sea (COLREG) in force, regs.20 to 24, 27 to 30 and 33)	X	X		X		X
		Shapes and Sounds signalling equipment			X		X		X
(EI) 1.1.3.28	checking that the minimum safe distances from the steering and standard magnetic compasses for all electrical equipment are complied with	Bridge	(SOLAS 74/00 regs.V/17 and 19)				X		
(EI) 1.1.3.29	checking the electromagnetic compatibility of electrical and electronic equipment on or in the vicinity of the bridge	Bridge	(SOLAS 74/00 reg.V/17)		X		X		

	A.1053(27), as amended by Resolution A.1076(28). REQUIREMENT	SURVEY ITEM	ORIGIN OF THE REQUIREMENT	CORRESPONDENCE WITH APPROVED DRAWINGS / DOCUMENTATION	CONFORMITY VERIFICATION	INSPECTIONS DURING INSTALLATION	INSPECTION AFTER INSTALLATION	ONBOARD VERIFICATION OF DOCUMENTATION	FUNCTION TEST
(EI) 1.1.3.30	checking, as appropriate, the provision and operation of the following ship borne navigational systems equipment								
(EI) 1.1.3.30 .1	the magnetic compass, including examining the sighting, movement, illumination and a pylorus or compass bearing device	Navigation Equipment: Magnetic Compass	(SOLAS 74/00 reg.V/19)		X		X		
		Navigation Equipment: Pylorus or Compass Bearing Device			X				X
(EI) 1.1.3.30 .2	nautical charts and nautical publications necessary for the intended voyage are available and have been updated, and, where an electronic chart display and information system (ECDIS) is used, the electronic charts have been updated and the required back-up system is provided and updated	Navigation Equipment: ECDIS including back-up arrangements	(SOLAS 74/00/09 reg.V/19)		X				X
		Nautical Charts and Nautical Publications						X	
(EI) 1.1.3.30 .3	global navigation satellite system receiver or terrestrial radio navigation system	Navigation Equipment: GNSS receiver			X				X
(EI) 1.1.3.30 .4	sound reception system, when bridge is totally enclosed	Navigation Equipment: Sound Reception System			X				X
(EI) 1.1.3.30 .5	means of communication to emergency steering position, where provided	Navigation Equipment: Means of communication with Emergency Steering Position		X	X				X
(EI) 1.1.3.30 .6	spare magnetic compass	Navigation Equipment: Spare Magnetic Compass			X		X		
(EI) 1.1.3.30 .7	daylight signalling lamp	Navigation Equipment: Daylight Signalling Lamp			X				X
(EI) 1.1.3.30 .8	echo sounding device	Navigation Equipment: Echo-sounding Device			X				X
(EI) 1.1.3.30 .9	radar(s), including examining the waveguide and cable runs for routeing and protection and the display unit confirming lighting, correct operation of all controls, and functions	Navigation Equipment: Radar Installations			X		X		X

	A.1053(27), as amended by Resolution A.1076(28), REQUIREMENT	SURVEY ITEM	ORIGIN OF THE REQUIREMENT	CORRESPONDENCE WITH APPROVED DRAWINGS / DOCUMENTATION	CONFORMITY VERIFICATION	INSPECTIONS DURING INSTALLATION	INSPECTION AFTER INSTALLATION	ONBOARD VERIFICATION OF DOCUMENTATION	FUNCTION TEST
(EI) 1.1.3.30 .10	electronic plotting aid, automatic tracking aid or automatic radar plotting aid as appropriate, using the appropriate test facilities	Navigation Equipment: Electronic Plotting Aid			X				X
		Navigation Equipment: Automatic Tracking aid(s) or Automatic Radar Plotting Aid			X				X
(EI) 1.1.3.30 .11	speed and distance measuring devices "through the water" and "over the ground"	Navigation Equipment: Speed and Distance measuring Device			X				X
(EI) 1.1.3.30 .12	transmitting heading device providing heading information to radar, plotting aids and automatic identification system equipment and voyage data recorder	Navigation Equipment: Transmitting Heading Device			X				X
(EI) 1.1.3.30 .13	automatic identification system	Navigation Equipment: AIS Automatic Identification System			X				X
(EI) 1.1.3.30 .14	gyrocompass, including examining the alignment of the master and all repeaters	Navigation Equipment: Gyro Compass			X				X
		Navigation Equipment: Gyro Compass Repeaters			X				X
(EI) 1.1.3.30 .15	rudder angle indicator	Navigation Equipment: Rudder Angle Indicator			X				X
(EI) 1.1.3.30 .16	propeller rate of revolution indicator	Navigation Equipment: Propeller rate of Revolution Indicator			X				X
(EI) 1.1.3.30 .17	propeller, operational mode, thrust, and pitch indicator	Navigation Equipment: Variable-Pitch propeller pitch and operational mode indicator			X				X
(EI) 1.1.3.30 .18	rate-of-turn indicator	Navigation Equipment: Rate of Turn Indicator			X				X
(EI) 1.1.3.30 .19	heading or track control system	Navigation Equipment: Heading or Track Control System			X				X

	A.1053(27), as amended by Resolution A.1076(28), REQUIREMENT	SURVEY ITEM	ORIGIN OF THE REQUIREMENT	CORRESPONDENCE WITH APPROVED DRAWINGS / DOCUMENTATION	CONFORMITY VERIFICATION	INSPECTIONS DURING INSTALLATION	INSPECTION AFTER INSTALLATION	ONBOARD VERIFICATION OF DOCUMENTATION	FUNCTION TEST
(EI) 1.1.3.30 .20	BNWAS	Navigation Equipment: BNWAS			X				X
(EI) 1.1.3.31	checking for the provision and operation of the voyage data recorder	VDR - Voyage Data Recorder	(SOLAS 74/00 reg.V/20)		X				X
(EI) 1.1.3.32	checking the record of the voyage data recorder annual performance test	VDR - Voyage Data Recorder	(SOLAS 74/00 reg.V/18)					X	
(EI) 1.1.3.33	checking navigation bridge visibility	Navigation Bridge Visibility	(SOLAS 74/00 reg.V/22)	X					
(EI) 1.1.3.34	checking that a valid conformance test report of the long-range identification and tracking system is available on board	Long-range identification and tracking system	(SOLAS 04 reg.V/19-1)					X	
(EI) 1.1.3.35	checking the provision of the pilot transfer arrangement, the access to the ship's deck and the associated equipment and lighting, checking the ~~and, as appropriate, the deployment or~~ operation of the pilot ladders and ~~hoists/pilot transfer~~ the combination arrangements	Pilot ladders and ~~hoists/pilot transfer~~ the combination arrangements	(SOLAS 74/00/10 reg.V/23)	X	X		X		X
(EI) 1.1.3.36	checking the provision of means of embarkation and disembarkation from ships for use in port and in port-related operations, such as gangways and accommodation ladders	Means of embarkation	(SOLAS 08 reg.II-1/3-9)	X			X		X
(EI) 1.1.3.37	checking, when appropriate, the provision of an appropriate instrument for measuring the concentration of gas or oxygen in the air together with detailed instructions for its use	Instrument for measuring concentration of gas or oxygen	(SOLAS 08 reg.VI/3)		X				
(EI) 1.1.4	Additional requirements for oil tankers								
(EI) 1.1.4.1	checking the deck foam system, including the supplies of foam concentrate, and testing that the minimum number of jets of water at the required pressure in the fire main is obtained (see (EI) 1.1.3.1) when the system is in operation	Deck Foam System: Foam Tanks	(SOLAS 74/00 reg.II-2/10.8; FSSC ch.15) (SOLAS 74/88 reg.II-2/61)	X			X		
		Deck Foam System: Monitors			X		X		X
		Deck Foam System: Applicators			X		X		X
		Deck Foam System: Foam Concentrates			X				
(EI) 1.1.4.2	examining the inert gas system and in particular:	Inert Gas System	(SOLAS 74/00 reg.II-2/4.5.5; FSSC ch.15)	X	X				

	A.1053(27), as amended by Resolution A.1076(28), REQUIREMENT	SURVEY ITEM	ORIGIN OF THE REQUIREMENT	CORRESPONDENCE WITH APPROVED DRAWINGS / DOCUMENTATION	CONFORMITY VERIFICATION	INSPECTIONS DURING INSTALLATION	INSPECTION AFTER INSTALLATION	ONBOARD VERIFICATION OF DOCUMENTATION	FUNCTION TEST
			(SOLAS 74/88 reg.II-2/62)						
(EI) 1.1.4.2.1	examining externally for any sign of gas or effluent leakage	Signs of Gas or effluent Leakage					X		X
(EI) 1.1.4.2.2	confirming the proper operation of both inert gas blowers	Inert Gas Blowers							X
(EI) 1.1.4.2.3	observing the operation of the scrubber-room ventilation system	Scrubber Room Ventilation							X
(EI) 1.1.4.2.4	checking the deck water seal for automatic filling and draining	Deck Water Seal					X		X
(EI) 1.1.4.2.5	examining the operation of all remotely operated or automatically controlled valves and, in particular, the flue gas isolating valves	Remote or Automatic Control Valves							X
		Flue Gas Isolating Valve					X		X
(EI) 1.1.4.2.6	observing a test of the interlocking feature of soot blowers	Interlocking of soot Blowers							X
(EI) 1.1.4.2.7	observing that the gas pressure-regulating valve automatically closes when the inert gas blowers are secured	Gas Pressure-Regulating Valve							X
(EI) 1.1.4.2.8	checking, as far as practicable, the following alarms and safety devices of the inert gas system using simulated conditions where necessary:								X
(EI) 1.1.4.2.8.1	high oxygen content of gas in the inert gas main	Test for Alarms and Safety Devices Inert Gas System							X
(EI) 1.1.4.2.8.2	low gas pressure in the inert gas main	Test for Alarms and Safety Devices Inert Gas System							X

	A.1053(27), as amended by Resolution A.1076(28), REQUIREMENT	SURVEY ITEM	ORIGIN OF THE REQUIREMENT	CORRESPONDENCE WITH APPROVED DRAWINGS / DOCUMENTATION	CONFORMITY VERIFICATION	INSPECTIONS DURING INSTALLATION	INSPECTION AFTER INSTALLATION	ONBOARD VERIFICATION OF DOCUMENTATION	FUNCTION TEST
(EI) 1.1.4.2. 8.3	low pressure in the supply to the deck water seal	Test for Alarms and Safety Devices Inert Gas System							X
(EI) 1.1.4.2. 8.4	high temperature of gas in the inert gas main	Test for Alarms and Safety Devices Inert Gas System							X
(EI) 1.1.4.2. 8.5	low water pressure or low water-flow rate	Test for Alarms and Safety Devices Inert Gas System							X
(EI) 1.1.4.2. 8.6	accuracy of portable and fixed oxygen-measuring equipment by means of calibration gas	Test for Alarms and Safety Devices Inert Gas System			X				X
(EI) 1.1.4.2. 8.7	high water level in the scrubber	Test for Alarms and Safety Devices Inert Gas System							X
(EI) 1.1.4.2. 8.8	failure of the inert gas blowers	Test for Alarms and Safety Devices Inert Gas System							X
(EI) 1.1.4.2. 8.9	failure of the power supply to the automatic control system for the gas regulating valve and to the instrumentation for continuous indication and permanent recording of pressure and oxygen content in the inert gas main	Test for Alarms and Safety Devices Inert Gas System							X
(EI) 1.1.4.2. 8.10	high pressure of gas in the inert gas main	Test for Alarms and Safety Devices Inert Gas System							X
(EI) 1.1.4.2. 9	checking the proper operation of the inert gas system on completion of the checks listed above	IGS Operation						X	
(EI) 1.1.4.3	examining the fixed fire-fighting system for the cargo pump room, confirming that the installation tests have been satisfactorily completed and that its means of operation are clearly marked and, when appropriate, checking the operation of the remote means for closing the various openings	Cargo Pump Room Fire Extinguishing	(SOLAS 74/00 reg.II-2/10.9; FSSC chs.5, 6, 7 and 8, as applicable)	X			X		
		Cargo Pump Room Means of Closing Various Opening					X		X

	A.1053(27), as amended by Resolution A.1076(28), REQUIREMENT	SURVEY ITEM	ORIGIN OF THE REQUIREMENT	CORRESPONDENCE WITH APPROVED DRAWINGS / DOCUMENTATION	CONFORMITY VERIFICATION	INSPECTIONS DURING INSTALLATION	INSPECTION AFTER INSTALLATION	ONBOARD VERIFICATION OF DOCUMENTATION	FUNCTION TEST
(EI) 1.1.4.4	examining the protection of the cargo pump-rooms and confirming that the installation tests have been satisfactorily completed	temperature sensing devices	(SOLAS 74/00 reg.II-2/4.5.10) (SOLAS 74/88 regs.II-2/55 to 58)	X	X				X
		Interlock between lighting and ventilation							X
		monitoring of hydrocarbon gas			X				X
		Bilge monitoring							X
(EI) 1.1.4.5	examining, for all tankers, the arrangements for cargo tank protection		(SOLAS 74/00/10 regs. II-2/4.5.3, 4.5.6, and 10.8; FSSC chs. 14 and 15) (SOLAS 74/88 regs. II-2/60 and 62);	X	X	X	X	X	X
		Inert gas plant		X	X	X	X	X	X
		Fixed deck foam fire-extinguishing systems		X	X	X	X	X	X
(EI) 1.1.4.6	checking, for all tankers, the provision of at least one portable instrument for measuring oxygen and one for measuring flammable vapour concentrations together with a sufficient set of spares, and suitable means for the calibration of these instruments (SOLAS 10 reg. II-2/4.5.7.1);	Portable instrument for Gas measurement and detection	(SOLAS 10 reg. II-2/4.5.7.1)		X			X	X
(EI) 1.1.4.7	examining the arrangements for gas measurement in double-hull spaces and double-bottom spaces, including the fitting of permanent gas sampling lines, where appropriate	Arrangements for gas measurement in double-hull spaces and double-bottom spaces	(SOLAS 10 reg. II-2/4.5.7.2)	X		X		X	X
(EI) 1.1.4.8	examining, for oil tankers of 20,000 tonnes deadweight and above, the fixed hydrocarbon gas detection systems for measuring hydrocarbon gas concentrations in all ballast tanks and void spaces of double-hull and double-bottom spaces adjacent to the cargo tanks, including the forepeak tank and any other tanks and spaces under the bulkhead deck adjacent to cargo tanks, and confirming that the installation tests have been satisfactorily completed	Arrangements for fixed hydrocarbon gas detection systems in double-hull and double-bottom spaces of oil tankers	(SOLAS 10 reg. II-2/4.5.7.3 and FSSC ch. 16)	X		X		X	X
(EI) 1.1.5.1	confirming that the fire control plans are permanently exhibited or, alternatively, emergency booklets have been provided and that a duplicate of the plans or the emergency booklet are available in a prominently marked enclosure external to the ship's deckhouse	Required Documentations	(SOLAS 74/00 reg.II-2/15.2.4) (SOLAS 74/88 reg.II-2/20)					X	
(EI) 1.1.5.2	confirming that maintenance plans have been provided	Required Documentations	(SOLAS 74/00 regs.II-2/14.2.2 and					X	

	A.1053(27), as amended by Resolution A.1076(28), REQUIREMENT	SURVEY ITEM	ORIGIN OF THE REQUIREMENT	CORRESPONDENCE WITH APPROVED DRAWINGS / DOCUMENTATION	CONFORMITY VERIFICATION	INSPECTIONS DURING INSTALLATION	INSPECTION AFTER INSTALLATION	ONBOARD VERIFICATION OF DOCUMENTATION	FUNCTION TEST
			14.4)						
(EI) 1.1.5.3	confirming that the training manuals and the fire safety operational booklets have been provided	Required Documentations	(SOLAS 74/00 regs.II-2/15.2.3, 16.2 and 16.3)					X	
(EI) 1.1.5.3 *bis*	confirming that, where applicable, the approved documentation for the alternative design and arrangement is on board	Items of fire safety and/or life-saving appliances pertaining the Alternative Design	(SOLAS 00/06 regs. II-2/17 and III/38)	X	X		X	X	X
(EI) 1.1.5.4	confirming, where appropriate, that the ship is provided with a document indicating compliance with the special requirement for carrying dangerous goods	Required Documentations	(SOLAS 74/00 reg.II-2/19.4) (SOLAS 74/88 reg.II-2/54(3))					X	
(EI) 1.1.5.5	confirming that emergency instructions are available for each person on board, that the muster list is posted in conspicuous places and they are in a language understood by the persons on board	Required Documentations	(SOLAS 74/00 regs.III/8 and 37)					X	
(EI) 1.1.5.6	confirming that the training manual and training aids for the life-saving appliances have been provided and are available in the working language of the ship	Required Documentations	(SOLAS 74/00 reg.III/35)					X	
(EI) 1.1.5.7	confirming that the instructions for on board maintenance of the life-saving appliances have been provided	Required Documentations	(SOLAS 74/88 reg.III/36)					X	
(EI) 1.1.5.8	confirming that a table or curve of residual deviations for the magnetic compass has been provided, and that a diagram of the radar installations shadow sectors is displayed	Required Documentations	(SOLAS 74/00 reg.V/19)					X	
(EI) 1.1.5.9	checking that operational and, where appropriate, maintenance manuals for all navigational equipment are provided	Required Documentations	(SOLAS 74/00 reg.V/16)					X	
(EI) 1.1.5.9 *bis*	checking that records are provided, identifying any pilot ladders placed into service	Required Documentations	(SOLAS 10 reg. V/23.2.4);		X		X	X	X
(EI) 1.1.5.10	checking that the charts and nautical publications necessary for the intended voyage are available and have been updated	Required Documentations	(SOLAS 74/88 reg.V/27)					X	
(EI) 1.1.5.11	checking that the International Code of Signals and an up-to-date copy of Volume III of the International Aeronautical and Maritime Search and Rescue (IAMSAR) Manual have been provided	Required Documentations	(SOLAS 74/00/02, reg.V/21)					X	
(EI) 1.1.5.12	checking that arrangements are provided to maintain records of navigational activities and daily reporting	Required Documentations	(SOLAS 74/00/03, reg.V/28)					X	

	A.1053(27), as amended by Resolution A.1076(28), REQUIREMENT	SURVEY ITEM	ORIGIN OF THE REQUIREMENT	CORRESPONDENCE WITH APPROVED DRAWINGS / DOCUMENTATION	CONFORMITY VERIFICATION	INSPECTIONS DURING INSTALLATION	INSPECTION AFTER INSTALLATION	ONBOARD VERIFICATION OF DOCUMENTATION	FUNCTION TEST
(EI) 1.1.5.13	checking that the life-saving signals to be used by ships, aircraft or persons in distress are available	Required Documentations	(SOLAS 74/00, reg.V/29)					X	
(EI) 1.1.5.14	confirming that continuous synopsis record is provided	Required Documentations	(SOLAS 74/02, reg. XI-1/5)					X	
(EI) 1.1.6.1	confirming, when appropriate, that the instruction manuals for the inert gas system have been provided	Required Documentations	(FSSC ch.15 paragraph 2.4.4) (SOLAS 74/88, reg. II-2/62.21)					X	
(EI) 1.1.6.2	confirming that the operating and maintenance instructions for the fixed hydrocarbon gas detection system are provided	Required Documents	(SOLAS 10 reg. II-2/4.5.7.3 and FSSC ch. 16)					X	

Table 2. Load Line

	A.1053(27), as amended by A.1076(28), REQUIREMENT	SURVEY ITEM	ORIGIN OF THE REQUIREMENT	CORRESPONSENCE WITH APPROVED DRAWINGS / DOCUMENTATION	CONFORMITY VERIFICATION	SURVEY DURING CONSTRUCTION OR INSTALLATION	TIGHTNESS TEST	SURVEY AFTER CONSTRUCTION OR INSTALLATION	FUNCTION TEST	ON BOARD VERIFIATION OF DOCUMENTATION
(LI) 1.1.1	For the load line the examination of plans and designs should consist of:									
(LI) 1.1.1.2	examining the intact stability, and, where applicable, the damaged stability information and the loading and ballasting information that is to be supplied to the master, and, where not dispensed by the Administration, inclining experimental data	intact stability, and, where applicable, the damaged stability information and the loading and ballasting information	(LLC 66/88/08 regs.1 and 10; IS Code chs.1, 2 and 3)	X						X
(LI) 1.1.2	For the load line the survey during construction and after installation should consist of:									
(LI) 1.1.2.2	confirming that the deck line and load line mark are properly positioned	Positioning of Deck Line and Load Line Mark	(LLC 66/88 regs.4 to 9)	X				X		
(LI) 1.1.2.3	witnessing the inclining experiment or lightweight survey	Inclining Experiment	(LLC 66/88/03 reg.10)	X				X		
(LI) 1.1.2.4	examining the superstructure end bulkheads and the openings therein	Superstructure End Bulkheads	(LLC 66/88 regs.11 and 12)							
		Superstructure Openings		X	X		X	X		
(LI) 1.1.2.5	examining the means of securing the weather tightness of cargo hatchways, other hatchways and other openings on the freeboard and superstructure decks	Freeboard Deck - Means of Securing the weather tightness of Cargo Hatchways	(LLC 66/88 regs. 13 to 18)	X		X	X		X	
		Freeboard Deck - Means of Securing the weather tightness of Other Hatchways		X			X		X	
		Freeboard Deck - Means of Securing the weather tightness of Other Openings		X			X		X	
		Superstructure Deck - Means of Securing the weather tightness of Cargo Hatchways		X		X	X		X	
		Superstructure Deck - Means of		X			X		X	

	A.1053(27), as amended by A.1076(28), REQUIREMENT	SURVEY ITEM	ORIGIN OF THE REQUIREMENT	CORRESPONSENCE WITH APPROVED DRAWINGS / DOCUMENTATION	CONFORMITY VERIFICATION	SURVEY DURING CONSTRUCTION OR INSTALLATION	TIGHTNESS TEST	SURVEY AFTER CONSTRUCTION OR INSTALLATION	FUNCTION TEST	ON BOARD VERIFIATION OF DOCUMENTATION
		Securing the weather tightness of Other Hatchways								
		Superstructure Deck - Means of Securing the weather tightness of Other Openings		X			X		X	
(LI) 1.1.2.6	examining the ventilators and air pipes, including their coamings and closing appliances	Ventilators and air pipes including their coamings and closing appliances	(LLC 66/88 regs.19 and 20)	X	X			X		
(LI) 1.1.2.7	examining the watertight integrity of the closures to any openings in the ship's side below the freeboard deck	Closures to any openings in the ship's side below the freeboard deck	(LLC 66/88 reg.21)	X	X		X	X	X	
(LI) 1.1.2.8	examining the scuppers, inlets and discharges	Scuppers, Inlets and Discharger	(LLC 66/88/03 reg.22)	X	X			X		
(LI) 1.1.2.9	examining the garbage chutes	Garbage chute	(LLC 66/88/03, reg. 22-1)	X		X	X			
(LI) 1.1.2.10	examining the spurling pipes and cable lockers	Spurling Pipe	(LLC 66/88/03, reg. 22-2)	X		X	X			
		Cable Locker		X		X	X			
(LI) 1.1.2.11	examining the side scuttles and deadlights	Side Scuttles and Deadlights	(LLC 66/88 reg.23)	X	X		X	X		
(LI) 1.1.2.12	examining the bulwarks including the provision of freeing ports, special attention being given to any freeing ports fitted with shutters	Bulwarks	(LLC 66/88/03 reg.24, 25)	X				X		
		Freeing Ports		X				X		
		Freeing Ports fitted with shutters		X				X	X	
(LI) 1.1.2.13	examining the guardrails, gangways, walkways and other means provided for the protection of the crew and means for safe passage of crew	Guardrails	(LLC 66/88/03 reg.25, 25-1)	X				X		
		Gangways								
		Walkways								
		Other means								
(LI) 1.1.2.14	examining the special requirements for ships permitted to sail with type "A" or type "B-minus" freeboards	Machinery Casings	(LLC 66/88/03 reg.26, 27)	X			X	X		
		Gangway and Access								
		Hatchways								

	A.1053(27), as amended by A.1076(28), REQUIREMENT	SURVEY ITEM	ORIGIN OF THE REQUIREMENT	CORRESPONSENCE WITH APPROVED DRAWINGS / DOCUMENTATION	CONFORMITY VERIFICATION	SURVEY DURING CONSTRUCTION OR INSTALLATION	TIGHTNESS TEST	SURVEY AFTER CONSTRUCTION OR INSTALLATION	FUNCTION TEST	ON BOARD VERIFIATION OF DOCUMENTATION
		Freeing arrangements								
(LI) 1.1.2.15	checking, when applicable, of the fittings and appliances for timber deck cargoes	Uprights	(LLC 66/88 regs.42 to 45)	X				X		
		Lashings		X						X
		Stability		X						X
		Protection of Crew		X				X		
(LI) 1.1.3.1	checking that the loading and ballasting information has been supplied to the master	Loading and Stability Manual	(LLC 66/88 reg.10)	X						X

Table 3. MARPOL Annex 1

	A.1053(27), as amended by A.1076(28), REQUIREMENT	SURVEY ITEM	ORIGIN OF THE REQUIREMENT	CORRESPONDENCE WITH APPROVED DRAWINGS/DOCUMENTATIONS	CONFORMITY VERIFICATION	SURVEY DURING CONSTRUCTION OR INSTALLATION	SURVEY AFTER CONSTRUCTION OR INSTALLATION	ON BOARD VERIFICATION OF DOCUMENTATION	FUNCTION TEST
Requirements for All Ships									
(OI) 1.1.3.1	confirming the satisfactory installation and operation of, as appropriate, oil filtering equipment and when appropriate the operation of the automatic means provided to stop the discharge of effluent and the satisfactory operation of the alarm - or other installation	oil filtering equipment Automatic Stopping Device Alarm	MARPOL 90/04 Annex I regs. 14 and 15	X	X			X	X
(OI) 1.1.3.2	confirming, when applicable, that the oil content meter and its recording device are operable and that there is a sufficient supply of consumables for the recording device on board	Oil Content Meter	MARPOL 90/04 Annex I regs. 14 and 15		X	X			X
		Recording Device			X	X			X
		Consumables						X	
(OI) 1.1.3.3	testing, where fitted, the automatic stopping device required for discharges in Special Areas	Stopping Device	MARPOL 90/04 Annex I reg. 15						X
(OI) 1.1.3.4	confirming the segregation of the oil fuel and water ballast system and the non-carriage of oil in forepeak tanks	Segregation of WB and Oil Carriage of Oil in FP Tank	MARPOL 90/04 Annex I reg. 16	X		X			
(OI) 1.1.3.5	confirming that the oily residue (sludge) tank and its discharge arrangements are satisfactory and, when the size of the sludge tank is approved on the basis of such installations, confirming the satisfactory operation of homogenizers, sludge incinerators or other recognised means for the control of sludge	Oily residue (sludge) tank	MARPOL 90/04/09 Annex I reg. 12	X			X		
		Discharge Arrangement		X			X		
		Approved Sludge Tank's Size		X			X		
		Incinerators/Homogenisers		X	X		X		X
(OI) 1.1.3.6	confirming the provision of the standard discharge connection	Standard Discharge Connection	MARPOL 90/04 Annex I reg. 13				X		
(OI) 1.1.3.7	confirming oil fuel tank protection arrangements	Tank Arrangements	MARPOL 90/04 Annex I reg. 12A	X		X			

	A.1053(27), as amended by A.1076(28), REQUIREMENT	SURVEY ITEM	ORIGIN OF THE REQUIREMENT	CORRESPONDENCE WITH APPROVED DRAWINGS/DOCUMENTATIONS	CONFORMITY VERIFICATION	SURVEY DURING CONSTRUCTION OR INSTALLATION	SURVEY AFTER CONSTRUCTION OR INSTALLATION	ON BOARD VERIFICATION OF DOCUMENTATION	FUNCTION TEST
Additional Requirements for Oil Tankers									
(OI) 1.1.4.1	confirming that the arrangements of slop tanks or cargo tanks designated as slop tanks and associated piping systems are satisfactory	Slop Tanks	MARPOL 90/04 Annex I regs. 29 and 34	X			X		
		Cargo Tanks designated as slop tanks		X			X		
(OI) 1.1.4.2	confirming the satisfactory installation and operation of the oil discharge monitoring and control system, including any audible or visual alarms, the automatic and manual means to stop the discharge of effluent, the starting interlock and the accuracy of the flow meter and the applicable resolution's requirements for installation survey	Discharge Monitoring and Control System	MARPOL 90/04 Annex I regs. 31 and 34	X	X		X		X
		Audible and Visual Alarms					X		X
		Automatic and manual means to stop discharge of Effluent					X		X
		Starting Interlock					X		X
		Accuracy Flow Meter					X		X
(OI) 1.1.4.3	confirming that the oil content meter and its recording device are operable and that there is a sufficient supply of consumables for the recording device on board	Oil Content meter and recording device	MARPOL 90/04 Annex I regs. 31 and 34		X		X		X
(OI) 1.1.4.4	confirming that the approved oil/water interface detectors are on board and are operational	Oil/water interface detectors	MARPOL 90/04 Annex I reg. 32		X		X		
(OI) 1.1.4.5	confirming that the arrangements of pumps, pipes and valves are in accordance with the requirements for segregated ballast systems and that there are no cross-connections between the cargo and segregated ballast systems	Segregated Ballast Tanks: Pumps, Piping and Valves	MARPOL 90/04 Annex I reg. 18 and 19	X			X		
(OI) 1.1.4.6	where a portable spool piece is provided for the emergency discharge of segregated ballast by connecting the segregated ballast system to a cargo pump, confirming that non-return valves are fitted on the segregated ballast connections and that the spool piece is mounted in a conspicuous position in the pump room with a permanent notice restricting its use	Segregated Ballast Tanks: Emergency Discharge	MARPOL 90/04 Annex I reg. 18	X			X		

	A.1053(27), as amended by A.1076(28), REQUIREMENT	SURVEY ITEM	ORIGIN OF THE REQUIREMENT	CORRESPONDENCE WITH APPROVED DRAWINGS/DOCUMENTATIONS	CONFORMITY VERIFICATION	SURVEY DURING CONSTRUCTION OR INSTALLATION	SURVEY AFTER CONSTRUCTION OR INSTALLATION	ON BOARD VERIFICATION OF DOCUMENTATION	FUNCTION TEST
(OI) 1.1.4.7	testing ballast pipelines that pass through cargo tanks and those cargo pipelines that pass through ballast tanks to ensure there is no cross contamination	Pipelines	MARPOL 90/04 Annex I reg. 18	X			X		
(OI) 1.1.4.8	confirming that the crude oil washing system is installed in accordance with the approved plans and, in particular:		MARPOL 90/04 Annex I regs. 18, 33 and 35	X					
(OI) 1.1.4.8.1	examining crude oil washing piping, pumps, valves and deck mounted washing machines for signs of leakage and to check that all anchoring devices for crude oil washing piping are intact and secure;	Piping, Pumps Valves & Anchoring Devices					X		
(OI) 1.1.4.8.2	carrying out pressure testing of the crude oil washing system to 1.5 times the working pressure;	Pressure Test					X		
(OI) 1.1.4.8.3	confirming in those cases where drive units are not integral with the tank washing machines, that the number of operational drive units specified in the Manual are on board;	Operational Drive Units					X		
(OI) 1.1.4.8.4	checking that, when fitted, steam heaters for water washing can be properly isolated during crude oil washing operations, either by double shut-off valves or by clearly identifiable blanks;	Steam Heaters					X		X
(OI) 1.1.4.8.5	checking that the prescribed means of communication between the deck watch keeper and the cargo control position is operational;	Means of Communication					X		X
(OI) 1.1.4.8.6	confirming that an overpressure relief device (or other approved arrangement) is fitted to the pumps supplying the crude oil washing system;	Overpressure Relief Device					X		X
(OI) 1.1.4.8.7	verifying that flexible hoses for supply of oil to the washing machines on combination carriers are of an approved type, are properly stored and are in good condition;	Flexible Hoses			X		X		

	A.1053(27), as amended by A.1076(28), REQUIREMENT	SURVEY ITEM	ORIGIN OF THE REQUIREMENT	CORRESPONDENCE WITH APPROVED DRAWINGS/DOCUMENTATIONS	CONFORMITY VERIFICATION	SURVEY DURING CONSTRUCTION OR INSTALLATION	SURVEY AFTER CONSTRUCTION OR INSTALLATION	ON BOARD VERIFICATION OF DOCUMENTATION	FUNCTION TEST
(OI) 1.1.4.9	verifying the effectiveness of the crude oil washing system and, in particular:	COW-Crude Oil Washing: Effectiveness	MARPOL 90/04 Annex I reg. 33						
(OI) 1.1.4.9.1	checking that the crude oil washing machines are operable and to observe the proper operation of the washing machines by means of the movement indicators and/or sound patterns or other approved methods;						X		X
(OI) 1.1.4.9.2	checking the effectiveness of the stripping system in appropriate cargo tanks by observing the monitoring equipment and by hand-dipping or other approved means;								X
(OI) 1.1.4.9.3	verifying by internal tank inspection after crude oil washing that the installation and operational procedures laid down in the Operations and Equipment Manual are satisfactory;								X
(OI) 1.1.4.10	confirming that, where there is a crude oil washing system, an inert gas system has been installed and tested in accordance with the requirements of SOLAS 74/88/2000 (see (EI) 1.1.4.2 in Annex 1);	COW-Crude Oil Washing: General			X		X		X
(OI) 1.1.4.11	confirming, as appropriate, that the arrangements for the prevention of oil pollution in the event of collision or stranding are in accordance with the approved plans	Pollution due to Collision or Stranding	MARPOL 90/04 Annex I regs. 19 to 22	X			X		
(OI) 1.1.4.12	confirming that the piping systems associated with the discharge of dirty ballast water or oil-contaminated water are satisfactory	Pumping, Piping and Discharge	MARPOL 90/04 Annex I reg. 30	X			X		
(OI) 1.1.4.13	confirming that the observation and discharge control positions for visually observing the discharge of oil-contaminated water, including the testing of the communication system between the two positions are satisfactory	Observation and Discharge Control	MARPOL 90/04 Annex I reg. 30				X		X

	A.1053(27), as amended by A.1076(28), REQUIREMENT	SURVEY ITEM	ORIGIN OF THE REQUIREMENT	CORRESPONDENCE WITH APPROVED DRAWINGS/DOCUMENTATIONS	CONFORMITY VERIFICATION	SURVEY DURING CONSTRUCTION OR INSTALLATION	SURVEY AFTER CONSTRUCTION OR INSTALLATION	ON BOARD VERIFICATION OF DOCUMENTATION	FUNCTION TEST
(OI) 1.1.4.14	confirming that the means of draining cargo pumps and cargo lines, including the provision of a stripping device and the connections for pumping to the slop or cargo tanks or ashore are satisfactory	Means of Draining and Stripping	MARPOL 90/04 Annex I reg. 30	X			X		
		means for pumping ashore / slop / cargo tanks		X			X		
(OI) 1.1.4.15	confirming that closing devices installed in the cargo transfer system and cargo piping, as appropriate, are satisfactory	Closing arrangements	MARPOL 90/04 Annex I regs. 23 & 26						X
(OI) 1.1.4.16	confirming that the subdivision and stability arrangements, in addition to the provision of (OI) 1.1.4.15, to prevent progressive flooding are satisfactory	Stability Manual Tank Arrangement	MARPOL 90/04 Annex I regs. 23 & 26	X			X	X	
(OI) 1.1.4.17	confirming the arrangements for cargo pump-room bottom protection (double bottom where required)	Tank Arrangements	MARPOL 90/04 Annex I reg. 22	X			X		
Requirements for All Ships									
(OI) 1.1.5.1	confirming that certificates for type approval for the oil filtering equipment and oil content meters are available	Type Approval Certificates	MARPOL 90/04 Annex I reg. 14		X			X	
(OI) 1.1.5.2	confirming that the Oil Record Book (Part I) has been provided	Oil Record Book	MARPOL 90/04 Annex I reg. 17					X	
(OI) 1.1.5.3	confirming that the shipboard oil pollution emergency plan or, in the case of a chemical/product tanker, a shipboard marine pollution emergency plan has been provided	SOPEP/SMPEP	MARPOL 90/04 Annex I reg. 37	X				X	
(OI) 1.1.5.4	confirming, as appropriate, that the Operating and Maintenance manuals for the 15ppm bilge separator and 15ppm bilge alarm are available	Operations Manual						X	
Additional Requirements for Oil Tankers									
(OI) 1.1.6.1	confirming that, if applicable, a Ship to Ship (STS) operations Plan approved by the Administration has been provided	STS operations plan	MARPOL Annex I Reg.41	X				X	

	A.1053(27), as amended by A.1076(28), REQUIREMENT	SURVEY ITEM	ORIGIN OF THE REQUIREMENT	CORRESPONDENCE WITH APPROVED DRAWINGS/DOCUMENTATIONS	CONFORMITY VERIFICATION	SURVEY DURING CONSTRUCTION OR INSTALLATION	SURVEY AFTER CONSTRUCTION OR INSTALLATION	ON BOARD VERIFICATION OF DOCUMENTATION	FUNCTION TEST
(OI) 1.1.6.2	confirming that, if applicable, a Crude Oil Washing Operations and Equipment Manual has been provided	COW-Crude Oil Washing: Operations & Equipment Manual	MARPOL 90/04 Annex I reg. 35	X				X	
(OI) 1.1.6.3	confirming that an operations manual for the oil discharge monitoring and control system has been provided together with any other documentation requested by the applicable resolution	ODM Operation Manual	MARPOL 90/04 Annex I reg. 31	X				X	
(OI) 1.1.6.4	confirming that certificates for type approval for the oil content meters, oil discharge monitoring and control system and oil/water interface detectors are available	Type Approval Certificates	MARPOL 90/04 Annex I regs. 31 and 32					X	
(OI) 1.1.6.5	confirming that an Oil Record Book (Part II) has been provided	Oil Record Book	MARPOL 90/04 Annex I reg. 36					X	
(OI) 1.1.6.6	confirming that the information and data concerning the loading and damage stability has been provided	Loading and Damage Stability Data	MARPOL 90/04 Annex I reg. 28	X				X	
(OI) 1.1.6.7	confirming that the shipboard oil pollution emergency plan or in the case of a chemical/product tanker a shipboard marine pollution emergency plan has been provided	SOPEP/SMPEP	MARPOL 90/04 Annex I reg. 37	X				X	
(OI) 1.1.6.8	confirming, for oil tankers of 5,000 deadweight and above delivered on/after 1 February 2002, that the intact stability has been approved	Stability Information	MARPOL 90/04 Annex I reg. 27	X				X	
(OI) 1.1.6.9	confirming, for oil tankers of 5,000 deadweight and above, that arrangements are in place to provide prompt access to shore-based damage stability and residual structural strength computerized calculation programmes	Shore based emergency support arrangements	MARPOL 90/04 Annex I reg. 37.4					X	
(OI) 1.1.7.1	after satisfactory survey, issuing the International Oil Pollution Prevention Certificate.				X			X	

End of document

SC 244 Load testing of hooks for primary release of lifeboats and rescue boats

(May 2011) (Rev.1 Nov 2012) (Corr.1 Nov 2015)

(IMO Res. MSC.81(70), Part 2, Ch. 5.3.4)

Regulation

5.3.4 The connection of each release gear which is fixed to the boat should be subjected to a load equal to the weight of the boat with its full complement of persons and equipment (or two times the weight of the boat in the case of single fall systems). There should be no damage to the release gear or its connection to the boat.

Interpretation

1. The above regulation applies only to lifeboats and rescue boats launched by falls.

2. The test does not apply to the secondary means of launching for freefall lifeboats.

3. The test may be carried out onboard the ship or onshore, either at the manufacturer's plant or at the shipyard, by using an appropriate mock-up of the launching arrangements which is equivalent to the launching arrangement installed onboard the ship.

4. The "weight of the boat" to be considered for the load in the case of single fall systems is the "weight of the boat with its full complement of persons and equipment", which according to MSC.81(70), Part 2, Paragraph 5.3.4 shall be multiplied by two.

Notes:

1. This UI is to be uniformly implemented by IACS Societies on ships the keels of which are laid from 1 July 2012.

2. Rev.1 of this UI is to be uniformly implemented by IACS Societies on ships the keels of which are laid from 1 January 2014.

End of Document

SC 249 (Oct 2011) (Corr.1 Apr 2012) (Rev.1 Feb 2013)

Implementation of SOLAS II-1, Regulation 3-5 and MSC.1/Circ.1379

SOLAS Chapter II-1, Regulation 3-5

"From 1 January 2011, for all ships, new installation of materials which contain asbestos shall be prohibited."

MSC.1/Circ.1379

"In the context of this regulation, new installation of materials containing asbestos means any new physical installation on board. Any material purchased prior to 1 January 2011 being kept in the ship's store or in the shipyard for a ship under construction, should not be permitted to be installed after 1 January 2011 as a working part."

Unified Interpretations

SOLAS II-1, Regulation 3-5

1. Verification that *"new installation of materials which contain asbestos"* under SOLAS II-1/3-5 is not made on ships requires the Recognized Organization to review asbestos-free declarations and supporting documentation, for the structure, machinery, electrical installations and equipment covered by the SOLAS Convention, which is to be provided to the Recognized Organization by shipyards, repair yards, and equipment manufacturers taking into account appendix 8 of the 2011 Guidelines for the development of the inventory of hazardous materials (resolution MEPC.197(62)) for:

- new construction (keel laid, or at a similar stage of construction, on or after 1 July 2012);

- conversions (contract date for the conversion or, in the absence of a contract, the date on which the work identifiable with the specific conversion begins) on or after 1 July 2012;

NOTES:

1. This ~~UI~~ Unified Interpretation is to be uniformly implemented by IACS Societies ~~as soon as possible, but~~ not later than 1 July 2012.

2. Revision 1 of this Unified Interpretation is to be uniformly implemented by IACS Societies not later than 1 July 2013.

SC 249 (cont)

MSC.1/Circ.1379

2. The phrase *"new installation of materials containing asbestos"* in MSC.1/Circ.1379:

- means that material used (i.e., repaired, replaced, maintained or added) as a working part of the ship as per Annex 1 which is installed on or after 1 July 2012 is required to be documented with an asbestos-free declaration. The Recognized Organization will, in consultation with the Company's nominated person responsible to control asbestos-containing material onboard as per the Safety Management System in accordance with MSC/Circ.1045, audit this documentation during annual safety construction and safety equipment surveys; and

- does not preclude the stowage of material which contains asbestos onboard (e.g., spare parts existing on board as of 1 July 2012).

3. The phrase *"should not be permitted to be installed after 1 January 2011 as a working part"* in MSC.1/Circ.1379 means that replacement, maintenance or addition of materials used for the structure, machinery, electrical installations and equipment covered by the SOLAS Convention which contain asbestos is prohibited.

SC 249 (cont)

Annex 1

Structure and/or equipment	Component
Propeller shafting	Packing with low pressure hydraulic piping flange Packing with casing Clutch Brake lining Synthetic stern tubes
Diesel engine	Packing with piping flange Lagging material for fuel pipe Lagging material for exhaust pipe Lagging material turbocharger
Turbine engine	Lagging material for casing Packing with flange of piping and valve for steam line, exhaust line and drain line Lagging material for piping and valve of steam line, exhaust line and drain line
Boiler	Insulation in combustion chamber Packing for casing door Lagging material for exhaust pipe Gasket for manhole Gasket for hand hole Gas shield packing for soot blower and other hole Packing with flange of piping and valve for steam line, exhaust line, fuel line and drain line Lagging material for piping and valve of steam line, exhaust line, fuel line and drain line
Exhaust gas economizer	Packing for casing door Packing with manhole Packing with hand hole Gas shield packing for soot blower Packing with flange of piping and valve for steam line, exhaust line, fuel line and drain line Lagging material for piping and valve of steam line, exhaust line, fuel line and drain line
Incinerator	Packing for casing door Packing with manhole Packing with hand hole Lagging material for exhaust pipe
Auxiliary machinery (pump, compressor, oil purifier, crane)	Packing for casing door and valve Gland packing Brake lining
Heat exchanger	Packing with casing Gland packing for valve Lagging material and insulation

SC 249 (cont)

Valve	Gland packing with valve, sheet packing with piping flange Gasket with flange of high pressure and/or high temperature
Pipe, duct	Lagging material and insulation
Tank (fuel tank, hot water, tank, condenser), other equipments (fuel strainer, lubricant oil strainer)	Lagging material and insulation
Electric equipment	Insulation material
Ceiling, floor and wall in accommodation area	Ceiling, floor, wall
Fire door	Packing, construction and insulation of the fire door
Inert gas system	Packing for casing, etc.
Air-conditioning system	Sheet packing, lagging material for piping and flexible joint
Miscellaneous	Ropes Thermal insulating materials Fire shields/fire proofing Space/duct insulation Electrical cable materials Brake linings Floor tiles/deck underlay Steam/water/vent flange gaskets Adhesives/mastics/fillers Sound damping Moulded plastic products Sealing putty Shaft/valve packing Electrical bulkhead penetration packing Circuit breaker arc chutes Pipe hanger inserts Weld shop protectors/burn covers Fire-fighting blankets/clothing/equipment Concrete ballast

Note:

The above list ~~above~~ is taken from IMO Resolution MEPC.197(62), Appendix 5, paragraph 2.2.2.1.

End of Document

MPC2 Operational manuals for oil discharge monitoring and control systems

(1988) (Rev.1 Aug 2015)

(Annex I, Regulation 31.4)

31.4 Instructions as to the operation of the system shall be in accordance with an operational manual approved by the Administration. They shall cover manual as well as automatic operations and shall be intended to ensure that at no time shall oil be discharged except in compliance with the conditions specified in regulation 34 of this Annex.

Interpretation

For compliance with Regulation 31.4 of MARPOL - Annex I and Resolution MEPC.108(49) as amended by Resolution MEPC.240(65), the Oil Discharge Monitoring and Control System Operational Manual is to contain all the details necessary to operate and maintain the system and should include at least the following information. The information may be grouped as indicated, or in an equivalent manner.

Introduction : Particulars of the ship, together with the date on which the system was/is to be installed and index to remainder of manual.
Text of Regulations 31 and 34 to be quoted in full.

Section 1 : Manufacturer's equipment manuals for major components of the system. These may include installation, commissioning, operating and fault finding procedures for the oil content monitor.

Section 2 : Operations manual comprising a description of the ship's cargo ballast systems, designated overboard discharges with sampling points, normal operational procedures, automatic inputs, manual inputs (as applicable), starting interlock and discharge valve control (as applicable), override system, audible and visual alarms, outputs recorded and, where required for manual input, flow rate when discharging by gravity and when pumping ballast overboard. It should also include instructions for the discharge of oily water following mal-function of the equipment.
The above information is to be supported by copies of relevant approved diagrams.
Reference may be made to Section 1, where applicable.

Notes:

1. Revision 1 of this Unified Interpretation is to be uniformly implemented by IACS Societies for ships contracted for construction on or after 1 July 2016.

2. The "contracted for construction" date means the date on which the contract to build the vessel is signed between the prospective owner and the shipbuilder. For further details regarding the date of "contract for construction", refer to IACS Procedural Requirement (PR) No. 29.

MPC 2
(cont)

Section 3 : Technical manual comprising fault finding schedules, maintenance record and electrical, pneumatic and hydraulic schematic diagrams and descriptions of the complete system.
Reference may be made to Section 1, where applicable.

Section 4 : Test and check-out procedures to include a functional test at installation and guidance notes for the Surveyors carrying out initial and in-service surveys.
Reference may be made to Section 1, where applicable.

Appendix I : Technical installation specification including location and mounting of components, arrangements for maintaining integrity of 'safe' zones, safety requirements for electrical equipment installed in hazardous zones supported by copies of approved drawings, sample piping layout and sample delay calculations, design and arrangements of sampling probes, flushing arrangements and zero setting.
Reference may be made to Section 1, where applicable.

Appendix II : Copy of Type Approval Certificate and Workshop Certificates for major components.

End of Document

MPC6 Calculation of the aggregate capacity of SBT

(1997)
(Rev.1
Aug
2015)

(Regulation 19.3.4)

19.3.4 The aggregate capacity of ballast tanks

On crude oil tankers of 20,000 tonnes deadweight and above and product carriers of 30,000 tonnes deadweight and above, the aggregate capacity of wing tanks, double bottom tanks, forepeak tanks and after peak tanks shall not be less than the capacity of segregated ballast tanks necessary to meet the requirements of regulation 18 of this Annex. Wing tanks or spaces and double bottom tanks used to meet the requirements of regulation 18 shall be located as uniformly as practicable along the cargo tank length. Additional segregated ballast capacity provided for reducing longitudinal hull girder bending stress, trim, etc. may be located anywhere within the ship.

Interpretation

1. Any ballast carried in localized inboard extensions, indentations or recesses of the double hull, such as bulkhead stools, should be excess ballast above the minimum requirement for segregated ballast capacity according to regulation 18.

2. In calculating the aggregate capacity under regulation 19.3.4, the following should be taken into account:

2.1 the capacity of engine-room ballast tanks should be excluded from the aggregate capacity of ballast tanks;

2.2 the capacity of ballast tank located inboard of double hull should be excluded from the aggregate capacity of ballast tanks (see figure 1).

Notes:

1. This IACS Unified Interpretation was submitted to IMO and is contained in MEPC/Circ. 316 of 25th July 1996.

2. Revision 1 of this Unified Interpretation is to be uniformly implemented by IACS Societies for ships contracted for construction on or after 1 July 2016.

3. The "contracted for construction" date means the date on which the contract to build the vessel is signed between the prospective owner and the shipbuilder. For further details regarding the date of "contract for construction", refer to IACS Procedural Requirement (PR) No. 29.

MPC6
(cont)

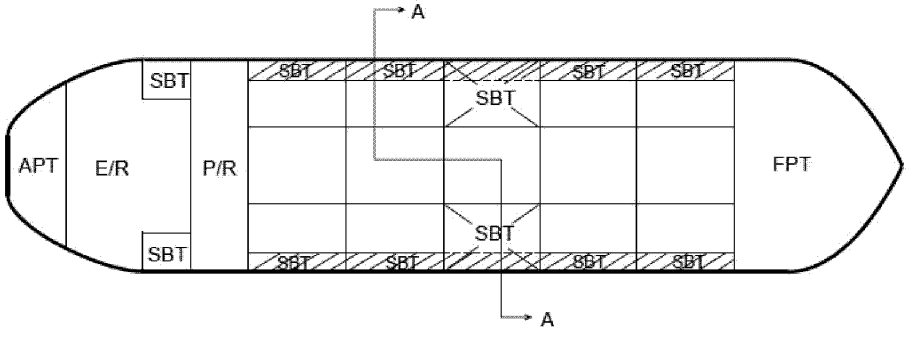

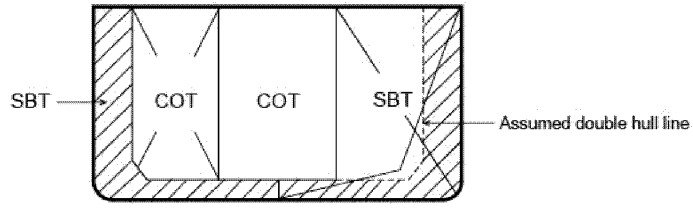

SECTION A-A

Fig. 1

MPC6 2.3 (cont) spaces such as void spaces located in the double hull within the cargo tank length should be included in the aggregate capacity of ballast tanks (see figure 2).

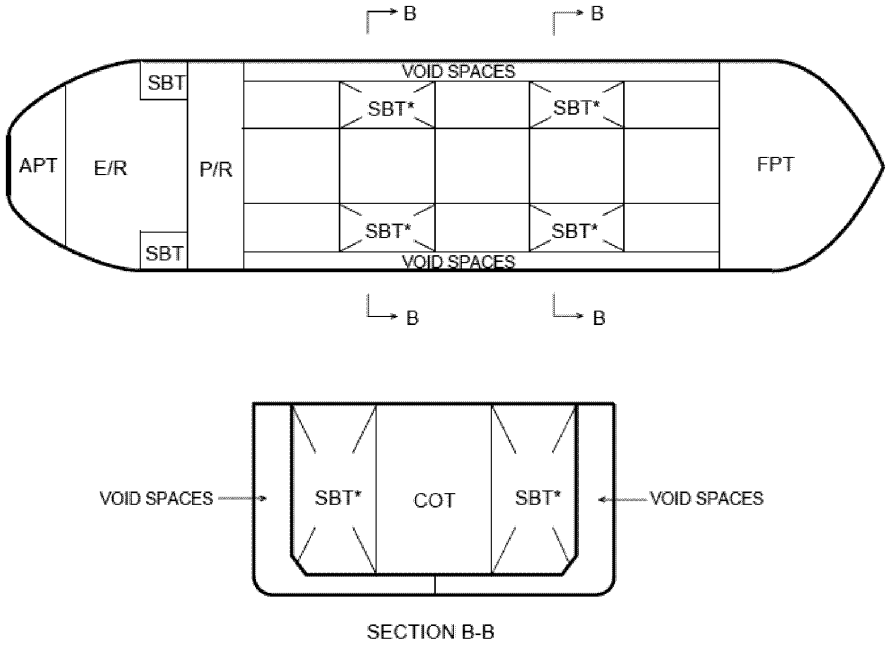

Fig. 2

End of Document

РЕКОМЕНДАЦИИ МАКО

IACS RECOMMENDATIONS

No.47 Shipbuilding and Repair Quality Standard

(1996)
(Rev. 1, 1999)
(Rev.2, Dec. 2004)
(Rev.3, Nov. 2006)
(Rev.4, Aug. 2008)
(Rev.5, Oct. 2010)
(Rev.6, May 2012)
(Rev.7, June 2013)

Part A Shipbuilding and Remedial Quality Standard for New Construction

Part B Repair Quality Standard for Existing Ships

PART A - SHIPBUILDING AND REMEDIAL QUALITY STANDARDS FOR NEW CONSTRUCTION

1. Scope
2. General requirements for new construction
3. Qualification of personnel and procedures
    3.1 Qualification of welders
    3.2 Qualification of welding procedures
    3.3 Qualification of NDE operators
4. Materials
    4.1 Materials for structural members
    4.2 Surface conditions
5. Gas Cutting
6. Fabrication and fairness
    6.1 Flanged longitudinals and flanged brackets
    6.2 Built-up sections
    6.3 Corrugated bulkheads
    6.4 Pillars, brackets and stiffeners
    6.5 Maximum heating temperature on surface for line heating
    6.6 Block assembly
    6.7 Special sub-assembly
    6.8 Shape
    6.9 Fairness of plating between frames
    6.10 Fairness of plating with frames
    6.11 Preheating for welding hull steels at low temperature
7. Alignment
8. Welding Joint Details
    8.1 Typical butt weld plate edge preparation (manual welding and semi-automatic welding)
    8.2 Typical fillet weld plate edge preparation (manual welding and semi-automatic welding)
    8.3 Butt and fillet weld profile (manual welding and semi-automatic welding)
    8.4 Typical butt weld edge preparation (Automatic welding)
    8.5 Distance between welds
9. Remedial
    9.1 Typical misalignment remedial
    9.2 Typical butt weld plate edge preparation remedial (manual welding and semi-automatic welding)
    9.3 Typical fillet weld plate edge preparation remedial (manual welding and semi-automatic welding)
    9.4 Typical fillet and butt weld profile remedial (manual welding and semi-automatic welding)
    9.5 Distance between welds remedial
    9.6 Erroneous hole remedial
    9.7 Remedial by insert plate
    9.8 Weld surface remedial
    9.9 Weld remedial (short bead)

REFERENCES

1. IACS "Bulk Carriers - Guidelines for Surveys, Assessment and Repair of Hull Structure"
2. TSCF "Guidelines for the inspection and maintenance of double hull tanker structures"
3. TSCF "Guidance manual for the inspection and condition assessment of tanker structures"
4. IACS UR W7 "Hull and machinery steel forgings"
5. IACS UR W8 "Hull and machinery steel castings"
6. IACS UR W11 "Normal and higher strength hull structural steel"
7. IACS UR W13 "Thickness tolerances of steel plates and wide flats"
8. IACS UR W14 "Steel plates and wide flats with specified minimum through thickness properties ("Z" quality)"
9. IACS UR W17 "Approval of consumables for welding normal and higher strength hull structural steels"
10. IACS UR W28 "Welding procedure qualification tests of steels for hull construction and marine structures"
11. IACS UR Z10.1 "Hull surveys of oil tankers" and Z10.2 "Hull surveys of bulk carriers" Annex I
12. IACS UR Z23 "Hull survey for new construction"
13. IACS Recommendation No. 12 "Guidelines for surface finish of hot rolled plates and wide flats"
14. IACS Recommendation No. 20 "Non-destructive testing of ship hull steel welds"

1. Scope

It is intended that these standards provide guidance where established and recognized shipbuilding or national standards accepted by the Classification Society do not exist.

1.1 This standard provides guidance on shipbuilding quality standards for the hull structure during new construction and the remedial standard where the quality standard is not met.

Whereas the standard generally applies to

- conventional merchant ship types,
- parts of hull covered by the rules of the Classification Society,
- hull structures constructed from normal and higher strength hull structural steel,

the applicability of the standard is in each case to be agreed upon by the Classification Society.

The standard does generally not apply to the new construction of

- special types of ships as e.g. gas tankers
- structures fabricated from stainless steel or other, special types or grades of steel

1.2 In this standard, both a "Standard" range and a "Limit" range are listed. The "Standard" range represents the target range expected to be met in regular work under normal circumstances. The "Limit" range represents the maximum allowable deviation from the "Standard" range. Work beyond the "Standard" range but within the "Limit" range is acceptable. In cases where no 'limit' value is specified, the value beyond the 'standard' range may be accepted subject to the consideration of the Classification Society.

1.3 The standard covers typical construction methods and gives guidance on quality standards for the most important aspects of such construction. Unless explicitly stated elsewhere in the standard, the level of workmanship reflected herein will in principle be acceptable for primary and secondary structure of conventional designs. A more stringent standard may however be required for critical and highly stressed areas of the hull, and this is to be agreed with the Classification Society in each case. In assessing the criticality of hull structure and structural components, reference is made to ref. 1, 2 and 3.

1.4 Details relevant to structures or fabrication procedures not covered by this standard are to be approved by the Classification Society on the basis of procedure qualifications and/or recognized national standards.

1.5 For use of this standard, fabrication fit-ups, deflections and similar quality attributes are intended to be uniformly distributed about the nominal values. The shipyard is to take corrective action to improve work processes that produce measurements where a skew distribution is evident. Relying upon remedial steps that truncate a skewed distribution of the quality attribute is unacceptable.

2. General requirements for new construction

2.1 In general, the work is to be carried out in accordance with the Classification Society rules and under the supervision of the Surveyor to the Classification Society

2.2 Welding operations are to be carried out in accordance with work instructions accepted by the Classification Society.

2.3 Welding of hull structures is to be carried out by qualified welders, according to approved and qualified welding procedures and with welding consumables approved by the Classification Society, see Section 3. Welding operations are to be carried out under proper supervision by the shipbuilder. The working conditions for welding are to be monitored by the Classification Society in accordance with UR Z23.

3. Qualification of personnel and procedures

3.1 Qualification of welders

3.1.1 Welders are to be qualified in accordance with the procedures of the Classification Society or to a recognized national or international standard. Recognition of other standards is subject to submission to the

Classification Society for evaluation. Subcontractors are to keep records of welders qualification and, when required, furnish valid approval test certificates.

3.1.2 Welding operators using fully mechanized or fully automatic processes need generally not pass approval testing provided that the production welds made by the operators are of the required quality. However, operators are to receive adequate training in setting or programming and operating the equipment. Records of training and operation experience shall be maintained on individual operator's files and records, and be made available to the Classification Society for inspection when requested.

3.2 Qualification of welding procedures

Welding procedures are to be qualified in accordance with URW28 or other recognized standard accepted by the Classification Society.

3.3 Qualification of NDE operators

Personnel performing non-destructive examination for the purpose of assessing quality of welds in connection with new construction covered by this standard, are to be qualified in accordance with Classification Society rules or to a recognized international or national qualification scheme. Records of operators and their current certificates are to be kept and made available to the Surveyor for inspection.

4. Materials

4.1 Materials for Structural Members

All materials, including weld consumables, to be used for the structural members are to be approved by the Classification Society as per the approved construction drawings and meet the respective IACS Unified Requirements. Additional recommendations are contained in the following paragraphs.

All materials used should be manufactured at a works approved by the Classification Society for the type and grade supplied.

4.2 Surface Conditions

4.2.1 Definitions

Minor Imperfections:	Pitting, rolled-in scale, indentations, roll marks, scratches and grooves
Defects:	Cracks, shells, sand patches, sharp edged seams and minor imperfections exceeding the limits of table 1
Depth of Imperfections or defects:	The depth is to be measured from the surface of the product

4.2.2 Acceptance without remedies

Minor imperfections, in accordance with the nominal thickness (t) of the product and the limits described in Table 1, are permissible and may be left as they are.

Imperfection surface area Ratio(%)	15~20%	5~15%	0~5%
t < 20 mm	0.2 mm	0.4 mm	0.5 mm
20 mm ≤ t < 50 mm	0.2 mm	0.6 mm	0.7 mm
50 mm ≤ t	0.2 mm	0.7 mm	0.9 mm

Table 1 Limits for depth of minor imperfection, for acceptance without remedies

Imperfection surface area Ratio (%) is obtained as influenced area / area under consideration (i.e. plate surface area) x 100%.
For isolated surface discontinuities, influenced area is obtained by drawing a continuous line which follows the circumference of the discontinuity at a distance of 20 mm. (Figure 1)
For surface discontinuities appearing in a cluster, influenced area is obtained by drawing a continuous line which follows the circumference of the cluster at a distance of 20 mm. (Figure 2)

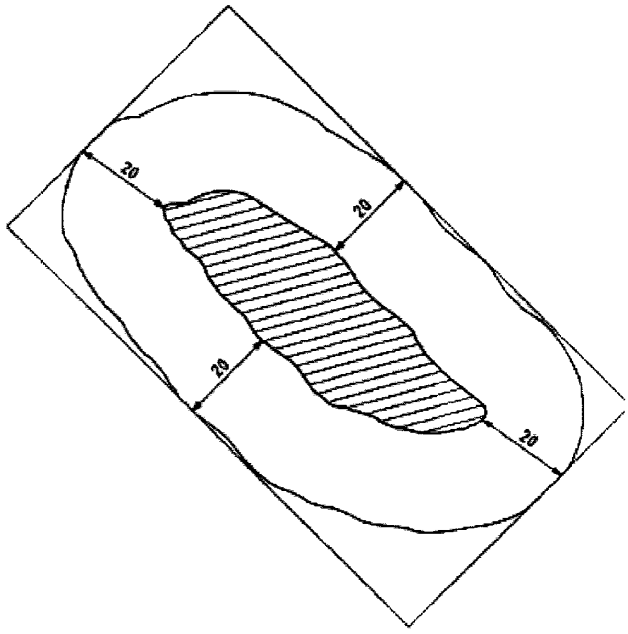

Figure 1 - Determination of the area influenced by an isolated discontinuity
(Ref. Nr. EN 10163-1:2004+AC:2007 E)

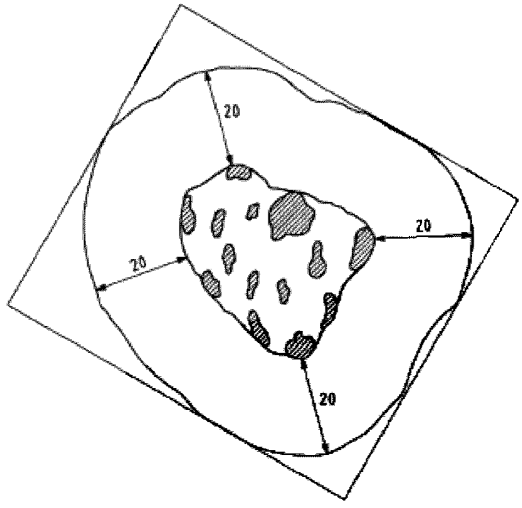

Figure 2 - Determination of the area influenced by clustered discontinuities
(Ref. Nr. EN 10163-1:2004+AC:2007 E)

4.2.3 Remedial of Defects

Defects are to be remedied by grinding and/or welding in accordance with IACS Rec.12.

4.2.4 Further Defects

4.2.4.1 Lamination

Investigation to be carried out at the steelmill into the cause and extent of the detected laminations. Severe lamination is to be remedied by local insert plates. The minimum breadth or length of the plate to be replaced is to be:

- 1600 mm for shell and strength deck plating in way of cruciform or T-joints,
- 800 mm for shell, strength deck plating and other primary members,
- 300 mm for other structural members.

Local limited lamination may be remedied by chipping and/or grinding followed by welding in accordance with sketch (a). In case where the local limited lamination is near the plate surface, the remedial may be carried out as shown in sketch (b). For limitations see paragraph 4.2.2.

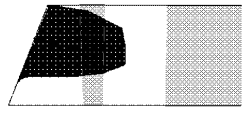

(a)

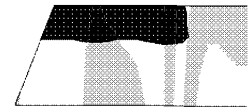

(b)

4.2.4.2 Weld Spatters

Loose weld spatters are to be removed by grinding or other measures to clean metal surface (see Table 9.13), as required by the paint system, on:

- shell plating
- deck plating on exposed decks
- in tanks for chemical cargoes
- in tanks for fresh water and for drinking water
- in tanks for lubricating oil, hydraulic oil, including service tanks

5. Gas Cutting

The roughness of the cut edges is to meet the following requirements:

Free Edges:

	Standard	**Limit**
Strength Members	150 μm	300 μm
Others	500 μm	1000 μm

Welding Edges:

	Standard	**Limit**
Strength Members	400 μm	800 μm
Others	800 μm	1500 μm

6. Fabrication and fairness

6.1 Flanged longitudinals and flanged brackets (see Table 6.1)
6.2 Built-up sections (see Table 6.2)

6.3 Corrugated bulkheads (see Table 6.3)
6.4 Pillars, brackets and stiffeners (see Table 6.4)
6.5 Maximum heating temperature on surface for line heating (see Table 6.5)
6.6 Block assembly (see Table 6.6)
6.7 Special sub-assembly (see Table 6.7)
6.8 Shape (see Table 6.8 and 6.9)
6.9 Fairness of plating between frames (see Table 6.10)
6.10 Fairness of plating with frames (see Table 6.11)
6.11 Preheating for welding hull steels at low temperature (See Table 6.12)

7. Alignment

The quality standards for alignment of hull structural components during new construction are shown in Tables 7.1, 7.2 and 7.3. The Classification Society may require a closer construction tolerance in areas requiring special attention, as follows:

- Regions exposed to high stress concentrations
- Fatigue prone areas
- Detail design block erection joints
- High tensile steel regions

8. Welding Joint Details

Edge preparation is to be qualified in accordance with URW28 or other recognized standard accepted by the Classification Society.

Some typical edge preparations are shown in Table 8.1, 8.2, 8.3, 8.4 and 8.6 for reference.

8.1 Typical butt weld plate edge preparation (manual and semi-automatic welding) for reference - see Table 8.1 and 8.2
8.2 Typical fillet weld plate edge preparation (manual and semi-automatic welding) for reference - see Table 8.3 and 8.4
8.3 Butt and fillet weld profile (manual and semi-automatic welding) - see Table 8.5
8.4 Typical butt weld plate edge preparation (Automatic welding) for reference - see Table 8.6
8.5 Distance between welds - see Table 8.7

9. Remedial

All the major remedial work is subject to reporting by shipbuilder to the Classification Society for approval in accordance with their work instruction for new building.

Some typical remedial works are shown in Tables 9.1 to 9.13.

9.1 Typical misalignment remedial - see Tables 9.1 to 9.3
9.2 Typical butt weld plate edge preparation remedial (manual and semi-automatic welding) - see Table 9.4 and 9.5
9.3 Typical fillet weld plate edge preparation remedial (manual and semi-automatic welding) - see Tables 9.6 to 9.8
9.4 Typical fillet and butt weld profile remedial (manual and semi-automatic welding) - see Table 9.9
9.5 Distance between welds remedial - see Table 9.10
9.6 Erroneous hole remedial - see Table 9.11
9.7 Remedial by insert plate - see Table 9.12
9.8 Weld surface remedial - see Table 9.13
9.9 Weld remedial (short bead) - see Table 9.14

TABLE 6.1 – Flanged Longitudinals and Flanged Brackets

Detail	Standard	Limit	Remarks
Breadth of flange 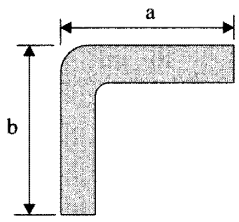 compared to correct size	± 3 mm	± 5 mm	
Angle between flange and web 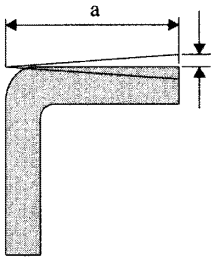 compared to template	± 3 mm	± 5 mm	per 100 mm of a
Straightness in plane of flange and web 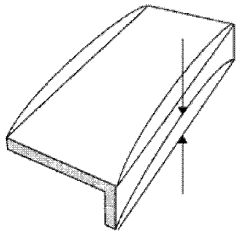 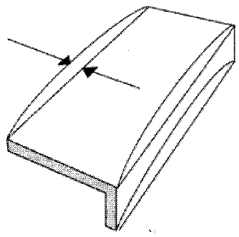	± 10 mm	± 25 mm	per 10 m

TABLE 6.2 – Built Up Sections

Detail	Standard	Limit	Remarks
Frames and longitudinal 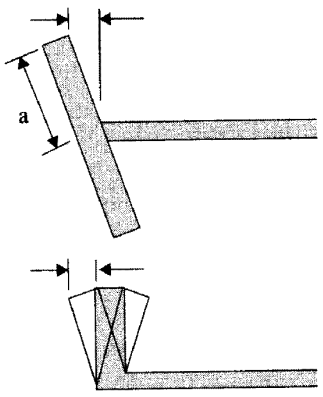	± 1.5 mm	± 3 mm	per 100 mm of a
Distortion of face plate 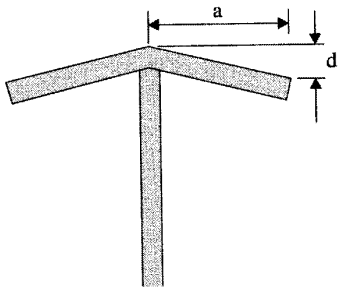	d ≤ 3 + a/100 mm	d ≤ 5 + a/100 mm	
Distortion in plane of web and flange of built up longitudinal frame, transverse frame, girder and transverse web. 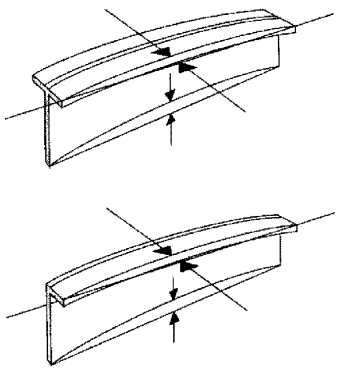	± 10 mm	± 25 mm	per 10 m in length

TABLE 6.3 – Corrugated Bulkheads

Detail	Standard	Limit	Remarks
Mechanical bending 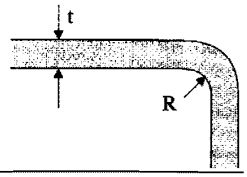	R ≥ 3t mm R ≥ 4.5t mm for CSR ships [Note 1]	2t mm [Note 2]	Material to be suitable for cold flanging (forming) and welding in way of radius
Depth of corrugation 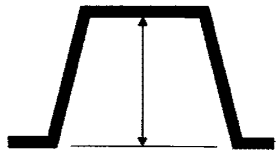	± 3 mm	± 6 mm	
Breadth of corrugation 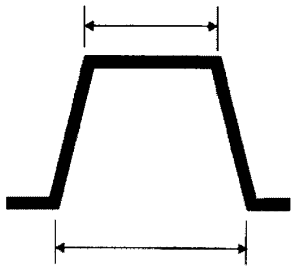	± 3 mm	± 6 mm	
Pitch and depth of swedged corrugated bulkhead compared with correct value 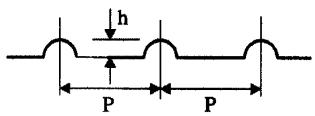	h : ± 2.5 mm Where it is not aligned with other bulkheads P : ± 6 mm Where it is aligned with other bulkheads P : ± 2 mm	h : ± 5 mm Where it is not aligned with other bulkheads P : ± 9 mm Where it is aligned with other bulkheads P : ± 3 mm	

Notes:

1. For CSR Bulk Carriers built under the "Common Structural Rules for Bulk Carriers" with the effective dates of 1 July 2010 and 1 July 2012, the standard is R≥2t mm.
2. For CSR ships, the allowable inside bending radius of cold formed plating may be reduced provided the following requirements are complied with.

When the inside bending radius is reduced below 4.5 times the as-built plate thickness, supporting data is to be provided. The bending radius is in no case to be less than 2 times the as-built plate thickness. As a minimum, the following additional requirements are to be complied with:

a) For all bent plates:

- 100% visual inspection of the bent area is to be carried out.
- Random checks by magnetic particle testing are to be carried out.

b) In addition to a), for corrugated bulkheads subject to lateral liquid pressure:

- The steel is to be of Grade D/DH or higher.

The material is impact tested in the strain-aged condition and satisfies the requirements stated herein. The deformation is to be equal to the maximum deformation to be applied during production, calculated by the formula $t_{as\text{-}built}/(2r_{bdg} + t_{as\text{-}built})$, where $t_{as\text{-}built}$ is the as-built thickness of the plate material and r_{bdg} is the bending radius. One sample is to be plastically strained at the calculated deformation or 5%, whichever is greater and then artificially aged at 250°C for one hour then subject to Charpy V-notch testing. The average impact energy after strain ageing is to meet the impact requirements specified for the grade of steel used.

TABLE 6.4 – Pillars, Brackets and Stiffeners

Detail	Standard	Limit	Remarks
Pillar (between decks) 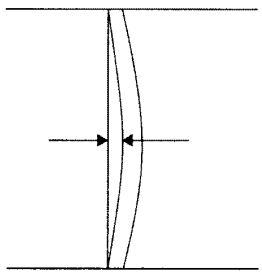	4 mm	6 mm	
Cylindrical structure diameter (pillars, masts, posts, etc.) 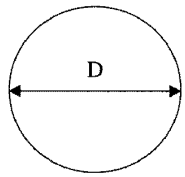	± D/200 mm max. + 5 mm	± D/150 mm max. 7.5 mm	
Tripping bracket and small stiffener, distortion at the part of free edge 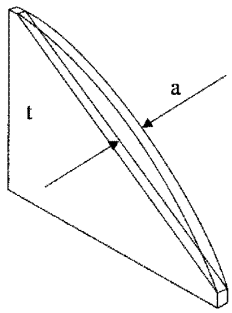	$a \leq t/2$ mm	t	
Ovality of cylindrical structure 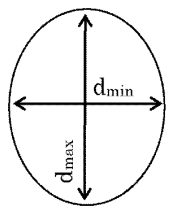		$d_{max} - d_{min} \leq 0.02 \times d_{max}$	

TABLE 6.5 – Maximum Heating Temperature on Surface for Line Heating

Item		Standard	Limit	Remarks
Conventional Process AH32-EH32 & AH36-EH36	Water cooling just after heating	Under 650°C		
TMCP type AH36-EH36 (Ceq.>0.38%)	Air cooling after heating	Under 900°C		
	Air cooling and subsequent water cooling after heating	Under 900°C (starting temperature of water cooling to be under 500°C)		
TMCP type AH32-DH32 & AH36-DH36 (Ceq. ≤ 0.38%)	Water cooling just after heating or air cooling	Under 1000°C		
TMCP type EH32 & EH36 (Ceq. ≤ 0.38%)	Water cooling just after heating or air cooling	Under 900°C		

NOTE:

$$Ceq = C + \frac{Mn}{6} + \frac{Cr + Mo + V}{5} + \frac{Ni + Cu}{15} (\%)$$

TABLE 6.6 – Block Assembly

Item	Standard	Limit	Remarks
Flat Plate Assembly			
Length and Breadth	± 4 mm	± 6 mm	
Distortion	± 10 mm	±20mm	
Squareness	± 5 mm	±10mm	
Deviation of interior members from plate	5 mm	10mm	
Curved plate assembly			
Length and Breadth	± 4 mm	± 8 mm	measured along the girth
Distortion	± 10 mm	± 20 mm	
Squareness	± 10 mm	± 15 mm	
Deviation of interior members from plate	5 mm	10 mm	
Flat cubic assembly			
Length and Breadth	± 4 mm	± 6 mm	
Distortion	± 10 mm	± 20 mm	
Squareness	± 5 mm	± 10 mm	
Deviation of interior members from plate	5 mm	10 mm	
Twist	± 10 mm	± 20 mm	
Deviation between upper and lower plate	± 5 mm	± 10 mm	
Curved cubic assembly			
Length and Breadth	± 4 mm	± 8 mm	measured along with girth
Distortion	± 10 mm	± 20 mm	
Squareness	± 10 mm	± 15 mm	
Deviation of interior members from plate	± 5 mm	± 10 mm	
Twist	± 15 mm	± 25 mm	
Deviation between upper and lower plate	± 7 mm	± 15 mm	

TABLE 6.7 – Special Sub-Assembly

Item	Standard	Limit	Remarks
Distance between upper/lower gudgeon	± 5 mm	± 10 mm	
Distance between aft edge of boss and aft peak bulkhead	± 5 mm	± 10 mm	
Twist of sub-assembly of stern frame	5 mm	10 mm	
Deviation of rudder from shaft center line	4 mm	8 mm	
Twist of rudder plate	6 mm	10 mm	
Flatness of top plate of main engine bed	5 mm	10 mm	
Breadth and length of top plate of main engine bed	± 4 mm	± 6 mm	

NOTE:

Dimensions and tolerances have to fulfill engine and equipment manufacturers' requirements, if any.

TABLE 6.8 – Shape

Detail	Standard	Limit	Remarks
Deformation for the whole length 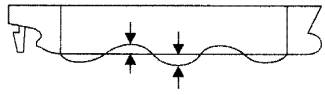	± 50 mm		per 100 m against the line of keel sighting
Deformation for the distance between two adjacent bulkheads 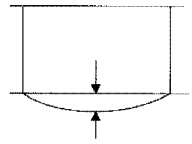	± 15 mm		
Cocking-up of fore body 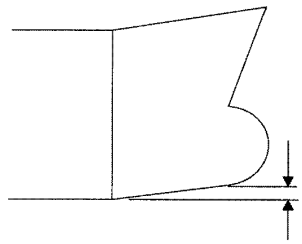	± 30 mm		The deviation is to be measured from the design line.
Cocking-up of aft-body 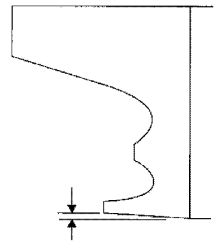	± 20 mm		
Rise of floor amidships 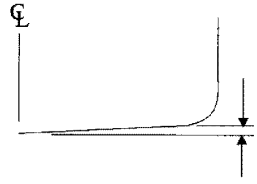	± 15 mm		The deviation is to be measured from the design line.

TABLE 6.9 – Shape

Item	Standard	Limit	Remarks
Length between perpendiculars	±L/1000 mm where L is in mm		Applied to ships of 100 metre length and above. For the convenience of the measurement the point where the keel is connected to the curve of the stem may be substituted for the fore perpendicular in the measurement of the length.
Moulded breadth at midship	±B/1000 mm where B is in mm		Applied to ships of 15 metre breadth and above, measured on the upper deck.
Moulded depth at midship	±D/1000 mm where D is in mm		Applied to ships of 10 metre depth and above, measured up to the upper deck.

TABLE 6.10 – Fairness of Plating Between Frames

Item		Standard	Limit	Remarks
Shell plate	Parallel part (side & bottom shell)	4 mm	8 mm	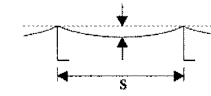
	Fore and aft part	5 mm		
Tank top plate		4 mm		
Bulkhead	Longl. Bulkhead Trans. Bulkhead Swash Bulkhead	6 mm		
Strength deck	Parallel part	4 mm	8 mm	
	Fore and aft part	6 mm	9 mm	
	Covered part	7 mm	9 mm	
Second deck	Bare part	6 mm	8 mm	
	Covered part	7 mm	9 mm	
Forecastle deck poop deck	Bare part	4 mm	8 mm	
	Covered part	6 mm	9 mm	
Super structure deck	Bare part	4 mm	6 mm	
	Covered part	7 mm	9 mm	
House wall	Outside wall	4 mm	6 mm	
	Inside wall	6 mm	8 mm	
	Covered part	7 mm	9 mm	
Interior member (web of girder, etc)		5 mm	7 mm	
Floor and girder in double bottom		5 mm	8 mm	

TABLE 6.11 – Fairness of Plating with Frames

Item		Standard	Limit	Remarks
Shell plate	Parallel part	±2 *l* /1000 mm	±3 *l* /1000 mm	*l* = span of frame (mm) To be measured between on trans. space (min. *l* = 3000 mm)
	Fore and aft part	±3 *l* /1000 mm	±4 *l* /1000 mm	
Strength deck (excluding cross deck) and top plate of double bottom	-	±3 *l* /1000 mm	±4 *l* /1000 mm	
Bulkhead	-		±5 *l* /1000 mm	
Accommodation above the strength deck and others	-	±5 *l* /1000 mm	±6 *l* /1000 mm	
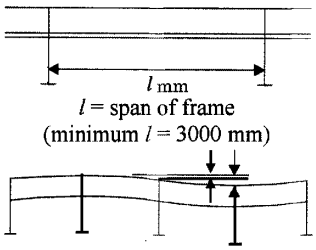 To be measured between one trans. space.				

TABLE 6.12 – Preheating for welding hull steels at low temperature

Item		Standard		Limit	Remarks
		Base metal temperature needed preheating	Minimum preheating temperature		
Normal strength steels	A, B, D, E	Below -5 °C	20 °C [1)]		
Higher strength steels (TMCP type)	AH32 – EH32 AH36 – EH36	Below 0 °C			
Higher strength steels (Conventional type)		Below 0 °C			

(Note)
1) This level of preheat is to be applied unless the approved welding procedure specifies a higher level.

TABLE 7.1 – Alignment

Detail	Standard	Limit	Remarks
Alignment of butt welds 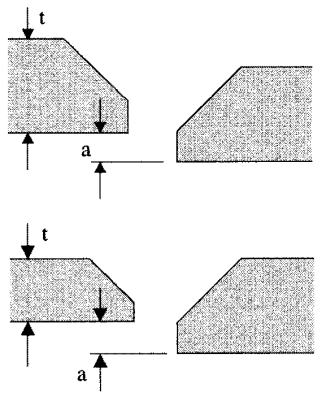		a ≤ 0.15t strength member a ≤ 0.2t other but maximum 4.0 mm	t is the lesser plate thickness
Alignment of fillet welds 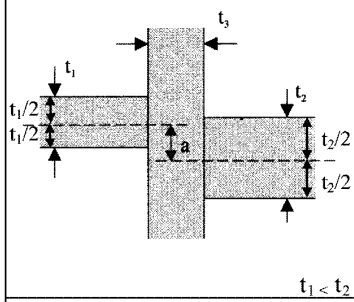 $t_1 < t_2$		Strength member and higher stress member: $a \le t_1/3$ Other: $a \le t_1/2$	Alternatively, heel line can be used to check the alignment. Where t_3 is less than t_1, then t_3 should be substituted for t_1 in the standard.
Alignment of fillet welds 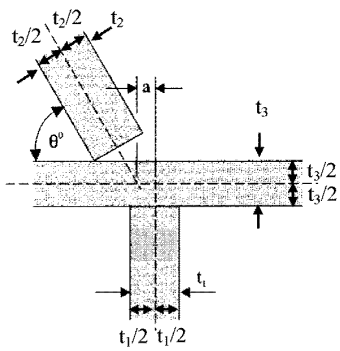		Strength member and higher stress member: $a \le t_1/3$ Other: $a \le t_1/2$	Alternatively, heel line can be used to check the alignment. Where t_3 is less than t_1, then t_3 should be substitute for t_1 in the standard.

TABLE 7.2 – Alignment

Detail	Standard	Limit	Remarks
Alignment of flange of T-longitudinal 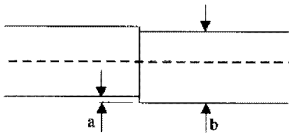 b (mm)	Strength member a ≤ 0.04b (mm)	a = 8.0 mm	
Alignment of height of T-bar, L-angle bar or bulb 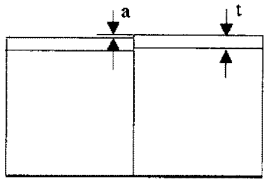 	Strength member a ≤ 0.15t Other a ≤ 0.20t	a = 3.0 mm	
Alignment of panel stiffener 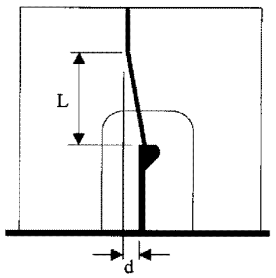 	d ≤ L/50		
Gap between bracket/intercostal and stiffener 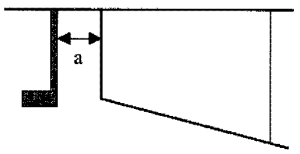 	a ≤ 2.0 mm	a = 3.0 mm	
Alignment of lap welds 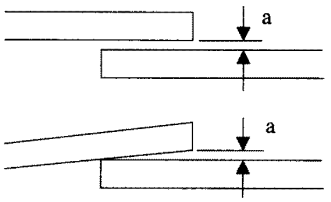 	a ≤ 2.0 mm	a = 3.0 mm	

TABLE 7.3 – Alignment

Detail	Standard	Limit	Remarks
Gap between beam and frame 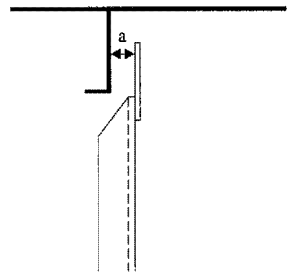	a ≤ 2.0 mm	a = 5.0 mm	
Gap around stiffener cut-out 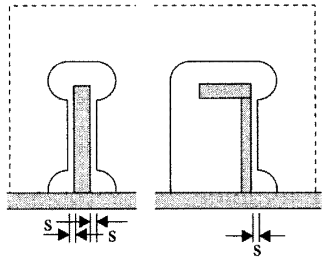	s ≤ 2.0 mm	s = 3.0 mm	

TABLE 8.1 – Typical Butt Weld Plate Edge Preparation (Manual Welding and Semi-Automatic Welding) for Reference

Detail	Standard	Limit	Remarks
Square butt $t \leq 5$ mm 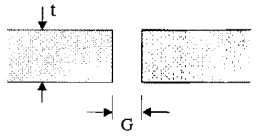	G ≤ 3 mm	G = 5 mm	see Note 1
Single bevel butt $t > 5$ mm 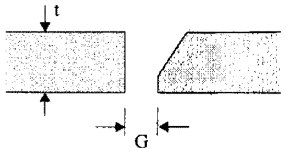	G ≤ 3 mm	G = 5 mm	see Note 1
Double bevel butt $t > 19$ mm 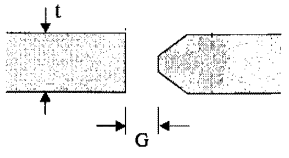	G ≤ 3 mm	G = 5 mm	see Note 1
Double vee butt, uniform bevels 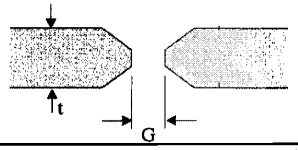	G ≤ 3 mm	G = 5 mm	see Note 1
Double vee butt, non-uniform bevel 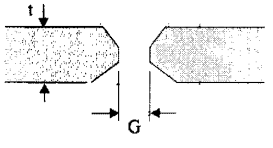	G ≤ 3 mm	G = 5 mm	see Note 1

NOTE 1

Different plate edge preparation may be accepted or approved by the Classification Society in accordance with URW28 or other recognized standard accepted by the Classification Society.
For welding procedures other than manual welding, see paragraph 3.2 Qualification of weld procedures.

TABLE 8.2 – Typical Butt Weld Plate Edge Preparation (Manual Welding and Semi-Automatic Welding) for Reference

Detail	Standard	Limit	Remarks
Single Vee butt, one side welding with backing strip (temporary or permanent) 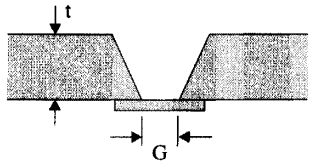	G = 3 to 9 mm	G = 16 mm	see Note 1
Single vee butt 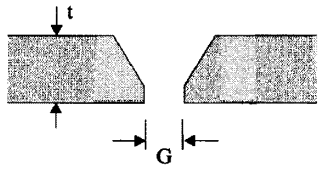	G ≤ 3 mm	G = 5 mm	see Note 1

NOTE 1

Different plate edge preparation may be accepted or approved by the Classification Society in accordance with URW28 or other recognized standard accepted by the Classification Society.
For welding procedures other than manual welding, see paragraph 3.2 Qualification of welding procedures.

Table 8.3 – Typical Fillet Weld Plate Edge Preparation (Manual Welding and Semi-Automatic Welding) for Reference

Detail	Standard	Limit	Remarks
Tee Fillet 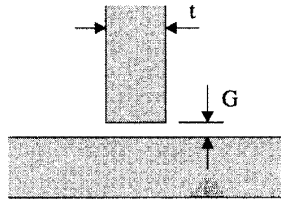	G ≤ 2 mm	G = 3 mm	see Note 1
Inclined fillet 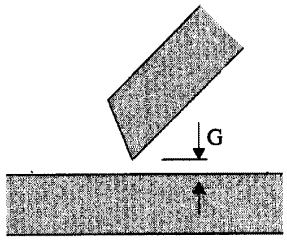	G ≤ 2 mm	G = 3 mm	see Note 1
Single bevel tee with permanent backing 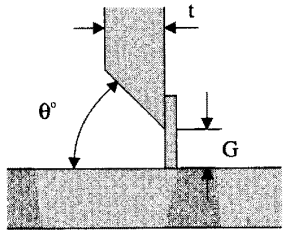	G ≤ 4 to 6 mm θ° = 30° to 45°	G = 16 mm	Not normally for strength member also see Note 1
Single bevel tee 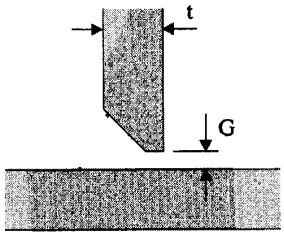	G ≤ 3 mm		see Note 1

NOTE 1

Different plate edge preparation may be accepted or approved by the Classification Society in accordance with URW28 or other recognized standard accepted by the Classification Society.
For welding procedures other than manual welding, see paragraph 3.2 Qualification of welding procedures.

Table 8.4 – Typical Fillet Weld Plate Edge Preparation (Manual Welding and Semi-Automatic Welding) for Reference

Detail	Standard	Limit	Remarks
Single 'J' bevel tee 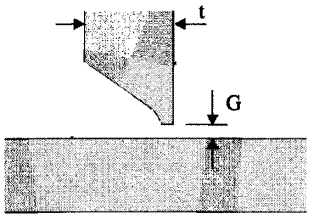	G = 2.5 to 4 mm		see Note 1
Double bevel tee symmetrical t > 19 mm 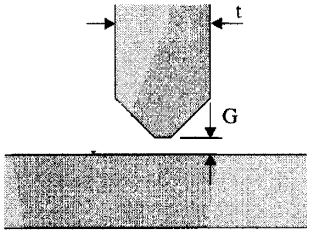	G ≤ 3 mm		see Note 1
Double bevel tee asymmetrical t > 19 mm 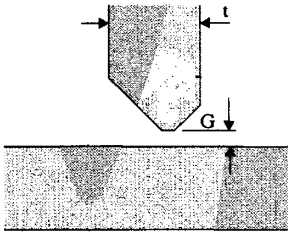	G ≤ 3 mm		see Note 1
Double 'J' bevel tee symmetrical 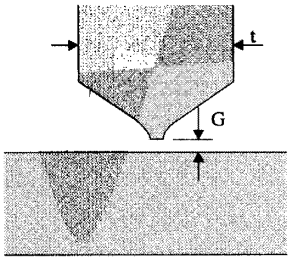	G = 2.5 to 4 mm		see Note 1

NOTE 1
Different plate edge preparation may be accepted or approved by the Classification Society in accordance with URW28 or other recognized standard accepted by the Classification Society.
For welding procedures other than manual welding, see paragraph 3.2 Qualification of welding procedures.

Table 8.5 – Butt And Fillet Weld Profile (Manual Welding and Semi-Automatic Welding)

Detail	Standard	Limit	Remarks
Butt weld toe angle 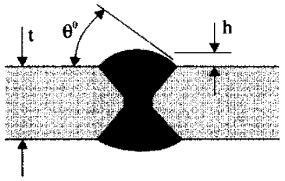	$\theta \leq 60°$ $h \leq 6$ mm	$\theta \leq 90°$	
Butt weld undercut 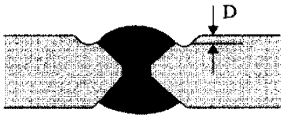		$D \leq 0.5$ mm for strength member $D \leq 0.8$ mm for other	
Fillet weld leg length 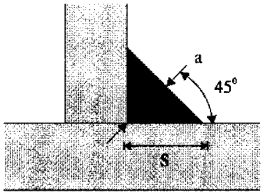 s = leg length; a = throat thickness		$s \geq 0.9s_d$ $a \geq 0.9a_d$ over short weld lengths	s_d = design s a_d = design a
Fillet weld toe angle 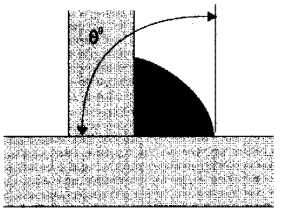		$\theta \leq 90°$	In areas of stress concentration and fatigue, the Classification Society may require a lesser angle.
Fillet weld undercut 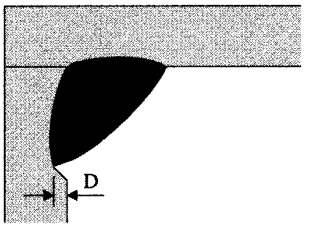		$D \leq 0.8$ mm	

Table 8.6 – Typical Butt Weld Plate Edge Preparation (Automatic welding) for Reference

Detail	Standard	Limit	Remarks
Submerged Arc Welding (SAW) 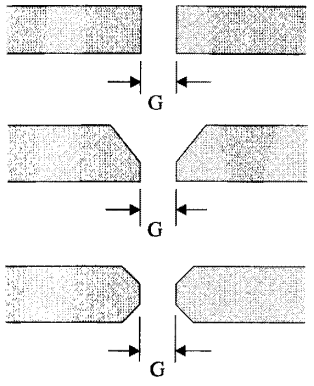 	$0 \leq G \leq 0.8$ mm	G = 2 mm	See Note 1.

NOTE 1

Different plate edge preparation may be accepted or approved by the Classification Society in accordance with URW28 or other recognized standard accepted by the Classification Society.
For welding procedures other than manual welding, see paragraph 3.2 Qualification of welding procedures.

Table 8.7 – Distance Between Welds

Detail	Standard	Limit	Remarks
Scallops over weld seams 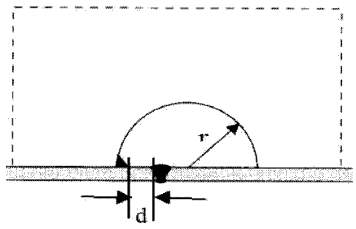		for strength member d ≥ 5mm for other d ≥ 0mm	The "d" is to be measured from the toe of the fillet weld to the toe of the butt weld.
Distance between two butt welds 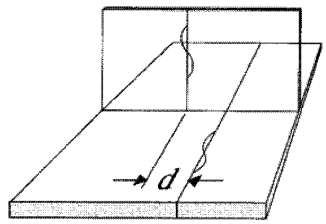		d ≥ 0 mm	
Distance between butt weld and fillet weld 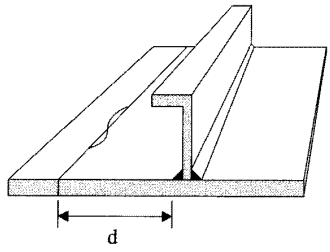		for strength member d ≥ 10 mm for other d ≥ 0 mm	The "d" is to be measured from the toe of the fillet weld to the toe of the butt weld.
Distance between butt welds 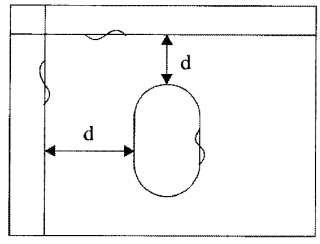	for cut-outs d ≥ 30 mm		
	for margin plates d ≥ 300 mm	150 mm	

Table 9.1 – Typical Misalignment Remedial

Detail	Remedial Standard	Remarks
Alignment of butt joints 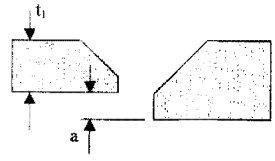	Strength member $a > 0.15t_1$ or $a > 4$ mm release and adjust Other $a > 0.2t_1$ or $a > 4$ mm release and adjust	t_1 is lesser plate thickness
Alignment of fillet welds 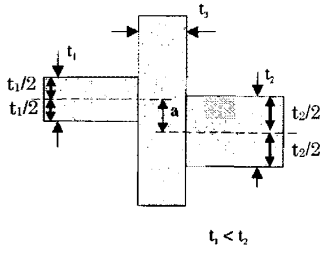	Strength member and higher stress member $t_1/3 < a \leq t_1/2$ - generally increase weld throat by 10% $a > t_1/2$ - release and adjust over a minimum of 50a Other $a > t_1/2$ - release and adjust over a minimum of 30a	Alternatively, heel line can be used to check the alignment. Where t_3 is less than t_1 then t_3 should be substituted for t_1 in standard
Alignment of flange of T-longitudinal 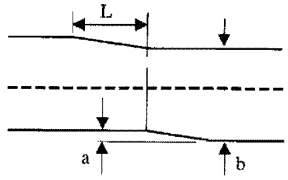	When $0.04b < a \leq 0.08b$, max 8 mm: grind corners to smooth taper over a minimum distance L = 3a When $a > 0.08b$ or 8 mm: release and adjust over a minimum distance L = 50a	
Alignment of height of T-bar, L-angle bar or bulb 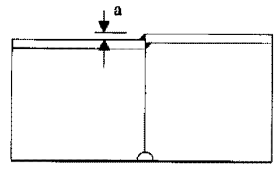	When 3 mm < a ≤ 6 mm: build up by welding When a > 6 mm: release and adjust over minimum L = 50a for strength member and L = 30a for other 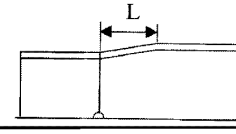	
Alignment of lap welds 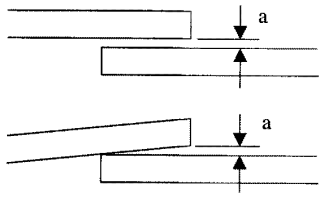	3 mm < a ≤ 5 mm: weld leg length to be increased by the same amount as increase in gap in excess of 3 mm a > 5 mm: members to be re-aligned	

Table 9.2 – Typical Misalignment Remedial

Detail	Remedial Standard	Remarks
Gap between bracket/intercostal and stiffener 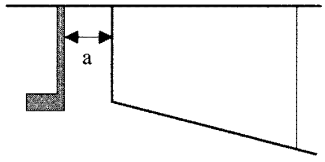	When 3 mm < a ≤ 5 mm: weld leg length to be increased by increase in gap in excess of 3 mm	
	When 5mm < a ≤ 10 mm: chamfer 30° to 40° and build up by welding with backing	
	When a > 10 mm: increase gap to about 50 mm and fit collar plate 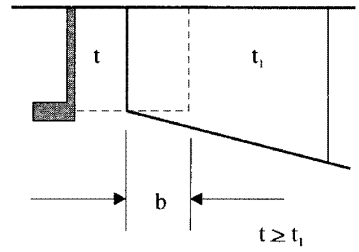 b = (2t + 25) mm, min. 50 mm	
Gap between beam and frame 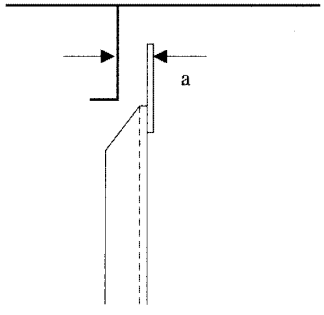	3 mm < a ≤ 5 mm: weld leg length to be increased by the same amount as increase in gap in excess of 3 mm a > 5 mm release and adjust	

TABLE 9.3 – Misalignment Remedial

Detail	Remedial standard	Remarks
Position of scallop 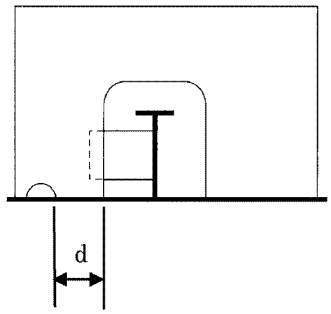	When d < 75 mm web plate to be cut between scallop and slot, and collar plate to be fitted 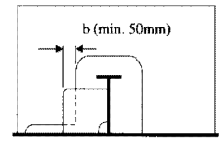 Or fit small collar over scallop 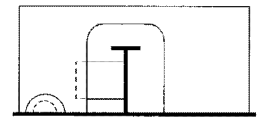 Or fit collar plate over scallop 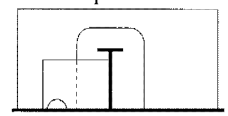	
Gap around stiffener cut-out 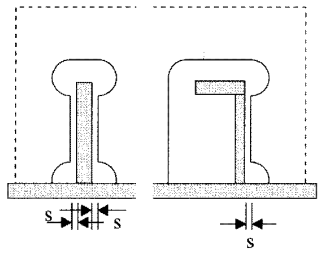	When 3 mm < s ≤ 5 mm weld leg length to be increased by the same amount as increase in gap in excess of 2 mm	
	When 5 mm < s ≤ 10 mm nib to be chamfered and built up by welding	
	When s > 10 mm cut off nib and fit collar plate of same height as nib 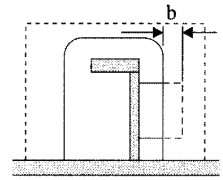 20 mm ≤ b ≤ 50 mm	

TABLE 9.4 – Typical Butt Weld Plate Edge Preparation Remedial (Manual Welding and Semi-Automatic Welding)

Detail	Remedial standard	Remarks
Square butt 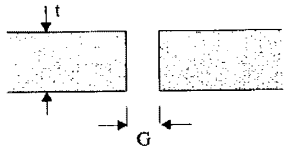	When G ≤ 10 mm chamfer to 45° and build up by welding When G > 10mm build up with backing strip; remove, back gouge and seal weld; or, insert plate, min. width 300 mm	
Single bevel butt 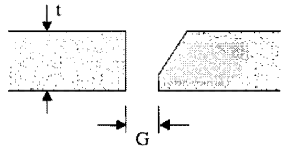	When 5 mm < G ≤ 1.5t (maximum 25 mm) build up gap with welding on one or both edges to maximum of 0.5t, using backing strip, if necessary. Where a backing strip is used, the backing strip is to be removed, the weld back gouged, and a sealing weld made. 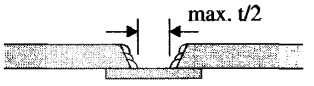	
Double bevel butt 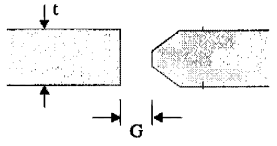	Different welding arrangement by using backing material approved by the Classification Society may be accepted on the basis of an appropriate welding procedure specification. When G > 25 mm or 1.5t, whichever is smaller, use insert plate, of minimum width 300 mm 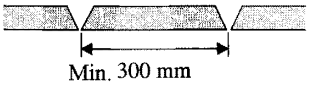	
Double vee butt, uniform bevels 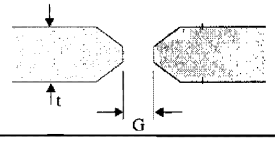		
Double vee butt, non-uniform bevel 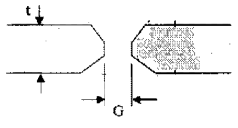		

TABLE 9.5 – Typical Butt Weld Plate Edge Preparation Remedial (Manual Welding and Semi-Automatic Welding)

Detail	Remedial Standard	Remarks
Single vee butt, one side welding 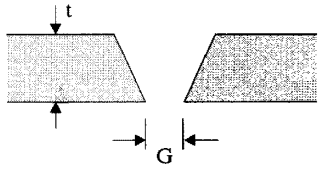 	When 5 mm < G ≤ 1.5t mm (maximum 25 mm), build up gap with welding on one or both edges, to "Limit" gap size preferably to "Standard" gap size as described in Table 8.2. Where a backing strip is used, the backing strip is to be removed, the weld back gouged, and a sealing weld made. Different welding arrangement by using backing material approved by the Classification Society may be accepted on the basis of an appropriate welding procedure specification. Limits see Table 8.2 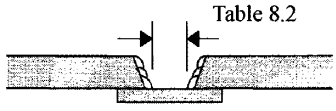 When G > 25 mm or 1.5t, whichever is smaller, use insert plate of minimum width 300 mm. 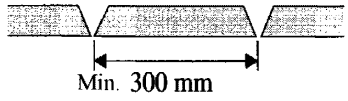 	
Single vee butt 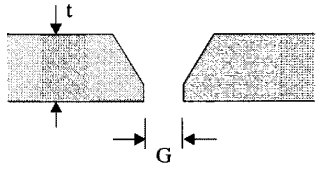 		

TABLE 9.6 – Typical Fillet Weld Plate Edge Preparation Remedial (Manual Welding and Semi-Automatic Welding)

Detail	Remedial standard	Remarks
Tee Fillet 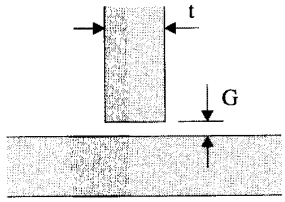	3 mm < G ≤ 5 mm – leg length increased to Rule leg + (G-2)	
	5 mm < G ≤ 16 mm or G ≤ 1.5t - chamfer by 30° to 45°, build up with welding, on one side, with backing strip if necessary, grind and weld. 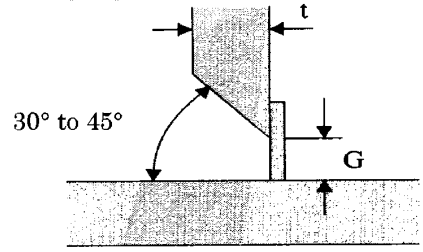	
	G > 16 mm or G > 1.5t use insert plate of minimum width 300 mm 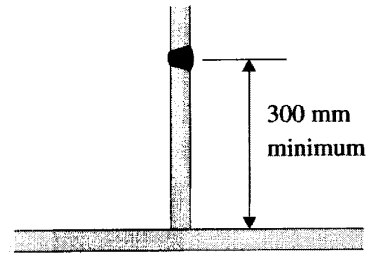	
Liner treatment 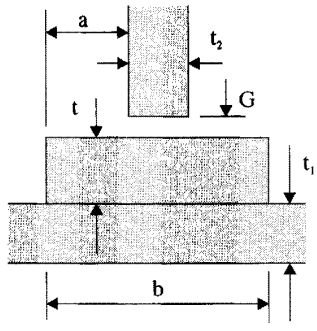	$t_2 \leq t \leq t_1$ G ≤ 2 mm a = 5 mm + fillet leg length	Not to be used in cargo area or areas of tensile stress through the thickness of the liner

TABLE 9.7 – Typical Fillet Weld Plate Edge Preparation Remedial (Manual Welding and Semi-Automatic Welding)

Detail	Remedial standard	Remarks
Single bevel tee 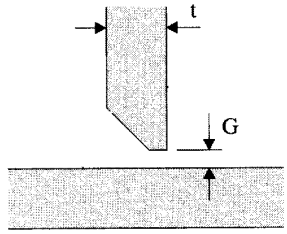	3 mm < G ≤ 5 mm build up weld	
	5 mm < G ≤ 16 mm - build up with welding, with backing strip if necessary, remove backing strip if used, back gouge and back weld. 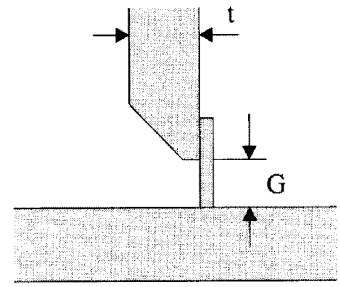	
	G > 16 mm new plate to be inserted of minimum width 300 mm 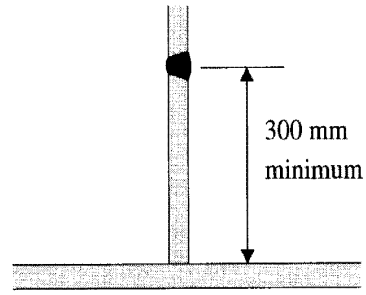	

TABLE 9.8 – Typical Fillet Weld Plate Edge Preparation Remedial (Manual Welding and Semi-Automatic Welding)

<table>
<tr><th>Detail</th><th>Remedial standard</th><th>Remarks</th></tr>
<tr><td>Single 'J' bevel tee
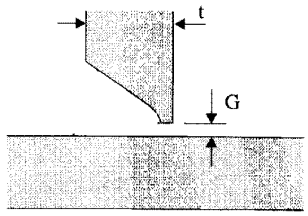
</td><td>as single bevel tee</td><td></td></tr>
<tr><td>Double bevel tee symmetrical
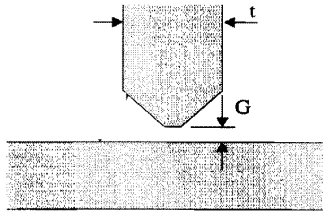
</td><td rowspan="3">When 5 mm < G ≤ 16 mm build up with welding using ceramic or other approved backing bar, remove, back gouge and back weld.
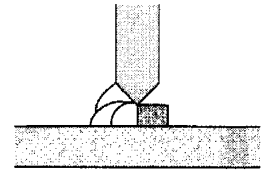
When G > 16 mm-insert plate of minimum height 300 mm to be fitted.
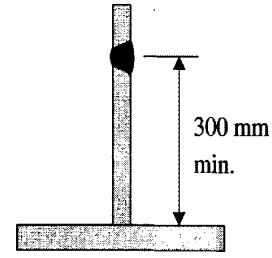
</td><td rowspan="3"></td></tr>
<tr><td>Double bevel tee asymmetrical
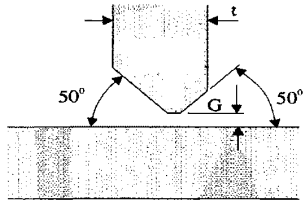
</td></tr>
<tr><td>Double 'J' bevel symmetrical
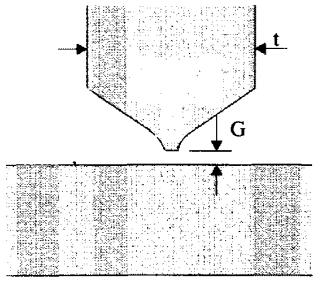
</td></tr>
</table>

TABLE 9.9 – Typical Fillet and Butt Weld Profile Remedial (Manual Welding and Semi-Automatic Welding)

Detail	Remedial standard	Remarks
Fillet weld leg length 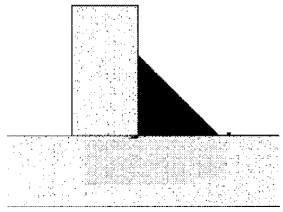	Increase leg or throat by welding over	Minimum short bead to be referred Table 9.14
Fillet weld toe angle 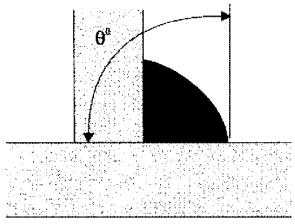	θ > 90° grinding, and welding, where necessary, to make θ ≤ 90°	
Butt weld toe angle 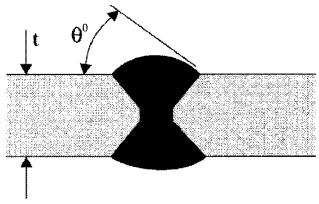	θ > 90° grinding, and welding, where necessary, to make θ ≤ 90°	
Butt weld undercut 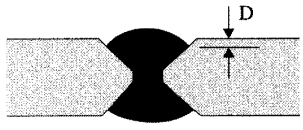	For strength member, where 0.5 < D ≤ 1 mm, and for other, where 0.8 < D ≤ 1 mm, undercut to be ground smooth (localized only) or to be filled by welding Where D > 1 mm undercut to be filled by welding	
Fillet weld undercut 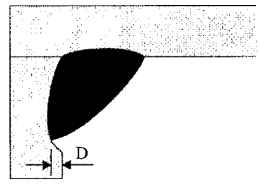	Where 0.8 < D ≤ 1 mm undercut to be ground smooth (localized only) or to be filled by welding Where D > 1 mm undercut to be filled by welding	

TABLE 9.10 – Distance Between Welds Remedial

Detail	Remedial standard	Remarks
Scallops over weld seams 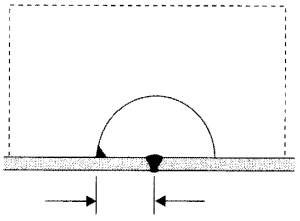	Hole to be cut and ground smooth to obtain distance	

TABLE 9.11 – Erroneous Hole Remedial

Detail	Remedial standard	Remarks
Holes made erroneously D < 200 mm 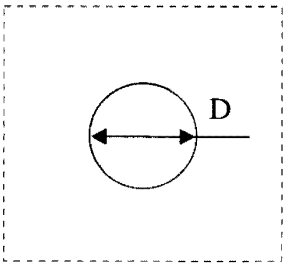	Strength member open hole to minimum 75 mm dia., fit and weld spigot piece 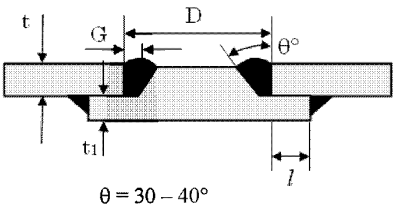 θ = 30 – 40° G = 4 – 6 mm 1/2t ≤ t1 ≤ t *l* = 50 mm Or open hole to over 300 mm and fit insert plate	Fillet weld to be made after butt weld The fitting of spigot pieces in areas of high stress concentration or fatigue is to be approved by the Classification Society.
	Other open hole to over 300 mm and fit insert plate Or fit lap plate 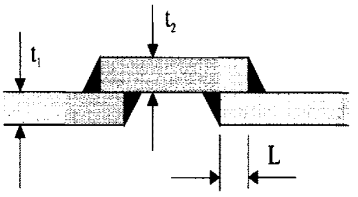 $t_1 = t_2$ L = 50 mm, min	
Holes made erroneously D ≥ 200 mm 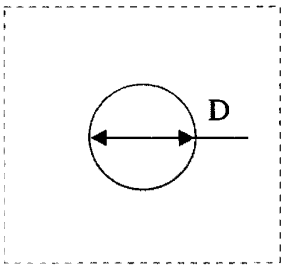	Strength member open hole and fit insert plate	
	Other open hole to over 300 mm and fit insert plate Or fit lap plate 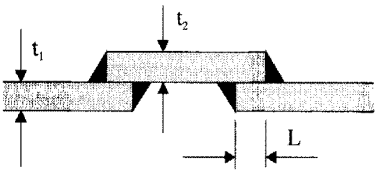 $t_1 = t_2$ L = 50 mm, min	

TABLE 9.12 – Remedial by Insert Plate

Detail	Remedial standard	Remarks
Remedial by insert plate 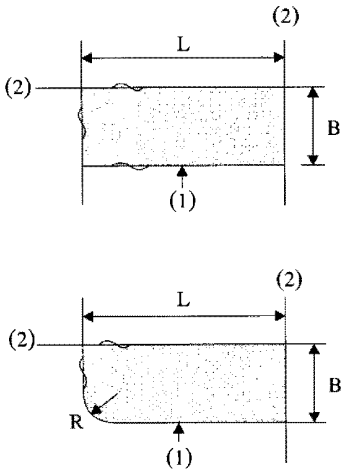	L = 300 mm minimum B = 300 mm minimum R = 5t mm 100mm minimum (1) seam with insert piece is to be welded first (2) original seam is to be released and welded over for a minimum of 100 mm.	
Remedial of built section by insert plate 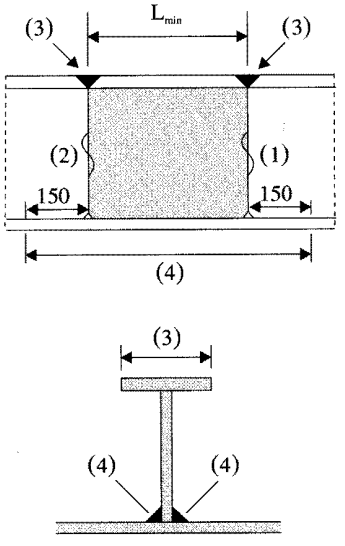	$L_{min} \geq 300$ mm Welding sequence (1) →(2) →(3) →(4) Web butt weld scallop to be filled during final pass (4)	

TABLE 9.13 – Weld Surface Remedial

Detail	Remedial standard	Remarks
Weld spatter 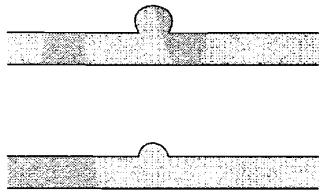	1. Remove spatter observed before blasting with scraper or chipping hammer, etc. 2. For spatter observed after blasting: a) Remove with a chipping hammer, scraper, etc. b) For spatter not easily removed with a chipping hammer, scraper, etc., grind the sharp angle of spatter to make it obtuse.	In principle, no grinding is applied to weld surface.
Arc strike (HT steel, Cast steel, Grade E of mild steel, TMCP type HT steel, Low temp steel)	Remove the hardened zone by grinding or other measures such as overlapped weld bead etc.	Minimum short bead to be referred Table 9.14

TABLE 9.14 – Welding Remedial by Short Bead

Detail	Remedial standard	Remarks
Short bead for remedying scar (scratch)	a) HT steel, Cast steel, TMCP type HT steel (Ceq > 0.36%) and Low temp steel (Ceq > 0.36%) Length of short bead ≥ 50 mm b) Grade E of mild steel Length of short bead ≥ 30 mm c) TMCP type HT steel (Ceq ≤ 0.36%) and Low temp steel (Ceq ≤ 0.36%) Length of short bead ≥ 10 mm	Preheating is necessary at 100 ± 25°C
Remedying weld bead	a) HT steel, Cast steel, TMCP type HT steel (Ceq > 0.36%) and Low temp steel (Ceq > 0.36%) Length of short bead ≥ 50 mm b) Grade E of mild steel Length of short bead ≥ 30 mm c) TMCP type HT steel (Ceq ≤ 0.36%) and Low temp steel (Ceq ≤ 0.36%) Length of short bead ≥ 30 mm	

NOTE:

1. When short bead is made erroneously, remove the bead by grinding.
2. $Ceq = C + \frac{Mn}{6} + \frac{Cr + Mo + V}{5} + \frac{Ni + Cu}{15} (\%)$

No. 47 Part B

Repair Quality Standard for Existing Ships

No. 47 (cont)

Part B - Shipbuilding and Repair Quality Standard for Existing Ships

CONTENTS:

1. Scope

2. General requirements to repairs and repairers

3. Qualification of personnel

3.1 Qualification of welders
3.2 Qualification of welding procedures
3.3 Qualification of NDE operators

4. Materials

4.1 General requirements to materials
4.2 Equivalency of material grades

5. General requirements to welding

5.1 Correlation of welding consumables to hull structural steels
5.2 General requirements to preheating and drying out
5.3 Dry welding on hull plating below the waterline of vessels afloat

6. Repair quality standard

6.1 Welding, general
6.2 Renewal of plates
6.3 Doubler on plates
6.4 Renewal of internals/stiffeners
6.5 Renewal of internals/stiffeners - transitions inverted angles/bulb profiles
6.6 Application of Doubling Straps
6.7 Welding of pitting corrosion
6.8 Welding repairs of cracks

REFERENCES

1. IACS "Bulk Carriers - Guidelines for Surveys, Assessment and Repair of Hull Structure"
2. TSCF "Guidelines for the inspection and maintenance of double hull tanker structures"
3. TSCF "Guidance manual for the inspection and condition assessment of tanker structures"
4. IACS UR W 11 "Normal and higher strength hull structural steels"
5. IACS UR W 13 "Thickness tolerances of steel plates and wide flats"
6. IACS UR W 17 "Approval of consumables for welding normal and higher strength hull structural steels"
7. IACS Z 10.1 "Hull surveys of oil tankers" and Z 10.2 "Hull surveys of bulk carriers" Table IV
8. IACS UR Z 13 "Voyage repairs and maintenance"
9. IACS Recommendation 12 "Guidelines for surface finish of hot rolled steel plates and wide flats"
10. IACS Recommendation 20 "Non-destructive testing of ship hull steel welds"

No. 47 (cont)

1. Scope

1.1 This standard provides guidance on quality of repair of hull structures. The standard covers permanent repairs of existing ships.

Whereas the standard generally applies to

- conventional ship types,
- parts of hull covered by the rules of the Classification Society,
- hull structures constructed from normal and higher strength hull structural steel, the applicability of the standard is in each case to be agreed upon by the Classification Society.

The standard does generally not apply to repair of

- special types of ships as e.g. gas tankers
- structures fabricated from stainless steel or other, special types or grades of steel

1.2 The standard covers typical repair methods and gives guidance on quality standard on the most important aspects of such repairs. Unless explicitly stated elsewhere in the standard, the level of workmanship reflected herein will in principle be acceptable for primary and secondary structure of conventional design. A more stringent standard may however be required for critical and highly stressed areas of the hull, and is to be agreed with the Classification Society in each case. In assessing the criticality of hull structure and structural components, reference is made to ref. 1, 2 and 3.

1.3 Restoration of structure to the original standard may not constitute durable repairs of damages originating from insufficient strength or inadequate detail design. In such cases strengthening or improvements beyond the original design may be required. Such improvements are not covered by this standard, however it is referred to ref. 1, 2 and 3.

No. 47 (cont)

2. General requirements for repairs and repairers

2.1 In general, when hull structure covered by classification is to be subjected to repairs, the work is to be carried out under the supervision of the Surveyor to the Classification Society. Such repairs are to be agreed prior to commencement of the work.

2.2 Repairs are to be carried out by workshops, repair yards or personnel who have demonstrated their capability to carry out hull repairs of adequate quality in accordance with the Classification Society's requirements and this standard.

2.3 Repairs are to be carried out under working conditions that facilitate sound repairs. Provisions are to be made for proper accessibility, staging, lighting and ventilation. Welding operations are to be carried out under shelter from rain, snow and wind.

2.4 Welding of hull structures is to be carried out by qualified welders, according to approved and qualified welding procedures and with welding consumables approved by the Classification Society, see Section 3. Welding operations are to be carried out under proper supervision of the repair yard.

2.5 Where repairs to hull which affect or may affect classification are intended to be carried out during a voyage, complete repair procedure including the extent and sequence of repair is to be submitted to and agreed upon by the Surveyor to the Classification Society reasonably in advance of the repairs. See Ref. 8.

No. 47 (cont)

3. Qualification of personnel

3.1 Qualification of welders

3.1.1 Welders are to be qualified in accordance with the procedures of the Classification Society or to a recognised national or international standard, e.g. EN 287, ISO 9606, ASME Section IX, ANSI/AWS D1.1. Recognition of other standards is subject to submission to the Classification Society for evaluation. Repair yards and workshops are to keep records of welders qualification and, when required, furnish valid approval test certificates.

3.1.2 Welding operators using fully mechanised of fully automatic processes need generally not pass approval testing, provided that production welds made by the operators are of the required quality. However, operators are to receive adequate training in setting or programming and operating the equipment. Records of training and production test results shall be maintained on individual operator's files and records, and be made available to the Classification Society for inspection when requested.

3.2 Qualification of welding procedures

Welding procedures are to be qualified in accordance with the procedures of the Classification Society or a recognised national or international standard, e.g. EN288, ISO 9956, ASME Section IX, ANSI/AWS D1.1. Recognition of other standards is subject to submission to the Classification Society for evaluation. The welding procedure should be supported by a welding procedure qualification record. The specification is to include the welding process, types of electrodes, weld shape, edge preparation, welding techniques and positions.

3.3 Qualification of NDE operators

3.3.1 Personnel performing non destructive examination for the purpose of assessing quality of welds in connection with repairs covered by this standard, are to be qualified in accordance with the Classification Society rules or to a recognised international or national qualification scheme. Records of operators and their current certificates are to be kept and made available to the Surveyor for inspection.

No. 47 (cont)

4. Materials

4.1 General requirements for materials

4.1.1 The requirements for materials used in repairs are in general the same as the requirements for materials specified in the Classification Society's rules for new constructions, (ref. 5).

4.1.2 Replacement material is in general to be of the same grade as the original approved material. Alternatively, material grades complying with recognised national or international standards may be accepted by the Classification Societies provided such standards give equivalence to the requirements of the original grade or are agreed by the Classification Society. For assessment of equivalency between steel grades, the general requirements and guidelines in Section 4.2 apply.

4.1.3 Higher tensile steel is not to be replaced by steel of a lesser strength unless specially approved by the Classification Society.

4.1.4 Normal and higher strength hull structural steels are to be manufactured at works approved by the Classification Society for the type and grade being supplied.

4.1.5 Materials used in repairs are to be certified by the Classification Society applying the procedures and requirements in the rules for new constructions. In special cases, and normally limited to small quantities, materials may be accepted on the basis of alternative procedures for verification of the material's properties. Such procedures are subject to agreement by the Classification Society in each separate case.

4.2 Equivalency of material grades

4.2.1 Assessment of equivalency between material grades should at least include the following aspects;

- heat treatment/delivery condition
- chemical composition
- mechanical properties
- tolerances

4.2.2 When assessing the equivalence between grades of normal or higher strength hull structural steels up to and including grade E40 in thickness limited to 50 mm, the general requirements in Table 4.1 apply.

4.2.3 Guidance on selection of steel grades to certain recognised standards equivalent to hull structural steel grades specified in Classification Societies' rules is given in Table 4.2

No. 47 (cont)

Items to be considered	Requirements	Comments
Chemical composition	- C; equal or lower - P and S; equal or lower - Mn; approximately the same but not exceeding 1.6% - Fine grain elements; in same amount - Detoxidation practice	The sum of the elements, e.g. Cu, Ni, Cr and Mo should not exceed 0.8%
Mechanical properties	- Tensile strength; equal or higher Yield strength; equal or higher - Elongation; equal or higher - Impact energy; equal or higher at same or lower temperature, where applicable	Actual yield strength should not exceed Classification Society Rule minimum requirements by more than 80 N/mm^2
Condition of supply	Same or better	Heat treatment in increasing order; - as rolled (AR) - controlled rolled (CR) - normalised (N) - thermo-mechanically rolled (TM)[1)] - quenched and tempered (QT)[1)] [1)] TM- and QT-steels are not suitable for hot forming
Tolerances	- Same or stricter	Permissable under thickness tolerances; - plates: 0.3 mm - sections: according to recognised standards

Table 4.1 Minimum extent and requirements to assessment of equivalency between normal or higher strength hull structual steel grades

No. 47 (cont)

Steel grades according to Classification Societies' rules (ref. 5)							Comparable steel grades			
Grade	Yield stress R_{eH} min. N/mm^2	Tensile strength R_m N/mm^2	Elongation A_5 min. %	Average impact energy Temp. °C	J, min. L	T	ISO 630-80 4950/2/3/ 1981	EN EN 10025-93 EN 10113-93	ASTM A 131	JIS G 3106
A	235	400-502	22	+20	-	-	Fe 360B	S235JRG2	A	SM41B
B				0	27	20	Fe 360C	S235J0	B	SM41B
D				-20	27	20	Fe 360D	S235J2G3	D	(SM41C)
E				-40	27	20	-	S275NL/ML	E	-
A 27	265	400-530	22	0			Fe 430C	S275J0G3	-	-
D 27				-20	27	20	Fe 430D	S275N/M	-	-
E 27				-40			-	S275NL/ML	-	-
A 32	315	440-590	22	0			-	-	AH32	SM50B
D 32				-20	31	22	-	-	DH32	(SM50C)
E 32				-40			-	-	EH32	-
A 36	355	490-620	21	0			Fe 510C	S355N/M	AH36	SM53B
D 36				-20	34	24	Fe 510D	S355N/M	DH36	(SM53C)
E 36				-40			E355E	S355NL/ML	EH36	-
A 40	390	510-650	20	0			E390CC	S420N/M	AH40	(SM58)
D 40				-20	41	27	E390DD	S420N/M	DH40	-
E 40				-40			E390E	S420NL/ML	EH40	-

Note: In selecting comparitable steels from this table, attention should be given to the requirements of Table 4.1 and the dimension requirements of the product with respect to Classification Sociey rules.

Table 4.2 Guidance on steel grades comparable to the normal and high strength hull structural steel grades given in Classification Society rules

No. 47 (cont)

5. General requirements to welding

5.1 Correlation of welding consumables with hull structural steels

5.1.1 For the different hull structural steel grades welding consumables are to be selected in accordance with IACS UR W17 (see Ref.6).

5.2 General requirements to preheating and drying out

5.2.1 The need for preheating is to be determined based on the chemical composition of the materials, welding process and procedure and degree of joint restraint.

5.2.2 A minimum preheat of 50° C is to be applied when ambient temperature is below 0° C. Dryness of the welding zone is in all cases to be ensured.

5.2.3 Guidance on recommended minimum preheating temperature for higher strength steel is given in Table 5.1. For automatic welding processes utilising higher heat input e.g. submerged arc welding, the temperatures may be reduced by 50° C. For re-welding or repair of welds, the stipulated values are to be increased by 25° C.

Carbon equivalent [1]	Recommended minimum preheat temperature (° C)		
	$t_{comb} \leq 50$ mm [2]	50 mm < $t_{comb} \leq 70$ mm [2]	$t_{comb} > 70$ mm [2]
Ceq ≤ 0.39	- -	50	
Ceq ≤ 0.41	- -	75	
Ceq ≤ 0.43	-	50	100
Ceq ≤ 0.45	50	100	125
Ceq ≤ 0.47	100	125	150
Ceq ≤ 0.50	125	150	175

Table 5.1 Preheating temperature

5.3 Dry welding on hull plating below the waterline of vessels afloat

5.3.1 Welding on hull plating below the waterline of vessels afloat is acceptable only on normal and higher strength steels with specified yield strength not exceeding 355 MPa and only for local repairs. Welding involving other high strength steels or more extensive repairs against water backing is subject to special consideration and approval by the Classification Society of the welding procedure.

5.3.2 Low-hydrogen electrodes or welding processes are to be used when welding on hull plating against water backing. Coated low-hydrogen electrodes used for manual metal arc welding should be properly conditioned to ensure a minimum of moisture content.

5.3.3 In order to ensure dryness and to reduce the cooling rate, the structure is to be preheated by a torch or similar prior to welding, to a temperature of minimum 5° C or as specified in the welding procedure.

No. 47 (cont)

Notes:

1) $$Ceq = C + \frac{Mn}{6} + \frac{Cr + Mo + V}{5} + \frac{Ni + Cu}{15} (\%)$$

2) Combined thickness $t_{comb} = t_1+t_2+t_3+t_4$, see figure

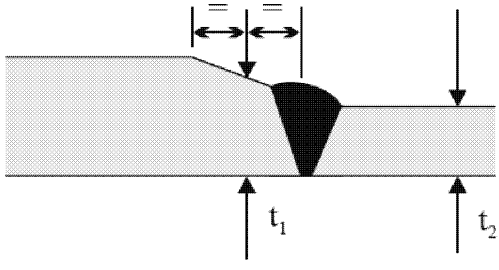

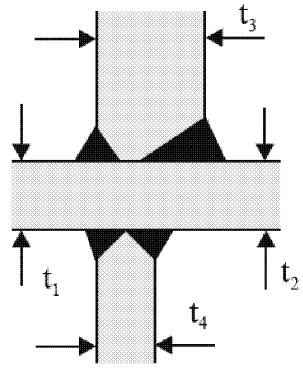

No. 47 (cont)

6. Repair quality standard

6.1 Welding, general

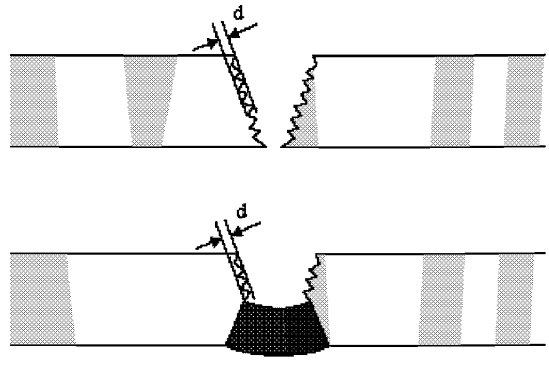

Fig 6.1 Groove roughness

Item	Standard	Limit	Remarks
Material Grade	Same as original or higher		See Section 4
Welding Consumables	IACS UR W17 (ref. 6)	Approval according to equivalent international standard	
Groove / Roughness	See note and Fig 6.1	d < 1.5 mm	Grind smooth
Pre-Heating	See Table 5.1	Steel temperature not lower than 5°C	
Welding with water on the outside	See Section 5.3	Acceptable for normal and high strength steels	- Moisture to be removed by a heating torch
Alignment	As for new construction		
Weld Finish	IACS Recommendation 20 (ref. 10)		
NDE	IACS Recommendation 20 (ref. 10)	At random with extent to be agreed with attending surveyors	

Note:

Slag, grease, loose mill scale, rust and paint, other than primer, to be removed.

No. 47 (cont)

6.2 Renewal of plates

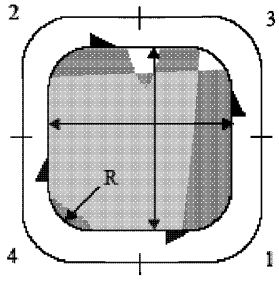

R = 5 x plate thickness
min. 100mm

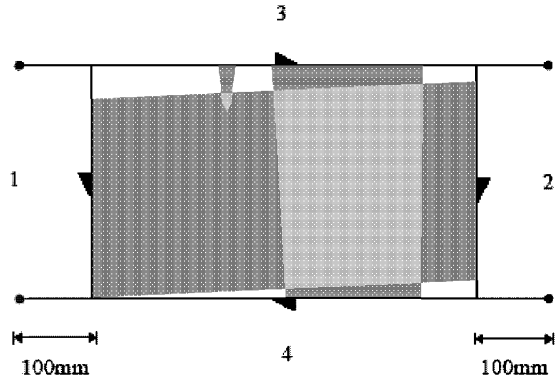

Fig 6.2 Welding sequence for inserts

Item	Standard	Limit	Remarks
Size Insert	Min. 300 x 300 mm R = 5 x thickness Circular inserts: D_{min} = 200 mm	Min. 200 x 200 mm Min R = 100 mm	
Marterial Grade	Same as original or higher		See Section 4.
Edge Preparation	As for new construction		In case of non compliance increase the amount of NDE
Welding Sequence	See Fig 6.2 Weld sequence is 1→2→3→4		For primary members sequence 1 and 2 transverse to the main stress direction
Alignment	As for new construction		
Weld Finish	IACS Recommendation 20 (ref. 10)		
NDE	IACS Recommendation 20 (ref. 10)		

No. 47 (cont)

6.3 Doublers on plating

Local doublers are normally only allowed as temporary repairs, except as original compensation for openings, within the main hull structure.

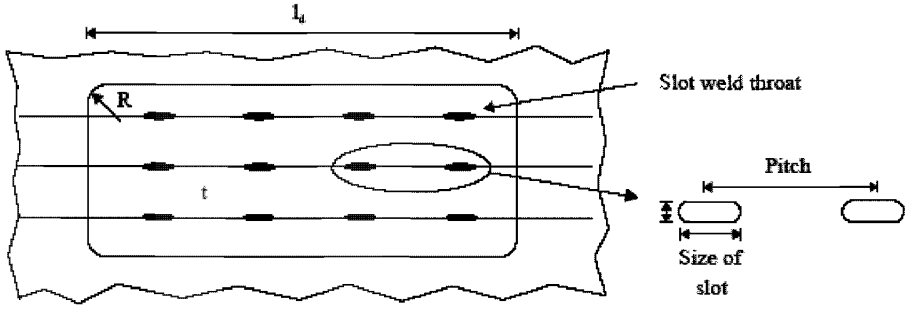

Fig 6.3 Doublers on plates

Item	Standard	Limit	Remarks
Existing Plating		General: t ≥ 5 mm	For areas where existing plating is less than 5 mm plating a permanent repair by insert is to be carried out.
Extent / Size	Rounded off corners.	min 300 x 300 mm R ≥ 50 mm	
Thickness of Doubler (td)	td ≤ tp (tp = original thickness of existing plating)	td > tp/3	
Material Grade	Same as original plate		See Section 4
Edge Preparation	As for [newbuidling] new construction		Doublers welded on primary strength members: (Le: leg length) when t > Le + 5 mm, the edge to be tapered (1:4)
Welding	As for [newbuidling] new construction		Welding sequence similar to insert plates.
Weld Size (throat thicknesss)	Circumferencial and in slots: 0.6 x td		
Slot Welding	Normal size of slot: (80-100) x 2 td Distance from doubler edge and between slots: d ≤ 15 td	Max pitch between slots 200 mm dmax = 500 mm	For doubler extended over several supporting elements, see Figure 6.3
NDE	IACS Recommendation 20 (ref. 10)		

No. 47 (cont)

6.4 Renewal of internals/stiffeners

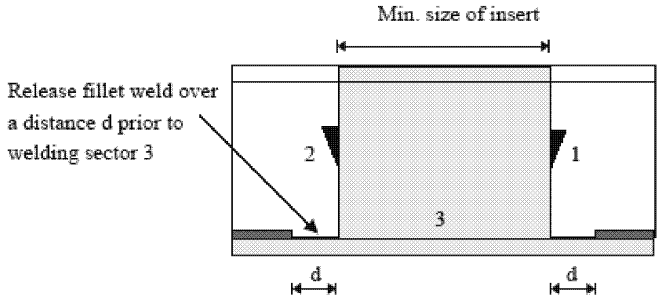

Fig 6.4 Welding sequence for inserts of stiffeners

Item	Standard	Limit	Remarks
Size Insert	Min. 300 mm	Min. 200 mm	
Marterial Grade	Same as original or higher		See Section 4.
Edge Preparation	As for new construction. Fillet weld stiffener web / plate to be released over min. d = 150 mm		
Welding Sequence	See Fig 6.4 Welding sequence is 1→2→3		
Alignment	As for new construction		
Weld Finish	IACS Recommendation 20 (ref. 10)		
NDE	IACS Recommendation 20 (ref. 10)		

No. 47 (cont)

6.5 Renewal of internals/stiffeners – transitions inverted angle/bulb profile

The application of the transition is allowed for secondary structural elements.

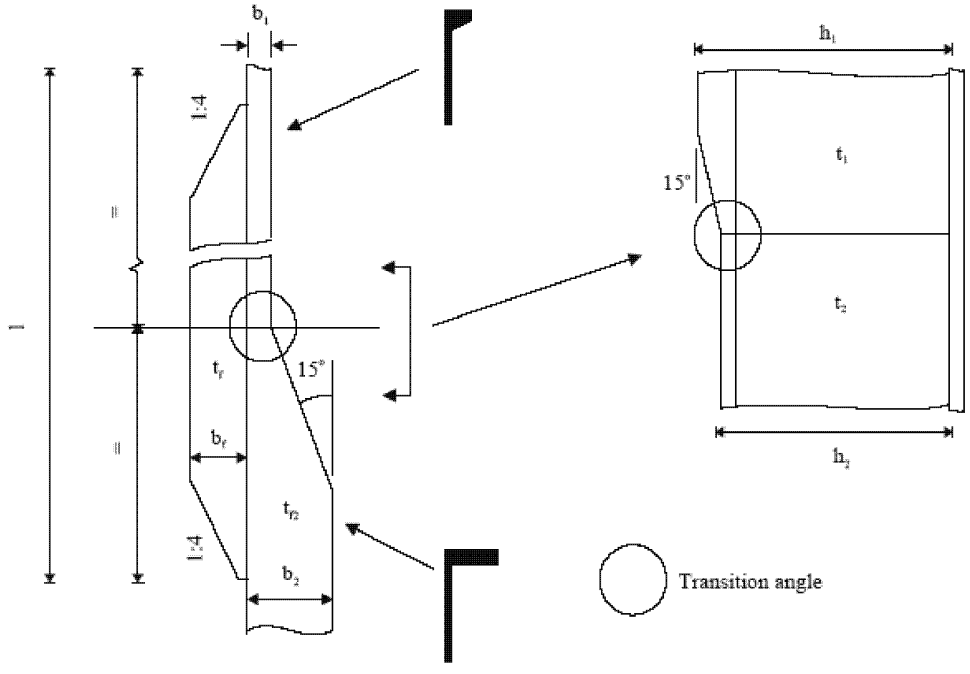

Fig 6.5 Transition between inverted angle and bulb profile

Item	Standard	Limit	Remarks
$(h_1 - h_2)$	≤ 025 x b1		
$\lvert t_1 - t_2 \rvert$	2 mm		Without tapering transition.
Transition Angle	15 degrees		At any arbitrary section
Flanges	$tf = tf_2$ $bf = bf_2$		
Length of Flatbar	4 x h_1		
Material			See Section 4.

No. 47 (cont)

6.6 Application of Doubling Straps

In certain instances, doubling straps are used as a means to strengthen and reinforce primary structure. Where this has been agreed and approved, particular attention should be paid to:

- the end termination points of the straps, so that toe support is such that no isolated hard point occurs.
- in the case of application of symmetrical or asymmetrical-ended straps, the corners at the end of the tapering should be properly rounded.
- any butts between lengths of doubling straps, so that there is adequate separation of the butt weld from the primary structure below during welding, and so that a high quality root run under controlled circumstances is completed prior to completing the remainder of the weld. Ultrasonic testing should be carried out on completion to verify full penetration.

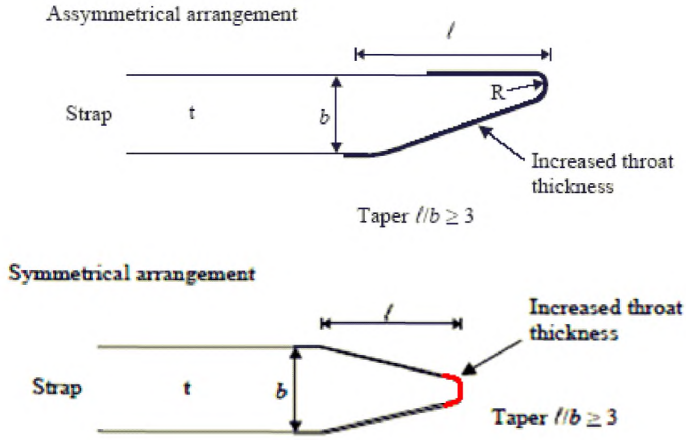

Fig 6.6 Application of Doubling Straps

Item	Standard	Limit	Remarks
Tapering	*l/b>3*		Special consideration to be drawn to design of strap terminations in fatigue sensitive areas.
Radius	0.1 x *b*	min 30 mm	
Material			See paragraph 2.0 General requirement to materials.
Weld Size			Depending on number and function of straps. Throat thickness to be increased 15 % toward ends.
Welding	Welding sequence from middle towards the free ends		See sketch. For welding of lengths > 1000 mm step welding to be applied.

No. 47 (cont)

6.7 Welding of pitting corrosion

Notes:

Shallow pits may be filled by applying coating or pit filler. Pits can be defined as shallow when their depth is less that 1/3 of the original plate thickness.

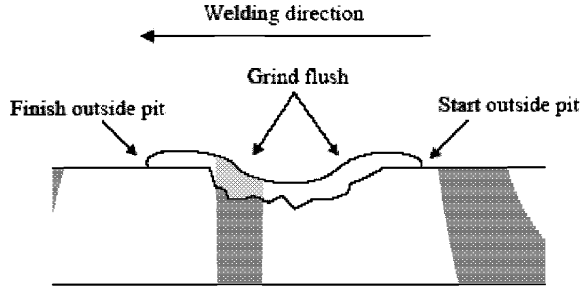

Fig 6.7 Welding of pits

Item	Standard	Limit	Remarks
Extent / Depth	Pits / grooves are to be welded flush with the original surface.	If deep pits or grooves are clustered together or remaining thickness is less than 6 mm, the plates should be renewed.	See also IACS Recommendation 12 (ref. 9)
Cleaning	Heavy rust to be removed		
Pre-Heating	See Table 5.1	Required when ambient temperature < 5°C	Always use propane torch or similar to remove any moisture
Welding Sequence	Reverse direction for each layer		See also IACS Recommendation 12 (ref. 9)
Weld Finish	IACS Recommendation 20 (ref. 10)		
NDE	IACS Recommendation 20 (ref. 10)	Min. 10% extent	Preferably MPI

Reference is made to TSCF Guidelines, Ref. 2 & 3.

No. 47 (cont)

6.8 Welding repairs for cracks

In the event that a crack is considered weldable, either as a temporary or permanent repair, the following techniques should be adopted as far as practicable. Run-on and run-off plates should be adopted at all free edges.

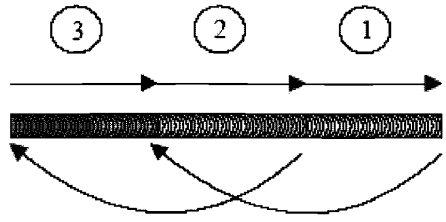

Fig 6.8.a Step back technique

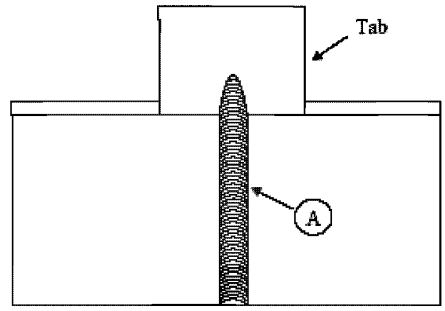

Fig 6.8.b End crack termination

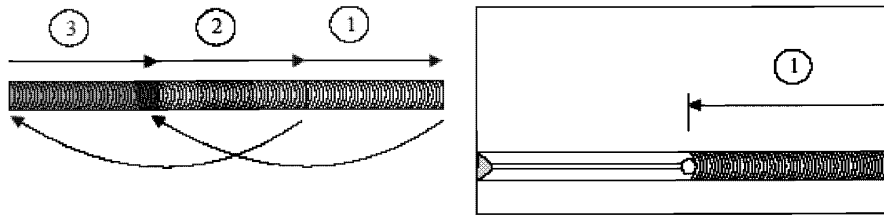

Fig 6.8.c Welding sequence for cracks with length less than 300 mm

No. 47 (cont)

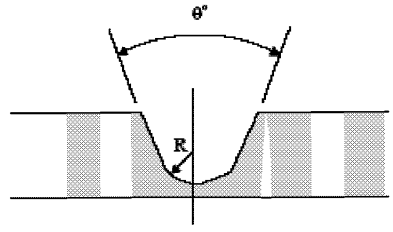

Fig 6.8.d Groove preparation (U-groove left and V-groove right)

Item	Standard	Limit	Remarks
Groove Preparation	θ = 45-60° r = 5 mm		For through plate cracks as for newbuilding. Also see Fig 6.8.d
Termination	Termination to have slope 1:3		For cracks ending on edges weld to be terminated on a tab see Fig 6.8.b
Extent	On plate max. 400 mm length. Vee out 50 mm past end of crack	On plate max 500 mm. Linear crack, not branched	
Welding Sequence	See Fig 6.8.c for sequence and direction	For cracks longer than 300 mm step-back technique should be used Fig 6.8.a	Always use low hydrogen welding consumables
Weld Finish	IACS Recommendation 20 (ref. 10)		
NDE	IACS Recommendation 20 (ref. 10)	100 % MP or PE of groove	100 % surface crack detection + UE or RE for butt joints

End of Part B,
End of Document

No.76 IACS Guidelines for Surveys, Assessment and Repair of Hull Structure – Bulk Carriers

(1994)
(Rev.1
July 2001)
(Rev.2
June 2004)
(Corr.1
Sept 2007)

IACS

INTERNATIONAL ASSOCIATION
OF CLASSIFICATION SOCIETIES



BULK CARRIERS

Guidelines for Surveys, Assessment and Repair of Hull Structure

Copyright
© IACS - the International Association of Classification Societies and the International Association of Classification Societies Limited.

All rights reserved.

Except as permitted under current English legislation no part of this work may be photocopied, stored in a retrieval system, published, performed in public, adapted, broadcast, transmitted, recorded or reproduced in any form or by means, without prior permission of the copyright owner.

Where IACS has granted written permission for any part of this publication to be quoted such quotation must include acknowledgement to IACS.

Enquiries should be addressed to the Permanent Secretary:

International Association of Classification Societies Ltd,
36 Broadway,
London, SW1H 0BH
Telephone: 020 7976 0660
Fax: 020 7808 1100
Email: gost.e-ecolog.ru

With regard to information published on this website and where the copyright resides with IACS and IACS Ltd., permission is hereby granted for use, as above.

Terms and Conditions
The International Association of Classification Societies (IACS), its Member Societies and IACS Ltd. and their directors, officers, members, employees and agents (on behalf of whom this notice is issued) shall be under no liability or responsibility in contract or negligence or otherwise howsoever to any person in respect of any information or advice expressly or impliedly given in this document, or in respect of any inaccuracy herein or omission herefrom or in respect of any act or omission which has caused or contributed to this document being issued with the information or advice it contains (if any).
Without derogating from the generality of the foregoing, neither the International Association of Classification Societies (IACS) nor IACS Ltd. nor its Member Societies nor their directors, officers, members, employees or agents shall be liable in contract or negligence or otherwise howsoever for any direct, indirect or consequential loss to any person caused by or arising from any information, advice, inaccuracy or omission given or contained herein or any act or omission causing or contributing to any such information, advice, inaccuracy or omission given or contained herein.

Any dispute concerning the provision of material herein is subject to the exclusive jurisdiction of the English courts and will be governed by English Law.

Contents

1 Introduction

2 Class survey requirements
2.1 General
2.2 Annual Surveys
2.3 Intermediate Surveys
2.4 Special Surveys
2.5 Bottom surveys
2.6 Damage and repair surveys

3 Technical background for surveys
3.1 General
3.2 Definitions
3.3 Structural damages and deterioration
3.4 Structural detail failures and repairs
3.5 IACS Early Warning Scheme (EWS) for reporting of significant damage

4 Survey planning, preparation and execution
4.1 General
4.2 Survey Programme
4.3 Principles for Planning Document
4.4 Conditions for survey
4.5 Access arrangement and safety
4.6 Personal equipment
4.7 Thickness measurement and fracture detection
4.8 Survey at sea or at anchorage
4.9 Documentation on board

5 Structural detail failures and repairs
5.1 General
5.2 Catalogue of structural detail failures and repairs

Part 1 Cargo hold region
- Area 1 Deck structure
- Area 2 Topside tank structure
- Area 3 Side structure
- Area 4 Transverse bulkheads including stool structure
- Area 5 Double bottom including hopper tank structure

Part 2 Fore and aft end regions
- Area 1 Fore end structure
- Area 2 Aft end structure
- Area 3 Stern frame, rudder arrangement and propeller shaft support

Part 3 Machinery and accommodation spaces
Area 1 Engine room structure
Area 2 Accommodation structure

1 Introduction

The International Association of Classification Societies (IACS) is introducing a series of manuals with the intention of giving guidelines to assist the surveyors of IACS Member Societies, and other interested parties involved in the survey, assessment and repair of hull structures for certain ship types.

This manual gives guidelines for a bulk carrier type ship which is constructed with a single deck, single skin, double bottom, hopper side tanks and topside tanks in cargo spaces, and is intended primarily to carry dry cargo, including ore, in bulk. **Figure 1** shows the general view of a typical single skin bulk carrier with 9 cargo holds.

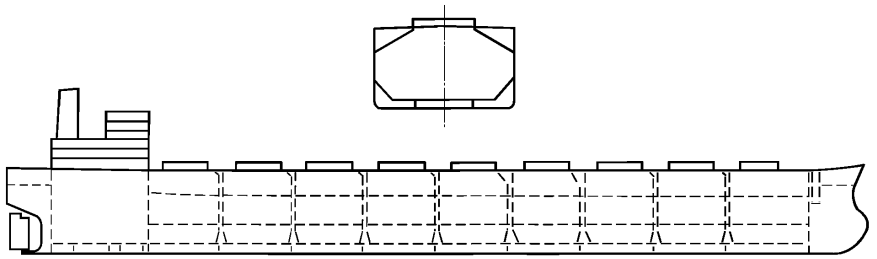

Figure 1 General view of a typical single skin bulk carrier

The guidelines focus on the IACS Member Societies' survey procedures but may also be useful in connection with inspection/examination schemes of other regulatory bodies, owners and operators.

The manual includes a review of survey preparation guidelines, which cover the safety aspects related to the performance of the survey, the necessary access facilities, and the preparation necessary before the surveys can be carried out.

The survey guidelines encompass the different main structural areas of the hull where damages have been recorded, focusing on the main features of the structural items of each area.

An important feature of the manual is the inclusion of the section which illustrates examples of structural deterioration and damages related to each structural area and gives what to look for, possible cause, and recommended repair methods, when considered appropriate.

The "IACS Early Warning Scheme (EWS)", with the emphasis on the proper reporting of significant hull damages by the respective Classification Societies, will enable the analysis of problems as they arise, including revisions of these Guidelines.

This manual has been developed using the best information currently available. It is intended only as guidance in support of the sound judgment of

surveyors, and is to be used at the surveyors' discretion. It is recognized that alternative and satisfactory methods are already applied by surveyors. Should there be any doubt with regard to interpretation or validity in connection with particular applications, clarification should be obtained from the Classification Society concerned.

Figure 2 shows a typical cargo hold structural arrangement in way of cargo hold region.

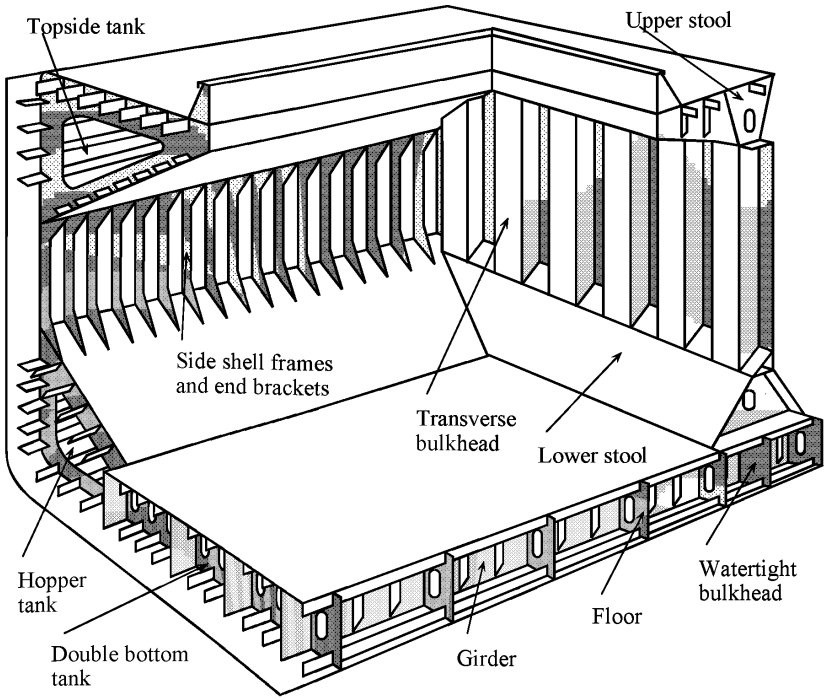

Figure 2 Typical cargo hold configuration for a single skin bulk carrier

2 Class survey requirements

2.1 General

2.1.1 The programme of periodical surveys is of prime importance as a means for assessment of the structural condition of the hull, in particular, the structure of cargo holds and adjacent tanks. The programme consists of Special (or Renewal) Surveys carried out at five-year interval with Annual and Intermediate Surveys carried out in between Special Surveys.

2.1.2 Since 1991, it has been a requirement for new bulk carriers to apply a protective coating to the structure in water ballast tanks which form part of the hull boundary, and, since 1993, to part of the side shell and transverse watertight bulkheads structures in way of the cargo holds.

2.1.3 The International Maritime Organization (IMO), in 1997 SOLAS Conference, adopted structural survivability standards for new and existing bulk carriers carrying the high density cargoes. All new single side skin bulk carriers, defined as ships built on or after 1st July 1999, are required to have sufficient strength to withstand the flooding of any one cargo hold taking dynamic effects into account. All existing single side skin bulk carriers, defined as ships built before 1 July 1999, must comply with the relevant IACS criteria for assessing the vertically corrugated transverse watertight bulkhead between the first two cargo holds and the double bottom in way of the first cargo hold with the first cargo hold assumed flooded. The relevant IMO adopted standards, IACS UR S19 and S22 for existing ships, and recommended standards, IACS UR S17, S18 and S20 for new ships, and the extent of possible repairs and/or reinforcements of vertically corrugated transverse watertight bulkheads on existing bulk carriers are freely available at IACS web site

gost.e-ecolog.ru

2.1.4 From 1 July 2001, bulk carriers of 20,000 DWT and above, to which the Enhanced Survey Programme (ESP) requirements apply, starting with the 3rd Special Survey, all Special and Intermediate hull classification surveys are to be carried out by at least two exclusive surveyors. Further, one exclusive surveyor is to be on board while thickness measurements are taken to the extent necessary to control the measurement process.

2.1.5 The detailed survey requirements complying with ESP are specified in the Rules and Regulations of each IACS Member Society.

2.1.6 The ESP is based on two principal criteria: the condition of the coating and the extent of structural corrosion. Of primary importance is when a coating has been found to be in a "poor" condition (more than 20% breakdown of the coating or the formation of hard scale in 10 % more of the area) or when a structure has been found to be *substantially* corroded (i.e. a wastage between 75 % and 100 % of the allowable diminution for the structural member in question.).

2.2 Annual Surveys

2.2.1 The purpose of an Annual Survey is to confirm that the general condition of the hull is maintained at a satisfactory level.

2.2.2 As the ship ages, cargo holds are required to be subjected to more extensive overall and close-up examinations at Annual Surveys.

2.2.3 In addition, overall and close-up examinations may be required for ballast tanks as a consequence of either the coating deteriorating to a *poor* condition or the structure being found to be *substantially* corroded at previous Intermediate or Special Surveys.

2.3 Intermediate Surveys

2.3.1 The Intermediate Survey replaces the second or third Annual Survey in each five year Special Survey cycle and requires that, in addition to the Annual Survey requirements, extended overall and close-up examinations including thickness measurements of cargo holds and ballast tanks used primarily for salt water ballast, are carried out.

2.3.2 The survey also includes re-examination and thickness measurements of any suspect areas which have substantially corroded or are known to be prone to rapid wastage.

2.3.3 Areas in ballast tanks and cargo holds found suspect at the previous Special Survey are subject to overall and close-up surveys, the extent of which becomes progressively more extensive commensurate with the age of the vessel.

2.3.4 As of 1 July 2001, for bulk carriers exceeding 15 years of age, the requirements of the Intermediate Survey are to be of the same extent as the previous Special Survey, except for pressure testing of cargo/ballast holds and ballast tanks which is not required unless deemed necessary by the attending surveyor.

2.4 Special Surveys

2.4.1 The Special (or Renewal) Surveys of the hull structure are carried out at five-year intervals for the purpose of establishing the condition of the structure to confirm that the structural integrity is satisfactory in accordance with the Classification Requirements, and will remain fit for its intended purpose for another five-year period, subject to proper maintenance and operation of the ship and to periodical surveys carried out at the due dates.

2.4.2 The Special Survey concentrates on close-up examination in association with thickness determination and is aimed at detecting fractures, buckling, *substantial* corrosion and other types of structural deterioration.

2.4.3 Thickness measurements are to be carried out upon agreement with the

Classification Society concerned in conjunction with the Special Survey. The Special Survey may be commenced at the 4th Annual Survey and be progressed with a view to completion by the 5th anniversary date.

2.4.4 Deteriorated protective coating in salt water ballast spaces and structural areas showing substantial corrosion and/or considered by the surveyor to be prone to rapid wastage will be recorded for particular attention during the following survey cycle, if not repaired at the survey.

2.5 Drydocking (Bottom) Surveys

2.5.1 A **Drydocking Survey** is required in conjunction with the **Special Survey** to examine the external underwater part of the ship and related items. Two Bottom surveys are required to be carried out during the five year period of validity of SOLAS Cargo Ship Safety Construction (SC) Certificate, and the maximum interval between any two successive Bottom Survey is not to exceed three years.

2.5.2 From 1 July 2002, for bulk carriers of 15 years of age and over, inspection of the outside of the ship's bottom is to be carried out with the ship in dry dock. For bulk carriers less than 15 years of age, alternative inspections of the ship's bottom not conducted in conjunction with the Special Survey may be carried out with the ship afloat. Inspection of the ship afloat is only to be carried out when the conditions are satisfactorily and the proper equipment and suitably qualified staff are available.

2.6 Damage and repair surveys

2.6.1 Damage surveys are occasional surveys which are, in general, outside the programme of periodical hull surveys and are requested as a result of hull damage or other defects. It is the responsibility of the owner or owner's representative to inform the Classification Society concerned when such damage or defect could impair the structural capability or watertight integrity of the hull. The damages should be inspected and assessed by the Society's surveyors and the relevant repairs, if needed, are to be performed. In certain cases, depending on the extent, type and location of the damage, permanent repairs may be deferred to coincide with the planned periodical survey.

Any damage in association with wastage over the allowable limits (including buckling, grooving, detachment or fracture), or extensive areas of wastage over the allowable limits, which affects or, in the opinion of the surveyor, will affect the vessel's structural watertight or weathertight integrity, is to be promptly and thoroughly repaired. Areas to be considered to are to include:
Side shell frames, their end attachments and adjacent shell plating, deck structure and deck plating, watertight bulkheads, and hatch covers and coamings.

2.6.2 In cases of repairs intended to be carried out by riding crew during voyage, the complete procedure of the repair, including all necessary surveys, is to be submitted to and agreed upon by the Classification Society reasonably in advance.

2.6.3 IACS Unified Requirement Z 13 "Voyage Repairs and Maintenance" provides useful guidance for repairs to be carried out by a riding crew during a voyage.

2.6.4 For locations of survey where adequate repair facilities are not available, consideration may be given to allow the vessel to proceed directly to a repair facility. This may require discharging the cargo and/or temporary repairs for the intended voyage. A suitable condition of class will be imposed when temporary measures are accepted.

3 Technical background for surveys

3.1 General

3.1.1 The purpose of carrying out the periodical hull surveys is to detect possible structural defects and damages and to establish the extent of any deterioration. To help achieve this and to identify key locations on the hull structure that might warrant special attention, knowledge of any historical problems of the particular ship or other ships of a similar class is to be considered if available. In addition to the periodical surveys, occasional surveys of damages and repairs are carried out. Records of typical occurrences and chosen solutions should be available in the ship's history file.

3.2 Definitions

3.2.1 For clarity of definition and reporting of survey data, it is recommended that standard nomenclature for structural elements be adopted. Typical sections in way of cargo holds are illustrated in **Figures 3 (a)** and **(b)**. These figures show the generally accepted nomenclature.

The terms used in these guidelines are defined as follows.

(a) Ballast Tank is a tank which is used primarily for salt water ballast.

(b) Spaces are separate compartments including holds and tanks.

(c) Overall examination is an examination intended to report on the overall condition of the hull structure and determine the extent of additional close-up examinations.

(d) Close-up examination is an examination where the details of structural components are within the close visual examination range of the surveyors, i.e. normally within reach of hand.

(e) Transverse Section includes all longitudinal members such as plating, longitudinals and girders at the deck, side, bottom and inner bottom, hopper side tanks and top wing tanks.

(f) Representative Spaces are those which are expected to reflect the condition of other spaces of similar type and service and with similar corrosion protection systems. When selecting representative spaces, account should be taken of the service and repair history on board.

(g) Suspect Areas are locations showing Substantial Corrosion and/or are considered by the surveyor to be prone to rapid material wastage.

(h) Substantial Corrosion is an extent of corrosion such that assessment of corrosion pattern indicates a material wastage in excess of 75 per cent of allowable margins, but within acceptable limits.

(i) Coating Condition is defined as follows:

Good – condition with only minor spot rusting.

Fair – condition with local breakdown at edges of stiffeners and weld connections and/or light rusting over 20 per cent or more of areas under consideration, but less than as defined for Poor condition.

Poor – condition with general breakdown of coating over 20 per cent or more of areas or hard scale at 10 per cent or more of

areas under consideration.

(j) Transition Region is a region where discontinuity in longitudinal structure occurs, e.g. at forward bulkhead of engine room and collision bulkhead.

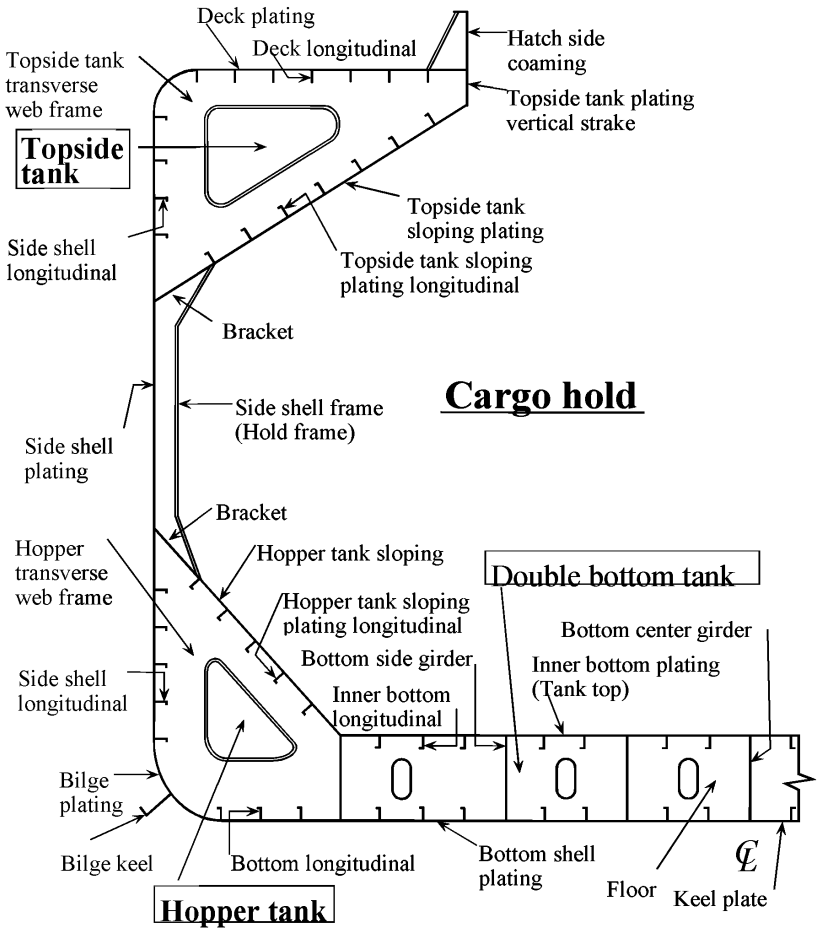

Figure 3 (a) Nomenclature for typical transverse section in way of cargo hold

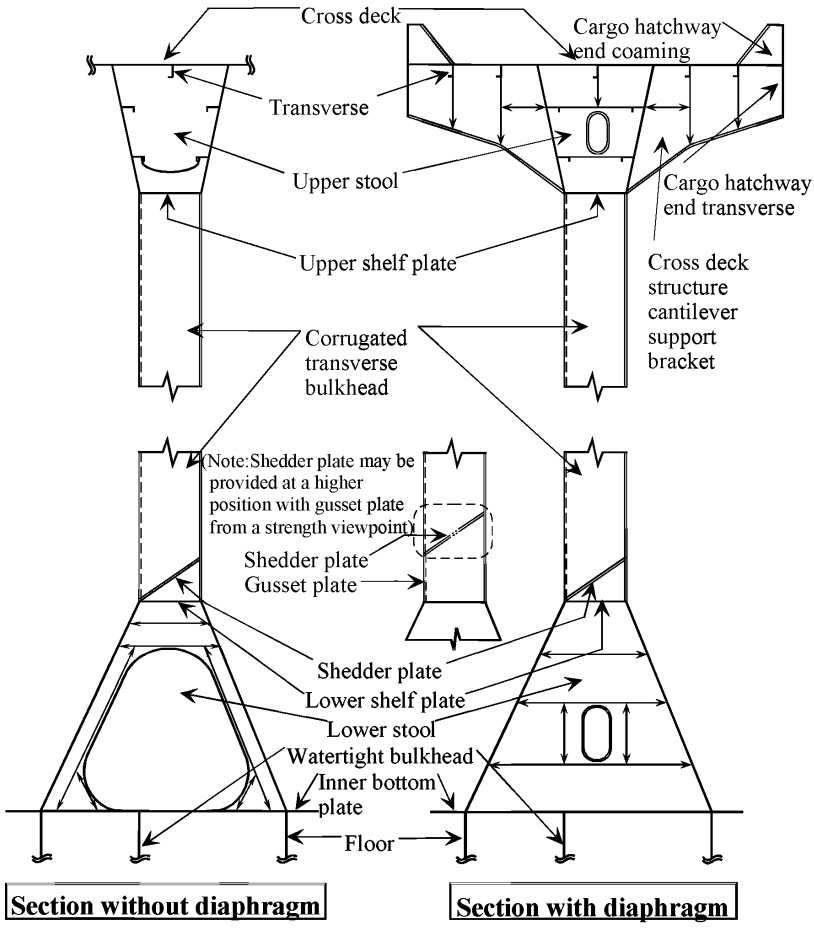

Figure 3 (b) Nomenclature for typical watertight bulkhead

3.3 Structural damages and deterioration

3.3.1 General

In the context of this manual, structural damages and deterioration imply deficiencies caused by:

- excessive corrosion
- design faults
- material defects or bad workmanship
- navigation in extreme weather conditions
- loading and unloading operations, water ballast exchange at sea
- wear and tear
- contact (with quay side, ice, touching underwater objects, etc.)

but not as a direct consequence of accidents such as collisions,

groundings and fire/explosions.
Deficiencies are normally recognized as:
- material wastage
- fractures
- deformations
The various types of deficiencies and where they may occur are discussed in more detail as follows:

3.3.2 Material wastage

In addition to being familiar with typical structural defects likely to be encountered during a survey, it is necessary to be aware of the various forms and possible location of corrosion that may occur to the structural members on decks, in holds, and in tanks.

General corrosion appears as a non-protective, friable rust which can occur uniformly on hold or tank internal surfaces that are uncoated. The rust scale continually breaks off, exposing fresh metal to corrosive attack. Thickness loss cannot usually be judged visually until excessive loss has occurred. Failure to remove mill scale during construction of the ship can accelerate corrosion experienced in service. Severe general corrosion in all types of ships, usually characterized by heavy scale accumulation, can lead to extensive steel renewals.

Grooving corrosion is often found in or beside welds, especially in the heat affected zone. The corrosion is caused by the galvanic current generated from the difference of the metallographic structure between the heat affected zone and base metal. Coating of the welds is generally less effective compared to other areas due to roughness of the surface which exacerbates the corrosion. Grooving corrosion may lead to stress concentrations and further accelerate the corrosion process. Grooving corrosion may be found in the base material where coating has been scratched or the metal itself has been mechanically damaged.

Pitting corrosion is often found in the bottom plating or in horizontal surfaces, such as face plates, in ballast tanks and is normally initiated due to local breakdown of coating. Once pitting corrosion starts, it is exacerbated by the galvanic current between the pit and other metal.

Erosion which is caused by the wearing effect of flowing liquid and abrasion which is caused by mechanical actions may also be responsible for material wastage.

3.3.3 Fractures

In most cases fractures are found at locations where stress concentration occurs. Weld defects, flaws, and where lifting fittings used during ship construction are not properly removed are often areas where fractures are found. If fractures occur under repeated stresses which are below the yielding stress, the fractures are called fatigue fractures. In addition to the cyclic stresses induced by wave forces, fatigue fractures can also result from vibration forces introduced by main engine(s) or propeller(s), especially in the afterward part of the

hull.

Fractures may not be readily visible due to lack of cleanliness, difficulty of access, poor lighting or compression of the fracture surfaces at the time of inspection. It is therefore important to identify, clean, and closely inspect potential problem areas. If the initiation points of a fracture is not apparent, the structure on the other side of the plating should be examined.

Fracture initiating at latent defects in welds more commonly appears at the beginning or end of a run of welds, or rounding corners at the end of a stiffener, or at an intersection. Special attention should be paid to welds at toes of brackets, at cut-outs, and at intersections of welds. Fractures may also be initiated by undercutting the weld in way of stress concentrations. Although now less common, intermittent welding may cause problems because of the introduction of stress concentrations at the ends of each length of weld.

It should be noted that fractures, particularly fatigue fractures due to repeated stresses, may lead to serious damages, e.g. a fatigue fracture in a frame may propagate into shell plating and affect the watertight integrity of the hull. In extreme weather conditions the shell fracture could extend further resulting in the loss of part of the shell plating and consequent flooding of cargo hold.

3.3.4 Deformations

Deformation of structure is caused by in-plane load, out-of-plane load or combined loads. Such deformation is often identified as local deformation, i.e. deformation of panel or stiffener, or global deformation, i.e. deformation of beam, frame, girder or floor, including associated plating.

If in the process of the deformation large deformation is caused due to small increase of the load, the process is called buckling.

Deformations are often caused by impact loads/contact and inadvertent overloading. Damages due to bottom slamming and wave impact forces are, in general, found in the forward part of the hull, although stern seas (pooping) have resulted in damages in way of the after part of the hull.

In the case of damages due to contact with other objects, special attention should be drawn to the fact that although damages to the shell plating may look small from the outboard side, in many cases the internal members are heavily damaged.

Permanent buckling may arise as a result of overloading, overall reduction in thickness due to corrosion, or contact damage. Elastic buckling will not normally be directly obvious but may be detected by evidence of coating damage, stress lines or shedding of scale. Buckling damages are often found in webs of web frames or floors. In many cases, this may be attributed to corrosion of webs/floors, wide stiffener spacing or wrongly positioned lightening holes, man-holes or slots in

webs/floors.

Finally, it should be noted that inadvertent overloading may cause significant damages. In general, however, major causes of damages are associated with excessive corrosion and contact damage.

3.4 Structural detail failures and repairs

3.4.1 For examples of structural defects which have occurred in service, attention is drawn to **Section 5** of these guidelines. It is suggested that surveyors and inspectors should be familiar with the contents of **Section 5** before undertaking a survey.

3.4.2 Any damage to or excessive wastage of the following structures that are considered affecting the ship's Classification is to be promptly and thoroughly repaired:

(a) Side shell frames, their end attachments and adjacent shell plating
(b) Deck structure and deck plating between hatches
(c) Watertight bulkheads
(d) Hatch covers and coamings

3.4.3 In general, where part of the structure has deteriorated to the permissible minimum thickness, then the affected area is to be cropped and renewed. Doubler plates must not be used for the compensation of wasted plate. Repair work in tanks requires careful planning in terms of accessibility.

3.4.4 If replacement of defective parts must be postponed, the following temporary measures may be acceptable at the surveyor's discretion:

(a) The affected area may be sandblasted and painted in order to reduce corrosion rate.
(b) Doubler may be applied over the affected area. Special consideration should be given to areas buckled under compression.
(c) Stronger members may support weakened stiffeners by applying temporarily connecting elements.
(d) Cement box may be applied over the affected area.

A suitable condition of class should be imposed when temporary measures are accepted.

3.5 IACS Early Warning Scheme (EWS) for reporting of significant hull damage

3.5.1 IACS has organised and set up a system to permit the collection, and dissemination amongst Member Societies of information (while excluding a ship's identity) on significant hull damages.

3.5.2 The principal purpose of the IACS Early Warning Scheme is to enable a Classification Society with experience of a specific damage to make this information available to the other societies so that action can be implemented to avoid repetition of damage to hulls where similar structural arrangements are employed.

3.5.3 These guidelines incorporated the experience gained from IACS EWS Scheme.

4 Survey planning, preparation and execution

4.1 General

4.1.1 The owner should be aware of the scope of the coming survey and instruct those who are responsible, such as the master or the superintendent, to prepare necessary arrangements. If there is any doubt, the Classification Society concerned should be consulted.

4.1.2 Survey execution will naturally be heavily influenced by the type of survey to be carried out. The scope of survey will have to be determined prior to the execution.

4.1.3 The surveyor should study the ship's structural arrangements and review the ship's operation and survey history and those of sister ships where possible, to identify any known potential problem areas particular to the type of ships. Sketches of typical structural elements should be prepared in advance so that any defects and/or ultrasonic thickness measurements can be recorded rapidly and accurately.

4.2 Survey Programme

4.2.1 It is mandatory that a specific Survey Programme be worked out in advance of the Special Survey by the owner in cooperation with the Classification Society.

4.2.2 The Survey Programme should account for and comply with the requirements for close-up examinations, thickness measurements and tank testing, and take into consideration the conditions for survey, access to structures and equipment for survey.

4.2.3 The close-up survey and thickness measurement in this Survey Programme may be augmented by a Planning Document as described in **4.3** and which should be agreed with the relevant Classification Society.

4.2.4 The Survey Programme should take into account the information included in the documentation on board, as described in **4.9**.

4.2.5 In developing the Survey Program, the Classification Society will advise the Owner of the maximum acceptable structural corrosion diminution levels applicable to the vessel.

4.3 Principle for Planning Document

4.3.1 A Planning Document is intended to identify critical structural areas and to stipulate the extent and locations for close-up survey and thickness measurements with respect to sections and internal structures as well as nominated suspect areas. Minimum requirements regarding close-up surveys and thickness measurements are stipulated in IACS Unified Requirement Z10.2.

4.3.2 The planning Document is to be worked out by the owner in cooperation

with the relevant Classification Society well in advance of the survey.

4.3.3 The basis for nomination of spaces and areas in **4.3.1** above is a technical assessment and consideration of possible deterioration where the following elements on the particular ship are taken into account:
(a) Design features such as extent of high tensile steel and local details;
(b) Former history available at owner's and the relevant Classification Society's offices with respect to material wastage, fractures, deformations and repairs for the particular ship as well as similar vessels.
(c) Information from same offices with respect to type of cargo, use of different spaces for cargo/ballast, protection of spaces and condition of coating, if any.

4.3.4 The Planning Document is to contain relevant information pertaining to at least the following information:
(a) Main particulars
(b) Main structural plans (scantling drawings), including information regarding use of high tensile steels
(c) Plan of tanks/holds
(d) List of tanks/holds with information on use, protection and condition of coating
(e) Conditions for survey (e.g. information regarding hold and tank cleaning, gas freeing, ventilation, lighting, etc)
(f) Provisions and methods for access
(g) Equipment for surveys
(h) Corrosion risk nomination of holds and tanks
(i) Design related damages on the particular ship, and similar vessels, where available.
(j) Selected holds and tanks and areas for close-up survey
(k) Selected sections for thickness measurements
(l) Acceptable corrosion allowance
(m) Damage experience related to the ship in question

4.4 Conditions for survey

4.4.1 The owner is to provide the necessary facilities for a safe execution of the survey.

4.4.2 Tanks and spaces are to be safe for access, i.e. gas freed (marine chemist certificate), ventilated, illuminated, etc.

4.4.3 Tanks and spaces are to be sufficiently clean and free from water, scale, dirt, oil residues, etc. and sufficient illumination is to be provided, to reveal corrosion, deformation, fractures, damages or other structural deterioration. In particular this applies to areas which are subject to thickness measurement.

4.5 Access arrangement and safety

4.5.1 In accordance with the intended survey, measures are to be provided to enable the hull structure to be examined and thickness measurement carried out in a safe and practical way.

4.5.2 For close-up surveys in a cargo hold and salt water ballast tanks, one or more of the following means for access, acceptable to the Surveyor, are to be provided:

a) permanent staging and passages through structures;
b) temporary staging, e.g. ladders and passages through structures;
c) lifts and movable platforms; and
d) other equivalent means.

4.5.3 In addition, particular attention should be given to the following guidance:

(a) Prior to entering tanks and other closed spaces, e.g. chain lockers, void spaces, it is necessary to ensure that the oxygen content is to be tested and confirmed as safe. A responsible member of the crew should remain at the entrance to the space and if possible communication links should be established with both the bridge and engine room. Adequate lighting should be provided in addition to a hand held torch (flashlight).

(b) In tanks where the structure has been coated and recently deballasted, a thin slippery film may often remain on the surfaces. Care should be taken when inspecting such spaces.

(c) The removal of scale may be extremely difficult. The removal of scale by hammering may cause sheet scale to fall, and in cargo holds this may result in residues of cargo falling from above. When using a chipping or scaling hammer care should be taken to protect eyes, and where possible safety glasses should be worn.
If the structure is heavily scaled then it may be necessary to request de-scaling before conducting a satisfactory visual examination.

(d) Owners or their representatives have been known to request that a survey be carried out from the top of the cargo during discharging operations. For safety reason, surveys must not ~~to~~ be carried out during discharging operations in the hold.

(e) In bulk carriers fitted with vertical ballast trunks connecting the topside and lower hopper tanks, the trunks and associated hull structure are normally surveyed in conjunction with the tanks. Space within the trucks is very limited and access is by ladder or individual rungs which can become heavily corroded and in some cases detached or missing. Care needs to be taken when descending these trunks.

(f) When entering a cargo hold or tank the bulkhead vertical ladders should be examined prior to descending to ensure that they are in good condition and rungs are not missing or loose. If holds are being entered when the hatch covers are in the closed position, then adequate lighting should be arranged in the holds. One person at a

time should descend or ascend the ladder.

(g) Sloping ("Australian Style") bulkhead ladders are prone to cargo handling damage and it is not uncommon to find platforms and ladders in poor condition with rails and stanchions missing or loose.

(h) If a portable ladder is used for survey purposes, the ladder should be in good condition and fitted with adjustable feet, to prevent it from slipping. Two crew members should be in attendance in order that the base of the ladder is adequately supported during use. The remains of cargo, in particular fine dust, on the tank top should be brushed away as this can increase the possibility of the ladder feet slipping.

(i) If an extending/articulated ladder (frame walk) is used to enable the examination of upper portions of cargo hold structure, the ladder should incorporate a hydraulic locking system and a built in safety harness. Regular maintenance and inspection of the ladder should be confirmed prior to its use.

(j) If a hydraulic arm vehicles ("Cherry Picker") is used to enable the examination of the upper parts of the cargo hold structure, the vehicle should be operated by qualified personnel and there should be evidence that the vehicle has been properly maintained. The standing platform should be fitted with a safety harness. For those vehicles equipped with a self leveling platform, care should be taken that the locking device is engaged after completion of maneuvering to ensure that the platform is fixed.

(k) Staging is the most common means of access provided especially where repairs or renewals are being carried out. It should always be correctly supported and fitted with handrails. Planks should be free from splits and lashed down. Staging erected hastily by inexperienced personnel should be avoided. In topside and lower hopper tanks it may be necessary to arrange staging to provide close-up examination of the upper parts of the tank particularly the transverse web frames, especially where protective coatings have broken down or have not been applied.

(l) In double bottom tanks there will often be a build up of mud on the bottom of the tank and this should be removed, in particular in way of tank boundaries, suction and sounding pipes, to enable a clear assessment of the structural condition.

4.6 Personal equipment

4.6.1 The following protective clothing and equipment to be worn as applicable during the surveys:

(a) Working clothes: Working clothes should be of a low flammability type and be easily visible.

(b) Head protection: Hard hat (metal hats are not allowed) shall always be worn outside office building/unit accommodations.

(c) Hand and arm protection: Various types of gloves are available for use, and these should be used during all types of surveys. Rubber/plastic gloves may be necessary when working in cargo holds.

(d) Foot protection: Safety shoes or boots with steel toe caps and non slip soles shall always be worn outside office buildings/unit accommodations. Special footwear may be necessary on slippery surfaces or in areas with chemical residues.
(e) Ear protection: Ear muffs or ear plugs are available and should be used when working in noisy areas. As a general rule, you need ear protection if you have to shout to make yourself understood by someone standing close to you.
(f) Eye protection: Goggles should always be used when there is danger of getting solid particles or dust into the eyes. Protection against welding arc flashes and ultraviolet light should also be considered.
(g) Breathing protection: Dust masks shall be used for protection against the breathing of harmful dusts, paint spraying and sand blasting. Gas masks and filters should be used by personnel working for short periods in an atmosphere polluted by gases or vapour.
(Self-contained breathing apparatus: Surveyors shall not enter spaces where such equipment is necessary due to unsafe atmosphere. Only those who are specially trained and familiar with such equipment should use it and only in case of emergency).
(h) Lifejacket: Recommended used when embarking/disembarking ships offshore, from/to pilot boat.

4.6.2 The following survey equipment is to be used as applicable during the surveys:
(a) Torches: Torches (Flashlights) approved by a competent authority for use in a flammable atmosphere shall be used in gas dangerous areas. High intensity beam type is recommended for in-tank inspections. Torches are recommended to be fitted with suitable straps so that both hands may be free.
(b) Hammer: In addition to its normal purposes the hammer is recommended for use during surveys inside units, tanks etc. as it may be most useful for the purpose of giving distress signal in case of emergency.
(c) Oxygen analyser/Multigas detector: For verification of acceptable atmosphere prior to tank entry, pocket size instruments which give audible alarm when unacceptable limits are reached are recommended. Such equipment shall have been approved by national authorities.
(d) Safety belts and lines: Safety belts and lines should be worn where high risk of falling down from more than 3 meters is present.
(e) Radiation meter: For the purpose of detection of ionizing radiation (X or gamma rays) caused by radiographic examination, radiation meter of the type which gives audible alarm upon detection of radiation is recommended.

4.7 Thickness measurement and fracture detection

4.7.1 Thickness measurement is to comply with the requirements of the Classification Society concerned. Thickness measurement should be

carried out at points that adequately represent the nature and extent of any corrosion or wastage of the respective structure (plate, web, etc.)

4.7.2 Thickness measurement is normally carried out by means of ultrasonic test equipment. The accuracy of the equipment is to be proven as required.

4.7.3 The required thickness measurements, if not carried out by the class society itself, are to be carried out by a qualified company certified by the relevant classification society, and are to be witnessed by a surveyor on board to the extent necessary to control the process. The report is to be verified by the surveyor in charge.

4.7.4 The thickness measurement company should be part of the survey planning meeting to be held prior to the survey.

4.7.5 One or more of the following fracture detection procedures may be required if deemed necessary and should be operated by experienced qualified technicians:
(a) radiographic equipment
(b) ultrasonic equipment
(c) magnetic particle equipment
(d) dye penetrant

4.8 Survey at sea or at anchorage

4.8.1 Voyage surveys may be accepted provided the survey party is given the necessary assistance from the shipboard personnel. The necessary precautions and procedures for carrying out the survey are to be in accordance with **4.1** to **4.7** inclusive. Ballasting system must be secured at all times during tank surveys.

4.8.2 A communication system is to be arranged between the survey party in the spaces under examination and the responsible officer on deck.

4.9 Documentation on board

4.9.1 The following documentation is to be placed on board and maintained and updated by the owner for the life of ship in order to be readily available for the survey party.

4.9.2 Survey Report File: This file includes Reports of Structural Surveys, Executive Summary and Thickness Measurement Report.

4.9.3 Supporting Documents: The following additional documentation is to be placed on board, including any other information that will assist in identifying Suspect Areas requiring examination.
(a) Main structural plans of cargo holds and ballast tanks
(b) Previous repair history
(c) Cargo and ballast history
(d) Inspection and action taken by ship's personnel with reference to:
- structural deterioration in general

- leakages in bulkheads and piping
- condition of coating or corrosion protection, if any

(e) Survey Planning Document according to principles given in **4.3**

4.9.4 Prior to inspection, the completeness of the documentation onboard, and its contents as a basis for the survey should be examined.

5 Structural detail failures and repairs

5.1 General

5.1.1 The **catalogue of structural detail failures and repairs** contained in this section of the **Guidelines** collates data supplied by the IACS Member Societies and is intended to provide guidance when considering similar cases of damage and failure. The proposed repairs reflect the experience of the surveyors of the Member Societies, but it is realized that other satisfactory alternative methods of repair may be available. However, in each case the repairs are to be completed to the satisfaction of the Classification Society surveyor concerned.

5.2 Catalogue of structural detail failures and repairs

5.2.1 The catalogue has been sub-divided into parts and areas to be given particular attention during the surveys:

Part 1 Cargo hold region

Area 1 Deck structure
Area 2 Topside tank structure
Area 3 Side structure
Area 4 Transverse bulkheads including stool structure
Area 5 Double bottom including hopper tank structure

Part 2 Fore and aft end regions

Area 1 Fore end structure
Area 2 Aft end structure
Area 3 Stern frame, rudder arrangement and propeller shaft support

Part 3 Machinery and accommodation spaces

Area 1 Engine room structure
Area 2 Accommodation structure

Part 1 Cargo hold region

Contents

Area 1 Deck structure
Area 2 Topside tank structure
Area 3 Side structure
Area 4 Transverse bulkheads including stool structure
Area 5 Double bottom including hopper tank structure

Area 1 Deck structure

Contents

1 General

2 What to look for - On-deck inspection
2.1 Material wastage
2.2 Deformations
2.3 Fractures

3 What to look for - Under-deck inspection
3.1 Material wastage
3.2 Deformations
3.3 Fractures

4 General comments on repair
4.1 Material wastage
4.2 Deformations
4.3 Fractures
4.4 Miscellaneous

Figures and/or Photographs - Area 1	
No.	**Title**
Photograph 1	Heavy corrosion of hatch coaming and topside tank plating vertical strake

Examples of structural detail failures and repairs - Area 1	
Example No.	**Title**
1	Fractures at main cargo hatch corner
2-a	Fracture of welded seam between thick plate and thin plate at cross deck
2-b	Plate buckling in thin plate near thick plate at cross deck
2-c	Overall buckling of cross deck plating
3-a	Fractures in the web or in the deck at the toes of the longitudinal hatch coaming termination bracket
3-b	Fractures in the web or in the deck at the toes of the longitudinal hatch coaming termination bracket
4	Fractures in deck plating initiated from weld of access manhole
5	Deformed and fractured deck plating around tug bitt
6	Fractures around cut-outs in cross deck girder
7-a	Buckling of hatch coaming and hatch end beam
7-b	Fractures in hatch end beam at knuckle joint

Examples of structural detail failures and repairs - Area 1	
Example No.	**Title**
8	Fractures in hatch end beam at the joint to topside tank
9	Fractures in hatch end beam around feeding holes
10-a	Fractures in hatch coaming top plate at the termination of rail for hatch cover
10-b	Fractures in hatch coaming top plate at the termination of rail for hatch cover
11	Fractures in hatch coaming top plate initiated from butt weld of compression bar
12	Fractures in deck plating at the pilot ladder access of bulwarks

1 General

1.1 Deck structure outside hatches is subjected to longitudinal hull girder bending, caused by cargo distribution and wave actions. Moreover deck structure may be subjected to severe load due to green sea on deck, excessive deck cargo or improper cargo handling. Certain areas of the deck may also be subjected to additional compressive stresses caused by slamming or bow flare effect at the fore ship in heavy weather.

1.2 The cross deck structure between cargo hatches is subjected to transverse compression from the sea pressure on the ship sides and in-plane bending due to torsional distortion of the hull girder under wave action. Area around the corners of a main cargo hatch can be subjected to high cyclical stress due to the combined effect of hull girder bending moments, transverse and torsional loading.

1.3 Discontinuous cargo hatch side coamings can be subjected to significant longitudinal bending stress. This introduces additional stresses at the mid-length of hatches and stress concentrations at the termination of the side coaming extensions.

1.4 Hatch cover operations, in combination with poor maintenance, can result in damage to cleats and gasket, leading to the loss of weathertight integrity of the hold spaces. Damage to hatch covers can also be sustained by mishandling and overloading of deck cargoes.

1.5 The marine environment, the humid atmosphere due to the water vapour from the cargo in cargo holds, and the high temperature on deck and hatch cover plating due to heating from the sun may result in accelerated corrosion of plating and stiffeners making the structure more vulnerable to the exposures described above.

1.6 Bulwarks are provided for the protection of crew and cargoes, and lashing of cargoes on deck. Although bulwarks are not normally considered as a structural item which contributes to the longitudinal strength of the hull girder, they can be subjected to significant longitudinal bending stress which can lead to fracture and corrosion, especially at the termination of bulwarks, such as at pilot ladder access or expansion joints. These fractures may propagate to deck plating and cause serious damage.

1.7 The deterioration of fittings on deck, such as ventilators, air pipes and sounding pipes, may cause serious deficiency in weathertightness/ watertightness and during fire fighting.

1.8 If the ship is assigned timber freeboards, fittings for stowage of timber deck cargo have to be inspected in accordance with ILLC 1966. Deterioration of the fittings may cause cargo to shift resulting in damage to the ship structure.

2 What to look for - On-deck inspection

2.1 Material wastage

2.1.1 The general corrosion condition of the deck structure, cargo hatch covers and coamings may be observed by visual inspection. Special attention should be paid to areas where pipes, e.g. fire main pipes, hydraulic pipes and pipes for compressed air, are fitted close to the plating, making proper maintenance of the protective coating difficult to carry out.

2.1.2 Grooving corrosion may occur at the transition between the thicker deck plating outside line of cargo hatches and the thinner cross deck plating, especially when the difference in plate thickness is large. The difference in plate thickness causes water to gather in this area resulting in corrosion ambience which may subsequently lead to grooving.

2.1.3 Pitting corrosion may occur throughout the cross deck strip plating and on hatch covers. The combination of accumulated water with scattered residue of certain cargoes may create a corrosive reaction.

2.1.4 Wastage/corrosion may affect the integrity of steel hatch covers and the associated moving parts, e.g. cleats, pot-lifts, roller wheels, etc. In some ships pontoon hatch covers with tarpaulins are used. The tarpaulins are liable to tear due to deck cargo, such as timbers, and cause heavy corrosion to the hatch covers.

2.2 Deformations

2.2.1 Plate buckling (between stiffeners) may occur in areas subjected to in-plane compressive stresses, in particular if corrosion is in evidence. Special attention should be paid to areas where the compressive stresses are perpendicular to the direction of the stiffening system. Such areas may be found in the cross deck strips between hatches when longitudinal stiffening is applied (See **Examples 2-b** and **2-c**).

2.2.2 Deformed structure may be observed in areas of the deck, hatch coamings and hatch covers where cargo has been handled/loaded or mechanical equipment, e.g. hatch covers, has been operated. In exposed deck area, in particular deck forward, deformation of structure may result from shipping green water.

2.2.3 Deformation/twisting of exposed structure above deck, such as side-coaming brackets and bulwarks, may result from impact due to improper handling of cargo and cargo handling machinery. Such damages may also be caused by shipping of green sea water on deck in heavy weather.

2.3 Fractures

2.3.1 Fractures in areas of structural discontinuity and stress concentration will normally be detected by close-up inspection. Special attention should be given to the structures at cargo hatches in general and to corners of deck openings in particular.

2.3.2 Fractures initiated in the deck plating outside the line of hatch (See **Example 1**) may propagate across the deck resulting in serious damage to hull structural integrity. Fractures initiated in the deck plating of the cross deck strip, in particular at the transition between the thicker deck plating and the thinner cross deck plating (See **Example 2-a**), may cause serious consequences if not repaired immediately.

2.3.3 Other fractures that may occur in the deck plating at hatches and in connected coamings can result/originate from:

(a) The geometry of the corners of the hatch openings.
(b) Grooving caused by wire ropes of cargo gear.
(c) Welded attachment and shedder plate close to or on the free edge of the hatch corner plating.
(d) Fillet weld connection of the coaming to deck, particularly at a radiused coaming plate at the hatch corner plating.
(e) Attachments, cut-outs and notches for securing devices, and operating mechanisms for opening/closing hatch covers at the top of the coaming and/or coaming top bar, if any, at the mid-length of hatch (See **Examples 10-a**, **10-b** and **11**).
(f) The termination of the side coaming extension brackets (See **Examples 3-a** and **b**).

2.3.4 Fractures in deck plating often occur at the termination of bulwarks, such as pilot ladder recess, due to stress concentration. The fractures may propagate resulting in serious casualty when the deck is subject to high longitudinal bending stress (See **Example 12**).

3 What to look for - Under-deck inspection

3.1 Material wastage

3.1.1 The level of wastage of under-deck stiffeners/structure in cross deck may have to be established by means of thickness measurements. The combined effect of the marine environment and the high humidity atmosphere within cargo hold s will give rise to a high corrosion rate.

3.1.2 Severe corrosion of the hatch coaming plating inside cargo hold and topside tank plating vertical strake may occur due to difficult access for the maintenance of the protective coating. This may lead to fractures in the structure (See **Photograph 1**).



Photograph 1 **Heavy corrosion of hatch coaming and topside tank plating vertical strake**

3.2 Deformations

3.2.1 Buckling should be looked for in the primary supporting structure, e.g. hatch end beams and topside tank plating vertical strake. Such buckling may be caused by:

(a) Loading deviated from loading manual (block loading).
(b) Excessive sea water pressure in heavy weather.
(c) Excessive deck cargo.
(d) Sea water on deck in heavy weather.
(e) Combination of these causes.

3.2.2 Improper ventilation during ballasting/deballasting of topside tank/ballast hold may cause deformation in deck structure. If such deformation is observed, internal inspection of topside tank/ballast hold should be carried out in order to confirm the nature and the extent of damage.

3.3 Fractures

3.3.1 Fractures may occur at the connection between the deck plating, transverse bulkhead and

girders/stiffeners. This is often associated with a reduction in area of the connection due to corrosion.

3.3.2 Fractures in primary supporting structure, e.g. hatch end beams, may be found in the weld connections to the topside tank plating vertical strake and to the girders.

4 General comments on repair

4.1 Material wastage

4.1.1 In the case of grooving corrosion at the transition between the thicker deck plating outside line of cargo hatches and the thinner cross deck plating, consideration should be given to renewal of part of, or the entire width of, the adjacent cross deck plating.

4.1.2 In the case of pitting corrosion throughout the cross deck strip plating, consideration should be given to renewal of part of or the entire cross deck plating.

4.1.3 When heavy wastage is found on under-deck structure, the whole or part of the structure may be cropped and renewed depending on the permissible diminution levels allowed by the Classification Society concerned.

4.1.4 For wastage of cargo hatch covers a satisfactory thickness determination is to be carried out and the plating and stiffeners are to be cropped and renewed as appropriate depending on the extent of the wastage.

4.2 Deformations

4.2.1 When buckling of the deck plating has occurred, appropriate reinforcement is necessary in addition to cropping and renewal regardless of the corrosion condition of the plating.

4.2.2 Where buckling of hatch end beams has occurred due to inadequate transverse strength, the plating should be cropped and renewed with additional panel stiffeners fitted.

4.2.3 Buckled cross deck structure, due to loss in strength caused by wastage, is to be cropped and renewed as necessary. If the cross deck is stiffened longitudinally and the buckling results from inadequate transverse strength, additional transverse stiffeners should be fitted (See **Example 2-b** and **2-c**).

4.2.4 Deformations of cargo hatch covers should be cropped and part renewed, or renewed in full, depending on the extent of the damage.

4.3 Fractures

4.3.1 Fractures in way of cargo hatch corners should be carefully examined in conjunction with the design details (See **Example 1**). Re-welding of such fractures is normally not considered to be a permanent solution. Where the difference in thickness between an insert plate and the adjacent deck plating is greater than 3 mm, the edge of the insert plate should be suitably beveled. In order to reduce the residual stress arising from this repair situation, the welding sequence and procedure is to be carefully monitored and low hydrogen electrodes should be used for welding the insert plate to the adjoining structure.

4.3.2 Where welded shedder plates are fitted into the corners of the hatch coamings and the stress concentration at the deck connection is considered to be the cause of the fractures, the deck connection should be left unwelded

4.3.3 In the case of fractures at the transition between the thicker deck plating outside line of cargo hatches and the thinner cross deck plating, consideration should be given to renewal of part or the entire width of the adjacent cross deck plating, possibly with increased thickness (See **Example 2-a**).

4.3.4 When fractures have occurred in the connection of transverse bulkhead to the cross deck structure, consideration should be given to renew and re-weld the connecting structure beyond the damaged area with the aim of increasing the area of the connection.

4.3.5 Fractures of hatch end beams should be repaired by renewing the damaged structure, and by full penetration welding to the deck.

4.3.6 To reduce the possibility of future fractures in cargo hatch coamings the following details should be observed:

(a) Cut-outs and other discontinuities at top of coaming and/ or coaming top bar should have rounded corners (preferably elliptical or circular in shape) (See **Example 10-b**).
Any local reinforcement should be given a tapered transition in the longitudinal direction and the rate of taper should not exceed 1 in 3 (See **Example 10-a**).

(b) Fractures, which occur in the fillet weld connection to the deck of radiused coaming plates at the corners, should be repaired by replacing existing fillet welds with full penetration welding using low hydrogen electrodes or equivalent. If the fractures are extensive and recurring, the coamings should be redesigned to form square corners with the side coaming extending in the form of tapered brackets. Continuation brackets are to be arranged transversely in line with the hatch end coamings and the under-deck transverse.

(c) Cut-outs and drain holes are to be avoided in the hatch side coaming extension brackets. For fractured brackets, see **Examples 3 a** and **b**.

4.3.7 For cargo hatch covers, fractures of a minor nature may be veed-out and welded. For more extensive fractures, the structure should be cropped and part renewed.

4.3.8 For fractures without significant corrosion at the end of bulwarks, an attempt should be made to modify the design in order to reduce the stress concentration in connection with general cropping and renewal (See **Example 12**).

4.4 Miscellaneous

4.4.1 Ancillary equipment such as cleats, rollers etc. on cargo hatch covers is to be renewed as necessary when damaged or corroded.

BULK CARRIERS	Guidelines for Surveys, Assessment and Repair of Hull Structure	
Part 1	**Cargo hold region**	**Example No.**
Area 1	**Deck structure**	**1**
Detail of damage	Fractures at main cargo hatch corner	

Sketch of damage

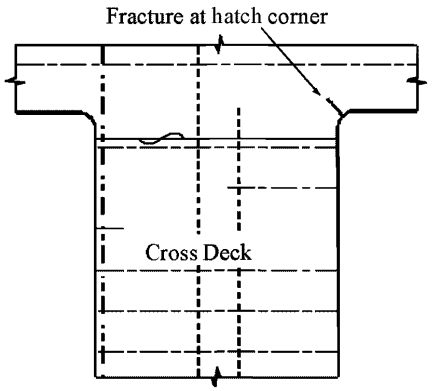

Sketch of repair

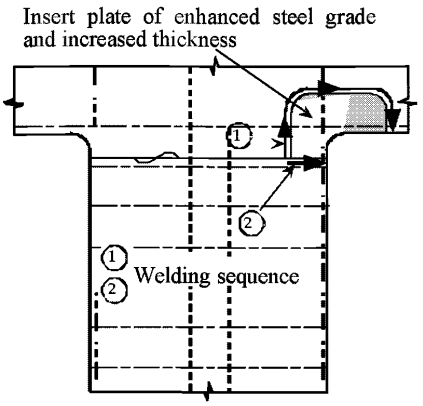

Notes on possible cause of damage

1. Stress concentration at hatch corners, i.e. radius of corner.
2. Welded attachment of shedder plate close to edge of hatch corner.
3. Wire rope groove.

Notes on repairs

1. The corner plating in way of the fracture is to be cropped and renewed. If stress concentration is primary cause, insert plate should be increased thickness, enhanced steel grade and/or improved geometry.
   Insert plate should be continued beyond the longitudinal and transverse extent of the hatch corner radius ellipse or parabola, and the butt welds to the adjacent deck plating should be located well clear of the butts in the hatch coaming.
   It is recommended that the edges of the insert plate and the butt welds connecting the insert plates to the surrounding deck plating be made smooth by grinding. In this respect caution should be taken to ensure that the micro grooves of the grinding are parallel to the plate edge.
2. If the cause of fracture is welded attachment of shedder plate, the deck connection should be left unwelded.
3. If the cause of the fracture is wire rope groove, replacement to the original design can be accepted.

BULK CARRIERS	Guidelines for Surveys, Assessment and Repair of Hull Structure	
Part 1	**Cargo hold region**	**Example No.**
Area 1	**Deck structure**	**2-a**
Detail of damage	Fractures of welded seam between thick plate and thin plate at cross deck	

Sketch of damage

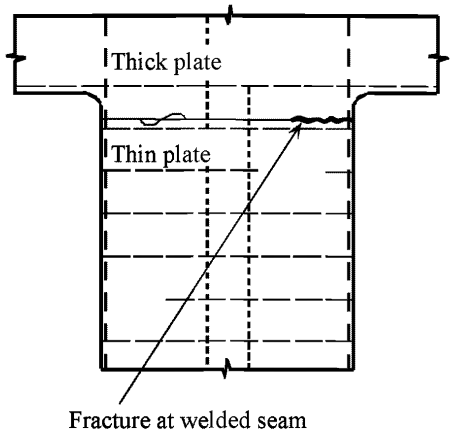

Sketch of repair

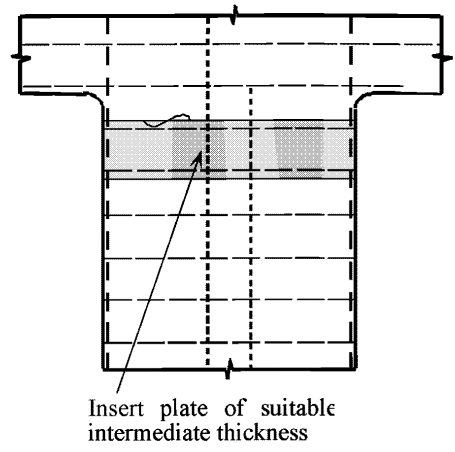

Notes on possible cause of damage

1. Stress concentration created by abrupt change in deck plating thickness.
2. In-plane bending in cross deck strip due to torsional (longitudinal) movements of ship sides.
3. Welded seam not clear of tangent point of hatch corner.

Notes on repairs

1. Insert plate of intermediate thickness is recommended.
2. Smooth transition between plates (beveling) should be considered.

BULK CARRIERS	Guidelines for Surveys, Assessment and Repair of Hull Structure	
Part 1	**Cargo hold region**	**Example No.**
Area 1	**Deck structure**	**2-b**
Detail of damage	Plate buckling in thin plate near thick plate at cross deck	

Sketch of damage

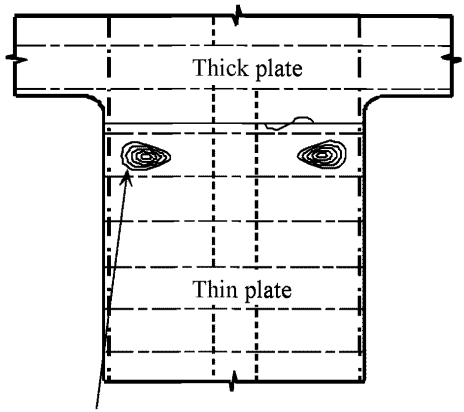

Buckling of cross deck plating (Buckling of hatch end structure should be examined. Refer to **Example 7-a**.)

Sketch of repair

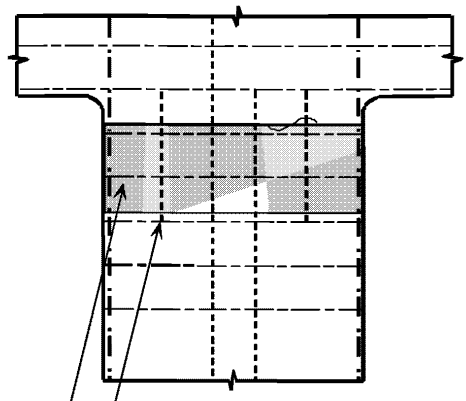

Additional transverse stiffening and/or insertion of plate with suitable intermediate thickness

Notes on possible cause of damage

1. In-plane bending of cross deck strip due to torsional (longitudinal) movement of ship sides, often in combination with corrosion.
2. Insufficient plate thickness and/or transverse stiffening.

Notes on repairs

1. Transverse stiffeners extending from hatch sides towards centerline at least 10% of breadth of hatch, and/or increased plate thickness in the same area.

BULK CARRIERS	Guidelines for Surveys, Assessment and Repair of Hull Structure	
Part 1	Cargo hold region	Example No.
Area 1	Deck structure	2-c
Detail of damage	Overall buckling of cross deck plating	

Sketch of damage

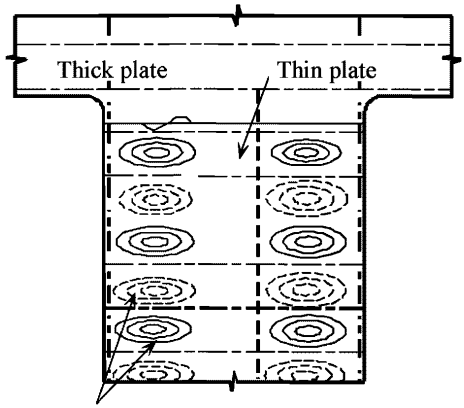

Buckling of cross deck plating (Buckling of hatch end structure should be examined. Refer to **Example 7-a.**)

Sketch of repair

Repair A

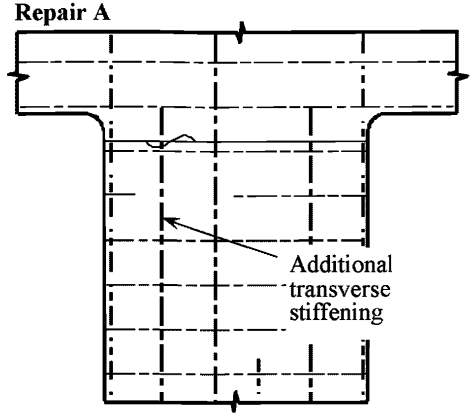

Repair B

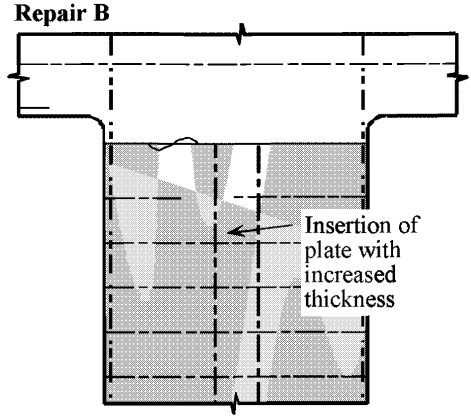

Notes on possible cause of damage

1. Transverse compression of deck due to sea load.
2. Transverse compression of deck due to excessive loading in two adjacent holds.
3. Insufficient plate thickness and/or transverse stiffening.

Notes on repairs

1. **Repair A** Plating of original thickness in combination with additional transverse stiffening.
2. **Repair B** Insertion of plating of increased thickness.

BULK CARRIERS	Guidelines for Surveys, Assessment and Repair of Hull Structure	
Part 1	Cargo hold region	Example No.
Area 1	Deck structure	3-a
Detail of damage	Fractures in the web or in the deck at the toes of the longitudinal hatch coaming termination bracket	

Sketch of damage

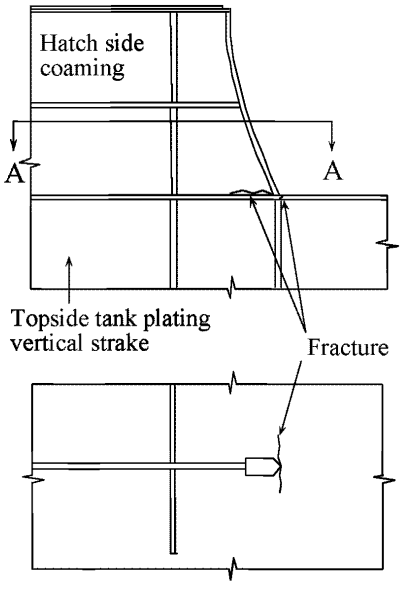

View A-A

Sketch of repair

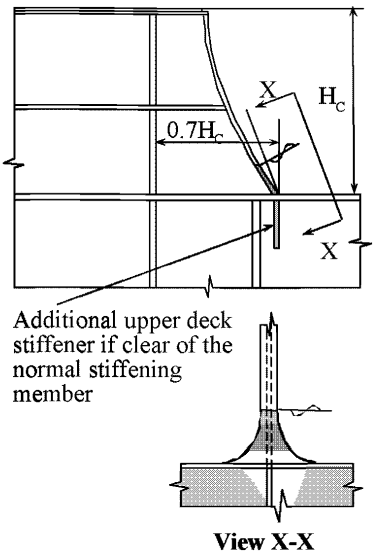

View X-X

Notes on possible cause of damage

1. This damage is caused by stress concentrations attributed to the design of the bracket.

Notes on repairs

1. The design of the bracket can be altered as shown above, however, it is to be ensured that an additional under deck stiffener is provided at the toe of the termination bracket, where the toe is clear of the normal stiffening member.
2. Full penetration weld for a distance of 0.15 H_C from toe of side coaming termination bracket and for connection of athwartship gusset bracket to deck.
3. The fracture in deck plating to be veed-out and rewelded or deck plating cropped and part renewed as appropriate, using low hydrogen electrodes for welding.

BULK CARRIERS	Guidelines for Surveys, Assessment and Repair of Hull Structure	
Part 1	Cargo hold region	Example No.
Area 1	Deck structure	3-b
Detail of damage	Fractures in the web or in the deck at the toes of the longitudinal hatch coaming termination bracket	

Sketch of damage

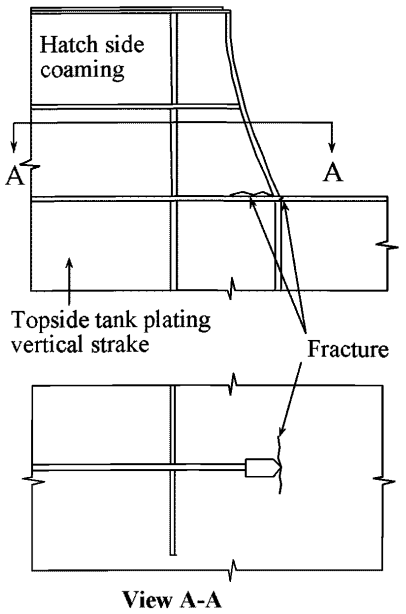

Sketch of repair

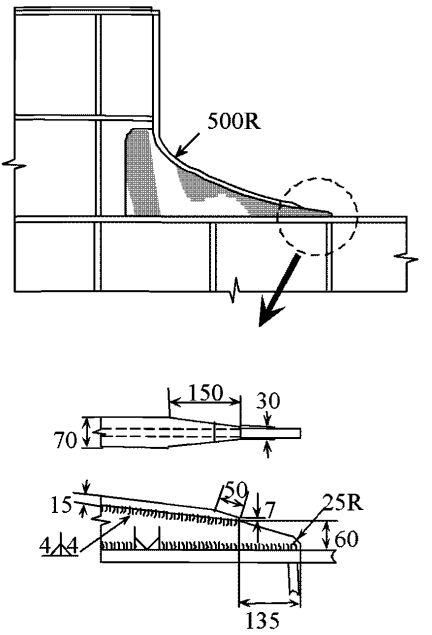

Notes on possible cause of damage

1. This damage is caused by stress concentrations attributed to the design of the bracket.

Notes on repairs

1. The design of the bracket can be altered as shown above, however, it is to be ensured that an additional under deck stiffener is provided at the toe of the termination bracket, where the toe is clear of the normal stiffening member.
2. The fracture in deck plating to be veed-out and rewelded or deck plating cropped and part renewed as appropriate, using low hydrogen electrodes for welding.

BULK CARRIERS	Guidelines for Surveys, Assessment and Repair of Hull Structure	
Part 1	Cargo hold region	Example No.
Area 1	Deck structure	4
Detail of damage	Fractures in deck plating initiated from weld of access manhole	

Sketch of damage

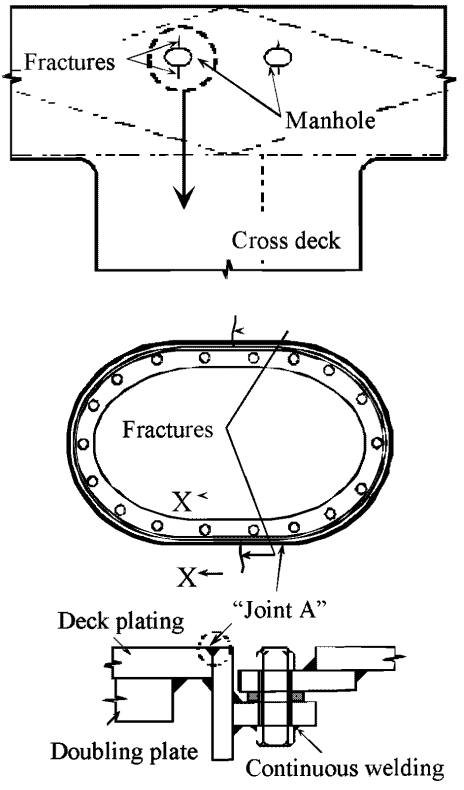

Section X-X

Sketch of repair

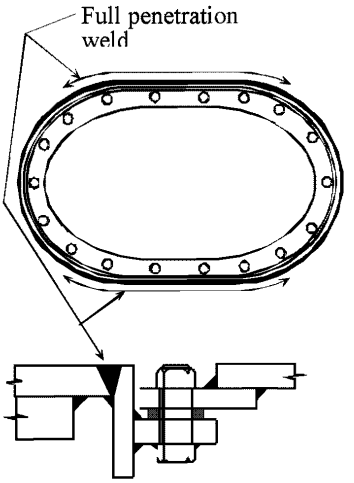

Notes on possible cause of damage

1. Heavy weather.
2. Improper welding of joint "A".

Notes on repairs

1. The fracture in deck plating to be veed-out and rewelded, or deck plating cropped and part renewed if considered necessary.
2. Full penetration of joint "A" should be considered.

BULK CARRIERS	Guidelines for Surveys, Assessment and Repair of Hull Structure	
Part 1	**Cargo hold region**	**Example No.**
Area 1	**Deck structure**	**5**
Detail of damage	Deformed and fractured deck plating around tug bitt	

Sketch of damage

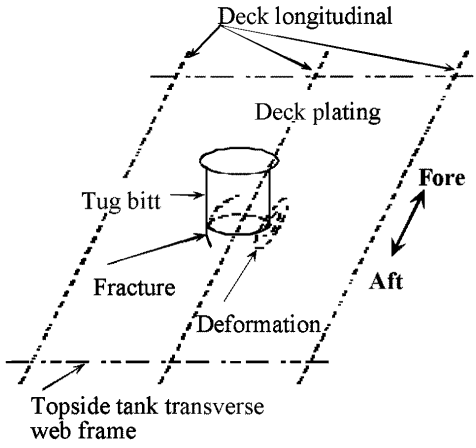

Sketch of repair

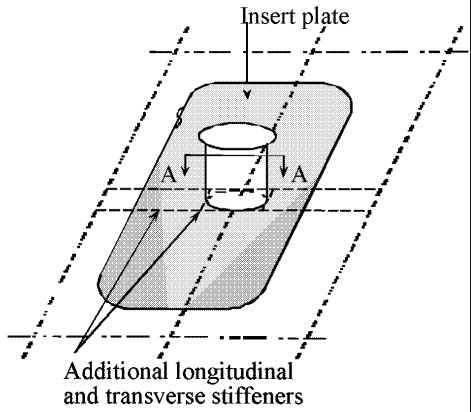

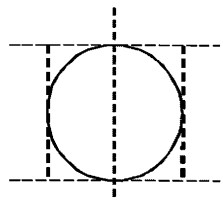

View A-A

Notes on possible cause of damage

1. Insufficient strength

Notes on repairs

1. Fractured/deformed deck plating should be cropped and part renewed.
2. Reinforcement by stiffeners should be considered.

BULK CARRIERS	Guidelines for Surveys, Assessment and Repair of Hull Structure	
Part 1	**Cargo hold region**	**Example No. 6**
Area 1	**Deck structure**	
Detail of damage	Fractures around cut-outs in cross deck girder	

Sketch of damage

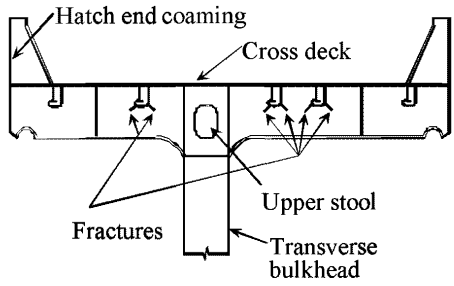

Sketch of repair

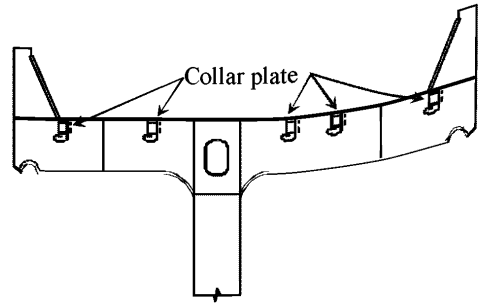

Notes on possible cause of damage

1. Stress concentration at the cut-outs in cross deck girder.

Notes on repairs

1. Fractured web plate of cross deck girder to be cropped and part renewed.
2. Collar plates to be provided.

BULK CARRIERS	Guidelines for Surveys, Assessment and Repair of Hull Structure	
Part 1	Cargo hold region	Example No.
Area 1	Deck structure	7-a
Detail of damage	Buckling of hatch coaming and hatch end beam	

Sketch of damage

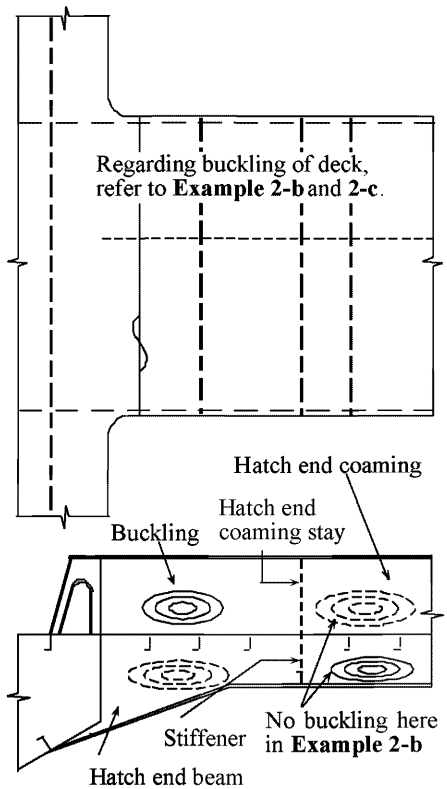

Sketch of repair

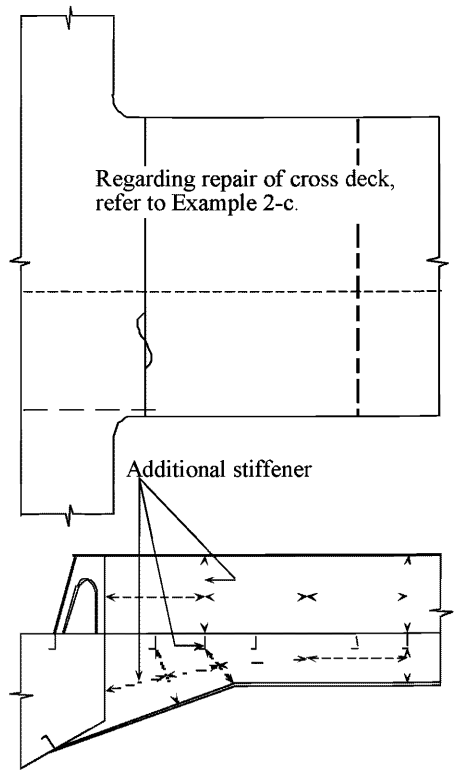

Notes on possible cause of damage

1. Additional transverse forces due to heavy seas, and torsional loading.
2. Inadvertent overloading of cargo spaces.

Notes on repairs

1. If buckling is due to loss in strength induced by corrosion, the buckled zone to be cropped and renewed as necessary.
2. If buckling results from inadequate strength, stiffeners should be fitted in addition to cropping and renewal of buckled zone.

BULK CARRIERS	Guidelines for Surveys, Assessment and Repair of Hull Structure	
Part 1	**Cargo hold region**	**Example No.**
Area 1	**Deck structure**	**7-b**
Detail of damage	Fractures in hatch end beam at knuckle joint	

Sketch of damage

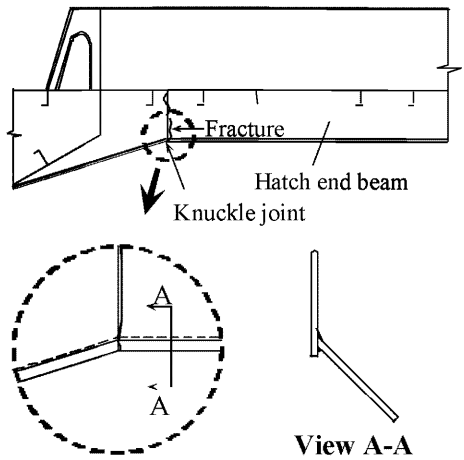

Sketch of repair

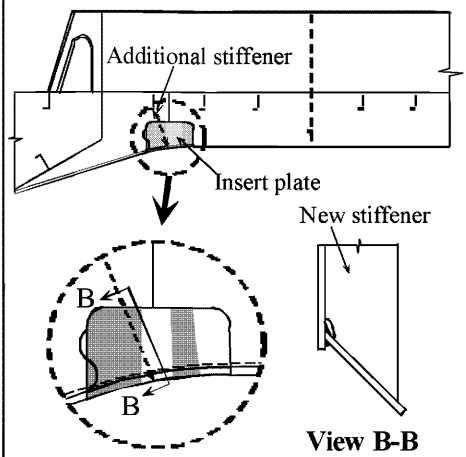

Notes on possible cause of damage

1. Stress concentration at knuckle joint.

Notes on repairs

1. Fractured part to be cropped and renewed.
2. Improvement to avoid stress concentration at knuckle joint should be considered.

BULK CARRIERS	Guidelines for Surveys, Assessment and Repair of Hull Structure	
Part 1	**Cargo hold region**	**Example No.**
Area 1	**Deck structure**	**8**
Detail of damage	Fractures in hatch end beam at the joint to topside tank	

Sketch of damage

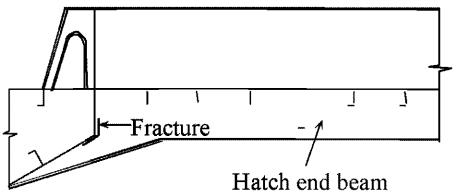

Sketch of repair

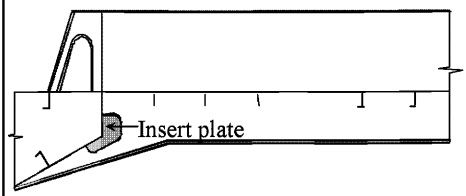

Notes on possible cause of damage

1. Misalignment of the hatch end beam with transverse web frame in topside tank.
2. Stress concentration.

Notes on repairs

1. Fractured part to be cropped and renewed.

BULK CARRIERS	Guidelines for Surveys, Assessment and Repair of Hull Structure	
Part 1	**Cargo hold region**	**Example No.**
Area 1	**Deck structure**	**9**
Detail of damage	Fractures in hatch end beam around feeding holes	

Sketch of damage

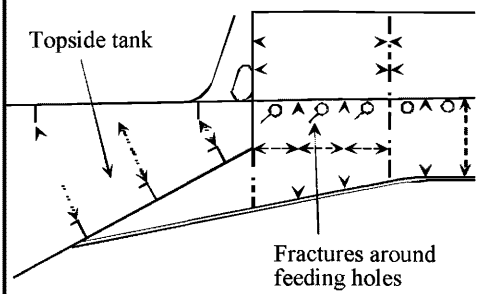

Sketch of repair

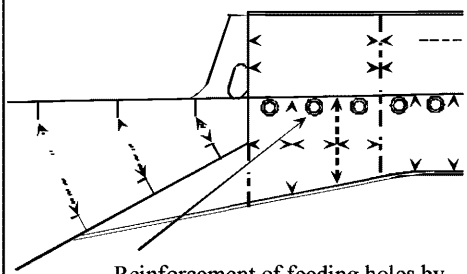

Reinforcement of feeding holes by doubling plate or insert of pipe. See "Detail" below.

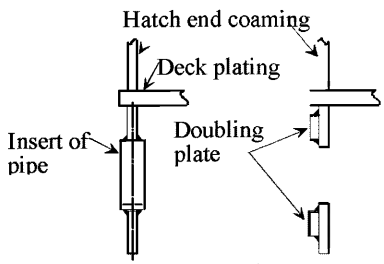

Detail

Notes on possible cause of damage

1. Inadequate reinforcement around feeding hole.
2. Corrosion.

Notes on repairs

1. Fractured part to be veed-out or cropped and renewed.
2. If the fractured part is free from corrosion, reinforcement should be considered.

BULK CARRIERS	Guidelines for Surveys, Assessment and Repair of Hull Structure	
Part 1	**Cargo hold region**	**Example No.**
Area 1	**Deck structure**	**10-a**
Detail of damage	Fractures in hatch coaming top plate at the termination of rail for hatch cover	

Sketch of damage

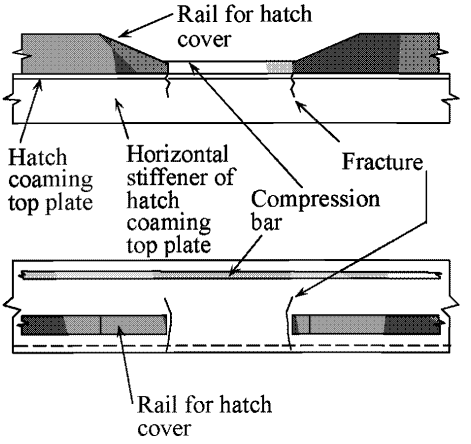

Sketch of repair

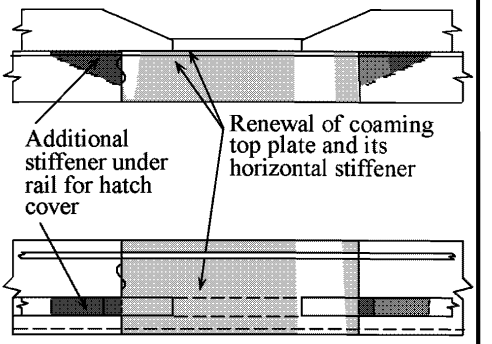

Notes on possible cause of damage

1. Stress concentration at the termination of the rail for hatch cover due to poor design.

Notes on repairs

1. Fractured plate is to be cropped and part renewed.
2. Thicker insert plate and/or reinforcement by additional stiffener under the top plate should be considered. Also refer to **Example 10-b**.

BULK CARRIERS	Guidelines for Surveys, Assessment and Repair of Hull Structure	
Part 1	Cargo hold region	Example No.
Area 1	Deck structure	10-b
Detail of damage	Fractures in hatch coaming top plate at the termination of rail for hatch cover	

Sketch of damage

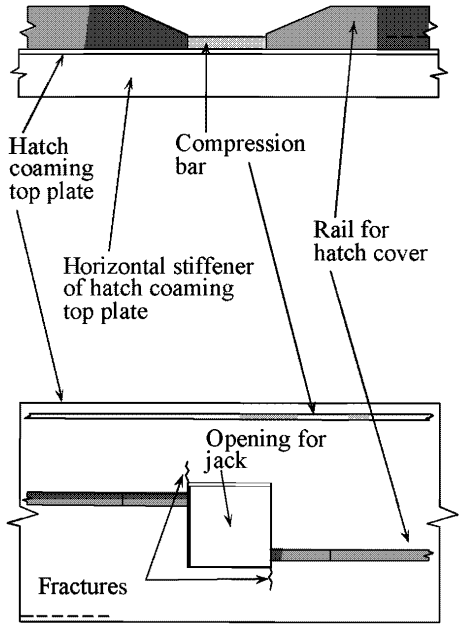

Sketch of repair

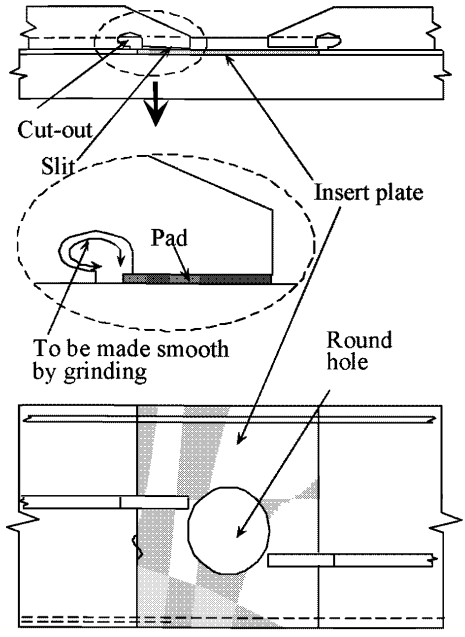

Notes on possible cause of damage

1. Stress concentration at the termination of the rail for hatch cover due to poor design of opening.

Notes on repairs

1. Fractured plate is to be cropped and part renewed.
2. Thicker insert plate and/or reduction of stress concentration adopting large radius should be considered. Or cut-out in the rail and detachment of the welds as shown in the above drawing should be considered in order to reduce the stress of the corner of the opening.

BULK CARRIERS	Guidelines for Surveys, Assessment and Repair of Hull Structure	
Part 1	**Cargo hold region**	**Example No.**
Area 1	**Deck structure**	**11**
Detail of damage	Fractures in hatch coaming top plate initiated from butt weld of compression bar	

Sketch of damage

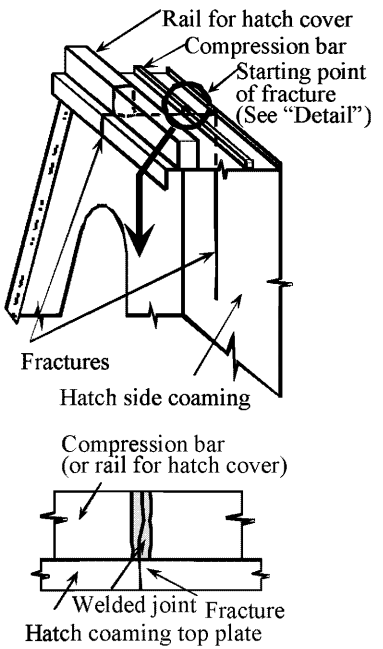

Sketch of repair

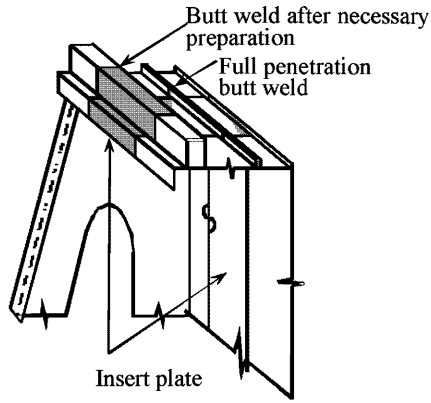

Notes on possible cause of damage

1. Heavy weather
2. Insufficient preparation of weld of compression bar and/or rail (Although the compression bar and rail are not longitudinal strength members, they subject same longitudinal stress as longitudinal members)
3. Crack may initiate from insufficient penetration of weld of rail for hatch cover.

Notes on repairs

1. Loading condition of the ship and proper welding procedure should be carefully considered.
2. Fractured structure is to be cropped and renewed if considered necessary. (Small fracture may be veed-out and rewelded.)
3. Full penetration welding should be applied to the butt weld of compression bar and rail.

BULK CARRIERS	Guidelines for Surveys, Assessment and Repair of Hull Structure	
Part 1	Cargo hold region	Example No.
Area 1	Deck structure	12
Detail of damage	Fractures in deck plating at the pilot ladder access of bulwarks	

Sketch of damage

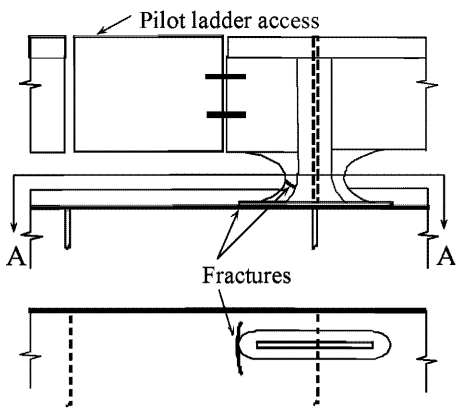

View A-A

Sketch of repair

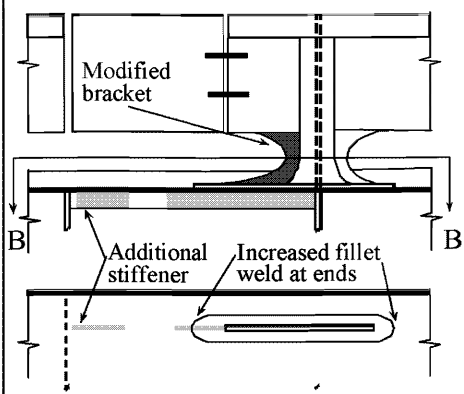

View B-B

Notes on possible cause of damage

1. Stress concentration at the termination of bulwarks.

Notes on repairs

1. Fractured deck plating should be cropped and part renewed.
2. Reduction of stress concentration should be considered. In the above figure gusset plate was replaced with soft type for the fracture in gusset plate and pad plate was increased. Additional stiffeners were provided for the fracture in deck plating.

Area 2 Topside tank structure

Contents

1 General

2 What to look for
2.1 Material wastage
2.2 Deformations
2.3 Fractures

3 General comments on repair
3.1 Material wastage
3.2 Deformations
3.3 Fractures

Figures and/or Photographs - Area 2	
No.	**Title**
Figure 1	Topside tank - Potential problem areas

Examples of structural detail failures and repairs - Area 2	
Example No.	**Title**
1	Fractures around unstiffened lightening holes and manholes in wash bulkhead
2-a	Thinning and subsequent buckling of web plating in the vicinity of the radii of the opening
2-b	Thinning and subsequent buckling of web plating in the vicinity of the radii of the opening
2-c	Thinning and subsequent buckling of web plating in the vicinity of the radii of the opening
3	Fractures in transverse web at sniped end of stiffener
4-a	Fractures at slots in way of transverse web frame
4-b	Fractures and buckling at slots in way of transverse web frame
5	Fractures in longitudinal at transverse web frame or bulkhead
6	Fractures in the lowest longitudinal at transverse web frame
7-a	Fractures in transverse brackets
7-b	Fractures in transverse bracket
7-c	Fractures at toes of transverse bracket
8	Fractures in sloping plating and vertical strake initiated from the connection of topside tank to hatch end beam
9	Fractures in sloping plating at knuckle

Examples of structural detail failures and repairs - Area 2	
Example No.	**Title**
10	Fractures in way of collision bulkhead at intersection with topside tank structure in foremost cargo hold
11	Fractures in way of engine room forward bulkhead at intersection with topside tank structure in aftermost cargo hold

1 General

1.1 Topside tanks are highly susceptible to corrosion and wastage of the internal structure. This is a major problem for all bulk carriers, particularly for ageing ships and others where the coatings have broken down. Coatings, if applied and properly maintained, serve as an indication as to whether the structure remains in satisfactory condition and highlights any structural defects.

In some ships topside tanks are protected by sacrificial anodes in addition to coatings. This system is not effective for the upper parts of the tanks since the system requires the structure to be fully immersed in sea water, and the tanks may not be completely filled during ballast voyages.

Other major factors contributing to damages of the topside tank structure are those associated with overpressurisation and sloshing in partially filled adjacent ballast tanks/holds due to ship rolling in heavy weather.

1.2 Termination of longitudinals in the fore and aft regions of the ship, in particular at the collision and engine room bulkheads, is prone to fracture due to high stress concentration if the termination detail is not properly designed. Knuckle joint in topside tanks in the fore and aft regions of the ship may suffer from fractures if the structure is not properly reinforced, see **Example 10**.

2 What to look for

2.1 Material wastage

2.1.1 The combined effect of the marine environment and the high humidity atmosphere within a topside tank hold will give rise to a high corrosion rate.

2.1.2 Rate and extent of corrosion depends on the environmental conditions, and protective measures employed, such as coatings and sacrificial anodes. The following structures are generally susceptible to corrosion (See **Figure 1**).

(a) Structure in corrosive environment
Deck plating and deck longitudinal
Transverse bulkhead adjacent to heated fuel oil tank
Lowest part of sloping plating

(b) Structure subject to high stress
Face plates and web plates of transverse at corners
Connection of side longitudinal to transverse

(c) Areas susceptible to coating breakdown
Back side of face plate of longitudinal
Welded joint
Edge of access opening

(d) Areas subjected to poor drainage
Web of side and sloping longitudinals

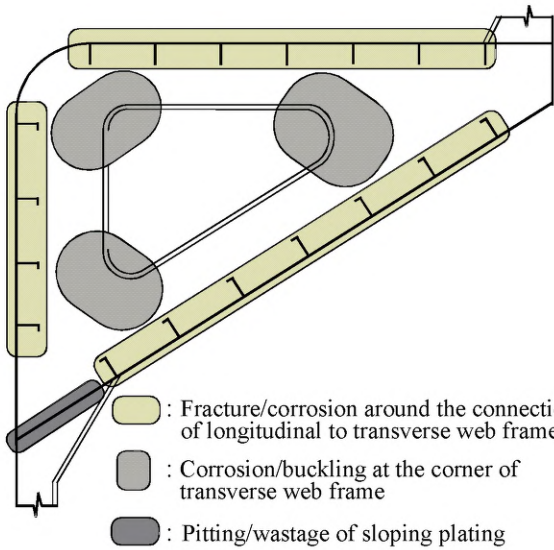

(a) Transverse web frame section

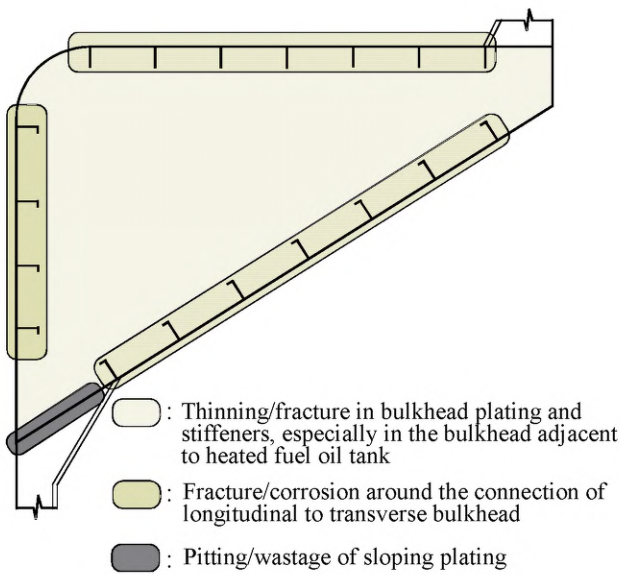

(b) Transverse bulkhead section

Figure 1 Topside tank - Potential problem areas

2.2 Deformations

2.2.1 Deformation of structure may be caused by contact (with quay side, ice, touching underwater objects, etc.), collision, mishandling of cargo and high stress. Attention should be paid to the following areas during inspection::

(a) Structure subjected to high stress
Buckling of transverse webs at corners

(b) Structure adjacent to a ballast hold
Deformations may be found in the following structural members caused by sloshing in partially filled ballast hold and/or by improper carriage of ballast water (See Note):
- Buckling of transverse web and/or collapse of transverse attached to sloping plating
- Deformation of sloping plating and/or collapse of sloping plating longitudinals
- Buckling of diaphragm, if provided

Note: In some bulk carriers the topside tanks in way of a ballast hold are designed to be filled when the hold is used for the carriage of water ballast. In such ships, if the topside tanks are not filled in the ballast condition, the structural members in the topside tanks may suffer fracture/deformation as a result of increased stress.

2.2.2 Improper ventilation during ballasting/deballasting of topside tank/ballast hold may cause deformation in deck structure and damage to topside tank structure. If such deformation is observed during on-deck inspection, internal inspection of topside tank should be carried out in order to confirm the nature and the extent of damage.

2.3 Fractures

2.3.1 Attention should be paid to the following areas during inspection for fracture damage:

(a) Areas subjected to stress concentration
- Welded joints of face plate of transverse at corners
- Connection of sniped ends of stiffener to transverse web, near or at corners of the transverse
- Connection of the lowest longitudinal to transverse web frame, especially with reduced scantlings (See **Example 6**).
- Termination of longitudinal in fore and aft topside tanks
- Knuckle joint of sloping plating in foremost and aftermost topside tanks (See **Example 9**).
- Transition regions in foremost and aftermost topside tanks (Refer to **2.3.2**)
- Connection in line with hold transverse bulkhead corrugations and transverse stools
- Connection in line with the side shell transverse framing, and end brackets, particularly at the bracket toes

(b) Areas subjected to dynamic wave loading
- Connection of side longitudinal to watertight bulkhead
- Connection of side longitudinal to transverse web frame

2.3.2 The termination of the following structural members at the collision bulkhead or engine room forward bulkhead is prone to fracture damage due to discontinuity of the structure:

- Topside tank sloping plating
- Topside tank plating vertical strake
- Fore peak tank top plating (Boatswain's store deck plating)
- Longitudinal bulkhead of fuel tank in engine room

In order to avoid stress concentration due to discontinuity appropriate stiffeners are to be provided in the opposite space. If such stiffeners are not provided, or are deficient due to corrosion or misalignment, fractures may occur at the terminations.

3 General comments on repair

3.1 Material wastage

3.1.1 If the corrosion is caused by high stress concentration, renewal with original thickness is not sufficient to avoid reoccurrence.
Renewal with increased thickness and/or appropriate reinforcement should be considered in conjunction with appropriate corrosion protective measures.

3.2 Deformations

3.2.1 The cause of damage should always be identified. If the damage is due to negligence in operation, the ship representative should be notified. If the deformation is caused by inadequate structural strength, appropriate reinforcement should be considered. Where the deformation is related to corrosion, appropriate corrosion protective measures should be considered.

3.3 Fractures

3.3.1 If the cause of the fracture is fatigue under the action of cyclic wave loading, consideration should be given to the improvement of structural detail design, such as provision of soft toe bracket, to reduce stress concentration. If the fatigue fracture is vibration related, the damage is usually associated with moderate stress levels at high cycle rate, improvement of structural detail may not be effective. In this case, measures for increasing structural damping and avoidance of resonance, such as providing additional stiffening, may be considered.

Where fracture occurs due to material under excessive stress, indicating inadequate structural strength, renewal with thicker plate and/or providing appropriate reinforcement should be considered.

Where fracture is found in the transition region, measures for reducing the stress concentration due to structural discontinuity should be considered.

BULK CARRIERS	Guidelines for Surveys, Assessment and Repair of Hull Structure	
Part 1	Cargo hold region	Example No.
Area 2	Topside tank structure	1
Detail of damage	Fractures around unstiffened lightening holes and manholes in wash bulkhead	

Sketch of damage

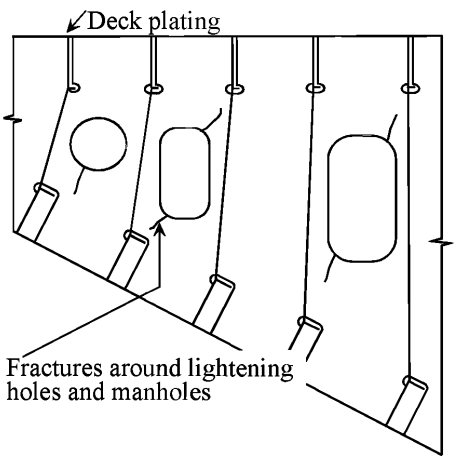

Sketch of repair

Repair A

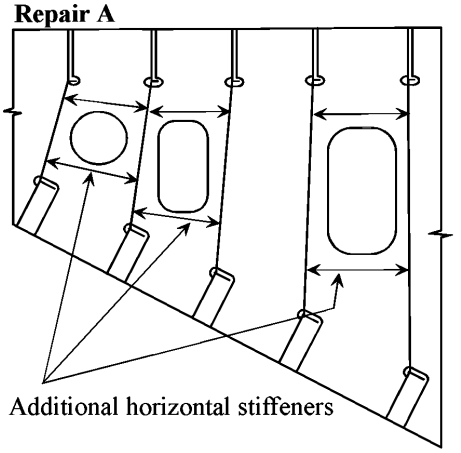

Repair C

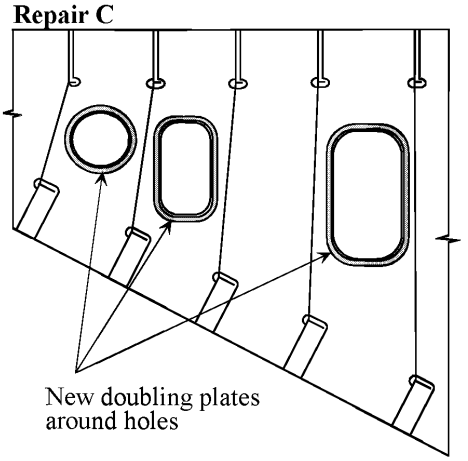

Repair B

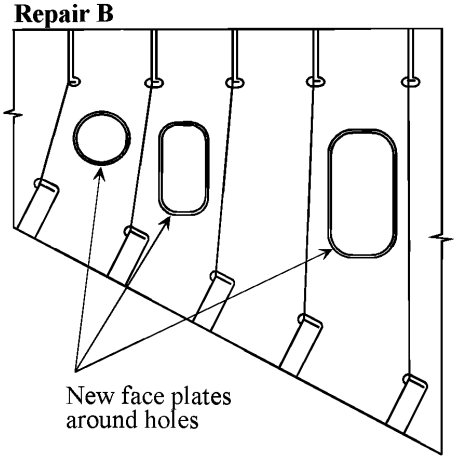

Notes on possible cause of damage

1. General levels of corrosion and presence of stress concentration.

Notes on repairs

1. Corroded/fractured plate should be cropped and renewed with plating of enhanced thickness.
2. Reinforcement should be considered.

BULK CARRIERS	Guidelines for Surveys, Assessment and Repair of Hull Structure	
Part 1	Cargo hold region	Example No.
Area 2	Topside tank structure	2-a
Detail of damage	Thinning and subsequent buckling of web plating in the vicinity of the radii of the opening	

Sketch of damage

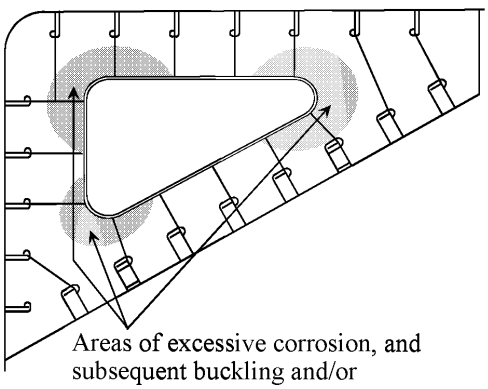

Sketch of repair

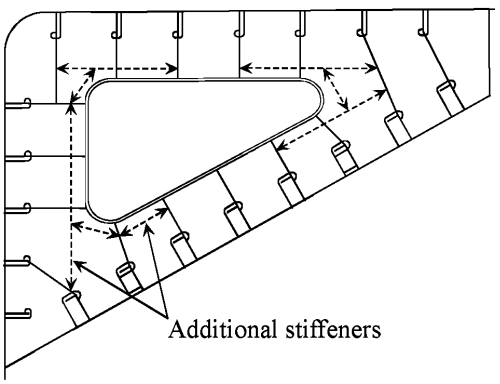

Notes on possible cause of damage

1. Insufficient buckling strength.
2. Corrosion due to stress concentration at corners.

Notes on repairs

1. Buckled plating is to be cropped and parts renewed, if necessary.
2. Additional stiffeners as shown above and/or renewal with plating of increased thickness should be considered.

BULK CARRIERS	Guidelines for Surveys, Assessment and Repair of Hull Structure	
Part 1	Cargo hold region	Example No.
Area 2	Topside tank structure	2-b
Detail of damage	Thinning and subsequent buckling of web plating in the vicinity of the radii of the opening	

Sketch of damage

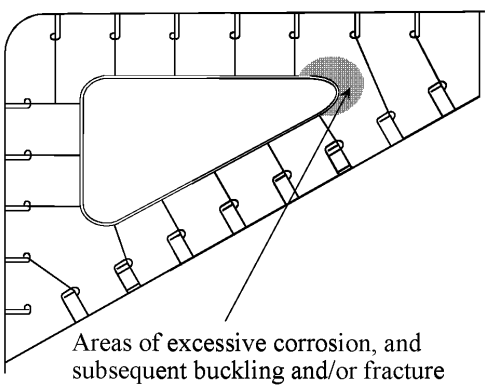

Sketch of repair

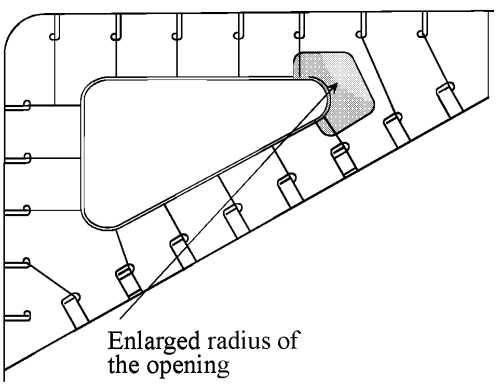

Notes on possible cause of damage

1. Corrosion caused by stress concentration at the corner due to insufficient radius for the opening.

Notes on repairs

1. Corroded/buckled plating is to be cropped and parts renewed with plating of increased thickness and additional stiffeners are preferable to minimize deflection.
2. An attempt should be made to improve the design of the radius if felt necessary.

BULK CARRIERS	Guidelines for Surveys, Assessment and Repair of Hull Structure	
Part 1	**Cargo hold region**	**Example No.**
Area 2	**Topside tank structure**	**2-c**
Detail of damage	Thinning and subsequent buckling of web plating in the vicinity of the radii of the opening	

Sketch of damage

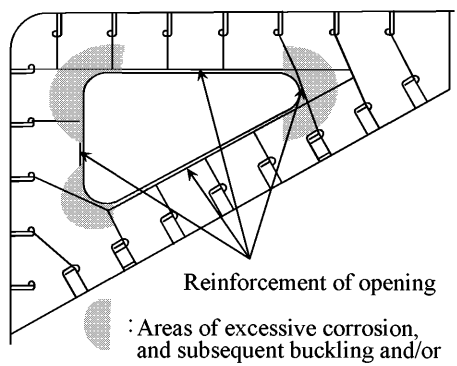

Sketch of repair

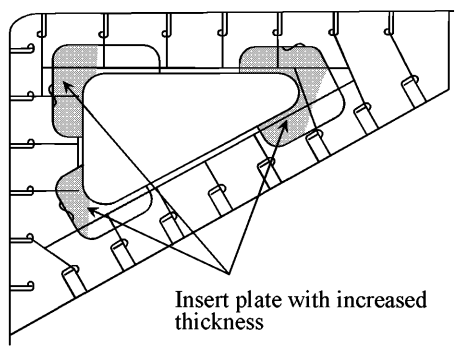

Notes on possible cause of damage

1. Additional stresses at the free edge of transverse web. (In **Example 2-a - 2-c** face plate is provided for the reinforcement of the opening.)

Notes on repairs

1. Corroded/buckled plating is to be cropped and part renewed with plating of increased thickness.

BULK CARRIERS	Guidelines for Surveys, Assessment and Repair of Hull Structure	
Part 1	**Cargo hold region**	**Example No.**
Area 2	**Topside tank structure**	**3**
Detail of damage	Fractures in transverse web at sniped end of stiffener	

Sketch of damage

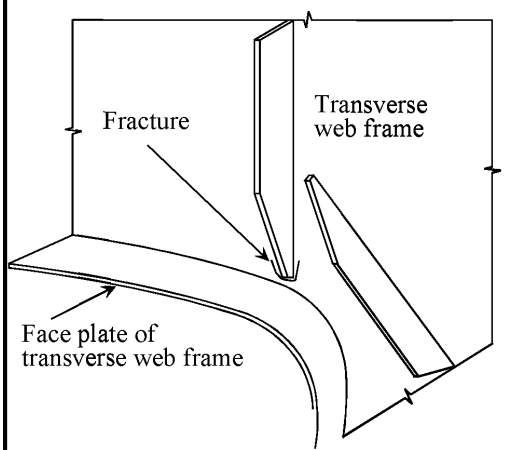

Sketch of repair

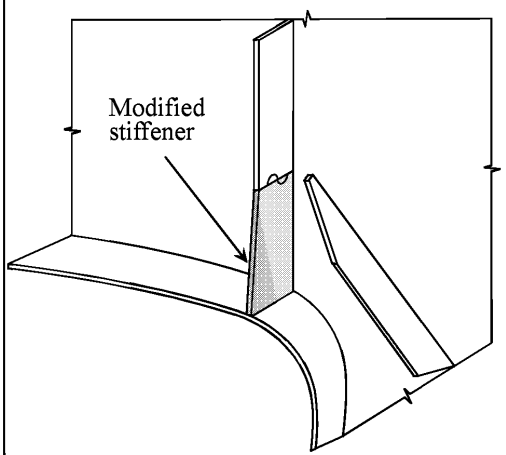

Notes on possible cause of damage

1. Stress concentration.

Notes on repairs

1. Fracture can be veed-out and welded provided the plating is not generally corroded. If necessary, fractured plating should be cropped and renewed.
2. Excessive stress concentration at the end of stiffener should be avoided.

BULK CARRIERS	Guidelines for Surveys, Assessment and Repair of Hull Structure	
Part 1	Cargo hold region	Example No.
Area 2	Topside tank structure	4-a
Detail of damage	Fractures at slots in way of transverse web frame	

Sketch of damage

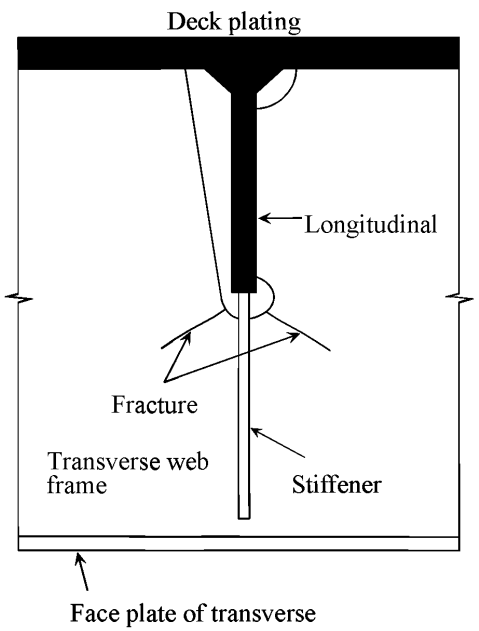

Sketch of repair

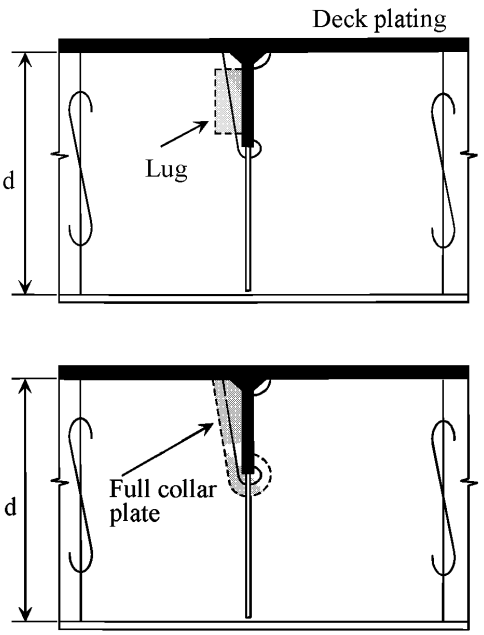

(Note) Full collar plate where the depth of cut-out is more than 0.4 times the depth of web frame (0.4d) and in an areas of high shear stress

Notes on possible cause of damage

1. Damage may be created by local shear stress concentrations due to large cut-outs for notch.
2. Also deficient welds (fillet welds between deck longitudinal and stiffener).

Notes on repairs

1. Crop and part renew the web plating.
2. Close the cut-out by introducing a lug or alternatively fit a full collar plate.

BULK CARRIERS	Guidelines for Surveys, Assessment and Repair of Hull Structure	
Part 1	Cargo hold region	Example No.
Area 2	Topside tank structure	4-b
Detail of damage	Fractures and buckling at slots in way of transverse web frame	

Sketch of damage

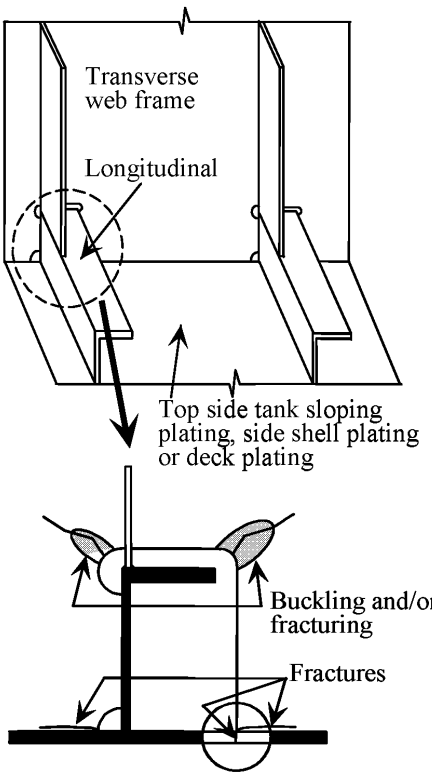

Sketch of repair

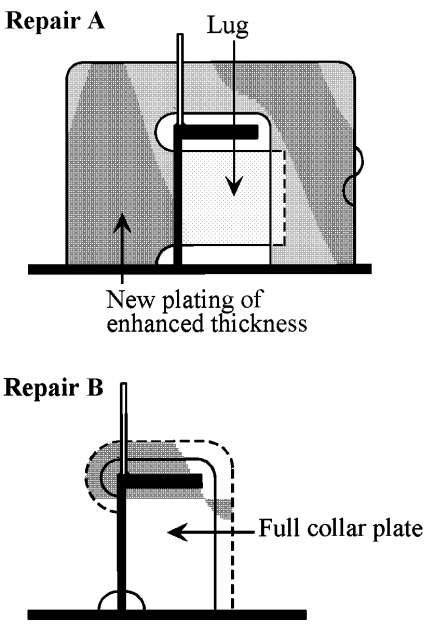

Notes on possible cause of damage

1. Damage can be caused by general levels of corrosion and presence of stress concentration associated with the presence of a cut-out.

Notes on repairs

1. If fractures are significant then crop and part renew the plating otherwise the fracture can be veed-out and welded provided the plating is not generally corroded.
2. **Repair A** Lug should be considered.
3. **Repair B** Full collar plate should be considered where the depth of cut-out is more than 0.4 times the depth of web frame and in an area of high shear stress or the existing lug proves to be ineffective.

BULK CARRIERS	Guidelines for Surveys, Assessment and Repair of Hull Structure	
Part 1	**Cargo hold region**	**Example No.**
Area 2	**Topside tank structure**	**5**
Detail of damage	Fractures in longitudinal at transverse web frame or bulkhead	

Sketch of damage

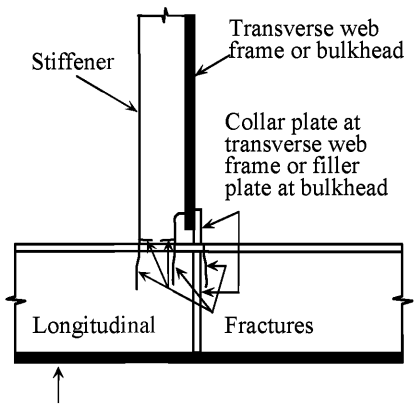

Sketch of repair

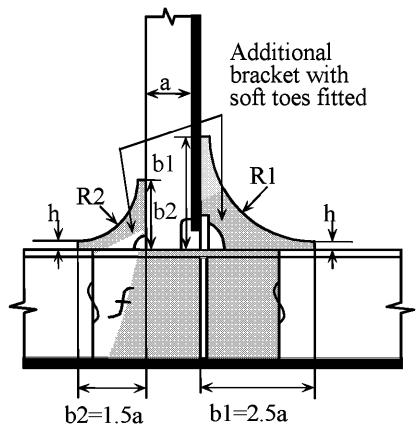

f: Where required, the longitudinal to be cropped and part renewed

1. For a slope at toes max. 1:3, R1=(b1-h)x 1.6 and R2=(b2-h)x 1.6
2. Soft toe bracket to be welded first to longitudinal
3. Scallop in bracket to be as small as possible, recommended max. 35mm
4. If toes of brackets are ground smooth, full penetration welds in way to be provided
5. Maximum length to thickness ratio =50:1 for unstiffened bracket edge
6. Toe height, h, to be as small as possible (10-15mm)

Notes on possible cause of damage

1. Damage can be caused by stress concentrations leading to accelerated fatigue in this region.

Notes on repairs

1. If fracture extends to over one third of the depth of the longitudinal, then crop and part renew. Otherwise the fracture can be veed-out and welded.

BULK CARRIERS	Guidelines for Surveys, Assessment and Repair of Hull Structure	
Part 1	Cargo hold region	Example No.
Area 2	Topside tank structure	6
Detail of damage	Fractures in the lowest longitudinal at transverse web frame	

Sketch of damage

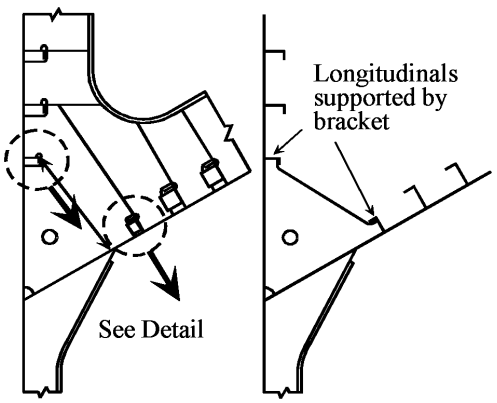

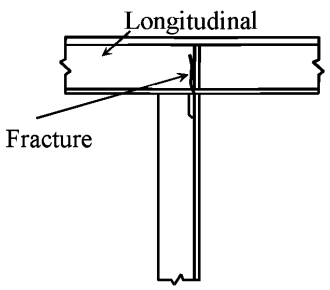

Detail

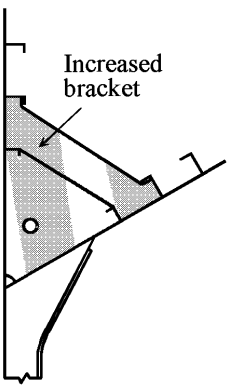

Notes on possible cause of damage

1. Insufficient scantling for torsional rigidity (The lowest longitudinal is usually supported by bracket(s) as shown in the above and smaller scantling may be adopted. However, the lowest longitudinal undergoes torsion from side shell frame through bracket(s) and may suffer fracture.)

Notes on repairs

1. Fractured part to be cropped and renewed.
2. Size of bracket should be increased

BULK CARRIERS	Guidelines for Surveys, Assessment and Repair of Hull Structure	
Part 1	Cargo hold region	Example No.
Area 2	Topside tank structure	7-a
Detail of damage	Fractures in transverse brackets	

Sketch of damage

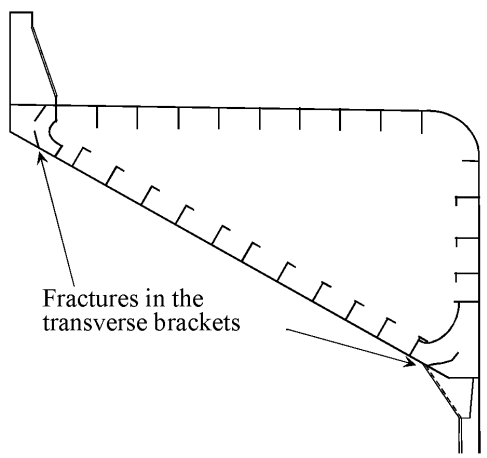

Sketch of repair

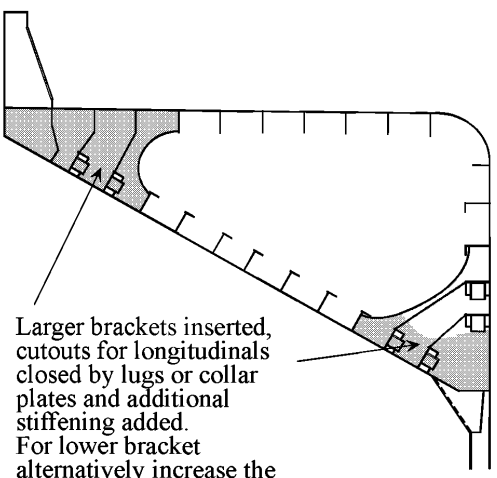

Notes on possible cause of damage

1. General levels of corrosion and presence of stress concentrations.
2. Misalignment of the brackets with adjoining structure, e.g. side shell frame brackets and/or coaming brackets.
3. High shear stresses due to insufficient bracket size.
4. Inadvertent overloading.

Notes on repairs

1. If the damage is caused by misalignment with the side shell frame brackets or the hatch coaming brackets the misalignment is to be rectified and the replacement by larger brackets incorporated only if considered necessary.

BULK CARRIERS	Guidelines for Surveys, Assessment and Repair of Hull Structure	
Part 1	Cargo hold region	Example No.
Area 2	Topside tank structure	7-b
Detail of damage	Fractures in transverse bracket	

Sketch of damage

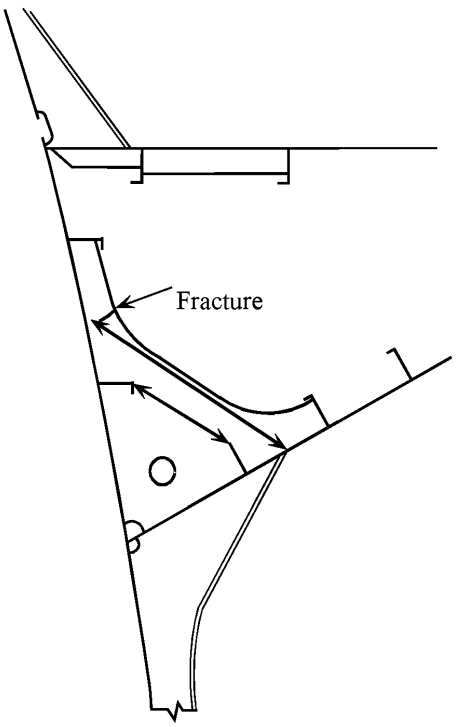

Sketch of repair

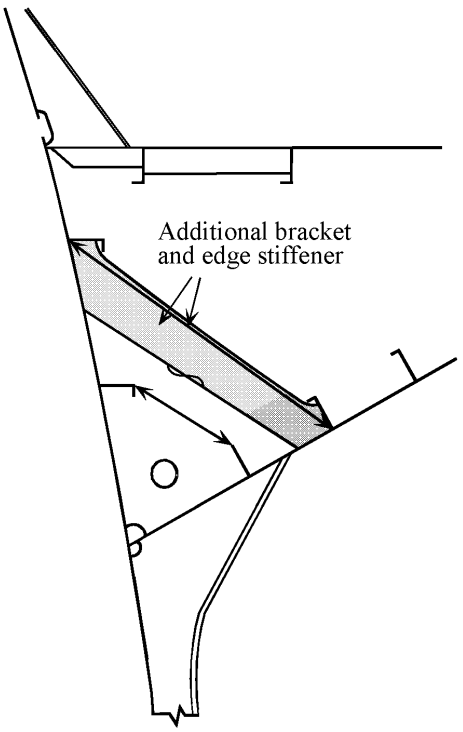

Notes on possible cause of damage

1. Insufficient strength.
2. Corrosion.

Notes on repairs

1. Fractured part to be cropped and renewed.
2. If the fractured part is free from corrosion, increased size and thickness should be considered. Partial renewal of the bracket may be accepted depending on the nature of the fracture.

BULK CARRIERS	Guidelines for Surveys, Assessment and Repair of Hull Structure	
Part 1	Cargo hold region	Example No.
Area 2	Topside tank structure	7-c
Detail of damage	Fractures at toes of transverse bracket	

Sketch of damage

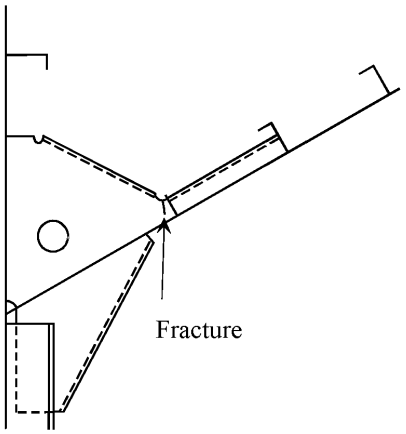

Sketch of repair

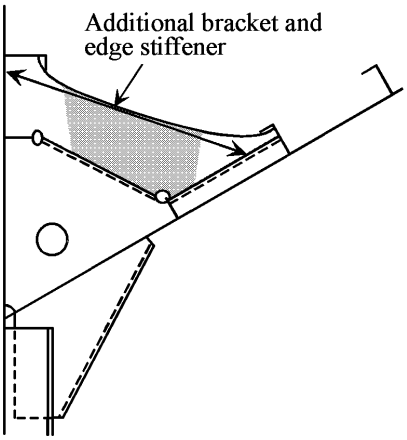

Notes on possible cause of damage

1. Stress concentration due to the shape of the bracket.

Notes on repairs

1. Cracked weld to be veed-out and rewelded.

BULK CARRIERS	Guidelines for Surveys, Assessment and Repair of Hull Structure	
Part 1	Cargo hold region	Example No.
Area 2	Topside tank structure	8
Detail of damage	Fractures in sloping plating and vertical strake initiated from the connection of topside tank to hatch end beam	

Sketch of damage

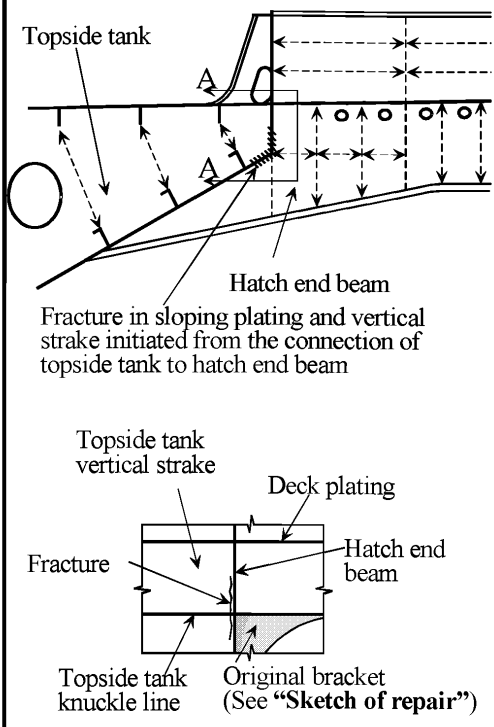

View A-A

Sketch of repair

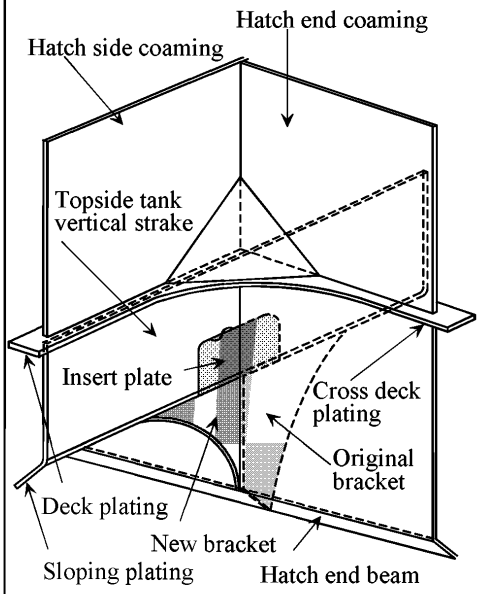

Notes on possible cause of damage

1. Stress concentration at the connection of hatch end beam to topside tank.

Notes on repairs

1. Fractured part to be cropped and renewed with increased thickness.
2. Additional bracket should be considered for reinforcement.

BULK CARRIERS	Guidelines for Surveys, Assessment and Repair of Hull Structure	
Part 1	**Cargo hold region**	**Example No.**
Area 2	**Topside tank structure**	**9**
Detail of damage	Fractures in sloping plating at knuckle	

Sketch of damage

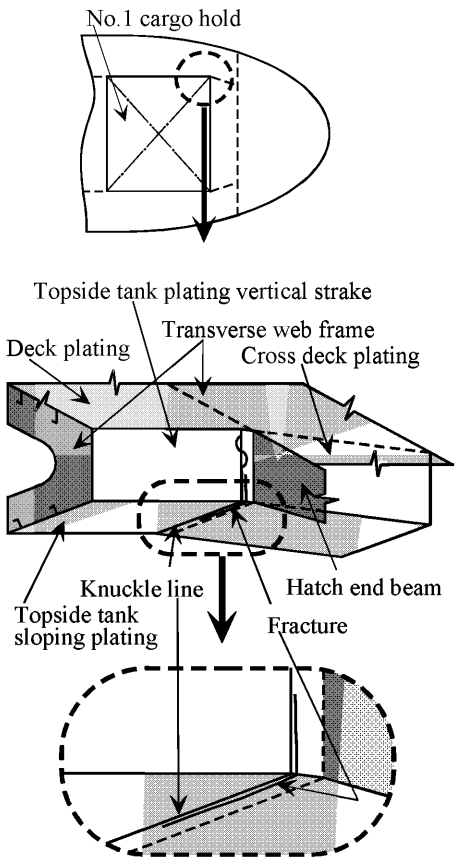

Sketch of repair

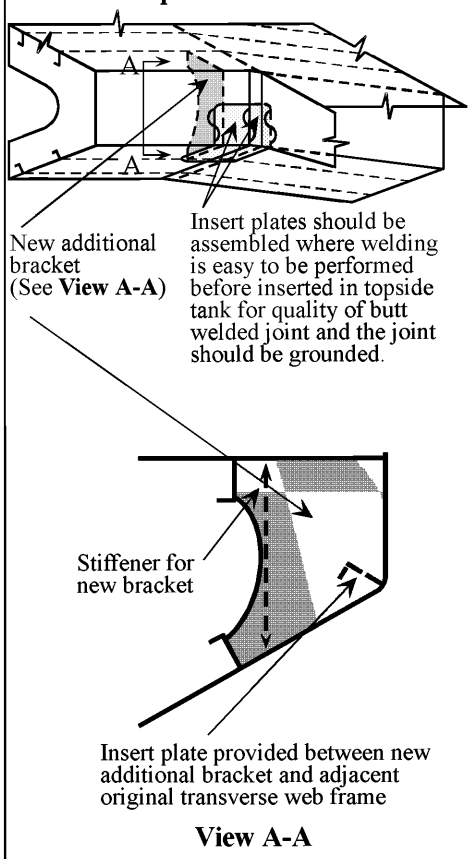

Notes on possible cause of damage

1. Insufficient strength.
2. Additional stress induced by knuckle.

Notes on repairs

1. Knuckle part should be reinforced appropriately.

BULK CARRIERS	Guidelines for Surveys, Assessment and Repair of Hull Structure	
Part 1	Cargo hold region	Example No.
Area 2	Topside tank structure	10
Detail of damage	Fractures in way of collision bulkhead at intersection with topside tank structure in foremost cargo hold	

Sketch of damage

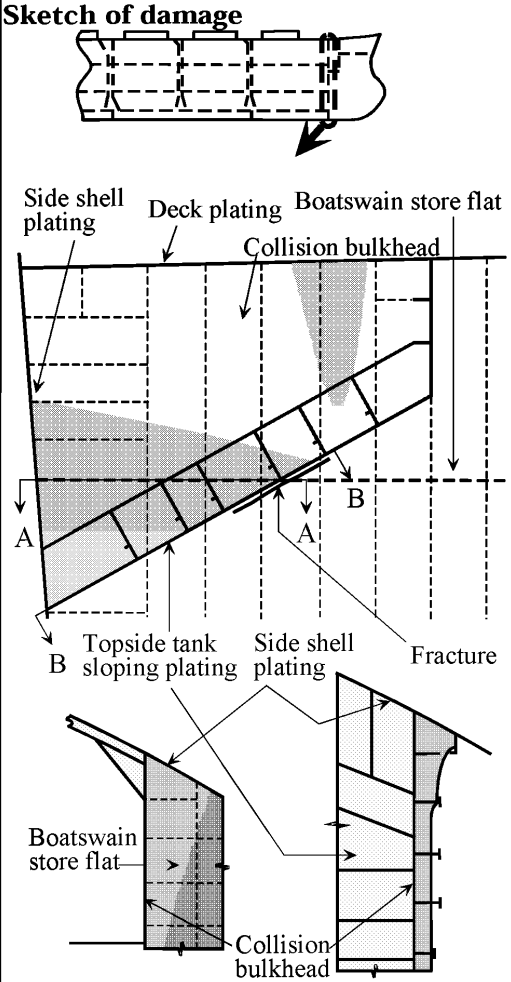

Sketch of repair

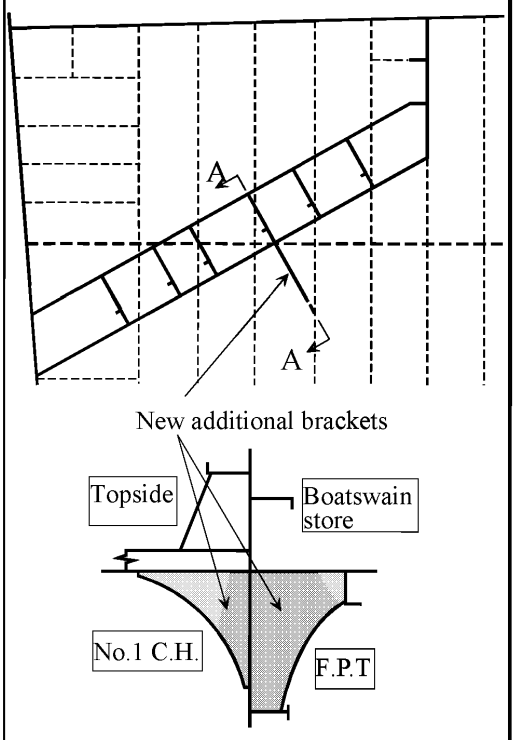

Notes on possible cause of damage

1. Damage caused by hard spot at intersection of the topside tank sloping plating and boatswain's store deck plating (fore peak tank top plating).

Notes on repairs

1. Fractured plates to be cropped and renewed.
2. Stress concentration should be considered (Brackets were fitted on both sides for reinforcement).

BULK CARRIERS	Guidelines for Surveys, Assessment and Repair of Hull Structure	
Part 1	Cargo hold region	Example No.
Area 2	Topside tank structure	11
Detail of damage	Fractures in way of engine room forward bulkhead at intersection with topside tank structure in aftermost cargo hold	

Sketch of damage

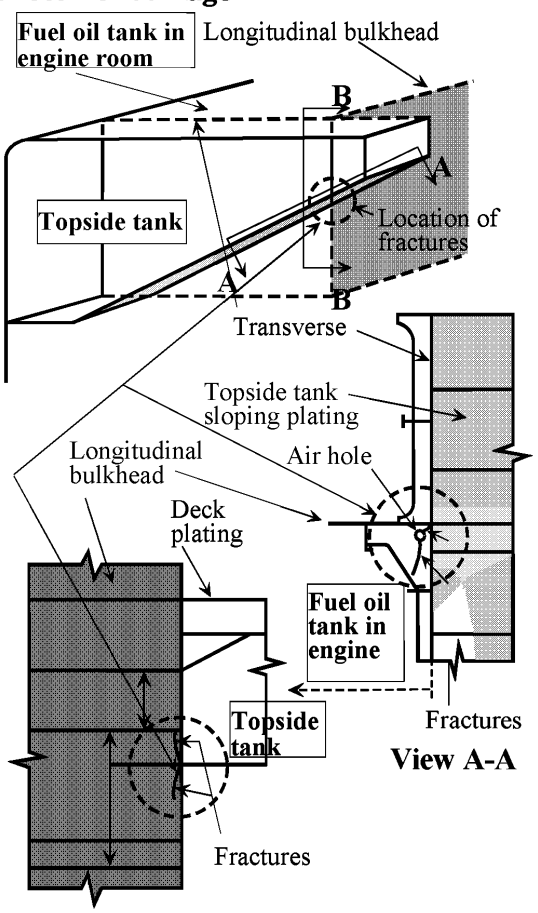

Sketch of repair

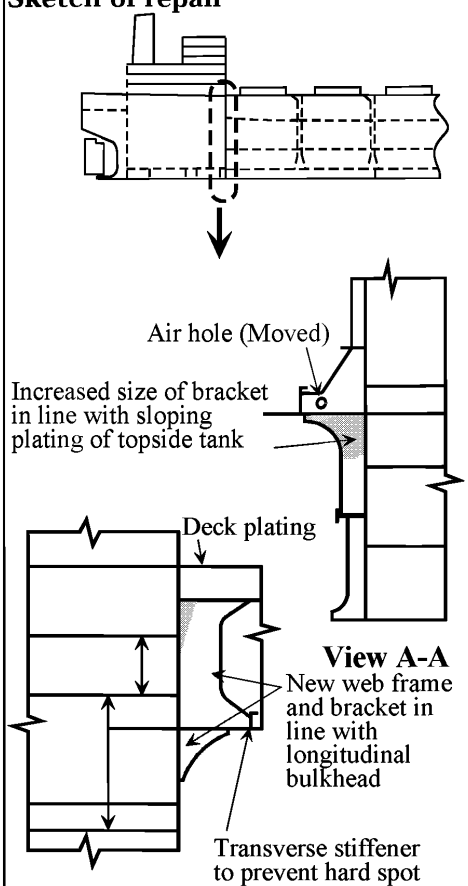

Notes on possible cause of damage

1. Damage caused by hard spot at intersection of the topside tank sloping plating and longitudinal bulkhead of the fuel oil tank in engine room.

Notes on repairs

1. Fractured plates to be cropped and renewed as necessary and reinforcement fitted as shown shaded above. The position of the air-hole to be relocated.

Area 3 Cargo hold side structure

Contents

1 General

2 What to look for - Internal inspection
2.1 Material wastage
2.2 Deformations
2.3 Fractures

3 What to look for - External inspection
3.1 Material wastage
3.2 Deformations
3.3 Fractures

4 General comments on repair
4.1 Material wastage
4.2 Deformations
4.3 Fractures

Figures and/or Photographs - Area 3	
No.	**Title**
Figure 1	Side shell frame - Potential problems areas
Figure 2	Damages to side shell frame - Potential problem areas
Figure 3	Representative gauging locations on the side shell frame - Potential problem areas
Figure 4	Transition regions - Potential problem areas
Figure 5	Uniform corrosion of side shell frame
Photograph 1	Collapsed side shell frames
Photograph 2	Missing side shell structure

Examples of structural detail failures and repairs - Area 3	
Example No.	**Title**
1-a	Fractures in brackets at termination of frame
1-b	Fractures in side shell frame at bracket's toe
2	Fractures in side shell frame at bracket's toe
3	Fractures in side shell frame/lower bracket and side shell plating near hopper
4	Deformation of side shell plating
5	Adverse effect of corrosion on the frame of forward/afterward hold

Examples of structural detail failures and repairs - Area 3	
Example No.	**Title**
6	Buckling and fractures of side shell plating in foremost cargo hold
7	Fractures at the supporting brackets in way of the collision bulkhead
8	Fractures at the supporting brackets in way of the collision bulkhead with no side shell panting stringer in hold
9	Fractures in way of horizontal diaphragm in the connecting trunk between topside tank and hopper double bottom tank, on after side of collision bulkhead
10	Fractures in way of continuation/extension bracket in aftermost hold at the engine room bulkhead

1 General

1.1 In addition to contributing to the shear strength of the hull girder, the side shell forms the external boundary of a cargo hold and is naturally the first line of defense against ingress/leakage of sea water when the ship hull is subjected to wave and other dynamic loading in heavy weather. The integrity of the side structure is of prime importance to the safety of the ship and this warrants very careful attention during survey and inspection.

1.2 The ship side structure is prone to damage caused by contact with the quay during berthing and impacts of cargo and cargo handling equipment during loading and discharging operations.

1.3 The marine environment in association with the handling and characteristics of certain cargoes (e.g. wet timber loaded from sea water and certain types of coal) may result in deterioration of coating and severe corrosion of plating and stiffeners. This situation makes the structure more vulnerable when exposed to heavy weather.

1.4 Bulk carriers carry various cargoes and one of the common cargoes is coal, especially for large bulk carriers. Certain types of coal contains sulphur impurities and when they react with water produce sulfuric acid which can cause severe corrosion to the structure if suitable coating is not applied and properly maintained.

1.5 The structure at the transition regions at the fore and aft ends of the ship are subject to stress concentrations due to structural discontinuities. The side shell plating at the transition regions is also subject to panting. The lack of continuity of the longitudinal structure, and the increased slenderness and flexibility of the side structure, makes the structure at the transition regions more prone to fracture damages.

1.6 A summary of potential problem areas is shown in **Figures 1** - **4**. Examples of failure and damaged ship side structure are illustrated in **Photographs 1**- **2**.

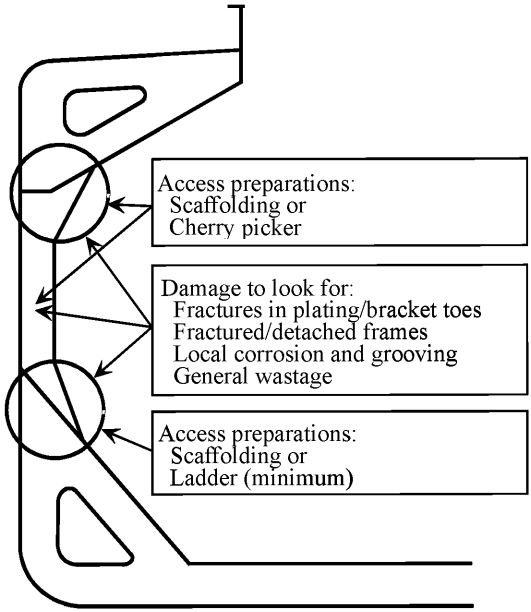

Figure 1
Side shell frame - Potential problem areas

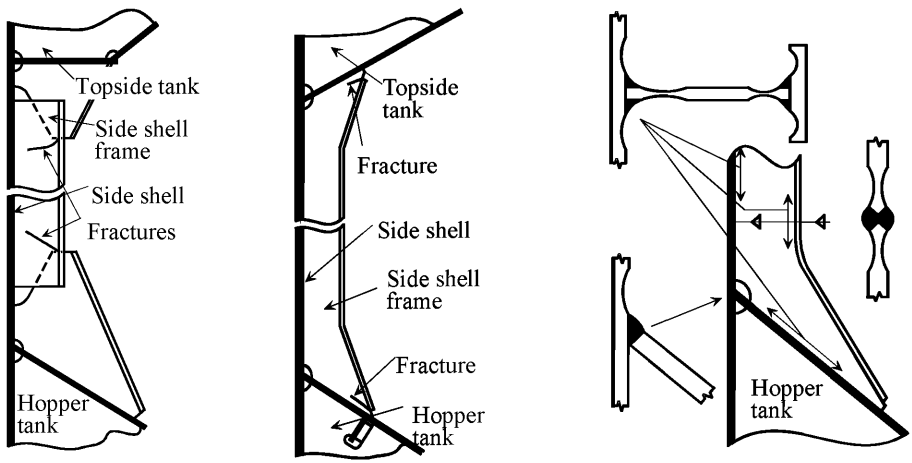

(a) Separate bracket configuration **(b) Integral bracket configuration** **(c) Examples of grooving**

Figure 2 Damages to side shell frame - Potential problem areas

(Note) The type of bracket configuration used will, to a large extent, dictate the location and extent of fracture. Where separate brackets are employed, the fracture location is normally at the bracket toe position on the frames, whereas with integral brackets the location is at the toe position on the hopper and topside tank.

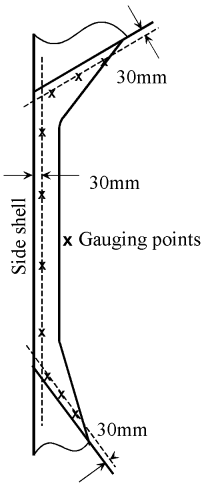

Figure 3
Representative gauging locations on the side shell frame - Potential problem areas

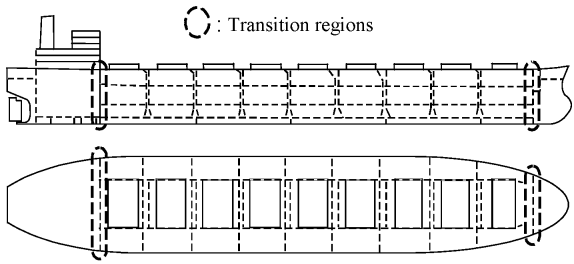

Figure 4 Transition regions - Potential problem area



Photograph 1 **Collapsed side shell frames (See Example 4)**



Photograph 2 **Missing side shell structure (See Examples 4 and 5)**

2 What to look for - Internal inspection

2.1 Material wastage

2.1.1 Attention is drawn to the fact that side shell frames may be significantly weakened by loss of thickness although diminution and deformations may not be apparent. Inspection should be made after the removal of any scale or rust deposit. Thickness measurements may be necessary, particularly if the corrosion is smooth and uniform, to determine the condition of the structure (See **Figure 5**).

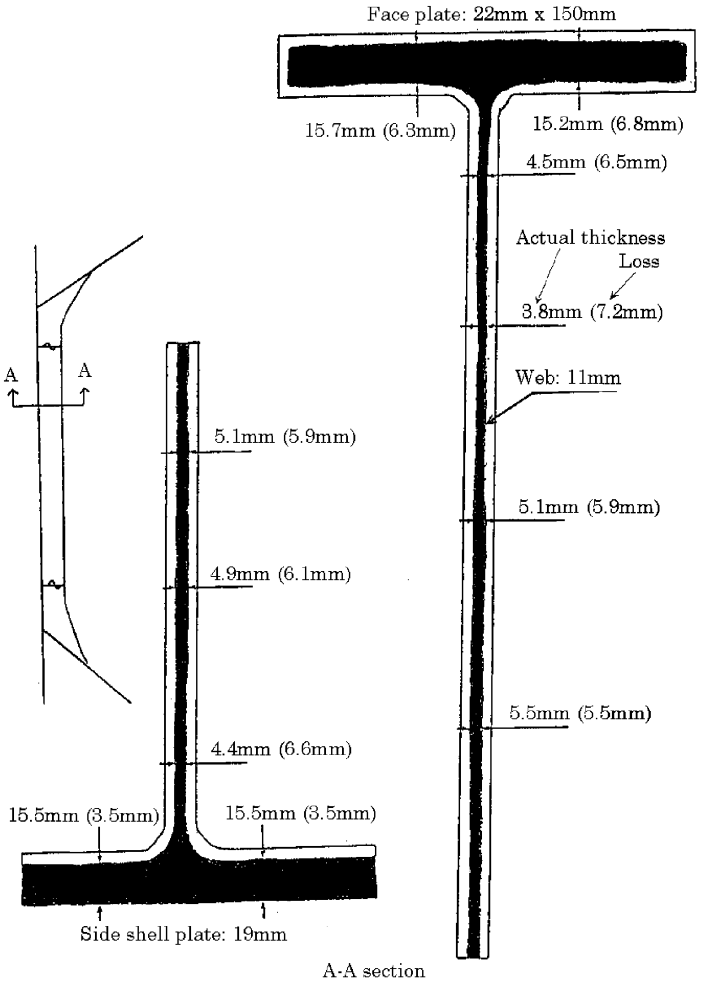

Figure 5 Uniform corrosion of side shell frame

2.1.2 It is not unusual to find highly localised corrosion on uncoated side shell frames and their end connections. The loss in the thickness is normally greater close to the side shell plating rather than near the faceplate, and consequently representative thickness measurements should be in that area (See **Figure 3**). This situation, if not remedied, can result in loss of support to the shell plating and hence large inboard deflections. In many cases such deflections of the side shell plating can generate fractures in the shell plating and fracturing and buckling of the frame web plates and eventually result in detachment of the end brackets from the hopper tank.

2.1.3 Heavy wastage and possible grooving of the framing in the forward/aft hold, where side

shell plating is oblique to frames, may result in fracture and buckling of the shell plating as shown in **Example 5**.

2.1.4 Pitting corrosion may be found under coating blisters which need to be removed before inspection.
It should be noted that the middle part of a frame may be wasted even if the upper and / or lower parts of the frame are not.
The following should be considered (and may be included as a surveyor's checklist):

- Hold Frame scantling drawings for each hold and allowable diminution level
- Repair history of Hold Frames
- Previous thickness measurement reports.
- Diminution of Hold Frames would normally be equal or greater than that of transverse cargo hold bulkheads.
- Note history of cargoes carried, especially that of coal or similar corrosive cargo.
- Record of any coating previously applied.
- Safe means of survey access (staging / cherry picker / portable ladder etc.)

Visual examination should take account of the following:

- The diminution of the face plate can be an indication of diminution level on the webs.
- Thickness of the Web may be estimated from edge condition of scallops.
- Fillet welding between Web and Shell plate and heat affected zone
- Fillet welding between Web and Face plate and heat affected zone
- Fillet welding between Upper Bracket and Top side tank, between Lower Bracket and Bilge Hopper Tank and heat affected zone
- Scallop at Upper and Lower part of Web

Experience with Bulk Carriers 100,000 dwt and above has shown that side shell frames in No.3 hold are more susceptible to damages. Therefore it is recommended that side shell frames in this hold are specially considered.

2.2 Deformations

2.2.1 It is normally to be expected that the lower region of the frames will receive some level of damage during operational procedures, e.g. when unloading with the aid of grabs and bulldozers or during loading of logs. This can range from damage of the side frame end bracket face plates to large physical deformations of a number of frames and in some cases can initiate fractures.

These individual frames and frame brackets, if rendered ineffective, will place additional load on the adjacent frames and failure by the "domino effect" can in many cases extend over the side shell of a complete hold.

2.3 Fractures

2.3.1 Fractures are more evident at the toes of the upper and lower bracket(s) or at the connections between brackets and frames. In most cases the fractures may be attributed to stress concentrations and stress variations created, in the main, by loads from the seaway. The stress concentrations can be a result of poor detail design and/or bad workmanship. Localised fatigue fracturing, possibly in association with localised corrosion, may be difficult to detect and it is stressed that the areas in question should receive close attention during periodical surveys.

2.3.2 Fractures are more often found at the boundary structure of a cargo/ballast hold than other cargo holds. This area should be subjected to close-up examination.

2.3.3 Fractures in shell plating and supporting or continuation/extension brackets at collision bulkhead and engine room forward bulkhead are frequently found by close-up examination.

3 What to look for – External inspection

3.1 Material wastage

3.1.1 The general condition with regard to wastage of the ship's sides may be observed by visual inspection from the quay side of the area above the waterline. Special attention should be paid to areas where the painting has deteriorated.

3.2 Deformations

3.2.1 The side shell should be carefully inspected with respect to possible deformations. The side shell below water line can usually only be inspected when the ship is dry docked. Therefore special attention with respect to possible deformations should be paid during dry-docking. When deformation of the shell plating is found, the area should also be inspected internally since even a small deformation may indicate serious damage to the internal structure.

3.2.2 Side shell plating in foremost cargo hold may suffer buckling. Since the shell plating in fore body has curvature in longitudinal direction due to the slenderness, external loads, such as static and dynamic water pressure cause compressive stress in side shell. Therefore the ships of which side shell plating is high tensile steel or has become thin due to corrosion may suffer buckling resulting in fracture along collision bulkhead or side shell frames.

3.3 Fractures

3.3.1 Fractures in the shell plating above and below the water line in way of ballast tanks may be detected during dry-docking as wet area in contrast to otherwise dry shell plating.

4 General comments on repair

4.1 Material wastage

4.1.1 In general, where part of the hold framing and/or associated end brackets have deteriorated to the permissible minimum thickness level, the normal practice is to crop and renew the area affected. However, if the remaining section of the frames/brackets marginally remain within the allowable limit, surveyors should request that affected frames and associated end brackets be renewed. Alignment of end brackets with the structure inside hopper tank or topside tank is to be ensured. It is recommended that repaired areas be coated.

4.1.2 If pitting intensity is lower than 15% in area (see **Figure 6**), pitting greater than ¼ of the original thickness can be welded flush with the original surface.
If deep pits are clustered together or remaining thickness is less than 6 mm, the plate should be renewed by plate inserting instead of repairing by welding.

4.2 Deformations

4.2.1 Depending on the extent of the deformation, the structure should be restored to its original shape and position either by fairing in place or by cropping and renewing the affected structure.

4.3 Fractures

4.3.1 Because of the interdependence of structural components it is important that all fractures and other significant damage to the side shell, frames and their end brackets, however localised, are repaired.

4.3.2 Fractured part of supporting brackets and continuation/extension brackets at collision bulkhead, deep tank bulkheads, and engine room bulkhead are to be part renewed with consideration given to the modification of the shape and possible extension of the brackets to reduce stress concentration. Affected shell plating in way of the damaged brackets should be cropped and renewed.

4.3.3 Repair of fractures at the boundary of a cargo hold should be carefully considered, taking into account necessary structural modification, enhanced scantlings and material, to prevent recurrence of the fractures.

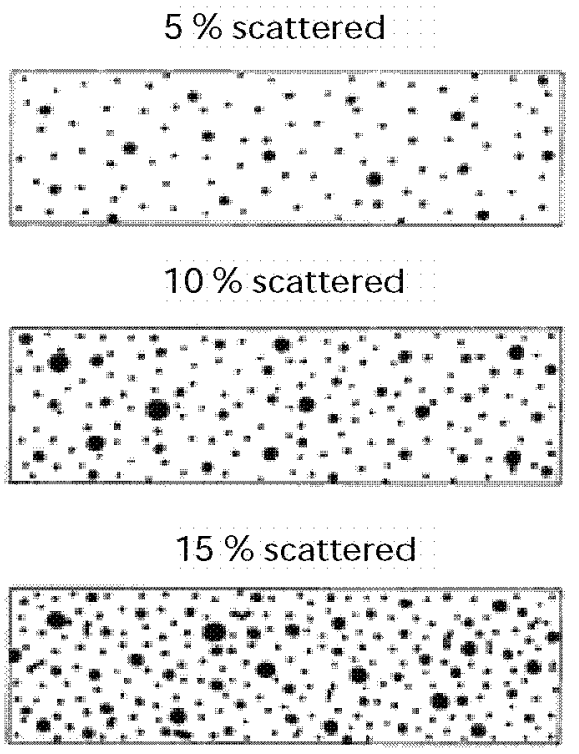

Figure 6 Pitting intensity diagrams (from 5% to 15% intensity)

BULK CARRIERS	Guidelines for Surveys, Assessment and Repair of Hull Structure	
Part 1	Cargo hold region	Example No.
Area 3	Cargo hold side structure	1-a
Detail of damage	Fractures in brackets at termination of frame	

Sketch of damage

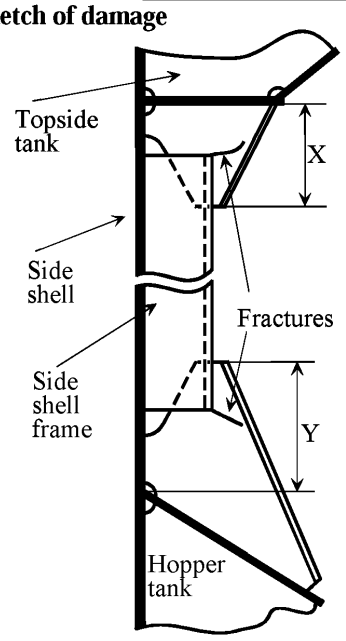

Separate bracket configuration

Sketch of repair

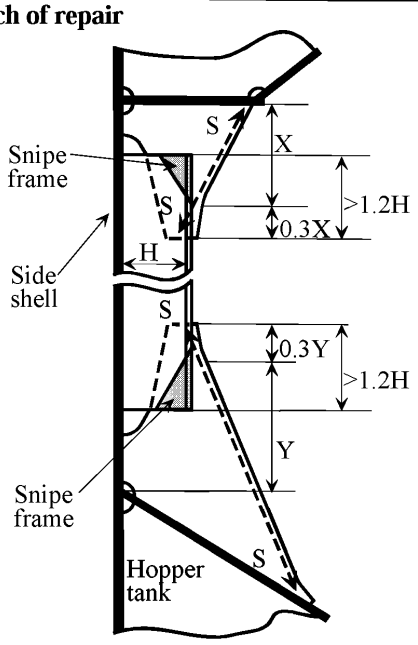

S=Snipped end

Notes on possible cause of damage

1. This type of damage is caused due to stress concentration.

Notes on repairs

1. For small fractures, e. g. hairline fractures, the fracture can be veed-out, ground, examined by NDT for fractures, and rewelded.
2. For larger/significant fractures consideration is to be given to cropping and partly renewing/ renewing the frame brackets. If renewing the brackets, end of frames can be sniped to soften them.
3. If felt prudent, soft toes are to be incorporated at the boundaries of the bracket to the hopper plating.
4. Attention to be given to the structure in wing tanks in way of the extended bracket arm. i.e. reinforcement provided in line with the bracket.

BULK CARRIERS	Guidelines for Surveys, Assessment and Repair of Hull Structure	
Part 1	Cargo hold region	Example No.
Area 3	Cargo hold side structure	1-b
Detail of damage	Fractures in side shell frame at bracket's toe	

Sketch of damage

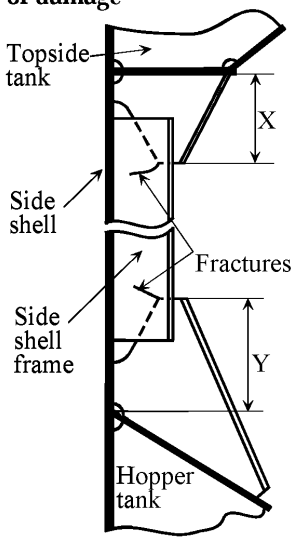

Separate bracket configuration

Sketch of repair

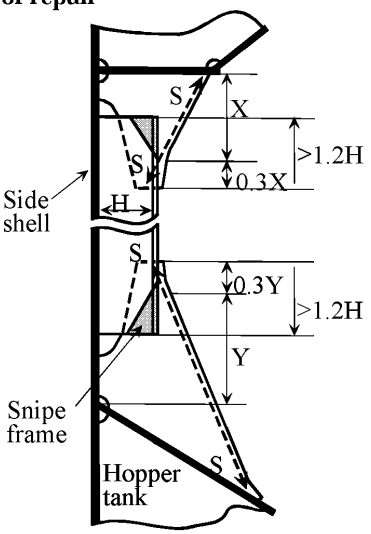

S=Snipped end

Notes on possible cause of damage

1. This type of damage is caused due to stress concentration.

Notes on repairs

1. For small fractures, e. g. hairline fractures, the fracture can be veed-out, welded up, ground, examined by NDT for fractures, and rewelded.
2. For larger/significant fractures consideration is to be given to cropping and partly renewing/ renewing the frame brackets. If renewing the brackets, end of frames can be sniped to soften them.
3. If felt prudent, soft toes are to be incorporated at the boundaries of the bracket to the hopper plating.
4. Attention to be given to the structure in wing tanks in way of the extended bracket arm. i.e. reinforcement provided in line with the bracket.

BULK CARRIERS	Guidelines for Surveys, Assessment and Repair of Hull Structure	
Part 1	Cargo hold region	Example No.
Area 3	Cargo hold side structure	2
Detail of damage	Fractures in side shell frame at bracket's toe	

Sketch of damage

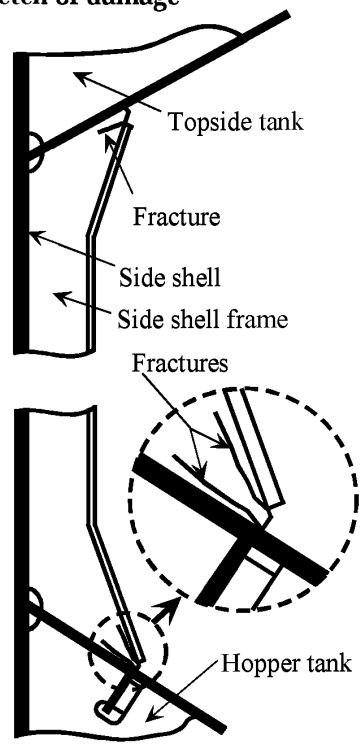

Sketch of repair

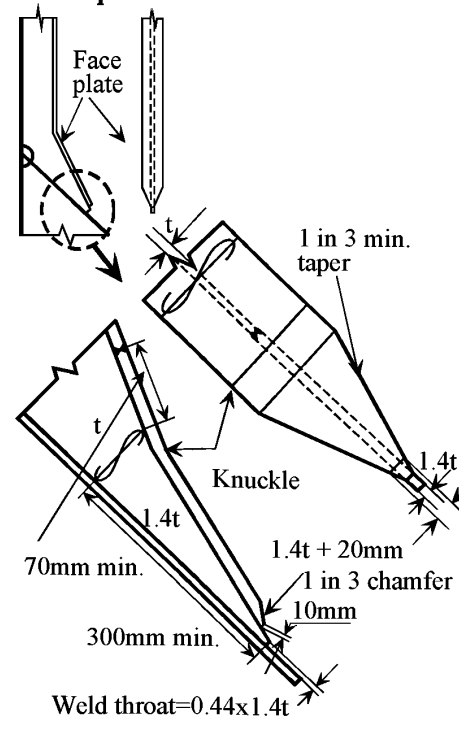

Notes on possible cause of damage

1. This type of damage is caused due to stress concentration.

Notes on repairs

1. Repair is to incorporate a design similar to the one shown on the sketch and in addition:-
   - 1.1. The arm of the bracket along the hopper/ topside plating should be increased by altering the angle of the bracket face plate. A face plate taper of 1 in 3 should be arranged.
   - 1.2. The local thickness of the bracket web plating over the length of the new face plate taper should be increased by about 40% above that originally fitted.
   - 1.3. The face plate thickness should be chamfered 1 in 3 to a thickness at its extremity.
   - 1.4. Welding of the new bracket toe should be based on a weld factor of 0.44 applied to the increased thickness.
2. Attention to be given to the structure in wing tanks in way of the extended bracket arm. i.e. reinforcement provided in line with the bracket.

BULK CARRIERS	Guidelines for Surveys, Assessment and Repair of Hull Structure	
Part 1	Cargo hold region	Example No.
Area 3	Cargo hold side structure	3
Detail of damage	Fractures in side shell frame/lower bracket and side shell plating near hopper	

Sketch of damage

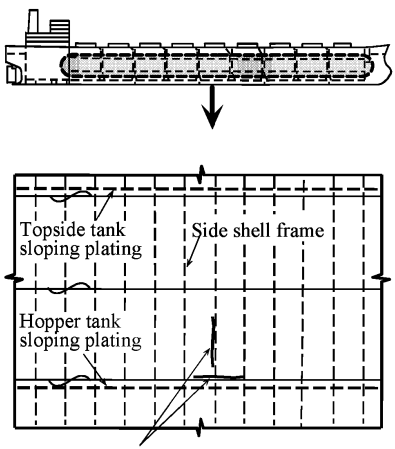

Sketch of repair

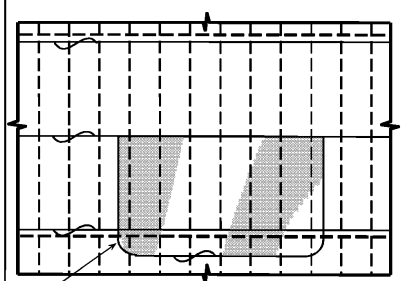

Notes on possible cause of damage

1. Heavy corrosion (grooving). Refer to **Figure 2 (c)**.

Notes on repairs

1. Sketch of repair applies when damage extends over several frames.
2. Isolated fractures may be repaired by veeing-out and rewelding.
3. Isolated cases of grooving may be repaired by build up of welding.

BULK CARRIERS	Guidelines for Surveys, Assessment and Repair of Hull Structure	
Part 1	Cargo hold region	Example No.
Area 3	Cargo hold side structure	4
Detail of damage	Deformation of side shell plating	

Sketch of damage

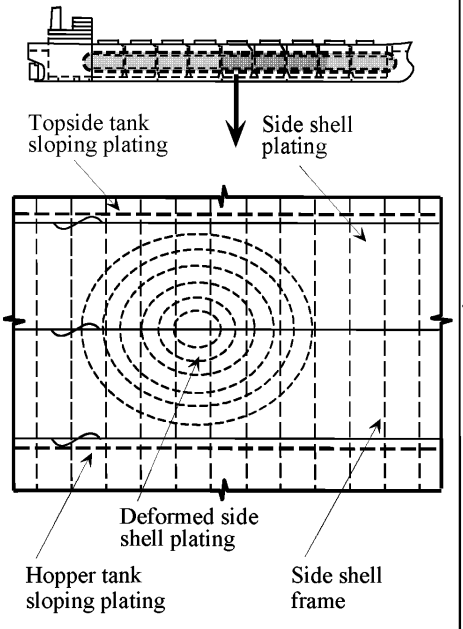

Sketch of repair

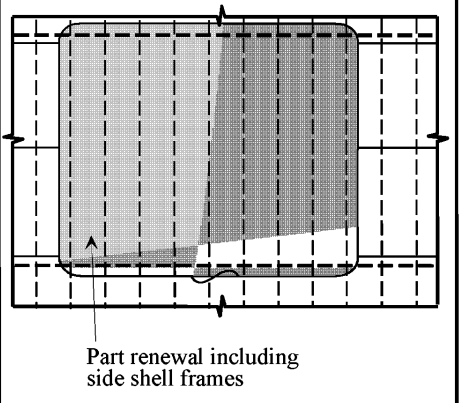

Notes on possible cause of damage

1. Insufficient stiffness of side shell frames due to buckling and/or detachment of side shell frames due to corrosion.
2. Heavy weather.

Notes on repairs

1. Deformed side shell plating including side shell frames should be cropped and renewed.

BULK CARRIERS	Guidelines for Surveys, Assessment and Repair of Hull Structure	
Part 1	Cargo hold region	Example No.
Area 3	Cargo hold side structure	5
Detail of damage	Adverse effect of corrosion on the frame of forward/afterward hold	

Sketch of damage

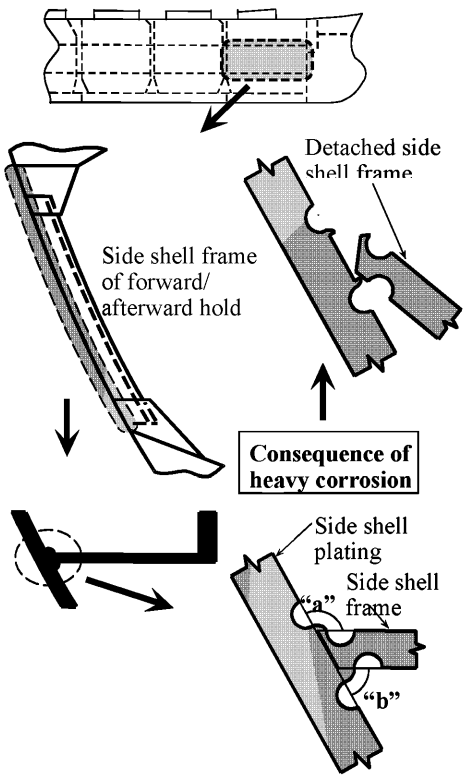

Sketch of repair

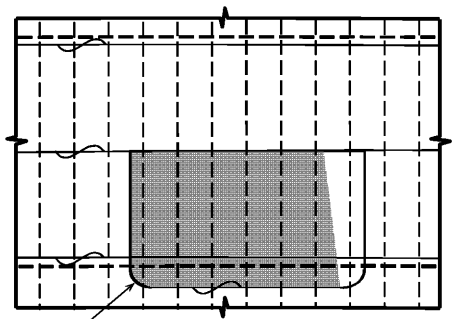

1. Part renewal including side shell frames and hopper plating, as found necessary
2. Deep penetration welding at the connections of side shell frames to side shell plating

Notes on possible cause of damage

1. Heavy corrosion (grooving) of side shell frame along side shell plating and difference of throat thickness "**a**" from "**b**". (Since original throat thickness of "**a**" is usually smaller than that of "**b**", if same welding procedure is applied, the same corrosion has a more severe effect on "**a**", and may cause collapse and/or detachment of side shell frame.)

Notes on repairs

1. Sketch of repair applies when damage extends over several frames.
2. Isolated fractures may be repaired by veeing-out and rewelding.
3. Isolated cases of grooving may be repaired by build up of welding.

BULK CARRIERS	Guidelines for Surveys, Assessment and Repair of Hull Structure	
Part 1	Cargo hold region	Example No.
Area 3	Cargo hold side structure	6
Detail of damage	Buckling and fractures of side shell plating in foremost cargo hold	

Sketch of damage

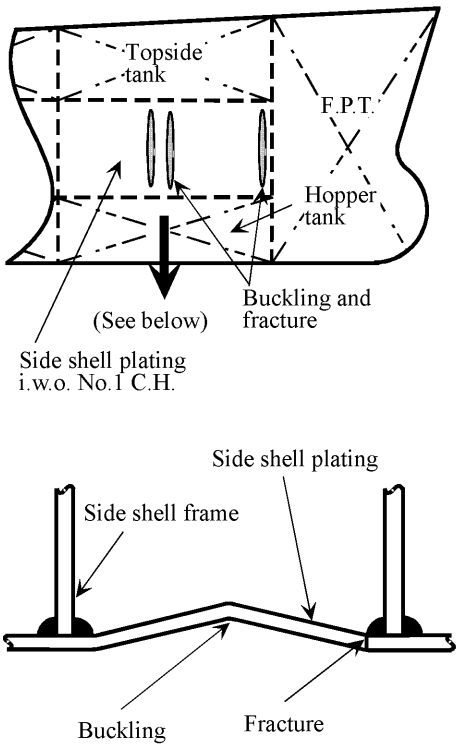

Sketch of repair

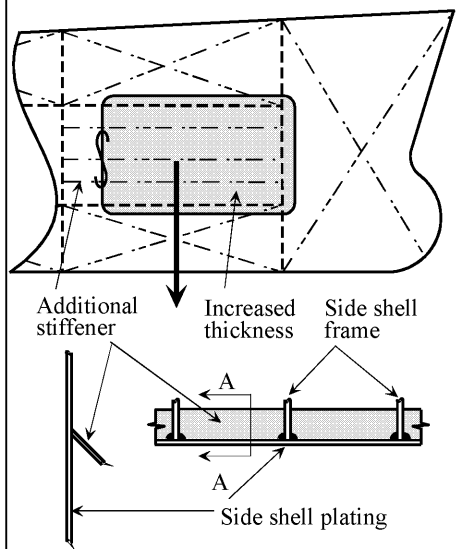

View A-A

Notes on possible cause of damage

1. Heavy weather.
2. Insufficient buckling strength due to high tensile steel or heavy uniform corrosion.
3. Inadequate transition structure.

Notes on repairs

1. Buckled/fractured side shell plating is to be cropped and renewed.
2. Reinforcement by thicker side shell plating and/or additional stiffeners should be considered.

BULK CARRIERS	Guidelines for Surveys, Assessment and Repair of Hull Structure	
Part 1	Cargo hold region	Example No.
Area 3	Cargo hold side structure	7
Detail of damage	Fractures at the supporting brackets in way of the collision bulkhead	

Sketch of damage

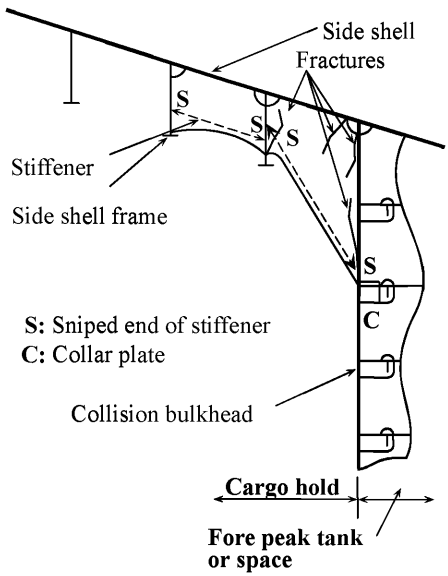

Sketch of repair

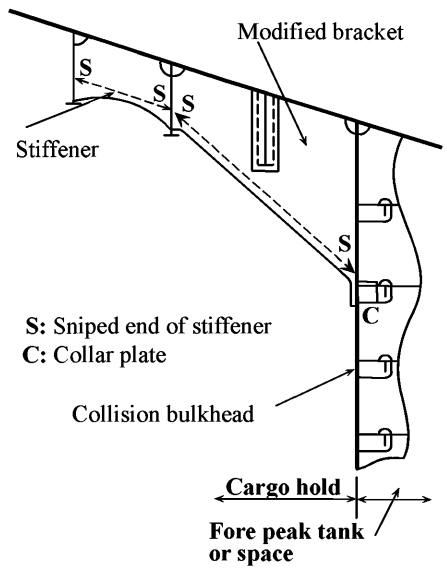

Notes on possible cause of damage

1. Insufficient bracket size resulting in high stress due to load cantilevered from side frame.
2. Stress concentration at toe of bracket and misalignment between bracket and stringer in fore peak tank or space.

Notes on repairs

1. The extended bracket arm connection to the collision bulkhead is to have a soft toe, and any cut-outs for stiffeners in the fore peak tank or space are to be collared when situated in the vicinity of the bracket toe.
2. When fractures have extended into the side shell or bulkhead plating, the plating is to be cropped and part renewed.

BULK CARRIERS	Guidelines for Surveys, Assessment and Repair of Hull Structure	
Part 1	Cargo hold region	Example No.
Area 3	Cargo hold side structure	8
Detail of damage	Fractures at the supporting brackets in way of the collision bulkhead with no side shell panting stringer in hold	

Sketch of damage

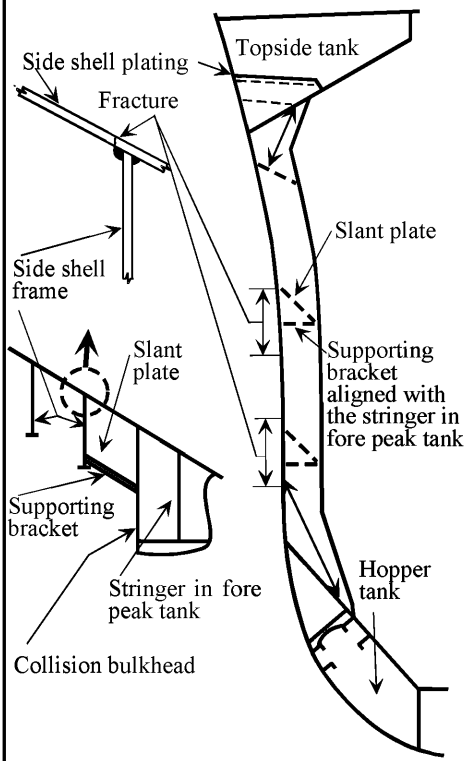

Sketch of repair

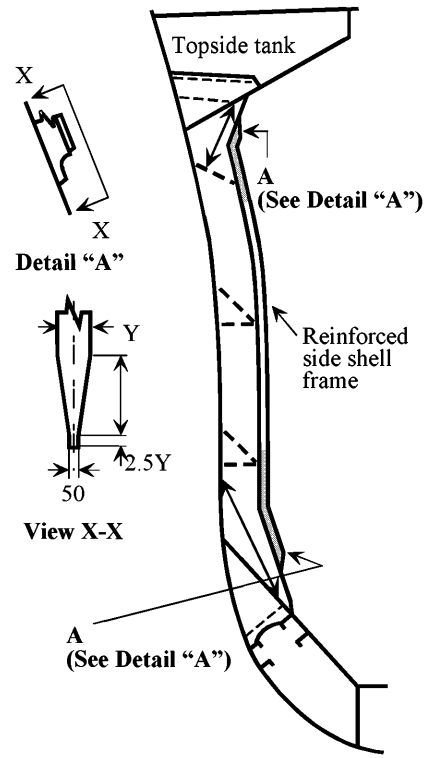

Notes on possible cause of damage

1. Damage caused by stress concentration leading to fatigue fracture in side shell. This has been exacerbated because of the greater flexibility of the hold structure in relation to the structure forward of the collision bulkhead.

Notes on repairs

1. Fractured shell plates to be cropped and part renewed, and side shell frame/frames in the vicinity of the damage to be reinforced as required by the relevant Classification Society.

BULK CARRIERS	Guidelines for Surveys, Assessment and Repair of Hull Structure	
Part 1	Cargo hold region	Example No.
Area 3	Cargo hold side structure	9
Detail of damage	Fractures in way of horizontal diaphragm in the connecting trunk between topside tank and hopper double bottom tank, on after side of collision bulkhead	

Sketch of damage

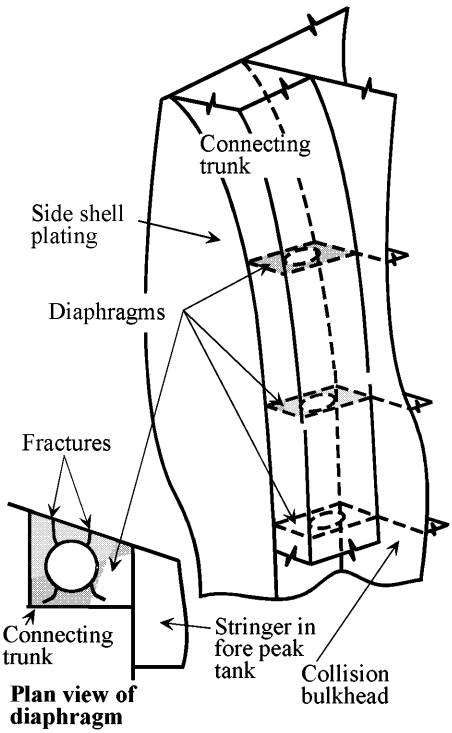

Sketch of repair

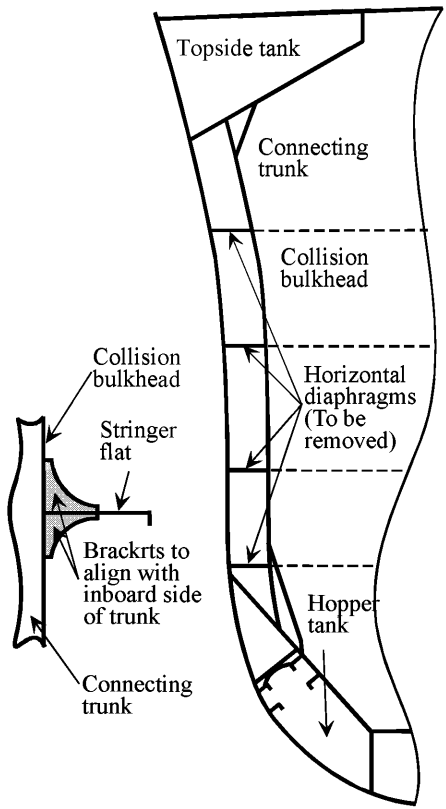

Notes on possible cause of damage

1. Damage caused by stress concentration resulting from the discontinuity created by the trunk and diaphragm structure. This has been exacerbated because of the greater flexibility of the hold structure in relation to the trunk and structure forward of the collision bulkhead.

Notes on repairs

1. Diaphragm to be removed permanently and fractured shell plated cropped and part renewed, or veed and weld as necessary in way of damage. Brackets with softened to toes are to be fitted on forward side of collision bulkhead in way of stringers/flats to align with inboard side of trunk in order to remove hard-spots.

BULK CARRIERS	Guidelines for Surveys, Assessment and Repair of Hull Structure	
Part 1	Cargo hold region	Example No.
Area 3	Cargo hold side structure	10
Detail of damage	Fractures in way of continuation/extension brackets in aftermost hold at the engine room bulkhead	

Sketch of damage

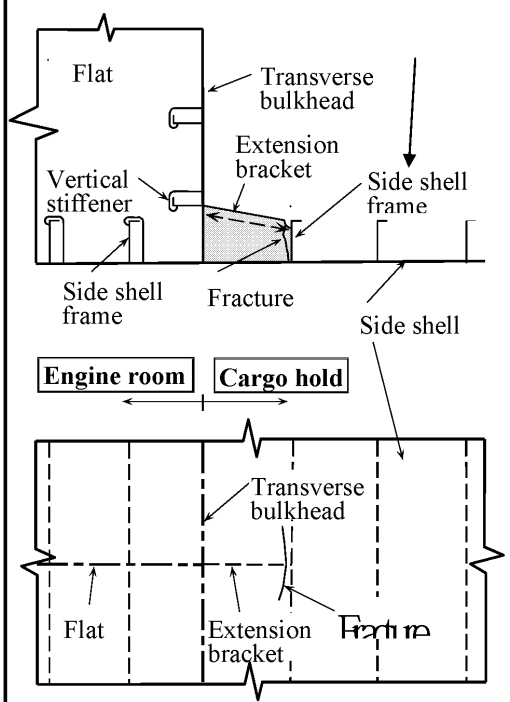

Sketch of repair

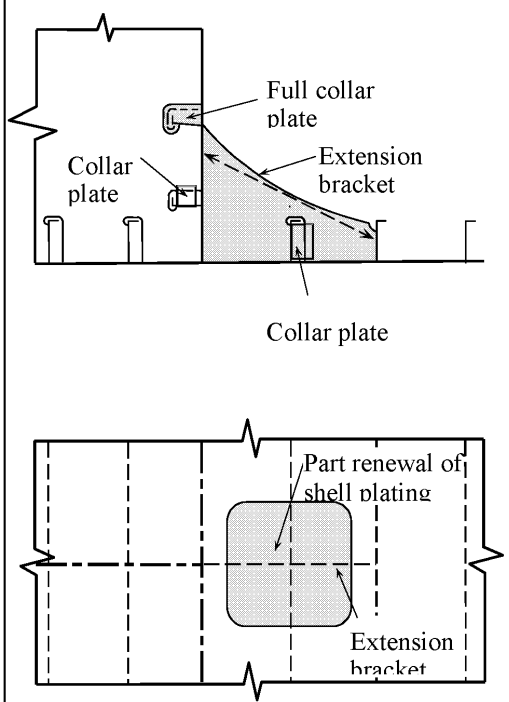

Notes on possible cause of damage

1. Damage caused by stress concentration leading to fatigue fracture on side shell. This will be exacerbated because of the greater flexibility of the hold structure in relation to the engine room structure.

Notes on repairs

1. The fractured shell plating is to be cropped and part renewed as necessary.
2. Extension bracket is to be modified and collar plates to cut-outs in engine room flat are to be installed.

Area 4 Transverse bulkhead including stool structure

Contents

1 General

2 What to look for - Hold inspection
2.1 Material wastage
2.2 Deformations
2.3 Fractures

3 What to look for - Stool inspection
3.1 Material wastage
3.2 Deformations
3.3 Fractures

4 General comments on repair
4.1 Material wastage
4.2 Deformations
4.3 Fractures

Figures and/or Photographs - Area 4	
No.	**Title**
Figure 1	Transverse bulkhead - Potential problems areas
Figure 2	Typical fracturing at the connection of transverse bulkhead structure
Photograph 1	Collapsed and detached transverse bulkhead

Examples of structural detail failures and repairs - Area 4	
Example No.	**Title**
1-a	Fractures at weld connections to stool shelf plate
1-b	Fractures at weld connections to stool shelf plate
2	Fractures at the upper boundaries to topside tank
3	Indentation and buckling of vertical corrugations
4	Fractures in the web of the corrugation initiating at intersection of adjacent shedder plates
5	Fractures at welded connections of lower stool plating to inner bottom plating in way of duct keel
6	Fractures at connection of lower stool to hopper
7	Buckling of strut supporting hatch end beam

1 General

1.1 The transverse bulkheads at the ends of dry cargo holds are mainly ordinary watertight bulkheads serving two main functions:

(a) As main transverse strength elements in the structural design of the ship.

(b) As subdivision to prevent progressive flooding in an emergency situation.

1.2 The transverse bulkheads at the ends of a combined ballast/ cargo hold are deep tank bulkheads which, in addition to the functions given in 1.1, are designed to withstand the water pressure from a hold fully filled with water ballast.

1.3 The bulkheads are commonly constructed as vertically corrugated with a lower stool, and with or without an upper stool (See **Chapter 3 Technical background for surveys - Figure 3 (b)**). Other constructions may be:
Plane bulkhead plating with one sided vertical stiffeners.
Double plated bulkhead with internal stiffening, with or without stool(s).

1.4 Dry cargo holds, not designed as ballast holds, may sometimes be partially filled with water ballast in order to achieve a satisfactory air draught at the loading/discharging berths.
The filling is restricted to a level that corresponds to the dry cargo hold scantlings, in particular the transverse bulkheads scantlings, and must only be carried out in port. In no case should these cargo holds be partially filled during voyage to save time at the berth. Such filling at sea may cause sloshing resulting in catastrophic failure such as indicated in **Photograph 1**.

1.5 Heavy corrosion may lead to collapse of the structure under extreme load, such as indicated in **Photograph 1** if it is not rectified properly.

1.6 A summary of potential problem areas is shown in **Figure 1**. It is emphasised that appropriate access arrangement as indicated in **Chapter 4 Survey planning, preparation and execution** of the guidelines, should be provided to enable a proper close-up inspection and thickness measurement as necessary.



Photograph 1
Collapsed and detached transverse bulkhead

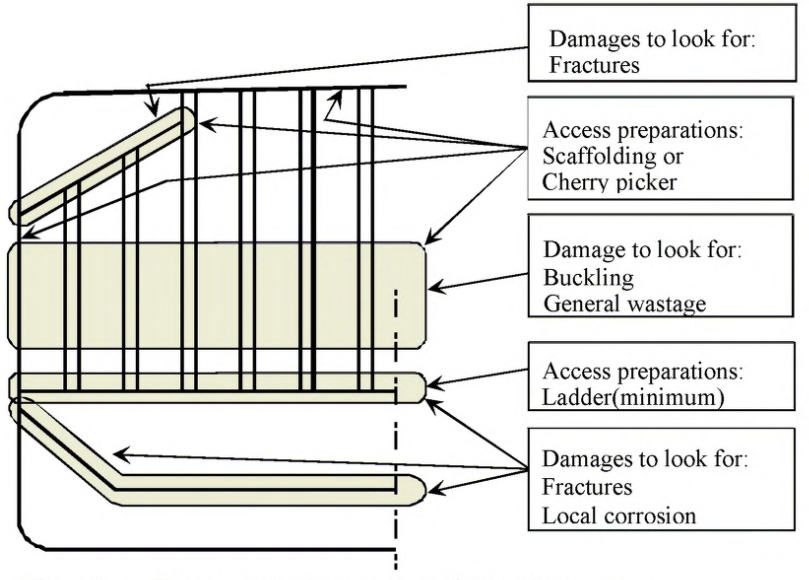

Figure 1 Transverse bulkhead - Potential problem areas

2 What to look for - Hold inspection

2.1 Material wastage

2.1.1 Excessive corrosion may be found in the following locations.

(a) At the mid-height and at the bottom of the bulkheads. The structure may look in deceptively good condition but in fact may be heavily corroded. The corrosion is created by the corrosive effect of cargo and environment, in particular when the structure is not coated.

(b) Bulkhead plating adjacent to the shell plating

(c) Bulkhead trunks which form part of the venting, filling and discharging arrangements between the topside tanks and the hopper tanks.

(d) Bulkhead plating and weld connections to the lower/upper stool shelf plates and inner bottom.

(e) In way of weld connections to topside tanks and hopper tanks.

2.1.2 If coatings have broken down and there is evidence of corrosion, it is recommended that random thickness measurements be taken to establish the level of diminution.

2.1.3 Where the terms and requirements of the periodical survey dictate thickness measurement, or when the surveyor deems necessary, it is important that the extent of the gauging be sufficient to determine the general condition of the structure.

2.2 Deformations

2.2.1 Deformation due to mechanical damage is often found in bulkhead structure.

2.2.2 When the bulkhead has sustained serious uniform corrosion, the bulkhead may suffer shear buckling. Evidence of buckling may be indicated by the peeling of paint or rust. However, where deformation resulting from bending or shear buckling has occurred on a bulkhead with a small diminution in thickness, this could be due to poor design or overloading and this aspect should be investigated before proceeding with repairs.

2.3 Fractures

2.3.1 Fractures usually occur at the boundaries of corrugations and bulkhead stools particularly in way of shelf plates, shedder plates, deck, inner bottom, etc. (See **Figure 2**).

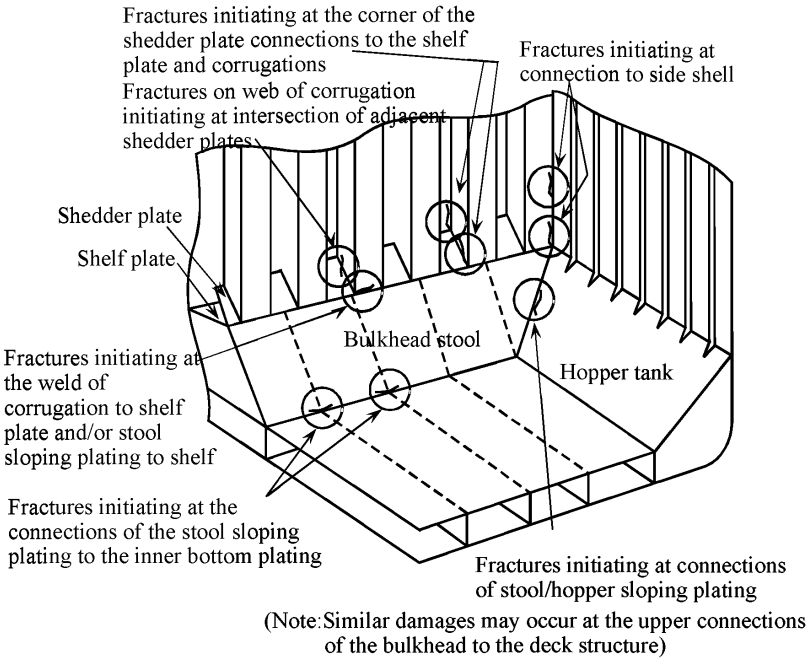

Figure 2 Typical fracturing at the connection of transverse bulkhead structure

3 What to look for - Stool inspection

3.1 Material wastage

3.1.1 Excessive corrosion may be found on diaphragms, particularly at their upper and lower weld connections.

3.2 Deformations

3.2.1 Damage to the stool structure should be checked when deformation due to mechanical damage is observed during hold inspection.

3.3 Fractures

3.3.1 Fractures observed at the connection between lower stool and corrugated bulkhead during hold inspection may have initiated at the weld connection of the inside diaphragms (See **Example 1**).

3.3.2 Misalignment between bulkhead corrugation flange and sloping stool plating may also cause fractures at the weld connection of the inside diaphragms (See **Example 2**).

4 General comments on repair

4.1 Material wastage

4.1.1 When the reduction in thickness of plating and stiffeners has reached the diminution levels permitted by the Classification Society involved, the wasted plating and stiffeners are to be cropped and renewed.

4.2 Deformations

4.2.1 If the deformation is local and of a limited extent, it could generally be faired out. Deformed plating in association with a generalized reduction in thickness should be partly or completely renewed.

4.2.2 Buckling of the bulkhead plating can also occur in way of the side shell resulting from contact damage and this is usually quite obvious. In such cases the damaged area is to be cropped and partly renewed. If the deformation is extensive, replacement of the plating, partly or completely, may be necessary. If the deformation is not in association with generalized reduction in thickness or due to excessive loading, additional strengthening should be considered.

4.3 Fractures

4.3.1 Fractures that occur at the boundary weld connections as a result of latent weld defects should be veed-out, appropriately prepared and re-welded preferably using low hydrogen electrodes or equivalent.

4.3.2 For fractures other than those described in **4.3.1**, re-welding may not be a permanent solution and an attempt should be made to improve the design and construction in order to obviate a recurrence. Typical examples of such cases are as follows:

(a) **Fractures in the weld connections of the stool plating to the shelf plate in way of the scallops in the stool's internal structure**

The scallops should be closed by fitting over-lap collar plates and the stool weld connections repaired as indicated in **4.3.1**. The over-lap collar should have a full penetration weld connection to the stool and shelf plate and should be completed using low hydrogen electrodes prior to welding the collar to the stool diaphragm/bracket.

(b) **Fractures in the weld connections of the corrugations and/or stool plate to the shelf plate resulting from misalignment of the stool plate and the flange of the corrugation (Similarly misalignment of the stool plate with the double bottom floor)**

It is recommended that the structure be released, the misalignment rectified, and the stool, floor and corrugation weld connection appropriately repaired as indicated in **4.3.1**. Other remedies to such damages include fitting of brackets in the stool in line with the webs of the corrugations. In such cases both the webs of the corrugations and the brackets underneath are to have full penetration welds and the brackets are to be arranged without scallops. However, in many cases this may prove difficult to attain.

(c) **Fractures in the weld connections of the corrugation to the**

lower shelf plate resulting from fractured welding of the adjacent shedder plate

It is recommended that suitable scallops be arranged in the shedder plate in way of the connection, and the weld connections of the corrugations be repaired as indicted in **4.3.1**.

(d) **Fractures in the weld connections of the corrugations to the hopper tank, topside tank or to the deck in the vicinity of the hatchway opening**

It is recommended that the weld connection be repaired as indicated in **4.3.1** and, where possible, additional stiffening be fitted inside the tanks to align with the flanges of the corrugations, or on the under deck clear of the tanks.

BULK CARRIERS	Guidelines for Surveys, Assessment and Repair of Hull Structure	
Part 1	Cargo hold region	Example No.
Area 4	Transverse bulkhead and associated structure in cargo hold	1-a
Detail of damage	Fractures at weld connections to stool shelf plate	

Sketch of damage

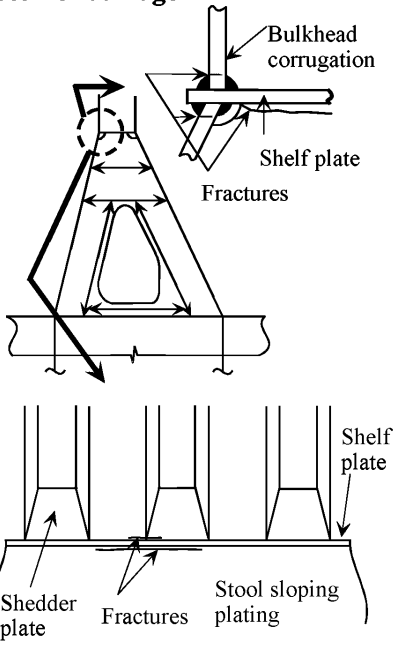

Sketch of repair

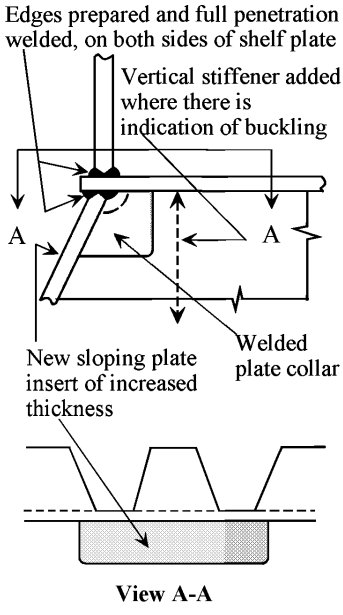

Notes on possible cause of damage

1. Stress concentrations at welds adjacent to the scallops.
2. Inadequate welding area connecting corrugation flange to shelf plate or similarly sloping stool plating to shelf plate.
3. Inadequate thickness of sloping plating in relation to corrugation flange thickness.
4. Stress concentration at knuckle of corrugation where web is not supported by bracket inside the stool.

Notes on repairs

1. Fractures to be veed-out and rewelded.
2. Reductions in stress concentration by fitting welded plate collars in way of the scallop.
3. Where necessary an insert plate to be arranged in stool plating and/or diaphragm.

BULK CARRIERS	Guidelines for Surveys, Assessment and Repair of Hull Structure	
Part 1	Cargo hold region	Example No.
Area 4	Transverse bulkhead and associated structure in cargo hold	1-b
Detail of damage	Fractures at weld connections to stool shelf plate	

Sketch of damage

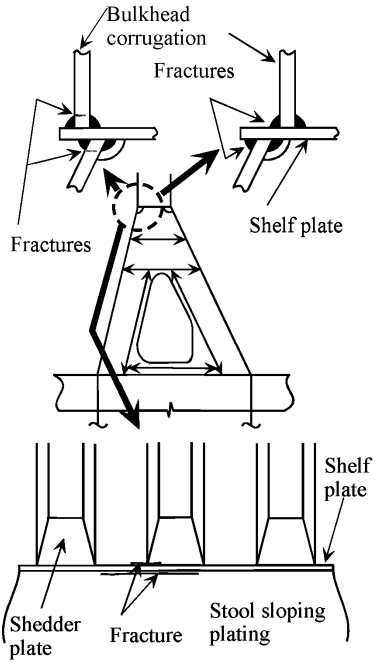

Sketch of repair

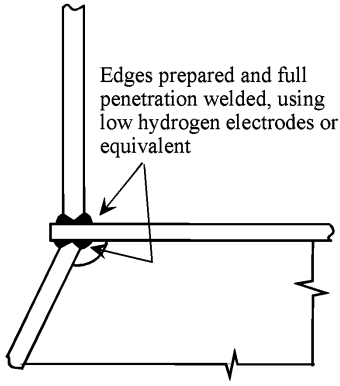

Notes on possible cause of damage

1. Misalignment between corrugation flange and sloping stool plating.
2. Inadequate welding area connecting corrugation flange to shelf plate or similarly sloping stool plating to shelf plate.

Notes on repairs

1. Fractures to be veed-out and rewelded.
2. Structure to be released and misalignment rectified.
3. Edge of the corrugated bulkhead and the stool plating on both sides of shelf plate to have full penetration welds.
4. Where necessary an insert plate to be arranged in stool plating.

BULK CARRIERS	Guidelines for Surveys, Assessment and Repair of Hull Structure	
Part 1	**Cargo hold region**	**Example No.**
Area 4	**Transverse bulkhead and associated structure in cargo hold**	**2**
Detail of damage	Fractures at the upper boundaries to topside tanks	

Sketch of damage

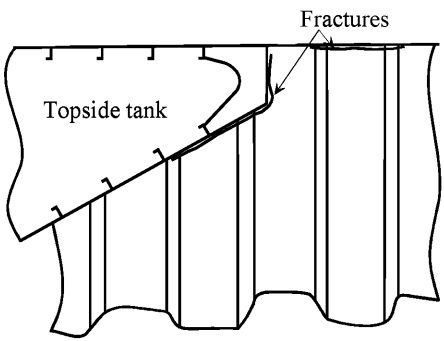

Sketch of repair

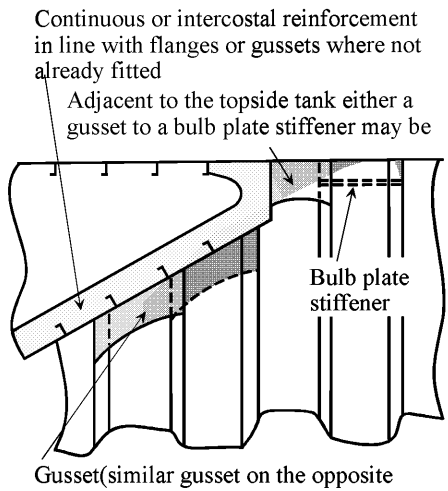

Notes on possible cause of damage

1. Damage due to poor design and/or defective welds.

Notes on repairs

1. Fractures may be veed-out and rewelded. If necessary corrugated plating cropped and renewed.
2. It is recommended that reinforcement as shown above be incorporated, giving due consideration to the following criteria:

2.1 It is important to have the gusset plates well aligned with the transverse structure inside the tank. Gusset plates may be joggled to obtain this alignment.

2.2 If there is no transverse web already existing inside the topside tank and in line with the flanges of corrugation or gusset plates, reinforcement as shown above to be fitted.

BULK CARRIERS	Guidelines for Surveys, Assessment and Repair of Hull Structure	
Part 1	Cargo hold region	Example No.
Area 4	Transverse bulkhead and associated structure in cargo hold	3
Detail of damage	Indentation and buckling of vertical corrugation	

Sketch of damage

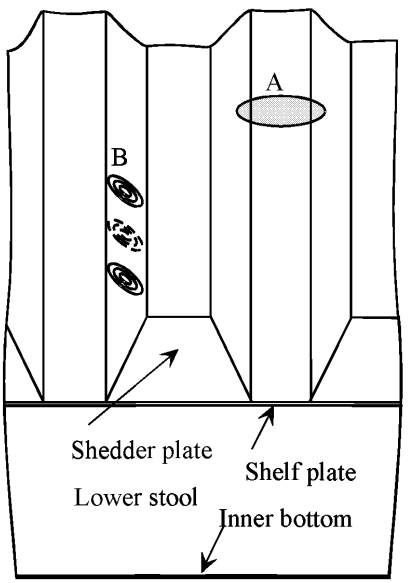

Sketch of repair

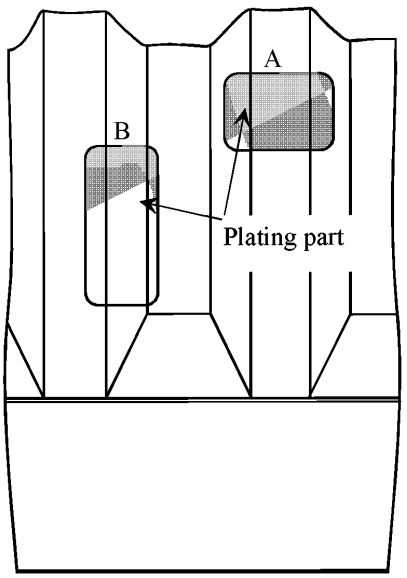

Notes on possible cause of damage

1. Damages by mechanical abuse during cargo handling e.g. grab damage.
2. Damage resulting from thickness reduction by corrosion.
3. Buckling caused by bending or shear, see locations A and B respectively above, with a minimum reduction in thickness could be caused by underdesign or overloading. If this cause is suspected, the Classification Society concerned shall be contacted before proceeding with repairs.

Notes on repairs

1. Damage by mechanical abuse
   If the indentation/buckling is local and of a minor nature, the plating can be faired in place.
   If the deformation is more pronounced and/or in association with a generalized reduction in thickness the plating is to be cropped and renewed, as shown at locations A and B above.
2. Damage resulting from corrosion
   In this case thickness measurements are to be taken at mid-span and top and bottom of corrugations, and corrugations renewed or part renewed as necessary. Particular attention is to be given to the fit and alignment at corners of flanged corrugations when being partly renewed.

BULK CARRIERS	Guidelines for Surveys, Assessment and Repair of Hull Structure	
Part 1	Cargo hold region	Example No.
Area 4	Transverse bulkhead and associated structure in cargo hold	4
Detail of damage	Fractures in the web of the corrugation initiating at intersection of adjacent shedder plates	

Sketch of damage

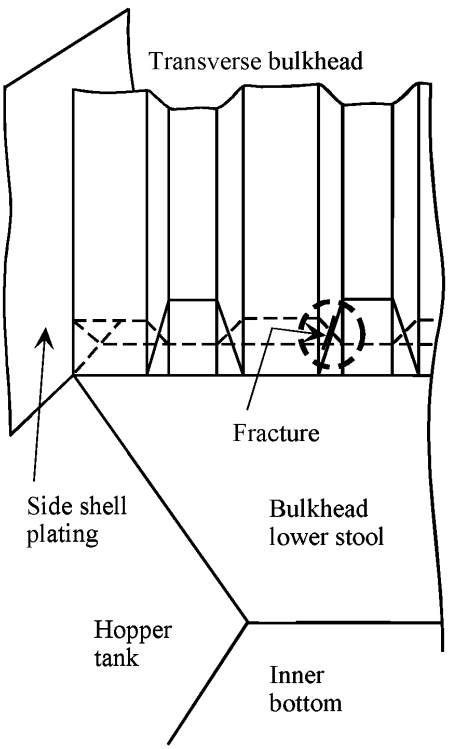

Sketch of repair

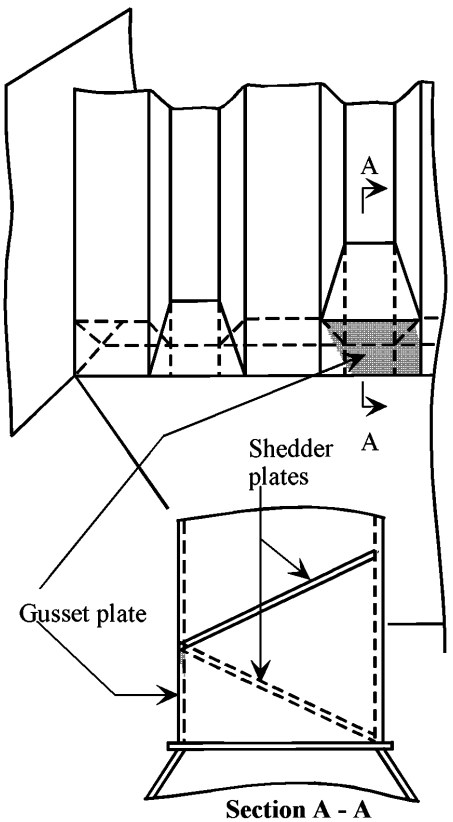

Notes on possible cause of damage

1. Damage due to stress concentrations at intersection of shedder plates. This can be exacerbated by corrosion and reduction in thickness of the corrugation web plating.

Notes on repairs

1. If due to wastage, corrugation plating and shedder plates to be part renewed/renewed as necessary.
2. Where renewals are being carried out it may be prudent to fit the extension pieces shown above to change the location of the point of intersection, and hence reduce the stress concentration.

BULK CARRIERS	Guidelines for Surveys, Assessment and Repair of Hull Structure	
Part 1	**Cargo hold region**	**Example No.**
Area 4	**Transverse bulkhead and associated structure in cargo hold**	**5**
Detail of damage	Fractures at weld connection of lower stool plating to inner bottom in way of duct keel	

Sketch of damage

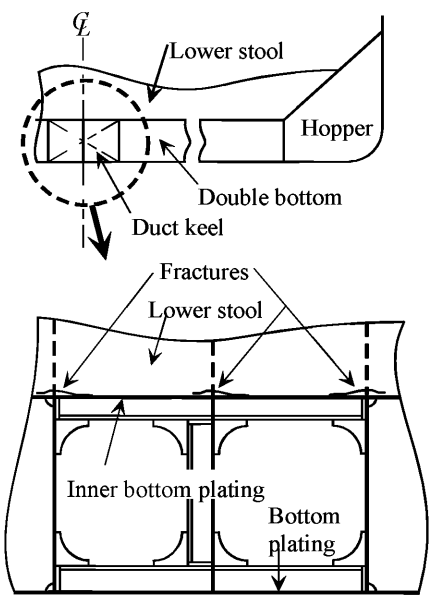

Sketch of repair

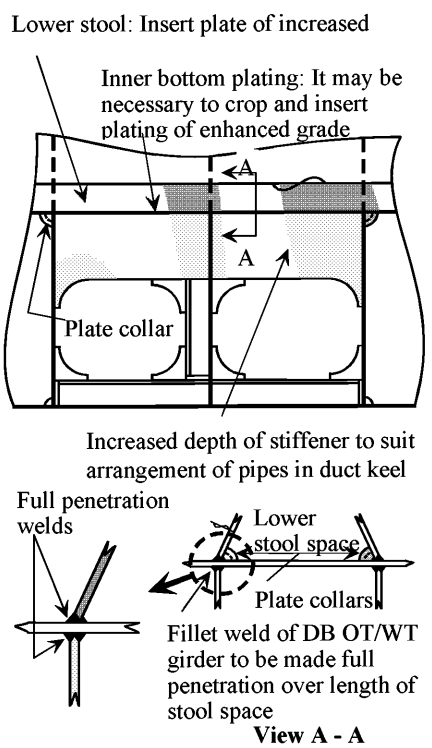

Notes on possible cause of damage

1. This type of failure is more likely to occur at the boundaries of the ballast hold.
2. The fractures arise because of stress concentration in way of cut-outs and exacerbated by the flexibility of the inner bottom structure in way of the duct keel.

Notes on repairs

1. In order to prevent recurrence of the damage, the additional reinforcement shown should be fitted.

BULK CARRIERS	Guidelines for Surveys, Assessment and Repair of Hull Structure	
Part 1	Cargo hold region	Example No.
Area 4	Transverse bulkhead and associated structure in cargo hold	6
Detail of damage	Fractures at the connection of lower stool to hopper	

Sketch of damage

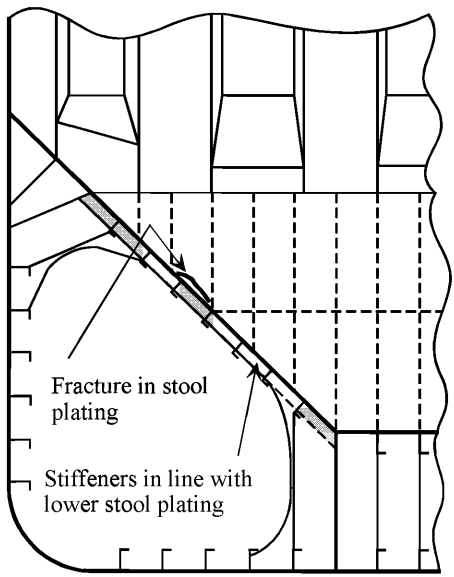

Sketch of repair

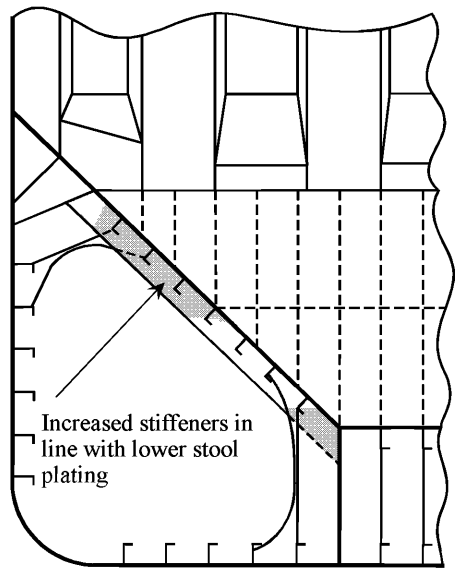

Notes on possible cause of damage

1. Insufficient strength of the connection
2. Corrosion

Notes on repairs

1. Fractured stool plating should be partly cropped and renewed (thicker plate) if considered necessary.
2. If the damage occurred due to insufficient strength, stiffeners in line with stool plating should be increased.

BULK CARRIERS	Guidelines for Surveys, Assessment and Repair of Hull Structure	
Part 1	**Cargo hold region**	**Example No.**
Area 4	**Transverse bulkhead and associated structure in cargo hold**	**7**
Detail of damage	Buckling of strut supporting hatch end beam	

Sketch of damage

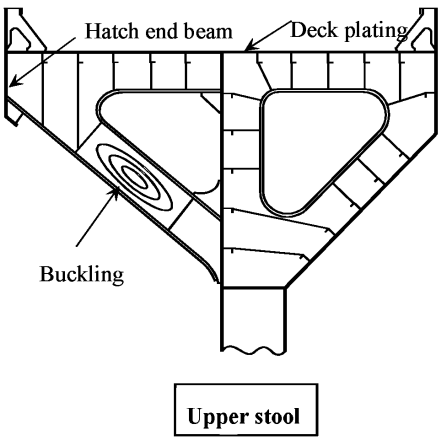

Sketch of repair

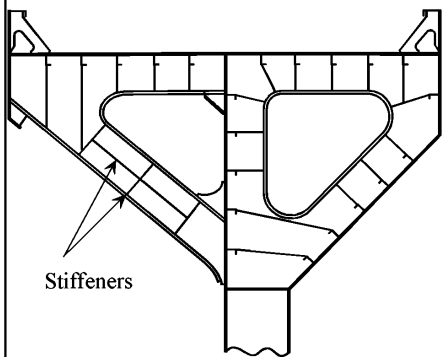

Notes on possible cause of damage

1. Insufficient strength
2. Partial ballast loading in ballast cargo hold (sloshing)
3. Corrosion

Notes on repairs

1. Deformed part to be cropped and renewed if considered necessary.
2. If the damage occurred due to insufficient strength, appropriate reinforcement is to be considered (thicker plate/additional stiffener(s)).

Area 5Double bottom tank structure including hopper

Contents

1 General

2 What to look for - Tank top inspection
2.1 Material wastage
2.2 Deformations
2.3 Fractures

3 What to look for - Double bottom and hopper tank inspection
3.1 Material wastage
3.2 Deformations
3.3 Fractures

4 What to look for - External bottom inspection
4.1 Material wastage
4.2 Deformations
4.3 Fractures

5 General comments on repair
5.1 Material wastage
5.2 Deformations
5.3 Fractures

Figures and/or Photographs - Area 5	
No.	**Title**
Figure 1	Typical fractures in the connection of hopper plating and inner bottom plating
Photograph 1	Grooving corrosion of weld of bottom plating
Photograph 2	Section of the grooving shown in Photograph 1

Examples of structural detail failures and repairs - Area 5	
Example No.	**Title**
1	Fractures in inner bottom plating around container bottom pocket
2	Fractures, corrosion and/or buckling of floor/girder around lightening hole
3	Fractures at weld connections of floors in way of hopper/inner bottom interface (radiused knuckle)
4	Fractures at weld connections of floors in way of hopper/inner bottom interface (welded knuckle)

Examples of structural detail failures and repairs - Area 5	
Example No.	**Title**
5	Fractures at weld connections of floors in way of inner bottom and side girders, and plating of bulkhead stool
6	Fractures and buckling in way of a cut-out for the passage of a longitudinal through a transverse primary member
7	Fractures in longitudinal at floor/transverse web frame or bulkhead
8	Fractures in bottom and inner bottom longitudinals in way of inner bottom and bulkhead stool boundaries
9	Fractures in longitudinals in way of bilge well
10	Buckling of transverse web
11	Fractures at weld connection of the transverse brackets
12	Fractures in bottom shell/side shell/hopper sloping plating at the corner of drain hole/air hole in longitudinal
13	Fractures in bottom shell plating along side girder and/or bottom longitudinal
14	Corrosion in bottom shell plating below suction head
15	Corrosion in bottom shell plating below sounding pipe
16	Deformation of forward bottom shell plating due to slamming
17	Fractures in bottom shell plating at the termination of bilge keel

1 General

1.1 In addition to contributing to the longitudinal bending strength of the hull girder, the double bottom structure provides support for the cargo in the holds. The tank top structure is subjected to impact forces of cargo and mechanical equipment during cargo loading and unloading operations. The bottom shell at the forward part of the ship may sustain increased dynamic forces caused by slamming in heavy weather.

1.2 Double bottom tank structure in way of combined cargo/ballast hold(s) is more prone to fractures and deformation compared to the structure in way of holds dedicated for carriage of cargo.

1.3 The weld at the connections of the tank top/hopper sloping plate and tank top/bulkhead stool may suffer damage caused by the use of bulldozers to unloading cargo.

2 What to look for - Tank top inspection

2.1 Material wastage

2.1.1 The general corrosion condition of the tank top structure may be observed by visual inspection. The level of wastage of tank top plating may have to be established by means of thickness measurement.

2.1.2 The bilge wells should be cleaned and inspected closely since heavy pitting corrosion may have occurred due to accumulated water/corrosive solution in the wells. Special attention should be paid to the plating in way of the bilge suction and sounding pipes.

2.1.3 Special attention should also be paid to areas where pipes penetrate the tank top.

2.2 Deformations

2.2.1 Buckling of the tank top plating may occur between longitudinals in areas subject to in-plane transverse compressive stresses or between floors in areas subject to in-plane longitudinal compressive stresses.

2.2.2 Deformed structures may be observed in areas of the tank top due to overloading of cargo, impact of cargo during loading/unloading operations, or the use of mechanical unloading equipment.

2.2.3 Whenever deformations are observed on the tank top, further inspection in the double bottom tanks is imperative in order to determine the extent of the damage. The deformation may cause the breakdown of coating within the double bottom, which in turn may lead to accelerated corrosion rate in these unprotected areas.

2.3 Fractures

2.3.1 Fractures will normally be found by close-up inspection. Fractures that

extend through the thickness of the plating or through the welds may be observed during pressure testing of the double bottom tanks (See **Figure 1** and **2** of **Area 4**).

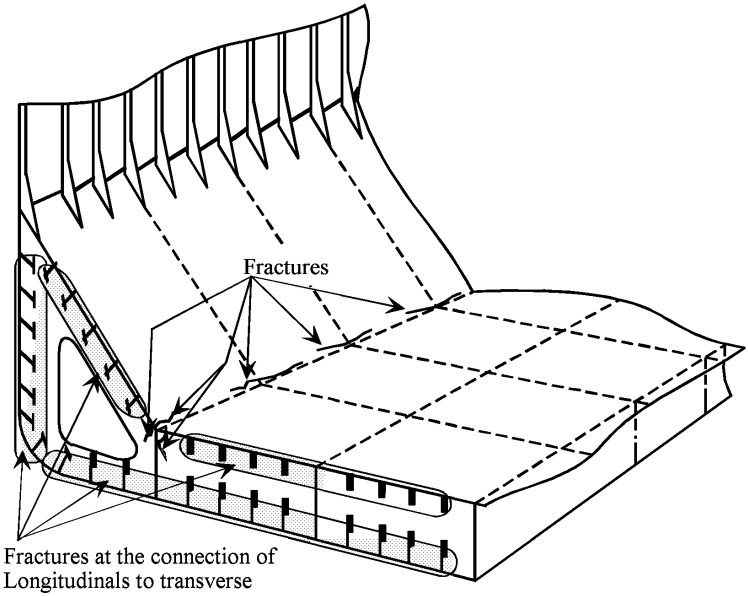

Figure 1 Typical fractures in the connection of hopper sloping plating to inner bottom (tank top) and longitudinals to transverse (or transverse bulkhead)

3 What to look for - Double bottom and hopper tank inspection

3.1 Material wastage

3.1.1 The level of wastage of double bottom internal structure (longitudinals, transverses, floors, girders, etc.) may have to be established by means of thickness measurements.

Rate and extent of corrosion depends on the corrosive environment, and protective measures employed, such as coatings and sacrificial anodes. The following structures are generally susceptible to corrosion (also see **3.1.2** - **3.1.4**).

(a) Structure in corrosive environment
Back side of inner bottom plating and inner bottom longitudinal
Transverse bulkhead and girder adjacent to heated fuel oil tank

(b) Structure subject to high stress
Face plates and web plates of transverse at corners

Connection of longitudinal to transverse
(c) Areas susceptible to coating breakdown
Back side of face plate of longitudinal
Welded joint
Edge of access opening
(d) Areas subject to poor drainage
Web of side longitudinals

3.1.2 If the protective coating is not properly maintained, structure in the ballast tank may suffer severe localised corrosion. In general, structure at the upper part of the double bottom tank usually has more severe corrosion than that at the lower part. Transverse webs in the hopper tanks may suffer severe corrosion at their corners where high shearing stresses occur, especially where collar plate is not fitted to the slot of the longitudinal.

3.1.3 The high temperature due to heated fuel oil may accelerate corrosion of ballast tank structure near heated fuel tanks. The rate of corrosion depends on several factors such as:
- Temperature and heat input to the ballast tank.
- Condition of original coating and its maintenance. (It is preferable for applying the protective coating of ballast tank at the building of the ship, and for subsequent maintenance, that the stiffeners on the boundaries of the fuel tank be fitted within the fuel tank instead of the ballast tank).
- Ballasting frequency and operations.
- Age of ship and associated stress levels as corrosion reduces the thickness of the structural elements and can result in fracturing and buckling.

3.1.4 Shell plating below suction head often suffers localized wear caused by erosion and cavitation of the fluid flowing through the suction head. In addition, the suction head will be positioned in the lowest part of the tank and water/mud will cover the area even when the tank is empty. The condition of the shell plating may be established by feeling by hand beneath the suction head. When in doubt, the lower part of the suction head should be removed and thickness measurements taken. If the vessel is docked, the thickness can be measured from below. If the distance between the suction head and the underlying shell plating is too small to permit access, the suction head should be dismantled. The shell plating below the sounding pipe should also be carefully examined. When a striking plate has not been fitted or is worn out, heavy corrosion can be caused by the striking of the weight of the sounding tape (See **Example 2** in **Part 3**).

3.2 Deformations

3.2.1 Where deformations are identified during tank top inspection (See **2.2**) and external bottom inspection (See **4.2**), the deformed areas should be subjected to in tank inspection to determine the extent of the damage to

the coating and internal structure.

Deformations in the structure not only reduce the structural strength but may also cause breakdown of the coating, leading to accelerated corrosion.

3.3 Fractures

3.3.1 Fractures will normally be found by close-up inspection.

3.3.2 Fractures may occur in way of the welded or radiused knuckle between the inner bottom and hopper sloping plating if the side girder in the double bottom is not in line with the knuckle and also when the floors below have a large spacing, or when corner scallops are created for ease of fabrication. The local stress variations due to the loading and subsequent deflection may lead to the development of fatigue fractures which can be categorised as follows (See **Figure 1**).

(a) Parallel to the knuckle weld for those knuckles which are welded and not radiused.

(b) In the inner bottom and hopper plating and initiated at the centre of a radiused knuckle.

(c) Extending in the hopper web plating and floor weld connections starting at the corners of scallops, where such exist, in the underlying hopper web and floor.

(d) Extending in the web plate as in (c) above but initiated at the edge of a scallop.

3.3.3 The fractures in way of connection of inner bottom plating/hopper sloping plating to stool may be caused by the cyclic deflection of the inner bottom induced by repeated loading from the sea or due to poor "through-thickness" properties of the inner bottom plating. Scallops in the underlying girders can create stress concentrations which further increase the risk of fractures. These can be categorised as follows (See **Figure 1** and **Examples**).

(a) In way of the intersection between inner bottom and stool. These fractures often generate along the edge of the welded joint above the centre line girder, side girders, and sometimes along the duct keel sides.

(b) Fractures in the inner bottom longitudinals and the bottom longitudinals in way of the intersection with the watertight floors below the transverse bulkhead stools in way of the ballast hold, especially in way of suction wells.

(c) Fractures at the connection between the longitudinals and the vertical stiffeners or brackets on the floors, as well as at the corners of the duct keel.

(d) Lamellar tearing of the inner bottom plate below the weld connection with the stool in the ballast hold caused by large bending stresses in the connection when in heavy ballast condition. The size of stool and lack of full penetration welds could also be a contributory factor, as well as poor "through-thickness" properties of the tank top plating.

3.3.4 Transition region

In general, the termination of the following structural members at the collision bulkhead and engine room forward bulkhead is prone to fractures:

- Hopper tank sloping plating
- Panting stringer in fore peak tank
- Inner bottom plating in engine room

In order to avoid stress concentration due to discontinuity appropriate stiffeners are to be provided in the opposite space. If such stiffeners are not provided, or are deficient due to corrosion or misalignment, fractures may occur at the terminations.

4 What to look for - External bottom inspection

4.1 Material wastage

4.1.1 Hull structure below the water line can usually be inspected only when the ship is dry-docked. The opportunity should be taken to inspect the external plating thoroughly. The level of wastage of the bottom plating may have to be established by means of thickness measurements.

4.1.2 Severe grooving along welding of bottom plating is often found (See **Photographs 1** and **2**). This grooving can be accelerated by poor maintenance of the protective coating and/or sacrificial anodes fitted to the bottom plating.

4.1.3 Bottom or "docking" plugs should be carefully examined for excessive corrosion along the edge of the weld connecting the plug to the bottom plating.

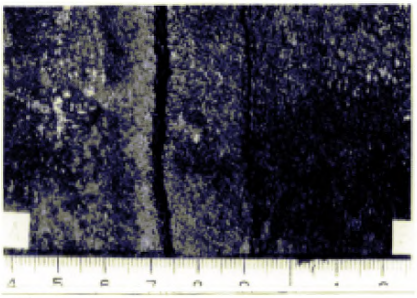

Photograph 1
Grooving corrosion of welding of bottom plating

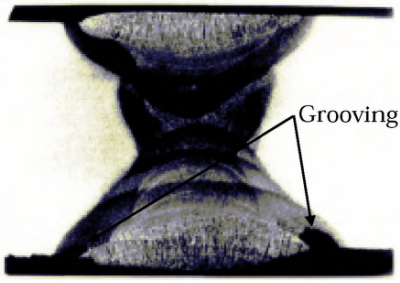

Photograph 2
Section of the grooving shown in Photograph 1

4.2 Deformations

4.2.1 Buckling of the bottom shell plating may occur between longitudinals or floors in areas subject to in-plane compressive stresses (either longitudinally or transversely). Deformations of bottom plating may also

be attributed to dynamic force caused by wave slamming action at the forward part of the vessel, or contact with underwater objects. When deformation of the shell plating is found, the affected area should be inspected internally. Even if the deformation is small, the internal structure may have suffered serious damage.

4.3 Fractures

4.3.1 The bottom shell plating should be inspected when the hull has dried since fractures in shell plating can easily be detected by observing leakage of water from the cracks in clear contrast to the dry shell plating.

4.3.2 Fractures in butt welds and fillet welds, particularly at the wrap around at scallops and ends of bilge keel, are sometimes observed and may propagate into the bottom plating. The cause of fractures in butt welds is usually related to weld defect or grooving. If the bilge keels are divided at the block joints of hull, all ends of the bilge keels should be inspected.

5 General comments on repair

5.1 Material wastage

5.1.1 Repair work in double bottom will require careful planning in terms of accessibility and gas freeing is required for repair work in fuel oil tanks.

5.1.2 Plating below suction heads and sounding pipes is to be replaced if the average thickness is below the acceptable limit (See **Examples 14** and **15**). When scattered deep pitting is found, it may be repaired by welding.

5.2 Deformations

Extensively deformed tank top and bottom plating should be replaced together with the deformed portion of girders, floors or transverse web frames. If there is no evidence that the deformation was caused by grounding or other excessive local loading, or that it is associated with excessive wastage, additional internal stiffening may need to be provided. In this regard, the Classification Society concerned should be contacted.

5.3 Fractures

5.3.1 Repair should be carried out in consideration of nature and extent of the fractures.

(a) Fractures of a minor nature may be veed-out and rewelded. Where cracking is more extensive, the structure is to be cropped and renewed.

(b) For fractures caused by the cyclic deflection of the double bottom, reinforcement of the structure may be required in addition to cropping and renewal of the fractured part.

(c) For fractures due to poor through thickness properties of the plating, cropping and renewal with steel having adequate through thickness properties is an acceptable solution.

5.3.2 The fractures in the knuckle connection between inner bottom plating

and hopper sloping plating should be repaired as follows.

(a) Where the fracture is confined to the weld, the weld is to be veed-out and renewed using full penetration welding, with low hydrogen electrodes or equivalent.

(b) Where the fracture has extended into the plating of any tank boundary, then the fractured plating is to be cropped, and part renewed.

(c) Where the fracture is in the vicinity of the knuckle, the corner scallops in floors and transverses are to be omitted, or closed by welded collars. The sequence of welding is important, in this respect every effort should be made to avoid the creation of locked in stresses due to the welding process.

(d) Where the floor spacing is 2.0m or greater, brackets are to be arranged either in the vicinity of, or mid-length between, floors in way of the intersection. The brackets are to be attached to the adjacent inner bottom and hopper longitudinals. The thickness of the bracket is to be in accordance with the Rules of the Classification Society concerned.

(e) If the damage is confined to areas below the ballast holds and the knuckle connection is of a radiused type, then in addition to rectifying the damage (i.e. weld or crop and renew), consideration is to be given to fitting further reinforcement, e.g. longitudinals or scarfing brackets, in the vicinity of the upper tangent point of the radius.

5.3.3 The fractures in the connection between inner bottom plating/hopper sloping plating and stool should be repaired as follows.

(a) Fractures in way of section of the inner bottom and bulkhead stool in way of the double bottom girders can be veed out and welded. However, reinforcement of the structure may be required, e.g. by fitting additional double bottom girders on both sides affected girder or equivalent reinforcement. Scallops in the floors should be closed and air holes in the non-watertight girders re-positioned.

If the fractures are as a result of differences in the thickness of adjacent stool plate and the floor below the inner bottom, then it is advisable to crop and part renew the upper part of the floor with plating having the same thickness and mechanical properties as the adjacent stool plating.

If the fractures are as a result of misalignment between the stool plating and the double bottom floors, the structure should be released with a view to rectifying the misalignment.

(b) Fractures in the inner bottom longitudinals and the bottom longitudinals in way of the intersection with watertight floors are to be cropped and partly renewed. In addition, brackets with soft toes are to be fitted in order to reduce the stress concentrations at the floors or stiffener.

(c) Fractures at the connection between the longitudinals and the vertical stiffeners or brackets are to be cropped and longitudinal part

renewed if the fractures extend to over one third of the depth of the longitudinal. If fractures are not extensive these can be veed out and welded. In addition, reinforcement should be provided in the form of modification to existing bracket toes or the fitting of additional brackets with soft toes in order to reduce the stress concentration.

(d) Fractures at the corners of the transverse diaphragm/stiffeners are to be cropped and renewed. In addition, scallops are to be closed by overlap collar plates. To reduce the probability of such fractures recurring, consideration is to be given to one of the following reinforcements or modifications.
- The fitting of short intercostal girders in order to reduce the deflection at the problem area.
- The depth of transverse diaphragm/stiffener at top of duct keel is to be increased as far as is practicable to suit the arrangement of pipes.

(e) Lamellar tearing may be eliminated through improving the type and quality of the weld, i.e. full penetration using low hydrogen electrodes and incorporating a suitable weld throat.

Alternatively the inner bottom plating adjacent to and in contact with the stool plating is substituted with plating of "Z" quality steel which has good "through-thickness" properties.

5.3.4 Bilge keel should be repaired as follows.

(a) Fractures or distortion in bilge keels must be promptly repaired. Fractured butt welds should be repaired using full penetration welds and proper welding procedures. The bilge keel is subjected to the same level of longitudinal hull girder stress as the bilge plating, fractures in the bilge keel can propagate into the shell plating.

(b) Termination of bilge keel requires proper support by internal structure. This aspect should be taken into account when cropping and renewing damaged parts of a bilge keel (See **Example 17**).

BULK CARRIERS	Guidelines for Surveys, Assessment and Repair of Hull Structure	
Part 1	Cargo hold region	Example No.
Area 5	Double bottom structure including hopper	1
Detail of damage	Fractures in inner bottom plating around container bottom pocket	

Sketch of damage

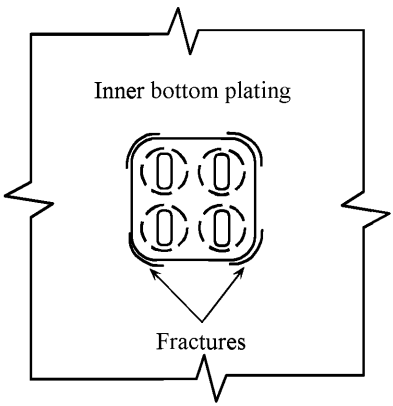

Sketch of repair

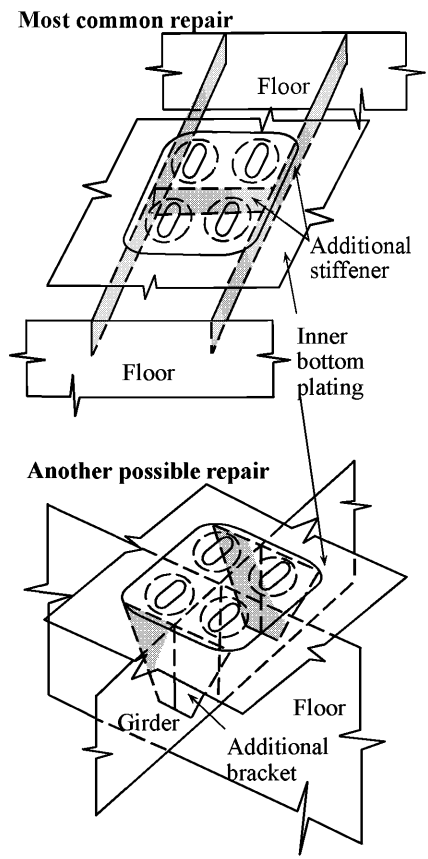

Notes on possible cause of damage

1. Pocket is not supported correctly by floor, longitudinal and/or stiffener.

Notes on repairs

1. Fractured plating should be cropped and part renewed.
2. Adequate reinforcement should be considered.

BULK CARRIERS	Guidelines for Surveys, Assessment and Repair of Hull Structure	
Part 1	Cargo hold region	Example No.
Area 5	Double bottom structure including hopper	2
Detail of damage	Fractures, corrosion and/or buckling of floor/girder around lightening hole	

Sketch of damage

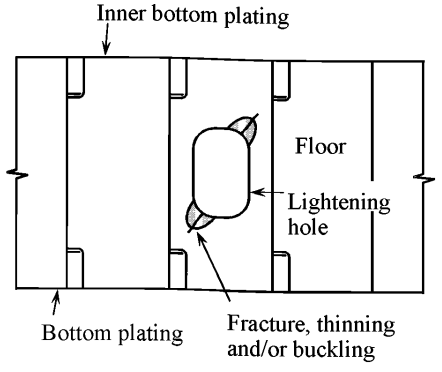

Sketch of repair

Repair A

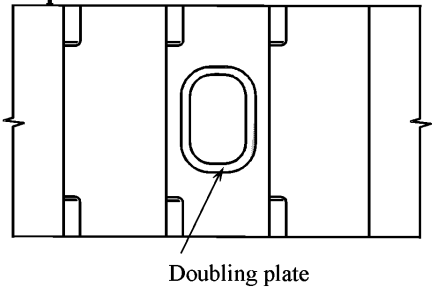

Repair B

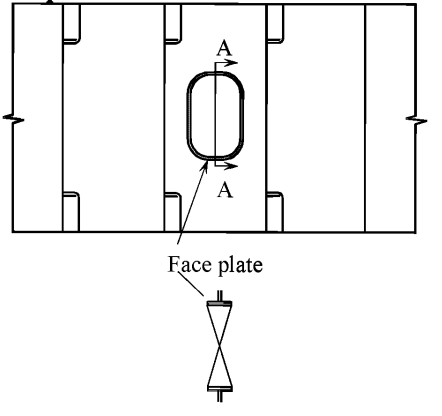

Notes on possible cause of damage

1. Insufficient strength due to lightening hole.
2. Fracture, corrosion and/or buckling around lightening hole due to high stress.

Notes on repairs

1. Fractured, corroded and/or buckled plating should be cropped and renewed if considered necessary.
2. Appropriate reinforcement should be considered.

BULK CARRIERS	Guidelines for Surveys, Assessment and Repair of Hull Structure	
Part 1	Cargo hold region	Example No.
Area 5	Double bottom tank structure including hopper	3
Detail of damage	Fractures at weld connections of floors in way of hopper/inner bottom interface (radiused knuckle)	

Sketch of damage

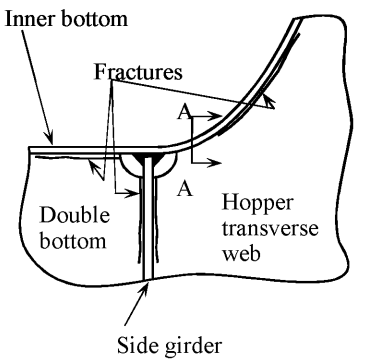

View A - A

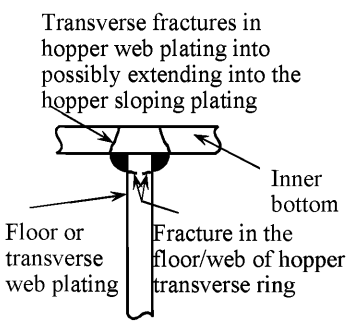

Sketch of repair

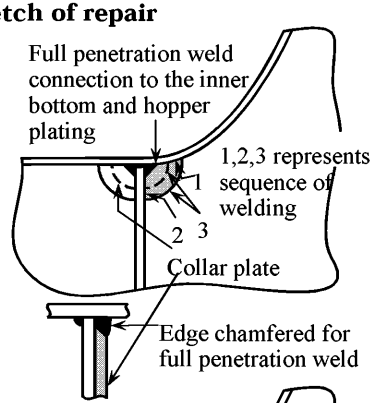

Reinforcement

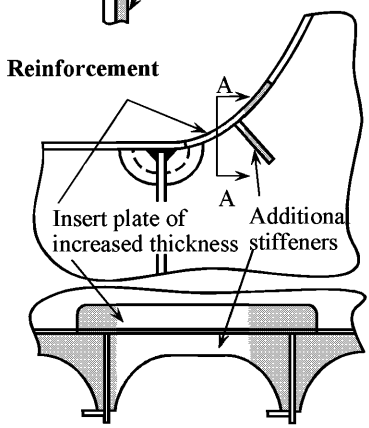

Notes on possible cause of damage

1. The damage is partly due to stress concentrations at the edges of the weld created by the presence of cut-outs and local stress variations caused by the deflections in the inner bottom/hopper plating.

Notes on repairs

1. The fracture in the weld and/or plating is veed-out/cropped and renewed as appropriate.
2. The cut-outs are eliminated by introducing suitable collar plate with emphasis on edge preparation and sequence of welding as shown above.
3. Further reinforcements may need to be carried out as shown above, however, after consultation with the Classification Society concerned.

BULK CARRIERS	Guidelines for Surveys, Assessment and Repair of Hull Structure	
Part 1	Cargo hold region	Example No.
Area 5	Double bottom tank structure including hopper	4
Detail of damage	Fractures at weld connections of floors in way of hopper/inner bottom interface (welded knuckle)	

Sketch of damage

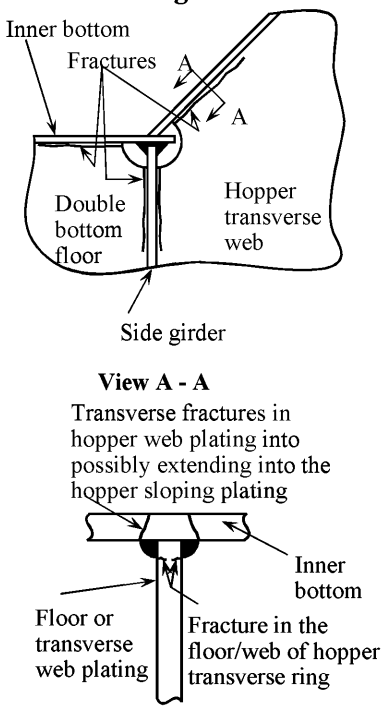

Sketch of repair

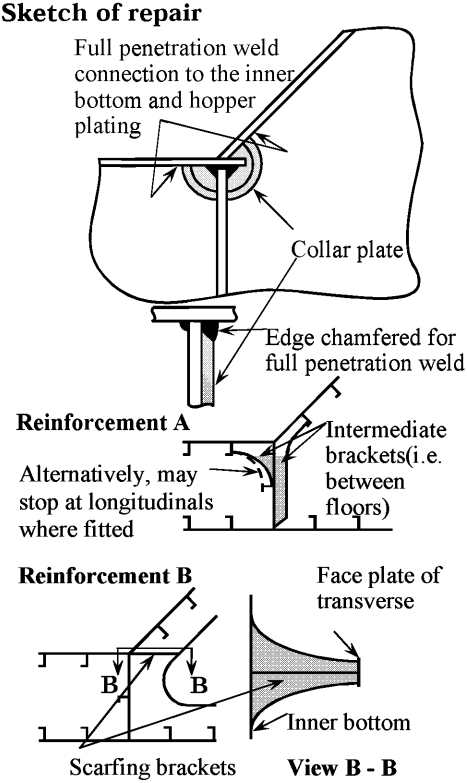

Notes on possible cause of damage

1. The damage is partly due to stress concentration at the edges of the weld .created by the presence of the deflections in the inner bottom/hopper plating.

Notes on repairs

1. The fracture in the weld and/or plating is veed-out/cropped and renewed as appropriate.
2. The cut-outs are eliminated by introducing suitable collar plates with emphasis on edge preparation and sequence of welding as shown above.
3. Further reinforcements may be incorporated as shown above and depending on the judged cause of damage.

BULK CARRIERS	Guidelines for Surveys, Assessment and Repair of Hull Structure	
Part 1	Cargo hold region	Example No.
Area 5	Double bottom tank structure including hopper	5
Detail of damage	Fractures at weld connections of floors in way of inner bottom and side girders, and plating of bulkhead stool	

Sketch of damage

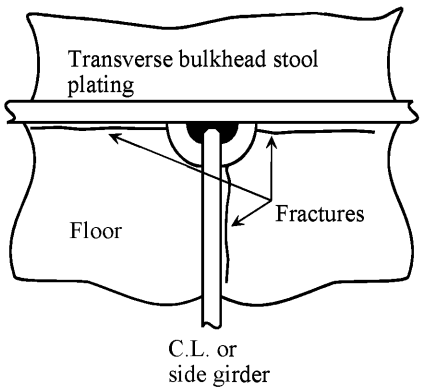

Sketch of repair

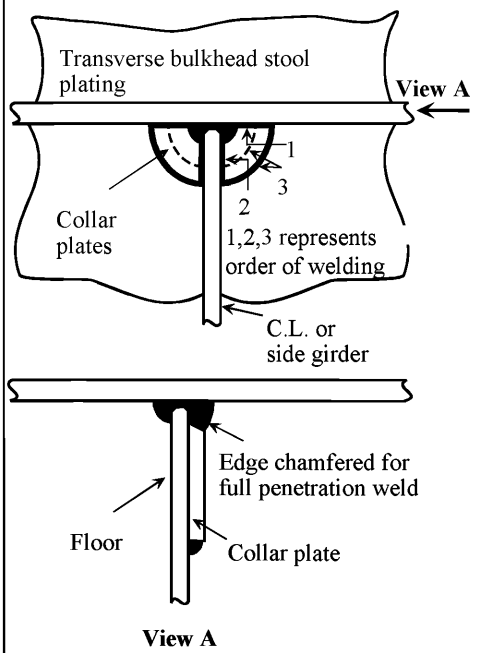

Notes on possible cause of damage

1. Stress concentration at the welds due to scallops.

Notes on repairs

1. The scallops will require to be fitted with welded collar plates to reduce stresses in the area.

BULK CARRIERS	Guidelines for Surveys, Assessment and Repair of Hull Structure	
Part 1	**Cargo hold region**	**Example No.**
Area 5	**Double bottom tank structure including hopper**	**6**
Detail of damage	Fractures and buckling in way of a cut-out for the passage of a longitudinal through a transverse primary member	

Sketch of damage

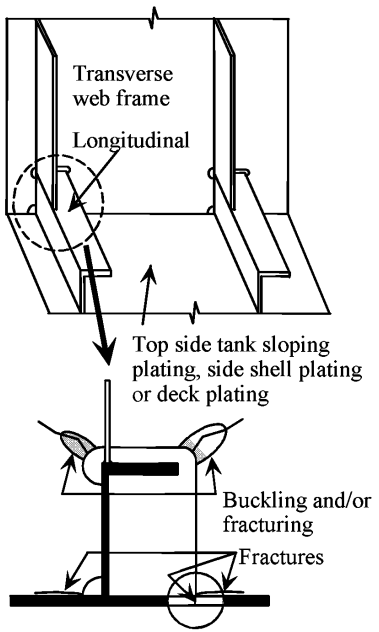

Sketch of repair

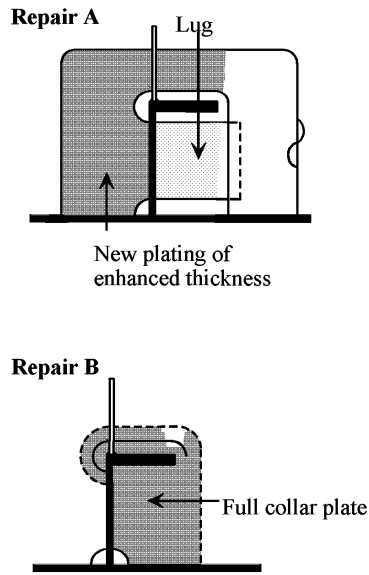

Notes on possible cause of damage

1. Damage can be caused by general levels of corrosion and presence of stress concentration associated with the presence of a cut-out.

Notes on repairs

1. If fractures are significant then crop and part renew the floor plating/transverse web otherwise the fracture can be veed-out and welded provided the plating is not generally corroded.
2. **Repair B** is to be incorporated if the lug proves to be ineffective.

BULK CARRIERS	Guidelines for Surveys, Assessment and Repair of Hull Structure	
Part 1	Cargo hold region	Example No.
Area 5	Double bottom tank structure including hopper	7
Detail of damage	Fractures in longitudinal at floor/transverse web frame or bulkhead	

Sketch of damage

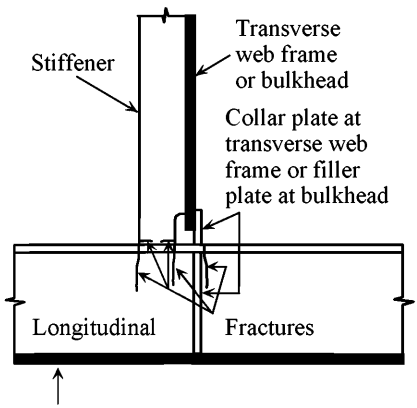

Sketch of repair

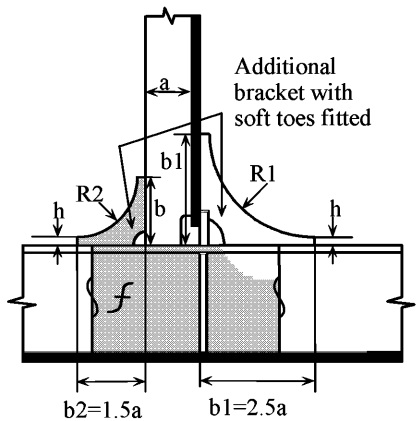

f:Where required, the longitudinal to be cropped and part renewed

1.For a slope at toes max.1:3, R1=(b1-h) x 1.6 and R2=(b2-h) x 1.6
2.Soft toe bracket to be welded first to longitudinal
3.Scallop in bracket to be as small as possible, recommended max.35mm
4.If toes of brackets are ground smooth, full penetration welds in way to be provided
5,Maximum length to thickness ratio = 50:1 for unstiffened bracket edge
6,Toe height, h, to be as small as possible (10-15mm)

Notes on possible cause of damage

1. Damage can be caused by stress concentrations leading to accelerated fatigue in this region.

Notes on repairs

1. If fractures are not extensive e.g. hairline fractures, they can be veed-out and welded.
2. If fracture extends to over one third of the depth of the longitudinal then crop and part renew.

BULK CARRIERS	Guidelines for Surveys, Assessment and Repair of Hull Structure	
Part 1	Cargo hold region	Example No.
Area 5	Double bottom tank structure including hopper	8
Detail of damage	Fractures in bottom and inner bottom longitudinals in way of inner bottom and bulkhead stool boundaries	

Sketch of damage

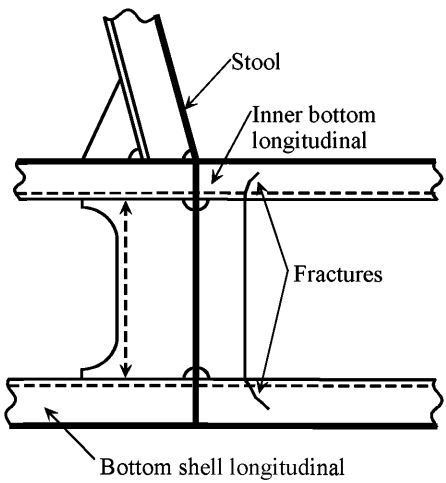

Sketch of repair

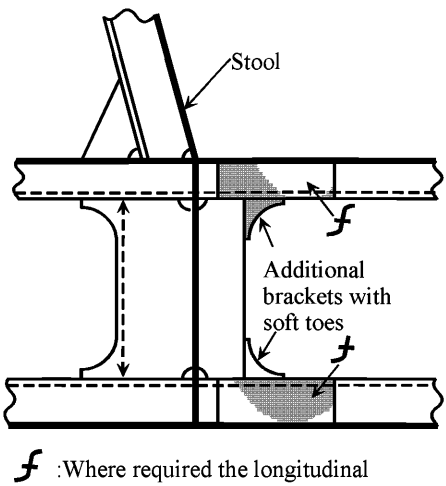

f :Where required the longitudinal to be cropped and part renewed

Notes on possible cause of damage

1. Damage can be caused by stress concentration leading to accelerated fatigue in this region.

Notes on repairs

1. If fractures are not extensive e.g. hairline fractures then these can be veed-out and welded.
2. If fracture extended to over one third of the depth of the longitudinal depth then crop and part renew.

BULK CARRIERS	Guidelines for Surveys, Assessment and Repair of Hull Structure	
Part 1	**Cargo hold region**	**Example No.**
Area 5	**Double bottom tank structure including hopper**	**9**
Detail of damage	Fractures in longitudinal in way of bilge well	

Sketch of damage

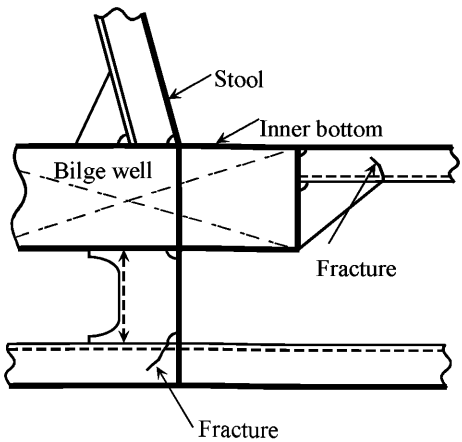

Sketch of repair

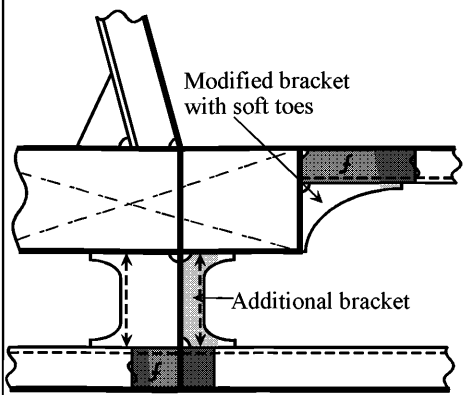

ƒ: Where required the longitudinals to be cropped and part renewed

Notes on possible cause of damage

1. Damage can be caused by stress concentrations leading to accelerated fatigue in this region.

Notes on repairs

1. If fractures are not extensive e.g. hairline fractures then these can be veed-out and welded.
2. If the fracture extended to over one third of the depth of the longitudinal then crop and part renew.

BULK CARRIERS	Guidelines for Surveys, Assessment and Repair of Hull Structure	
Part 1	Cargo hold region	Example No.
Area 5	Double bottom tank structure including hopper	10
Detail of damage	Buckling of transverse web	

Sketch of damage

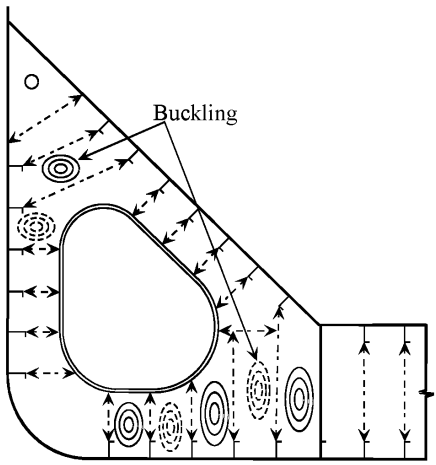

Sketch of repair

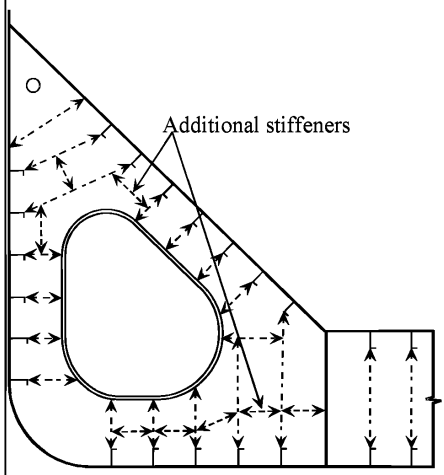

Notes on possible cause of damage

1. Insufficient buckling strength of transverse web plating.
2. Corrosion of high stress area.

Notes on repairs

1. If the buckling occurred without significant corrosion, adequate reinforcement is to be carried out.
2. If the buckling occurred due to corrosion of high stress (shear stress) area, damaged area is to be cropped and part renewed. Adequate reinforcement and protective measures should be considered.

BULK CARRIERS	Guidelines for Surveys, Assessment and Repair of Hull Structure	
Part 1	**Cargo hold region**	**Example No.**
Area 5	**Double bottom tank structure including hopper**	**11**
Detail of damage	Fractures at weld connection of transverse brackets	

Sketch of damage

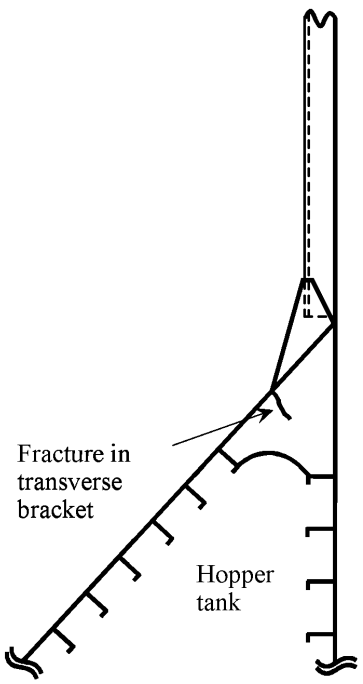

Sketch of repair

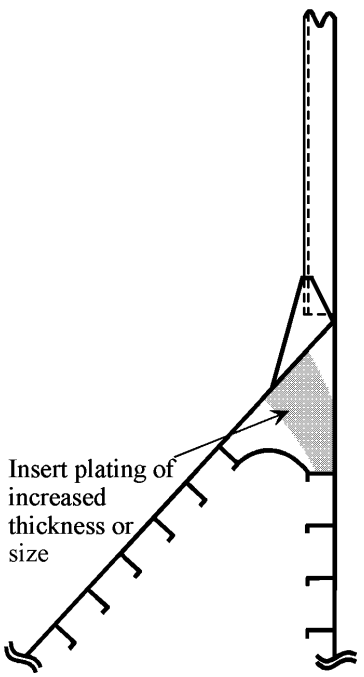

Notes on possible cause of damage

1. General levels of corrosion and presence of stress concentration.
2. Misalignment of the brackets with adjoining structure e.g. frame brackets.
3. High shear stresses due to insufficient bracket.
4. Inadvertent overloading.

Notes on repairs

1. If the damage is caused by misalignment with the frame bracket above, the misalignment is to be rectified.
2. Replacement by a bracket of increased thickness or size should be considered.

BULK CARRIERS	Guidelines for Surveys, Assessment and Repair of Hull Structure	
Part 1	Cargo hold region	Example No.
Area 5	Double bottom tank structure including hopper	12
Detail of damage	Fractures in bottom shell/side shell/hopper sloping plating at the corner drain hole/air hole in longitudinal	

Sketch of damage

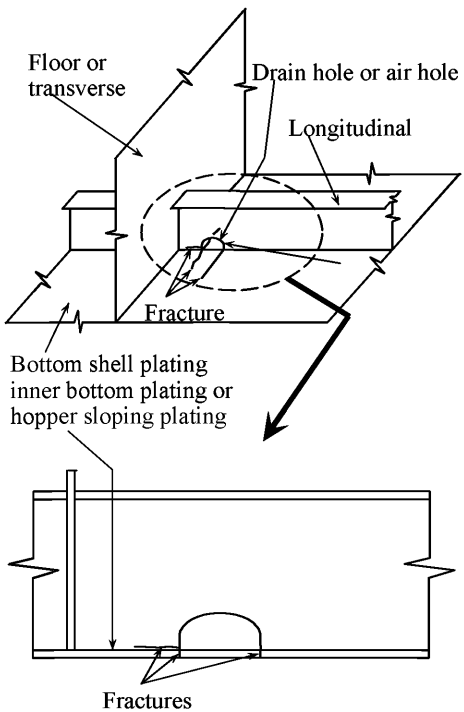

Sketch of repair

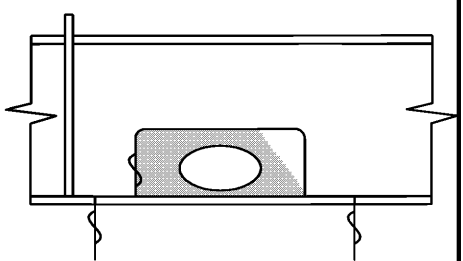

Notes on possible cause of damage

1. Stress concentration and/or corrosion due to stress concentration at the corner of drain hole/air hole.

Notes on repairs

1. Fractured plating should be cropped and part renewed.
2. If fatigue life is to be improved, change of drain hole/air hole shape is to be considered.

BULK CARRIERS	Guidelines for Surveys, Assessment and Repair of Hull Structure	
Part 1	**Cargo hold region**	**Example No.**
Area 5	**Double bottom tank structure including hopper**	**13**
Detail of damage	Fractures in bottom plating along side girder and/or bottom longitudinal	

Sketch of damage

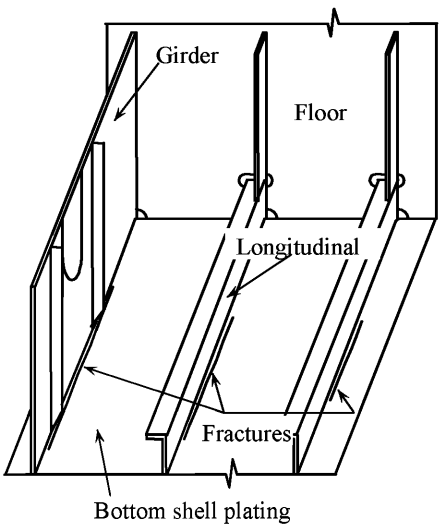

Sketch of repair

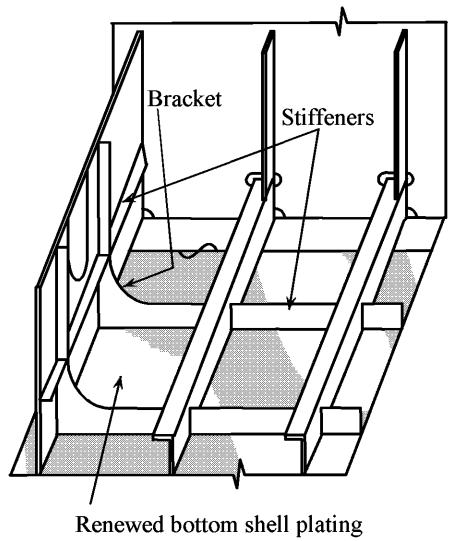

Notes on possible cause of damage

1. Vibration.

Notes on repairs

1. Fractured bottom shell plating should be cropped and renewed.
2. Natural frequency of the panel should be changed, e.g. reinforcement by additional stiffener/bracket.

BULK CARRIERS	Guidelines for Surveys, Assessment and Repair of Hull Structure	
Part 1	Cargo hold region	Example No.
Area 5	Double bottom tank structure including hopper	14
Detail of damage	Corrosion in bottom plating below suction head	

Sketch of damage

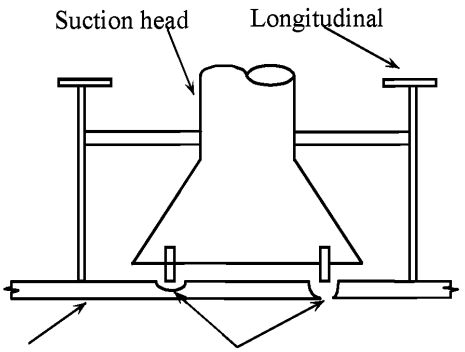

Sketch of repair

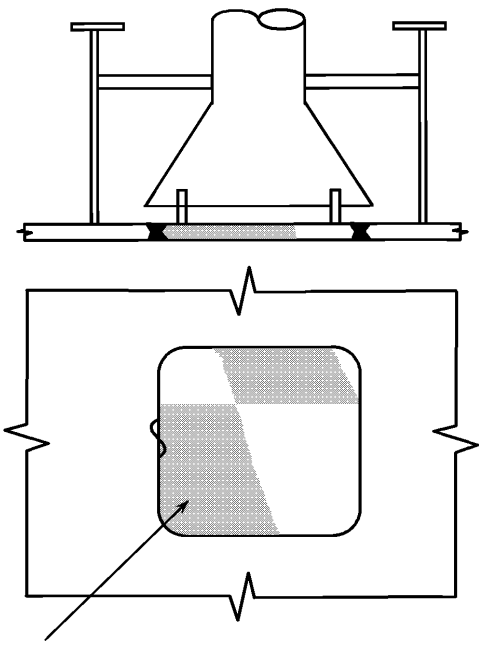

1. Insert to have round corners
2. Non-destructive examination to be applied after welding based on the Society's rules

Notes on possible cause of damage

1. High flow rate associated with insufficient corrosion prevention system.
2. Galvanic action between dissimilar metals.

Notes on repairs

1. Affected plating should be cropped and part renewed. Thicker plate and suitable beveling should be considered.
2. If the corrosion is limited to a small area,
   i. e. pitting corrosion, repair by welding is acceptable.

BULK CARRIERS	Guidelines for Surveys, Assessment and Repair of Hull Structure	
Part 1	**Cargo hold region**	**Example No.**
Area 5	**Double bottom tank structure including hopper**	**15**
Detail of damage	Corrosion in bottom plating below sounding pipe	

Sketch of damage

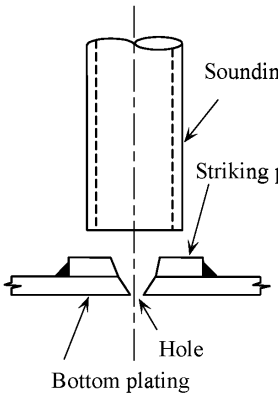

Sketch of repair

Repair A

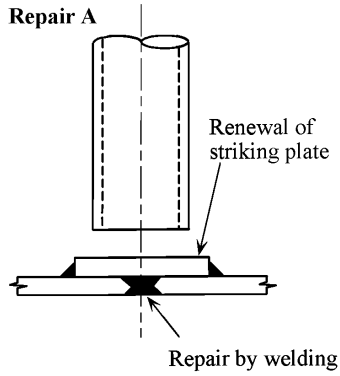

Repair B

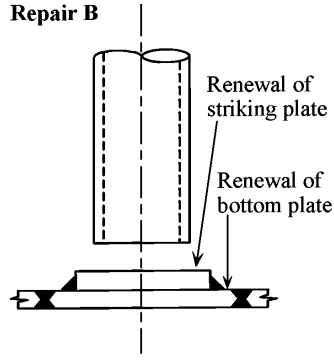

Notes on possible cause of damage

1. Accelerated corrosion of striking plate by the striking of the weight of the sounding tape.

Notes on repairs

1. Corroded bottom plating should be welded or partly cropped and renewed if considered necessary.
2. Corroded striking plate should be renewed.

BULK CARRIERS	Guidelines for Surveys, Assessment and Repair of Hull Structure	
Part 1	Cargo hold region	Example No.
Area 5	Double bottom structure including hopper	16
Detail of damage	Deformation of forward bottom shell plate due to slamming	

Sketch of damage

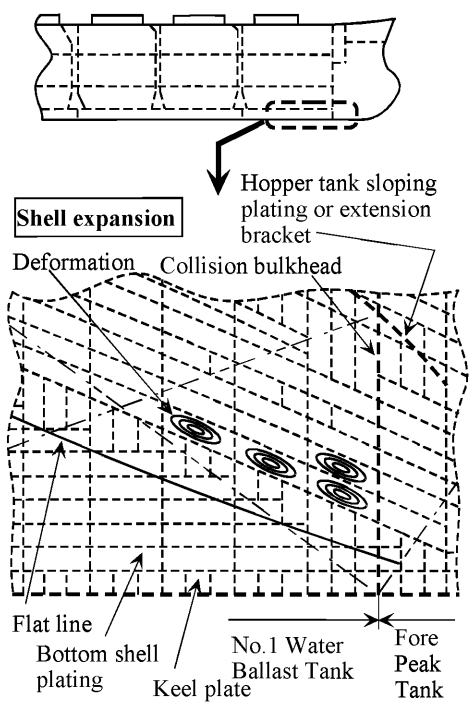

Sketch of repair

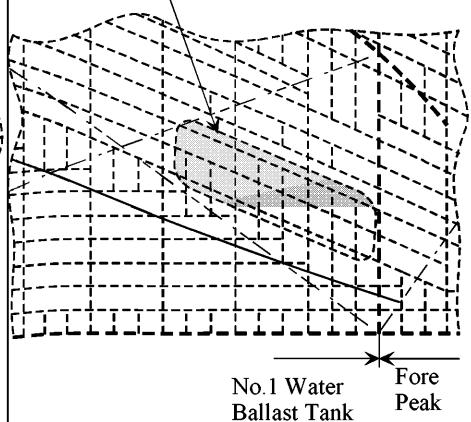

Notes on possible cause of damage

1. Heavy weather.
2. Poor design for slamming.
3. Poor operation, i.e. negligence of heavy ballast.

Notes on repairs

1. Deformed bottom shell plating should be faired in place, or partly cropped and renewed if considered necessary.
2. Bottom shell plating should be reinforced by stiffeners.

BULK CARRIERS	Guidelines for Surveys, Assessment and Repair of Hull Structure	
Part 1	**Cargo hold region**	**Example No.**
Area 5	**Double bottom structure including hopper**	**17**
Detail of damage	Fractures in shell plating at the termination of bilge keel	

Sketch of damage

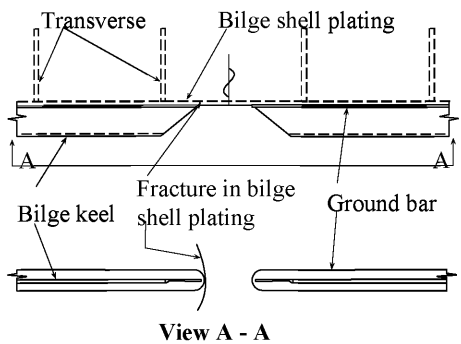

View A - A

Sketch of repair

Repair A

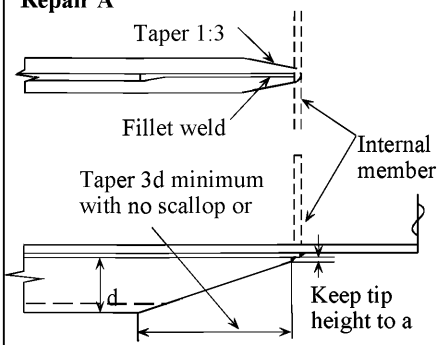

Repair B

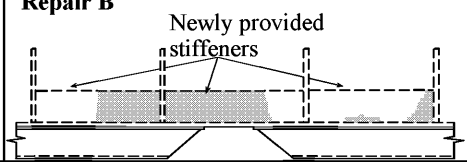

Notes on possible cause of damage

1. Poor design causing stress concentration.

Notes on repairs

1. Fractured plating is to be cropped and renewed.
2. Reduction of stress concentration of the bilge keel end should be considered.
   Repair A: Modification of the detail of end
   Repair B: New internal stiffeners
   Repair C: Continuous ground bar (in connection with **Repair A**)
3. Instead of **Repair A** or **B** continuous ground bar and bilge keel should be considered.

Part 2 Fore and aft end regions

Contents

Area 1 Fore end structure
Area 2 Aft end structure
Area 3 Stern frame, rudder arrangement and propeller shaft supports

Area 1 Fore End Structure

Contents

1 General

2 What to look for
2.1 Material wastage
2.2 Deformations
2.3 Fractures

3 General comments on repair
3.1 Material wastage
3.2 Deformations
3.3 Fractures

Figures and/or Photographs - Area 1	
No.	**Title**
Figure 1	Fore end structure - Potential problem areas

Examples of structural detail failures and repairs - Area 1	
Example No.	**Title**
1	Deformation of forecastle deck
2	Fractures in forecastle deck plating at bulwark
3	Fractures in side shell plating in way of chain locker
4	Deformation of side shell plating in way of forecastle space
5	Fracture and deformation of bow transverse web in way of cut-outs for side longitudinals
6	Fractures at toe of web frame bracket connection to stringer platform bracket

1 General

1.1 Due to the high humidity salt water environment, wastage of the internal structure in the fore peak ballast tank can be a major problem for many, and in particular ageing ships. Corrosion of structure may be accelerated where the tank is not coated or where the protective coating has not been properly maintained, and can lead to fracture~~s~~ of the internal structure and the tank boundaries.

1.2 Deformation can be caused by contact which can result in damage to the internal structure leading to fractures in the shell plating.

1.3 Fracture~~s~~ of internal structure in the fore peak tank and spaces ~~can~~ also result from wave impact load due to slamming and panting.

1.4 Forecastle structure is exposed to green water and can suffer~~s~~ damage such as deformation of deck structure, deformation and fracture of bulwarks and collapse of mast~~,~~ etc.

1.5 Shell plating around anchor and hawse pipe may suffer corrosion, deformation and possible fracture due to movement of improperly stowed anchor.

2 What to look for

2.1 Material wastage

2.1.1 Wastage (and possible subsequent fractures) is more likely to be initiated at the locations as indicated in **Figure 1** and particular attention should be given to these areas. A close-up inspection should be carried out with selection of representative thickness measurements to determine the extent of corrosion.

2.1.2 Structure in chain locker is liable to have heavy corrosion due to mechanical damage of ~~to~~ the protective coating caused by the action of anchor chains. In some ships, especially smaller ships, the side shell plating may form boundaries of the chain locker and heavy corrosion may consequently result in holes in the side shell plating.

2.2 Deformations

2.2.1 Contact with quay sides and other objects can result in large deformations and fractures of the internal structure. This may affect the watertight integrity of the tank boundaries and collision bulkhead. A close-up examination of the damaged area should be carried out to determine the extent of the damage.

2.3 Fractures

2.3.1 Fractures in the fore peak tank are normally found by close-up inspection of the internal structure.

2.3.2 Fractures are often found in transition region and reference should be made to **Part 1**, **Area 2** and **3**.

2.3.3 Fractures that extend through the thickness of the plating or through the boundary welds may be observed during pressure testing of tanks.

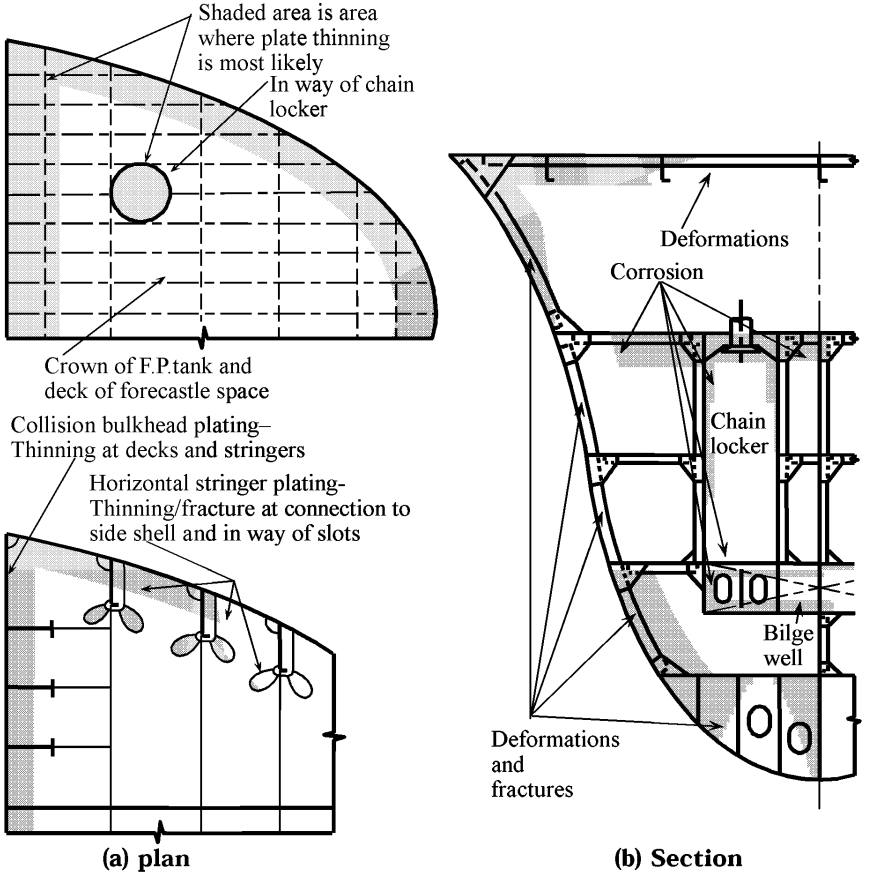

Fig 1 Fore end structure - Potential problem areas

3 General comments on repair

3.1 Material wastage

3.1.1 The extent of steel renewal required can be established based on representative thickness measurements. Where part of the structure has deteriorated to the permissible minimum thickness, then the affected area is to be cropped and renewed. Repair work in tanks requires careful planning in terms of accessibility.

3.2 Deformations

3.2.1 Deformed structure caused by contact should be cropped and part renewed or faired in place depending on the nature and extent of damage.

3.3 Fractures

3.3.1 Fractures of a minor nature may be veed-out and rewelded. Where cracking is more extensive, the structure is to be cropped and renewed. In the case of fractures caused by sea loads, increased thickness of plating and/or design modification to reduce stress concentrations should be considered (See **Examples 1**, **2** and **6**).

BULK CARRIERS	Guidelines for Surveys, Assessment and Repair of Hull Structure	
Part 2	Fore and aft end regions	Example No.
Area 1	Fore end structure	1
Detail of damage	Deformation of forecastle deck	

Sketch of damage

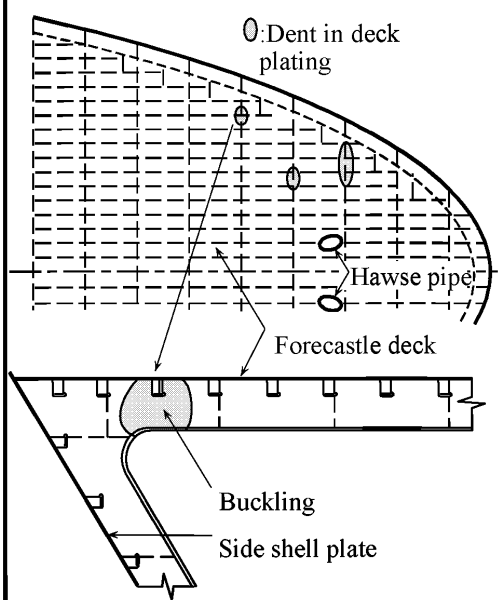

Sketch of repair

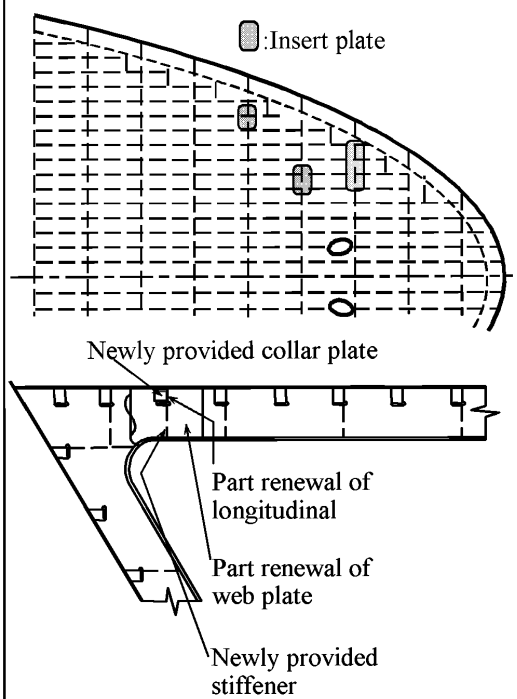

Notes on possible cause of damage

1. Green sea on deck.
2. Insufficient strength.

Notes on repairs

1. Deformed structure should be cropped and renewed.
2. Additional stiffeners on web of beam should be considered for reinforcement.

BULK CARRIERS	Guidelines for Surveys, Assessment and Repair of Hull Structure	
Part 2	Fore and aft end regions	Example No.
Area 1	Fore end structure	2
Detail of damage	Fractures in forecastle deck plating at bulwark	

Sketch of damage

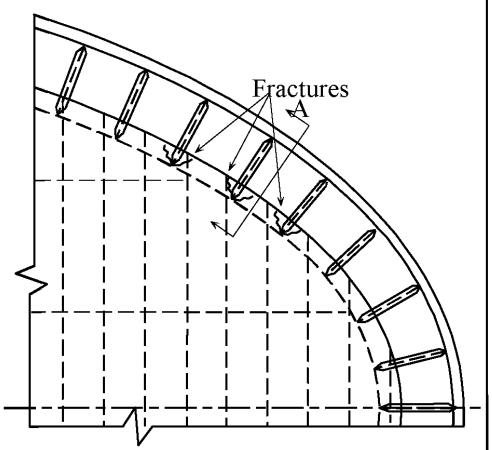

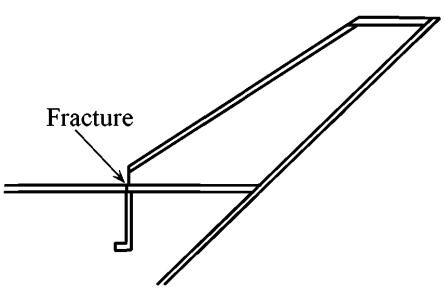

View A - A

Sketch of repair

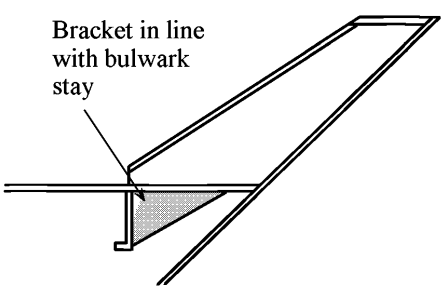

View A - A

Notes on possible cause of damage

1. Bow flare effect in heavy weather.
2. Stress concentration due to poor design.

Notes on repairs

1. Fractured deck plating should be cropped and renewed.
2. Bracket in line with the bulwark stay to be fitted to reduce stress concentration.

BULK CARRIERS	Guidelines for Surveys, Assessment and Repair of Hull Structure	
Part 2	Fore and aft end regions	Example No.
Area 1	Fore end structure	3
Detail of damage	Fractures in side shell plating in way of chain locker	

Sketch of damage

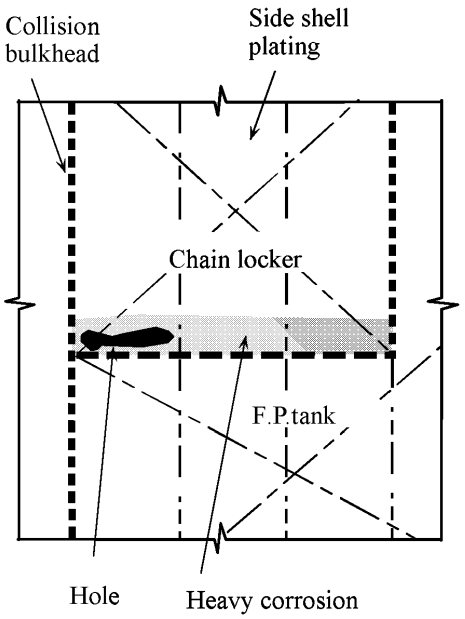

ketch of repair

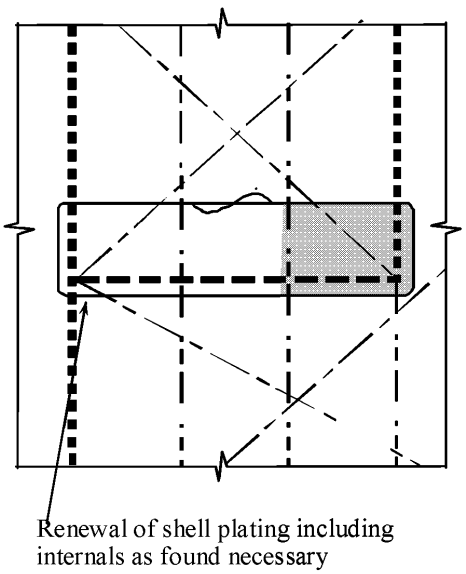

Notes on possible cause of damage

1. Heavy corrosion in region where mud is accumulated.

Notes on repairs

1. Corroded plating should be cropped and renewed.
2. Protective coating should be applied.

BULK CARRIERS	Guidelines for Surveys, Assessment and Repair of Hull Structure	
Part 2	Fore and aft end regions	Example No.
Area 1	Fore end structure	4
Detail of damage	Deformation of side shell plating in way of forecastle space	

Sketch of damage

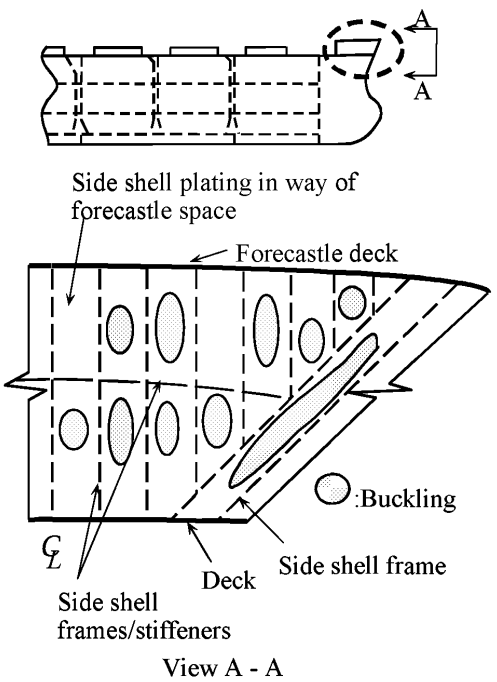

Sketch of repair

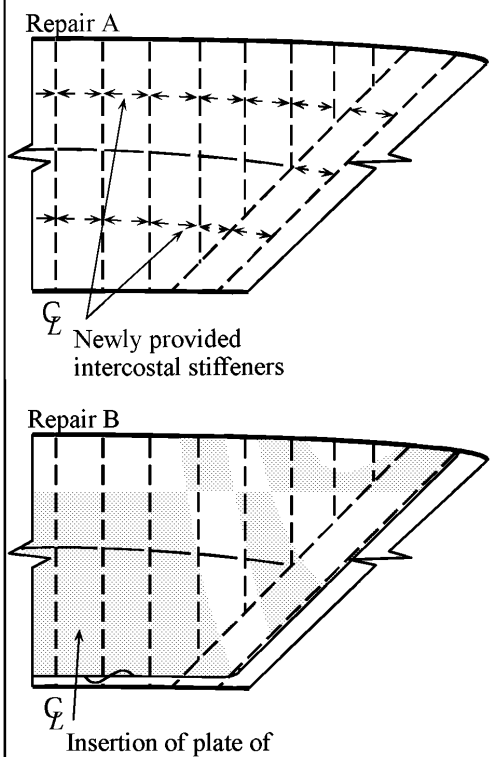

Notes on possible cause of damage

1. Heavy weather.
2. Insufficient strength.

Notes on repairs

1. Deformed part should be cropped and part renewed.
2. **Repair A**
   Additional stiffeners between existing stiffeners should be considered.
   Repair B
   Insertion of plate of increased thickness with additional stiffeners.

BULK CARRIERS	Guidelines for Surveys, Assessment and Repair of Hull Structure	
Part 2	Fore and aft end regions	Example No.
Area 1	Fore end structure	5
Detail of damage	Fracture and deformation of bow transverse web in way of cut-outs for side longitudinals	

Sketch of damage

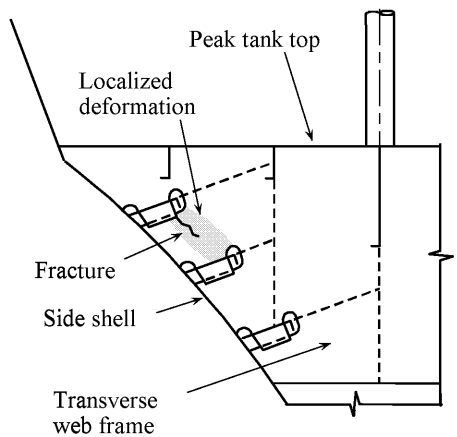

Sketch of repair

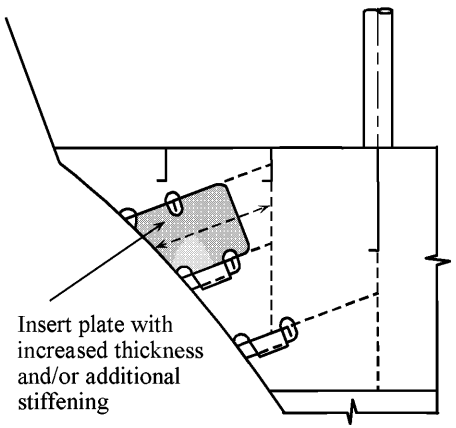

Notes on possible cause of damage

1. Localized material wastage in way of coating failure at cut-outs and sharp edges due to working of the structure.
2. Dynamic seaway loading in way of bow flare.

Notes on repairs

1. Sufficient panel strength to be provided to absorb the dynamic loads enhanced by bow flare shape.

BULK CARRIERS	Guidelines for Surveys, Assessment and Repair of Hull Structure	
Part 2	Fore and aft end regions	Example No.
Area 1	Fore end structure	6
Detail of damage	Fractures at toe of web frame bracket connection to stringer platform bracket	

Sketch of damage

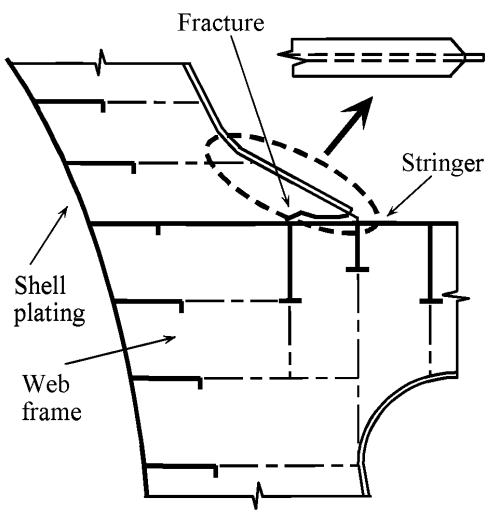

ketch of repair

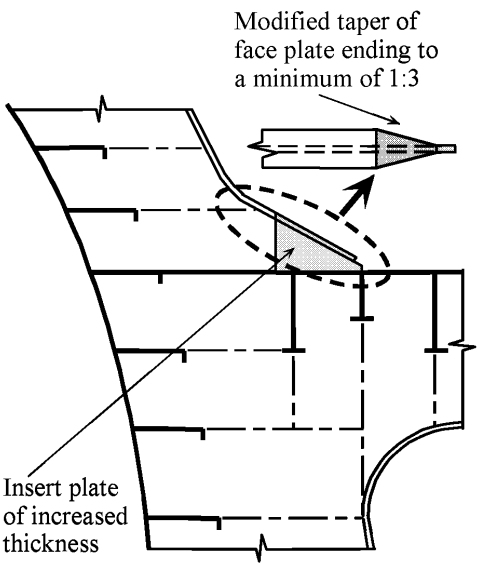

Notes on possible cause of damage

1. Inadequate bracket forming the web frame connection to the stringer.
2. Localized material wastage in way of coating failure at bracket due to flexing of the structure.
3. Dynamic seaway loading in way of bow flare.

Notes on repairs

1. Adequate soft nose bracket endings with a face plate taper of at least 1 : 3 to be provided.

Area 2 Aft end structure

Contents

1 General

2 What to look for
2.1 Material wastage
2.2 Deformations
2.3 Fractures

3 General comments on repair
3.1 Material wastage
3.2 Deformations
3.3 Fractures

Figures and/or Photographs - Area 2	
No.	**Title**
Figure 1	Aft end structure - Potential problem areas

Examples of structural detail failures and repairs - Area 2	
Example No.	**Title**
1	Fractures in longitudinal bulkhead in way of rudder trunk
2	Fractures at the connection of floors and girder/side brackets
3-a	Fractures in flat where rudder carrier is installed in steering gear room
3-b	Fractures in steering gear foundation brackets and deformed deck plate

1 General

1.1 Due to the high humidity salt water environment, wastage of the internal structure in the aft peak ballast tank can be a major problem for many, and in particular ageing, ships. Corrosion of structure may be accelerated where the tank is not coated or where the protective coating has not been properly maintained, and can lead to fractures of the internal structure and the tank boundaries.

1.1 Deformation can be caused by contact or wave impact action from astern (which can result in damage to the internal structure leading to fractures in the shell plating.

1.3 Fractures to the internal structure in the aft peak tank and spaces can also result from main engine and propeller excited vibration.

2 What to look for

2.1 Material wastage

2.1.1 Wastage (and possible subsequent fractures) is more likely to be initiated at in the locations as indicated in **Figure 1**. A close-up inspection should be carried out with selection of representative thickness measurements to determine the extent of corrosion. Particular attention should be given to bunker tank boundaries and spaces adjacent to heated engine room.

2.2 Deformations

2.2.1 Contact with quay sides and other objects can result in large deformations and fractures of the internal structure. This may affect the watertight integrity of the tank boundaries and bulkheads. A close-up examination of the deformed area should be carried out to determine the extent of the damage.

2.3 Fractures

2.3.1 Fractures in weld at floor connections and other locations in the aft peak tank and rudder trunk space can normally only be found by close-up inspection.

2.3.2 The structure supporting the rudder carrier may fracture and/or deform due to excessive load on the rudder. Bolts connecting the rudder carrier to the steering gear flat may also suffer damage under such load.

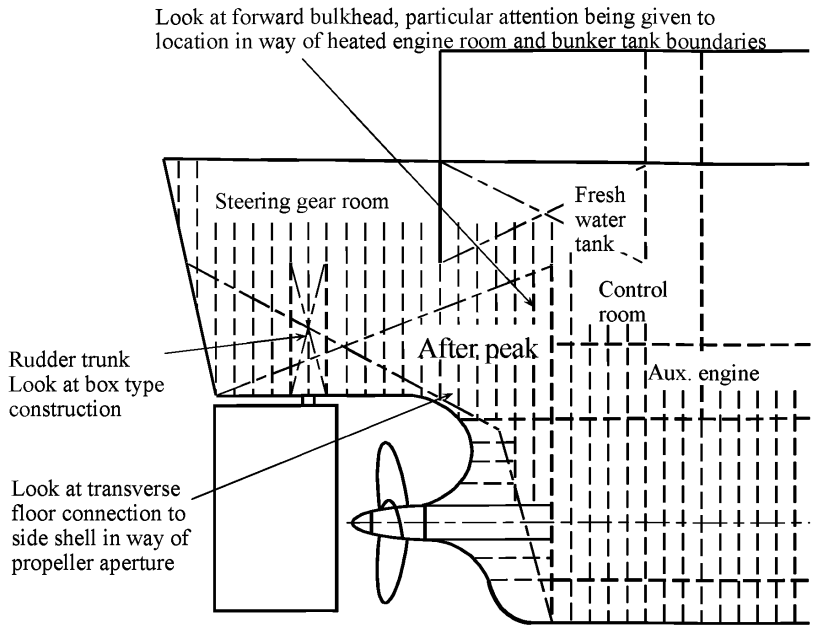

Figure 1 Aft end structure - Potential problem areas

3 General comments on repair

3.1 Material wastage

3.1.1 The extent of steel renewal required can be established based on representative thickness measurements. Where part of the structure has deteriorated to the permissible minimum thickness, then the affected area is to be cropped and renewed. Repair work in tanks requires careful planning in terms of accessibility.

3.2 Deformations

3.2.1 Deformed structure caused by contact should be cropped and part renewed or faired in place depending on the extent of damage.

3.3 Fractures

3.3.1 Fractures of a minor nature may be veed-out and rewelded. Where cracking is more extensive, the structure is to be cropped and renewed.

3.3.2 In order to prevent recurrence of damages suspected to be caused by main engine or propeller excited vibration, the cause of the vibration should be ascertained and additional reinforcements provided as found necessary (See **Examples 1** and **2**).

3.3.3 In the case of fractures caused by sea loads, increased thickness of plating and/or design modifications to reduce stress concentrations should be considered.

3.3.4 Fractured structure which supports rudder carrier is to be cropped, and renewed, and may have to be reinforced (See **Examples 3-a** and **3-b**).

BULK CARRIERS	Guidelines for Surveys, Assessment and Repair of Hull Structure	
Part 2	**Fore and aft end regions**	**Example No.**
Area 2	**Aft end structure**	**1**
Detail of damage	Fractures in bulkhead in way of rudder trunk	

Sketch of damage

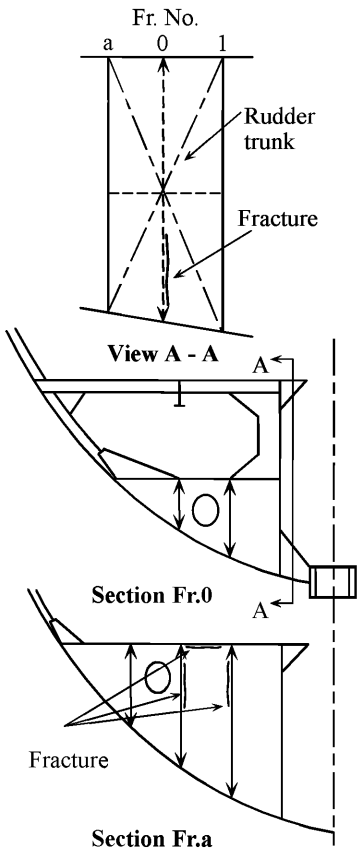

Sketch of repair

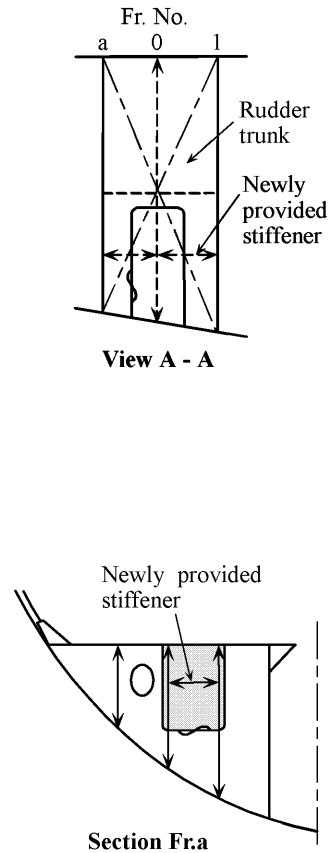

Notes on possible cause of damage

1. Vibration.

Notes on repairs

1. The fractured plating should be cropped and renewed.
2. Natural frequency of the plate between stiffeners should be changed, e.g. reinforcement by additional stiffeners.

BULK CARRIERS	Guidelines for Surveys, Assessment and Repair of Hull Structure	
Part 2	**Fore and aft end regions**	**Example No.**
Area 2	**Aft end structure**	**2**
Detail of damage	Fractures at the connection of floors and girders/side brackets	

Sketch of damage

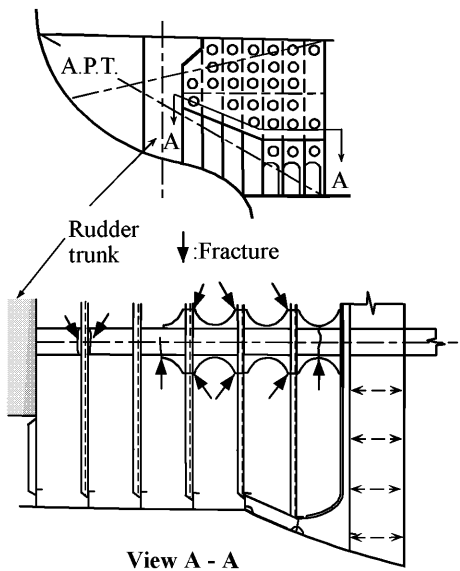

View A - A

Sketch of repair

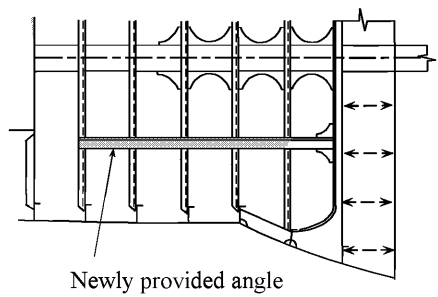

Notes on possible cause of damage

1. Vibration.

Notes on repairs

1. The fractured plating should be cropped and renewed.
2. Natural frequency of the panel should be changed, e.g. reinforcement by additional strut.

BULK CARRIERS	Guidelines for Surveys, Assessment and Repair of Hull Structure	
Part 2	Fore and aft end regions	Example No.
Area 2	Aft end structure	3-a
Detail of damage	Fractures in flat where rudder carrier is installed in steering gear room	

Sketch of damage

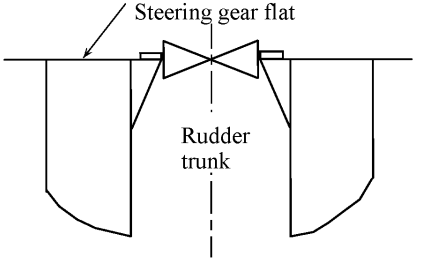

View A - A

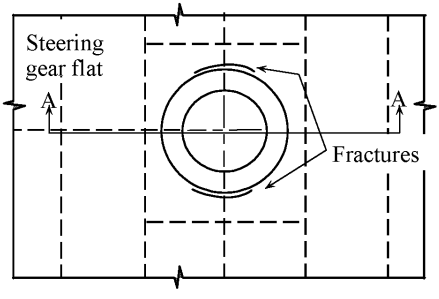

Sketch of repair

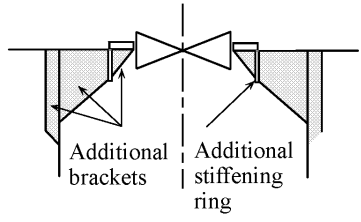

View B - B

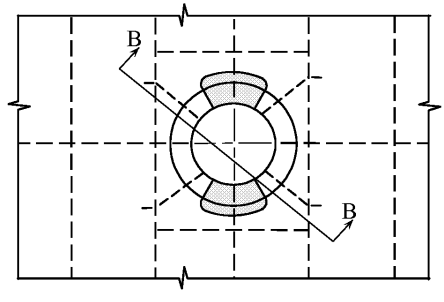

Notes on possible cause of damage

1. Inadequate design.

Notes on repairs

1. Fractured plating should be cropped and renewed.
2. Additional brackets and stiffening ring should be fitted for reinforcement.

BULK CARRIERS	Guidelines for Surveys, Assessment and Repair of Hull Structure	
Part 2	**Fore and aft end regions**	**Example No.**
Area 2	**Aft end structure**	**3-b**
Detail of damage	Fractures in steering gear foundation brackets and deformed deck plate	

Sketch of damage

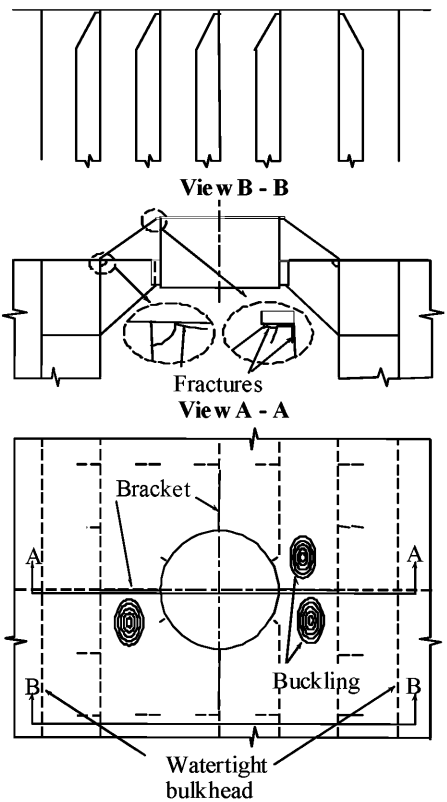

Sketch of repair

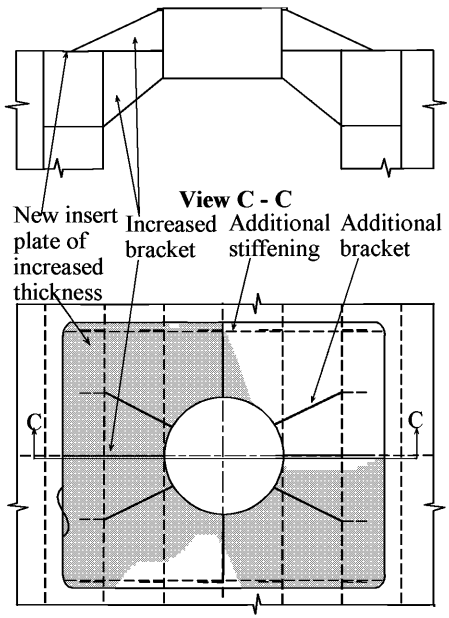

Notes on possible cause of damage

1. Insufficient deck strengthening (missing base plate).
2. Insufficient strengthening of steering gear foundation.
3. Bolts of steering gear were not sufficiently pre-loaded.

Notes on repairs

1. New insert base plate of increased plate thickness.
2. Additional longitudinal stiffening at base plate edges.
3. Additional foundation brackets above and under deck (star configuration).

Area 3 Stern frame, rudder arrangement and propeller shaft support

Contents

1 General

2 What to look for - Drydock inspection
2.1 Deformation
2.2 Fractures
2.3 Corrosion/Erosion/Abrasion

3 General comments on repair
3.1 Rudder stock and pintles
3.2 Plate structure
3.3 Abrasion of bush and sleeve
3.4 Assembling of rudders
3.5 Repair of propeller boss and stern tube

Figures and/or Photographs - Area 3	
No.	**Title**
Figure 1	Nomenclature for stern frame, rudder arrangement and propeller shaft support
Figure 2	Potential problem areas
Photograph 1	Fractured rudder
Figure 3	Rudder stock repair by welding
Diagram 1	Preheating temperature

Examples of structural detail failures and repairs - Area 3	
Example No.	**Title**
1	Fractures in rudder horn along bottom shell plating
2	Fractures in rudder stock
3	Fractures in connection of palm plate to rudder blade
4	Fractures in rudder plating of semi-spade rudder (short fractures with end located forward of the vertical web)
5	Fractures in rudder plating of semi-spade rudder extending beyond the vertical web
6	Fractures in rudder plating of semi-spade rudder in way of pintle cutout
7	Fractures in side shell plating at the connection to propeller boss
8	Fractures in stern tube at the connection to stern frame

1 General

1.1 The stern frame, possible strut bearing arrangement and connecting structures are exposed to propeller induced vibrations, which may lead to fatigue cracking in areas where stress concentrations occur.

1.2 The rudder and rudder horn are exposed to accelerated and fluctuating stream from the propeller, which may also lead to fatigue cracking in areas where stress concentrations occur.

1.3 In extreme weather conditions the rudder may suffer wave slamming forces causing deformations of rudder stock and rudder horn as well as of the rudder itself.

1.4 Rudder and rudder horn as well as struts (on shafting arrangement with strut bearings) may also come in contact with floating object such as timber-log or ice causing damages similar to those described in **1.3**.

1.5 Since different materials are used in adjacent compartments and structures, accelerated (galvanic) corrosion may occur if protective coating and/or sacrificial anodes are not maintained properly.

1.6 Pre-existing manufacturing internal defects in cast pieces may lead to fatigue cracking.

1.7 A summary of potential problem areas is shown in **Figure 2**.

1.8 A complete survey of the rudder arrangement is only possible in drydock. However, in some cases a survey including a damage survey can be carried out afloat by divers or with a trimmed ship.

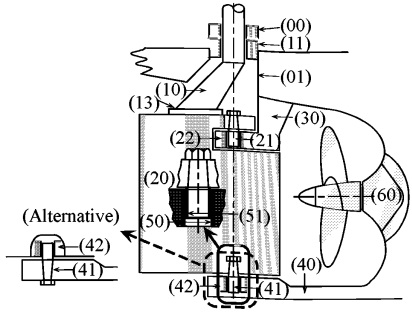

(a) Rudders supported by sole piece

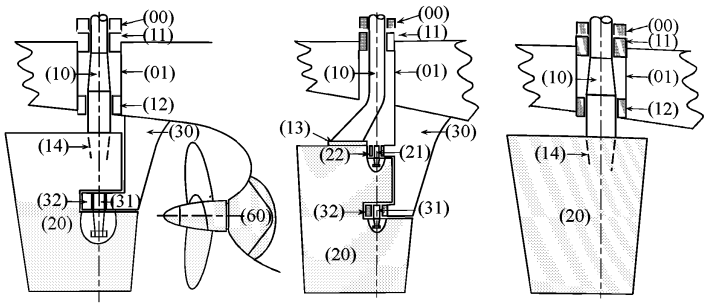

(b) Semi-spade rudders (c) Spade rudder

Nomenclature

(00)Rudder carrier (01)Rudder trunk (10)Rudder stock (11)Carrier bearing
(12)Neck bearing (13)Horizontal coupling(Flange coupling) (14)Cone coupling
(20)Rudder blade (21)Upper pintle (22)Upper pintle bearing
(30)Rudder horn (31)Horn pintle (32)Horn pintle bearing
(40)Sole piece (41)Bottom pintle (42)Bottom pintle bearing
(50)Bush (51)Sleeve(Liner)
(60)Propeller boss(Stern tube casting) (70)Propeller shaft bracket(Tail shaft strut)

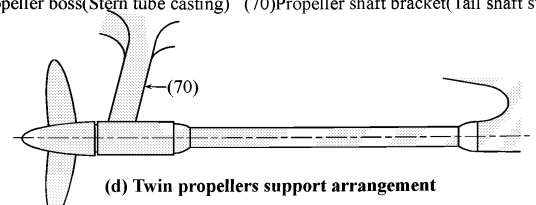

(d) Twin propellers support arrangement

Figure 1 Nomenclature for stern frame, rudder arrangement and propeller shaft support

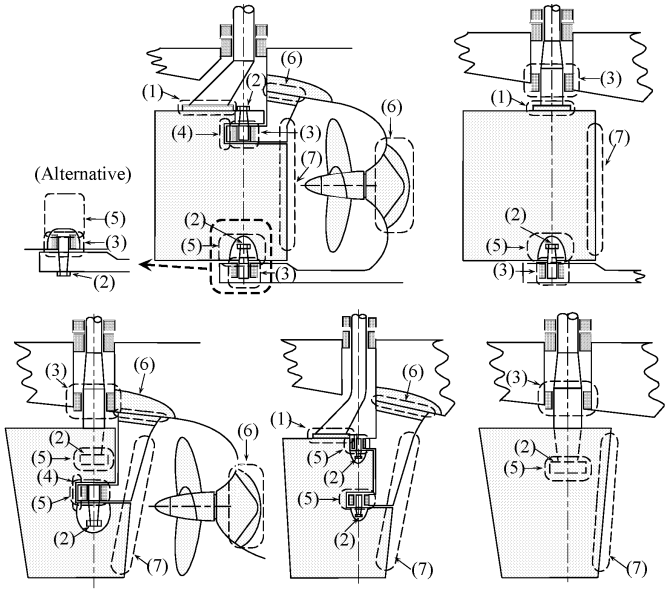

Damage to look for:
(1)Fractures and loose coupling bolts
(2)Loose nut
(3)Wear(excessive bearing clearance)
(4)Fractures in way of pintle cutout
(5)Fractures in way of removable access plate
(6)Fractures
(7)Erosion

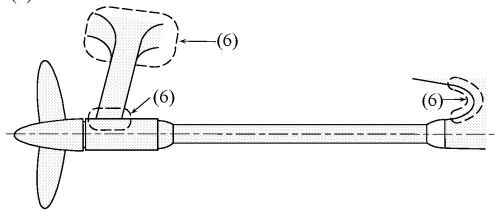

Figure 2 Potential problem areas

2 What to look for - Drydock inspection

2.1 Deformations

2.1.1 Rudder blade, rudder stock, rudder horn and propeller boss/brackets have to be checked for deformations.

2.1.2 Indications of deformation of rudder stock/rudder horn could be found by excessive clearance.

2.1.3 Possible twisting deformation or slipping of cone connection can be observed by the difference in angle between rudder and tiller.

2.1.4 If bending or twisting deformation is found, the rudder has to be dismounted for further inspection.

2.2 Fractures

2.2.1 Fractures in rudder plating should be looked for at slot welds, welds of removable part to the rudder blade, and welds of the access plate in case of vertical cone coupling between rudder blade and rudder stock and/or pintle. Such welds may have latent defects due to the limited applicable welding procedure. Serious fractures in rudder plating may cause loss of rudder.

2.2.2 Fractures should be looked for at weld connection between rudder horn, propeller boss and propeller shaft brackets, and stern frame.

2.2.3 Fractures should be looked for at the upper and lower corners in way of the pintle recess in case of semi-spade rudders. Typical fractures are shown in **Examples 3** to **5**.

2.2.4 Fractures should be looked for at the transition radius between rudder stock and horizontal coupling (palm) plate, and the connection between horizontal coupling plate and rudder blade in case of horizontal coupling. Typical fractures are shown in **Examples 1** and **2**. Fatigue fractures should be looked for at the palm plate itself in case of loosened or lost coupling bolts.

2.2.5 Fractures should be looked for in the rudder plating in way of the internal stiffening structures since (resonant) vibrations of the plating may have occurred.

2.2.6 If the rudder stock is deformed, fractures should be looked for in rudder stock by nondestructive examinations before commencing repair measures, in particular in and around the keyway, if any.

2.3 Corrosion/Erosion/Abrasion

2.3.1 Corrosion/erosion (such as deep pitting corrosion) should be looked for in rudder/rudder horn plating, especially in welds. In extreme cases the corrosion /erosion may cause a large fracture as shown in **Photograph**

1.

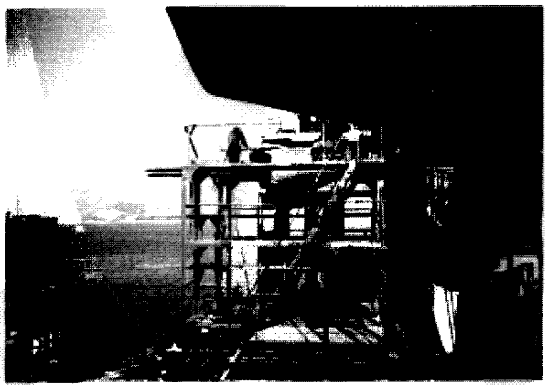

Photograph 1
Fractured rudder

2.3.2 The following should be looked for on rudder stock and pintle:
- Excessive clearance between sleeve and bush of rudder stock/pintle beyond the allowable limit specified by the Classification Society.
- Condition of sleeve. If the sleeve is loose, ingress of water may have caused corrosion.
- Deep pitting corrosion in the rudder stock and pintle adjacent to the stainless steel sleeve.
- Slipping of rudder stock cone coupling. For a vertical cone coupling with hydraulic pressure connection, sliding of the rudder stock cone in the cast piece may cause severe surface damages.
- Where a stainless steel liner/sleeve/cladding for the pintle/rudder stock is fitted into a stainless steel bush, an additional check should be made for crevice corrosion.

3 General comments on repair

3.1 Rudder stock and pintles

3.1.1 If rudder stock is twisted due to excessive forces such as contact or grounding and has no additional damages (fractures etc.) or other significant deformation, the stock usually can be used. The need for repair or heat treatment of the stock will depend on the amount of twist in the stock according to the requirements of the Classification Society. The keyway, if any, has to be milled in a new position.

3.1.2 Rudder stocks with bending deformations, not having any fractures may be repaired depending on the size of the deformation either by warm or by cold straightening in an approved workshop according to a procedure approved by the Classification Society. In case of warm straightening, as a guideline, the temperature should usually not exceed the heat treatment temperature of 530-580°C.

3.1.3 In case of fractures on a rudder stock with deformations, the stock may be used again depending on the nature and extent of the fractures. If a welding repair is considered acceptable, the fractures are to be removed by machining/grinding and the welding is to be based on an approved welding procedure together with post weld heat treatment as required by the Classification Society.

3.1.4 Rudder stocks and/or pintles may be repaired by welding replacing wasted material by similar weld material provided its chemical composition is suitable for welding, i.e. the carbon content must usually not exceed 0.25%. The welding procedures are to be identified in function of the carbon equivalent (Ceq). After removal of the wasted area (corrosion, scratches, etc.) by machining and/or grinding the build-up welding has to be carried out by an automatic spiral welding according to an approved welding procedure. The welding has to be extended over the area of large bending moments (rudder stocks). In special cases post weld heat treatment has to be carried out according to the requirements of the Classification Society. After final machining, a sufficient number of layers of welding material have to remain on the rudder stock/pintle. A summary of the most important steps and conditions of this repair is shown in the **Figure 3**.

3.1.5 In case of rudder stocks with bending loads, fatigue fractures in way of the transition radius between the rudder stock and the horizontal coupling plate can not be repaired by local welding. A new rudder stock with a modified transition geometry has to be manufactured, as a rule (See **Example 1**). In exceptional cases a welding repair can be carried out based on an approved welding procedure. Measures have to be taken to avoid a coincidence of the metallurgical notch of the heat affected zone with the stress concentration in the radius' area. Additional surveys of the repair (including non-destructive fracture examination) have to be carried out in reduced intervals.

Replacing wasted material by similar ordinary weld material

- Removal of the wasted area by machining and/or grinding, non-destructive examination for fractures (magnetic particle inspection preferred)
- Build-up welding by automatic spiral welding (turning device) according to an approved welding procedure (weld process, preheating, welding consumables, etc.)
- Extension of build-up welding over the area of **large bending moments (shafts)** according to the sketch

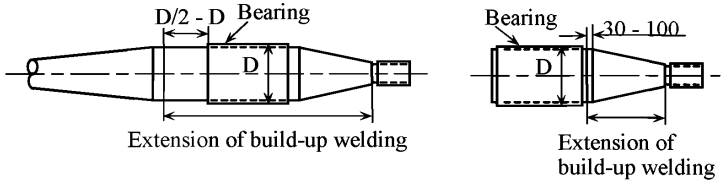

Rudder stock **Pintle**

- Sufficient number of weld layers to compensate removed material, at least one layer in excess (heat treatment of the remaining layer)
- Transition at the end of the build-up welding according to the following sketch

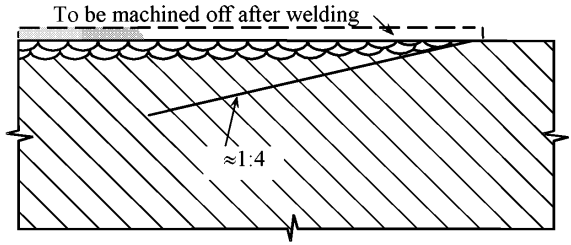

- Post weld heat treatment if required in special cases (never for stainless steel cladding on ordinary steel)
- Final machining, at least two layers of welding material have to remain on the rudder stock (See the above sketch)
- Non-destructive fracture examination

Figure 3 Rudder stock repair by welding

3.2 Plate structure

3.2.1 Fatigue fractures in welding seams (butt welds) caused by welding failures (lack of fusion) can be gouged out and rewelded with proper root penetration.

3.2.2 In case of fractures, probably caused by (resonant) vibration, vibration analysis of the rudder plating has to be performed, and design modifications have to be carried out in order to change the natural frequency of plate field.

3.2.3 Short fatigue fractures starting in the lower and/or upper corners of the pintle recess of semi-spade rudders that do not propagate into vertical or horizontal stiffening structures may be repaired by gouging out and welding. The procedure according to **Example 3** should be preferred.

In case of longer fatigue fractures starting in the lower and/or upper corners of the pintle recess of semi-spade rudders that propagate over a longer distance into the plating, thorough check of the internal structures has to be carried out. The fractured parts of the plating and of the internal structures, if necessary, have to be replaced by insert plates. A proper welding connection between the insert plate and the internal stiffening structure is very important (See **Examples 4** and **5**).

The area of the pintle recess corners has to be ground smooth after the repair. In many cases a modification of the radius, an increased thickness of plating and an enhanced steel quality may be necessary.

3.2.4 For the fractures at the connection between plating and cast pieces an adequate preheating is necessary. The preheating temperature is to be determined taking into account the following parameters:

- chemical composition (carbon equivalent C_{eq})
- thickness of the structure
- hydrogen content in the welding consumables
- heat input

3.2.5 As a guide, the preheating temperature can be obtained from **Diagram 1** using the plate thickness and carbon equivalent of the thicker structure.

3.2.6 All welding repairs are to be carried out using qualified/approved welding procedures.

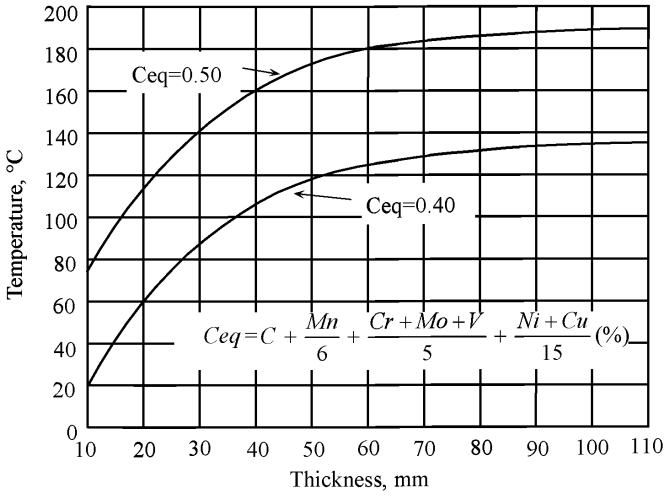

Diagram 1 Preheating temperature

3.3 Abrasion of bush and sleeve

Abrasion rate depends on the features of the ship such as frequency of maneuvering. However, if excessive clearance is found within a short period, e.g. 5 years, alignment of the rudder arrangement and the matching of the materials for sleeve and bush should be examined together with the replacement of the bush.

3.4 Assembling of rudders

After mounting of all parts of the rudder, nuts of rudder stocks with vertical cone coupling plates and nuts of pintles are to be effectively secured. In case of horizontal couplings, bolts and their nuts are to be secured either against each other or both against the coupling plates.

3.5 Propeller boss and stern tube

Repair examples for propeller boss and stern tube are shown in **Examples 7**and **8.** Regarding the welding reference is made to **3.1.4**, **3.2.4** and **3.2.5**.

BULK CARRIERS	Guidelines for Surveys, Assessment and Repair of Hull Structure	
Part 2	Fore and aft end regions	Example No.
Area 3	Stern frame, rudder arrangement and propeller shaft support	1
Detail of damage	Fractures in rudder horn along bottom shell plating	

Sketch of damage

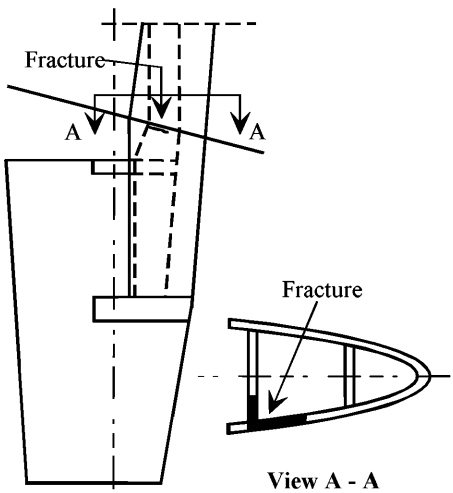

Sketch of repair

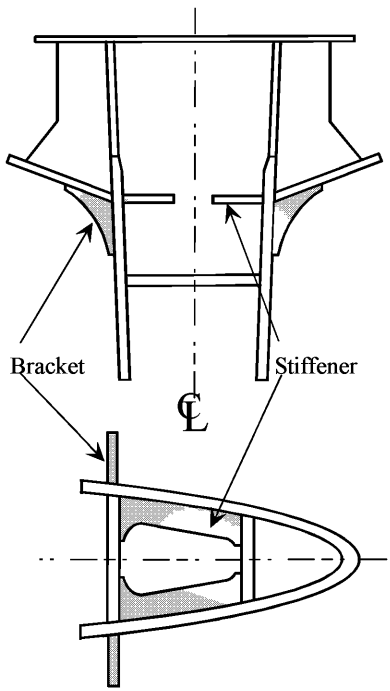

Notes on possible cause of damage

1. Insufficient strength due to poor design.

Notes on repairs

1. Fractured plating to be veed-out and rewelded.
2. Fractured plating to be cropped and renewed if considered necessary.
3. Reinforcement should be considered if considered necessary.

BULK CARRIERS	Guidelines for Surveys, Assessment and Repair of Hull Structure	
Part 2	Fore and aft end regions	Example No.
Area 3	Stern frame, rudder arrangement and propeller shaft support	2
Detail of damage	Fractures in rudder stock	

Sketch of damage

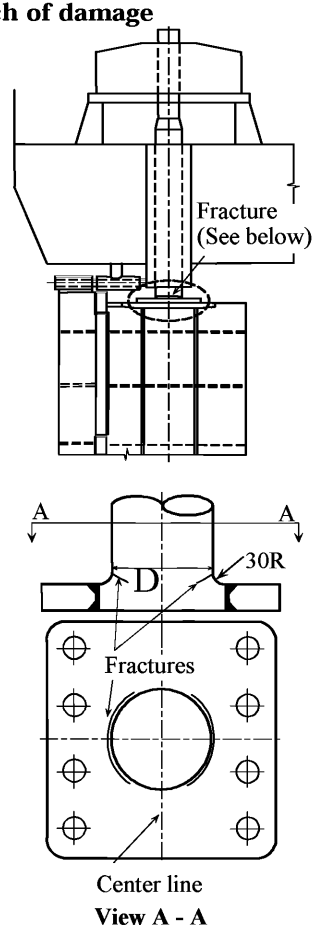

View A - A

Sketch of repair

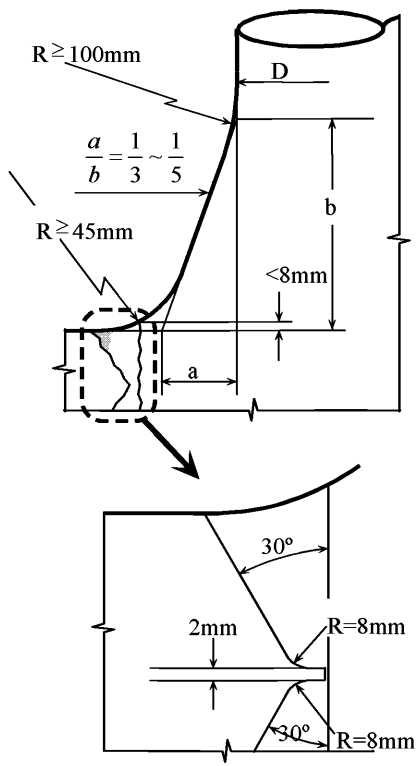

Notes on possible cause of damage

1. Inadequate design for stress concentration in rudder stock.

Notes on repairs

1. Modification of detail design of rudder stock to reduce the stress concentration.

BULK CARRIERS	Guidelines for Surveys, Assessment and Repair of Hull Structure	
Part 2	**Fore and aft end regions**	**Example No.**
Area 3	**Stern frame, rudder arrangement and propeller shaft support**	**3**
Detail of damage	Fractures in connection of palm plate to rudder blade	

Sketch of damage

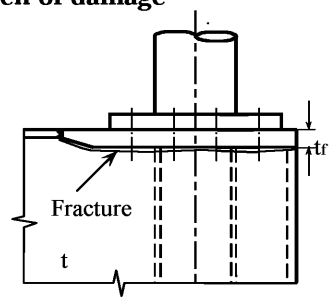

Sketch of repair

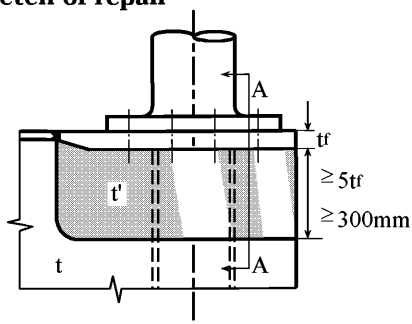

View A - A

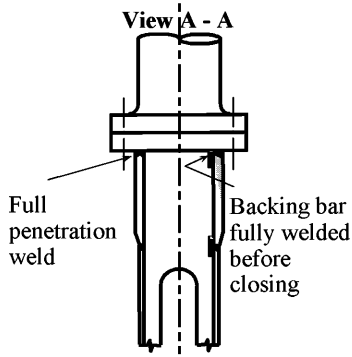

t = plate thickness, mm

t_f = actual flange thickness, mm

$t = \frac{t_f}{3} + 5$, mm, where $t_f \leq 50$mm

$t = 3\sqrt{t_f}$, mm, where $t_f \geq 50$mm

Notes on possible cause of damage

1. Inadequate connection between palm plate and rudder blade plating (insufficient plating thickness and/or insufficient fillet weld).

Notes on repairs

1. Modification of detail design of the connection by increasing the plate thickness and full penetration welding.

BULK CARRIERS	Guidelines for Surveys, Assessment and Repair of Hull Structure	
Part 2	Fore and aft end regions	Example No.
Area 3	Stern frame, rudder arrangement and propeller shaft support	4
Detail of damage	Fractures in rudder plating of semi-spade rudder (short fracture with end located forward of the vertical web)	

Sketch of damage

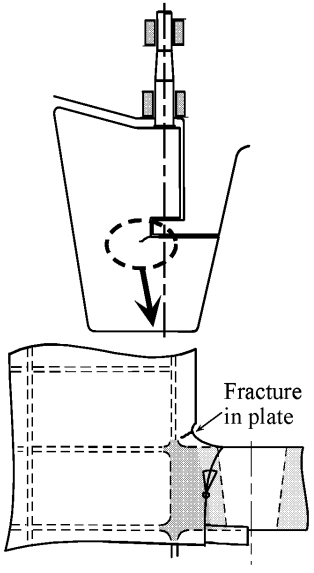

Sketch of repair

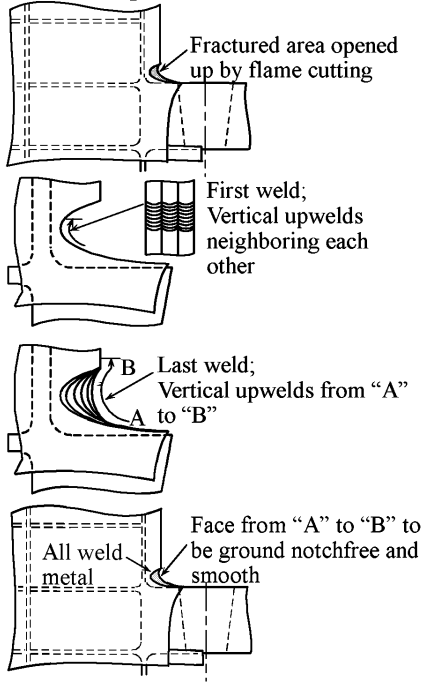

Notes on possible cause of damage

1. Stress concentration due to inadequate local design and/or fabrication notches in way of the butt weld between cast piece and plating.

Notes on repairs

1. Grooving-out and welding of the fracture is not always adequate (metallurgical notch in way of a high stressed area).
2. In the proposed repair procedure the metallurgical notches are shifted into a zone exposed to lower stresses.
3. After welding a modification of the radius according to the proposal in **Example 5** is to be carried out.
4. In case of very small crack it can be ground off by increasing the radius.

GENERAL CARGO SHIPS	Guidelines for Surveys, Assessment and Repair of Hull Structure	
Part 2	**Fore and aft end regions**	**Example No.**
Area 3	**Stern frame, rudder arrangement and propeller shaft support**	**5**
Detail of damage	Fractures in rudder plating of semi-spade rudder extending beyond the vertical web	

Sketch of damage

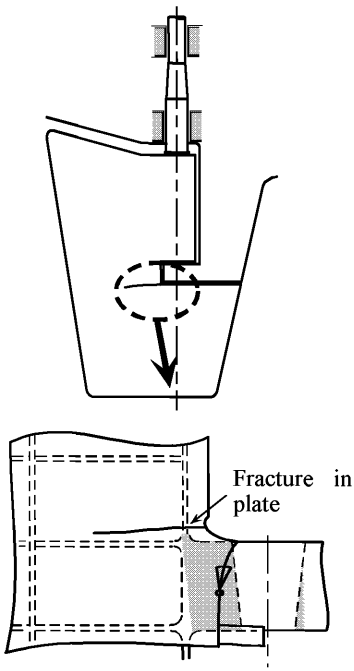

Sketch of repair

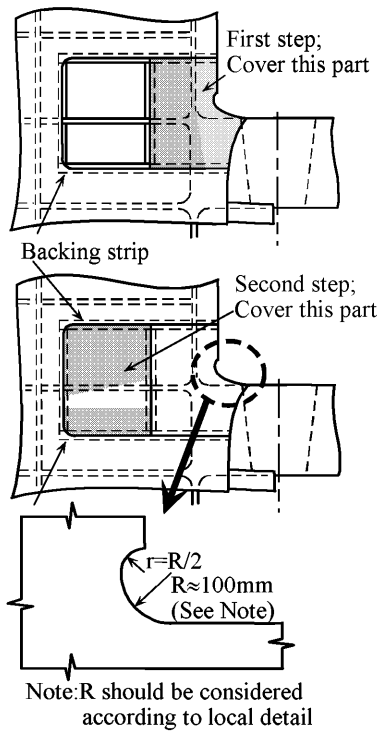

Notes on possible cause of damage

1. Stress concentration due to inadequate local design and/or fabrication notches in way of the butt weld between cast piece and plating.

Notes on repairs

1. Fractured plating is to be cut-out.
2. Internal structures are to be checked.
3. Cut-out is to be closed by an insert plating according to the sketch (welding only from one side is demonstrated).
4. Modification of the radius.
5. In case of a new cast piece, connection with the plating is to be shifted outside the high stress area.

BULK CARRIERS	Guidelines for Surveys, Assessment and Repair of Hull Structure	
Part 2	Fore and aft end regions	Example No.
Area 3	Stern frame, rudder arrangement and propeller shaft support	6
Detail of damage	Fractures in rudder plating of semi-spade rudder in way of pintle cutout	

Sketch of damage

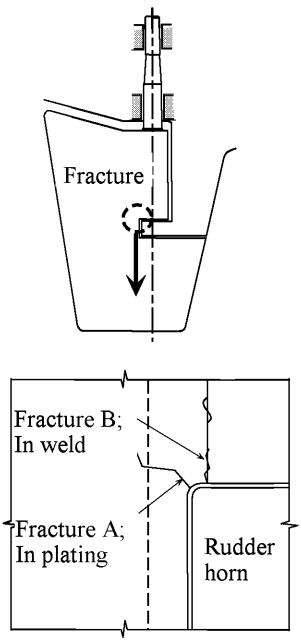

Sketch of repair

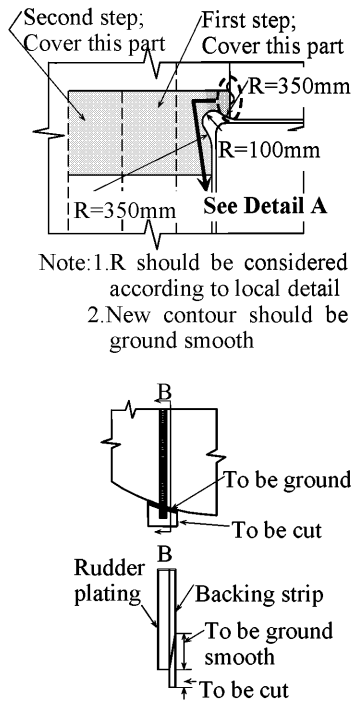

Notes on possible cause of damage

1. Inadequate design for stress concentration in way of pintle bearing (**Fracture A**).
2. Imperfection in welding seam (**Fracture B**).

Notes on repairs

1. Fractured part to be cropped off.
2. Repair by two insert plates of modified, stress releasing contour. For the vertical seam no backing strip is used 100mm off contour, welding from both sides, to be ground after welding.
3. Variant (See **Detail A**): Repair as mentioned under 2 with the use of backing strip for the compete vertical seam. After welding backing strip partly removed by grinding.

BULK CARRIERS	Guidelines for Surveys, Assessment and Repair of Hull Structure	
Part 2	Fore and aft end regions	Example No.
Area 3	Stern frame, rudder arrangement and propeller shaft support	7
Detail of damage	Fractures in side shell plating at the connection to propeller boss	

Sketch of damage

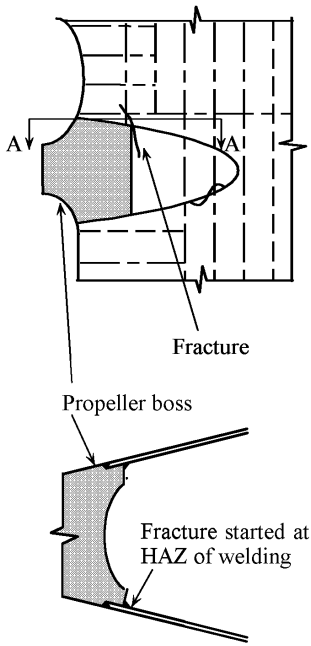

View A - A

Sketch of repair

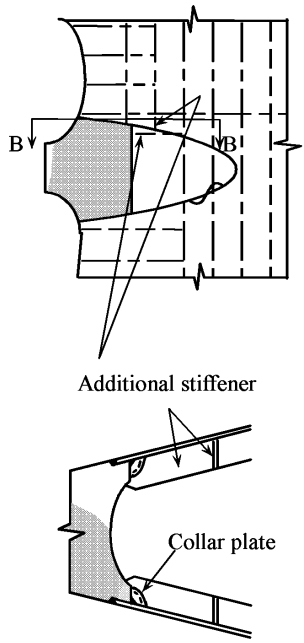

View B - B

Notes on possible cause of damage

1. Fatigue fracture due to vibration.

Notes on repairs

1. Fractured side shell plating is to be cropped and part renewed.
2. Additional stiffeners are to be provided.
3. Collar plate is to be provided.

BULK CARRIERS	Guidelines for Surveys, Assessment and Repair of Hull Structure	
Part 2	Fore and aft end regions	Example No.
Area 3	Stern frame, rudder arrangement and propeller shaft support	8
Detail of damage	Fractures in stern tube at the connection to stern frame	

Sketch of damage

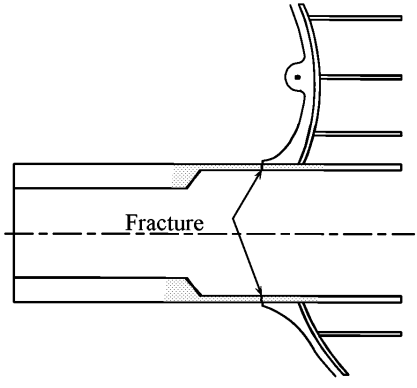

Sketch of repair

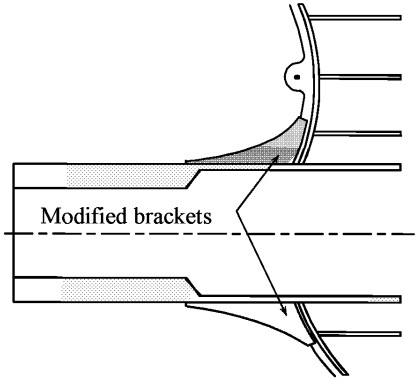

Notes on possible cause of damage

1. Fatigue fracture due to vibration.

Notes on repairs

1. Fractured tube is to be veed-out and welded from both sides.
2. Brackets are to be replaced by modified brackets with soft transition.

Part 3 Machinery and accommodation spaces

Contents

Area 1 Engine room structure
Area 2 Accommodation structure

Area 1 Engine room structure

Contents

1 General

2 What to look for - Engine room inspection
2.1 Material wastage
2.2 Fractures

3 What to look for - Tank inspection
3.1 Material wastage
3.2 Fractures

4 General comments on repair
4.1 Material wastage
4.2 Fractures

Examples of structural detail failures and repairs - Area 1	
Example No.	**Title**
1	Fractures in brackets at main engine foundation
2	Corrosion in bottom plating under sounding pipe in way of bilge storage tank
3	Corrosion in bottom plating under inlet/suction pipe in way of bilge storage tank

1 General

The engine room structure is categorized as follows:

- Boundary structure which consists of upper deck, bulkhead, inner bottom plating, funnel, etc.
- Deep tank structure
- Double bottom tank structure

The boundary structure can generally be inspected routinely and therefore any damages found can usually be easily rectified. Deep tank and double bottom structures, owing to access difficulties, generally cannot be inspected routinely. Damage of these structures is usually only found during dry docking or when a leakage is in evidence.

2 What to look for - Engine room inspection

2.1 Material wastage

2.1.1 Tank top plating, shell plating and bulkhead plating adjacent to the tank top plating may suffer severe corrosion caused by leakage or lack of maintenance of sea water lines.

2.1.2 Bilge well should be cleaned and inspected carefully for heavy pitting corrosion caused by sea water leakage at gland packing or maintenance operation of machinery.

2.1.3 Part of the funnel forming the boundary structure often suffer severe corrosion which may impair fire fighting in engine room and weathertightness.

3 What to look for - Tank inspection

3.1 Material wastage

3.1.1 The environment in bilge tanks, where mixture of oily residue and seawater is accumulated, is more corrosive when compared to other double bottom tanks. Severe corrosion may result in holes in the bottom plating, especially under sounding pipe. Pitting corrosion caused by seawater entered from air pipe is seldom found in cofferdam spaces.

3.2 Fractures

3.2.1 In general, deep tanks for fresh water or fuel oil are located in engine room. The structure in these tanks often sustains fractures due to vibration. Fracture of double bottom structure in engine room is seldom found due to its high structural rigidity.

4 General comments on repair

4.1 Material wastage

4.1.1 Where part of the structure has deteriorated to the permissible minimum thickness, then the affected area is to be cropped and renewed.

Repair work in double bottom will require careful planning in terms of accessibility and gas freeing is required for repair work in fuel oil tanks.

4.2 Fractures

4.2.1 For fatigue fractures caused by vibration, in additional to the normal repair of the fractures, consideration should be given to modification of the natural frequency of the structure to avoid resonance. This may be achieved by providing additional structural reinforcement, however, in many cases, a number of tentative tests may be required to reach the desired solution.

BILK CARRIERS	Guidelines for Surveys, Assessment and Repair of Hull Structure	
Part 3	Machinery and accommodation spaces	Example No.
Area 1	Engine room structure	1
Detail of damage	Fractures in brackets at main engine foundation	

Sketch of damage

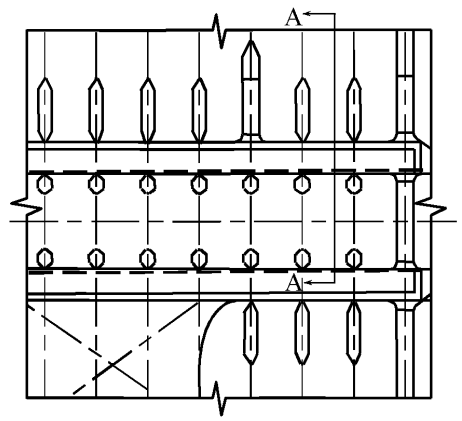

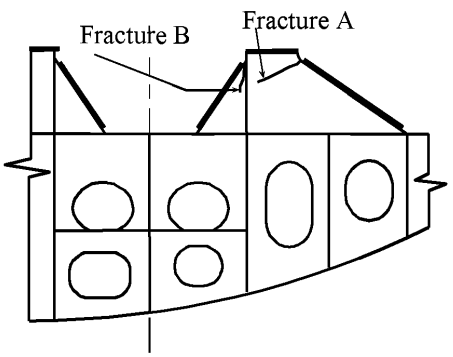

View A - A

Sketch of repair

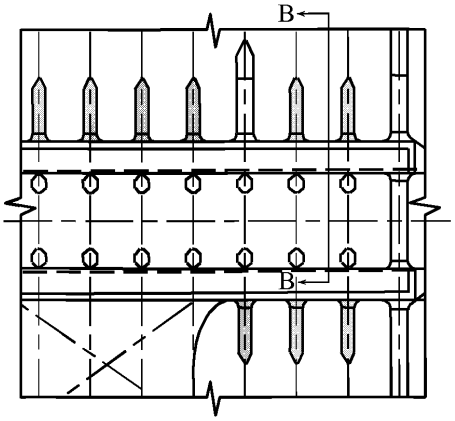

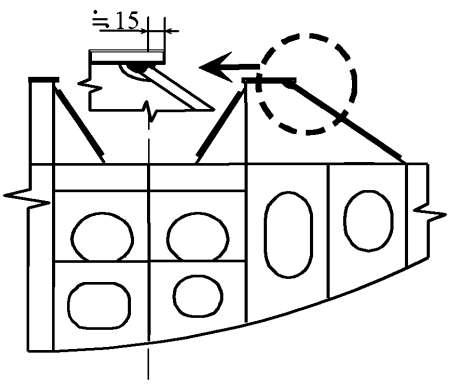

View B - B

Notes on possible cause of damage

1. Vibration of main engine.
2. Insufficient strength of brackets at main engine foundation.
3. Insufficient pre-load bolts.

Notes on repairs

1. Fractures are to be veed-out and rewelded.
2. New modified brackets at main engine foundation.
3. Or insert pieces and additional flanges to increase section modulus of the brackets.

BULK CARRIERS	Guidelines for Surveys, Assessment and Repair of Hull Structure	
Part 3	Machinery and accommodation spaces	Example No.
Area 1	Engine room structure	2
Detail of damage	Corrosion in bottom plating under sounding pipe in way of bilge storage tank in engine room	

Sketch of damage

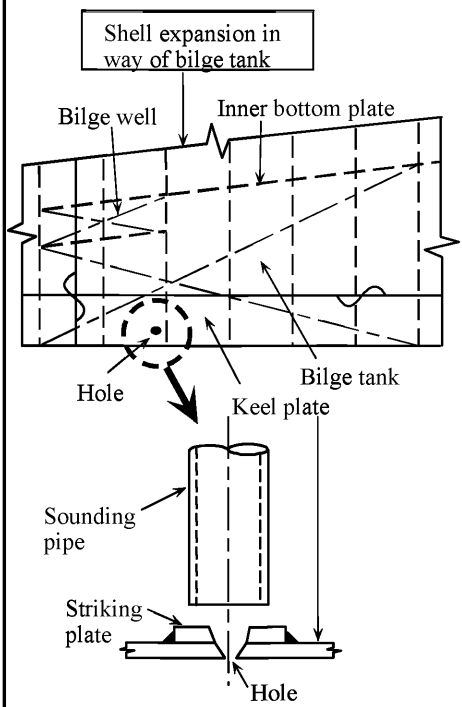

Sketch of repair

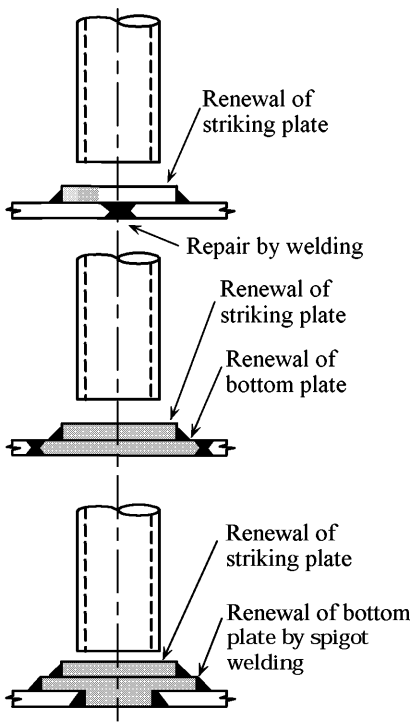

Notes on possible cause of damage

1. Heavy corrosion of bottom plating under sounding pipe.

Notes on repairs

1. Corroded striking plating should be renewed.
2. Bottom plate should be repaired depending on the condition of corrosion.
   (Note)
   Repair by spigot welding can be applied to the structure only when the stress level is considerably low. Generally this procedure cannot be applied to the repair of bottom plating of ballast tanks in cargo hold region.

BULK CARRIERS	Guidelines for Surveys, Assessment and Repair of Hull Structure	
Part 3	**Machinery and accommodation spaces**	**Example No.**
Area 1	**Engine room structure**	**3**
Detail of damage	Corrosion in bottom plating under inlet/suction/pipe in way of bilge tank in engine room	

Sketch of damage

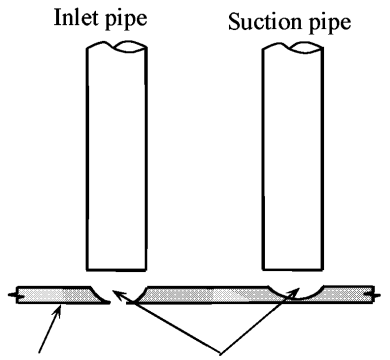

Sketch of repair

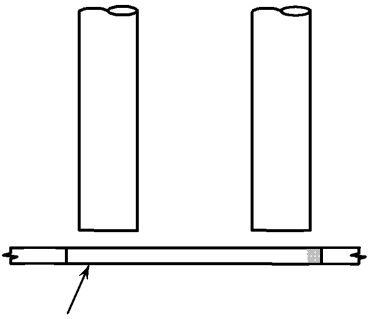

Notes on possible cause of damage

1. Heavy corrosion of bottom plating under the inlet/suction pipe.

Notes on repairs

1. Corroded bottom plating is to be cropped and part renewed. Thicker plate is preferable.
2. Replacement of pipe end by enlarged conical opening (similar to suction head in ballast tank) is preferable.

Area 2 Accommodation structure

Contents

1 General

Figures and/or Photographs - Area 1	
No.	**Title**
Photograph 1	Corroded accommodation house side structure

1 General

Corrosion is the main concern in accommodation structure and deck houses of aging ships. Owing to the lesser thickness of the structure plating, corrosion can propagate through the thickness of the plating resulting in holes in the structure.

Severe corrosion may be found in exposed deck plating and deck house side structure adjacent to the deck plating where water is liable to accumulate (See **Photograph 1**). Corrosion may also be found in accommodation bulkheads around cutout for fittings, such as doors, side scuttles, ventilators, etc., where proper maintenance of the area is relatively difficult. Deterioration of the bulkheads including fittings may impair the integrity of weathertightness.

Fatigue fractures caused by vibration may be found, in the structure itself and in various stays of the structures, mast, antenna etc. For such fractures, consideration should be given to modify the natural frequency of the structure by providing additional reinforcement during repair.



Photograph 1 Corroded accommodation house side structure

No. 96 (April 2007) **Double Hull Oil Tankers -** Guidelines for Surveys, Assessment and Repair of Hull Structures

IACS

**INTERNATIONAL ASSOCIATION
OF CLASSIFICATION SOCIETIES**



DOUBLE HULL OIL TANKERS

Guidelines for Surveys, Assessment and Repair of Hull Structures

Copyright
© IACS - the International Association of Classification Societies and the International Association of Classification Societies Limited, 2007.

All rights reserved.

Except as permitted under current English legislation no part of this work may be photocopied, stored in a retrieval system, published, performed in public, adapted, broadcast, transmitted, recorded or reproduced in any form or by means, without prior permission of the copyright owner.

Where IACS has granted written permission for any part of this publication to be quoted such quotation must include acknowledgement to IACS.

Enquiries should be addressed to the Permanent Secretary:

International Association of Classification Societies Ltd,
36 Broadway
London, SW1H 0BH
Telephone: 020 7976 0660
Fax: 020 7808 1100
Email: gost.e-ecolog.ru

Terms and Conditions

The International Association of Classification Societies (IACS), its Member Societies and IACS Ltd. and their directors, officers, members, employees and agents (on behalf of whom this notice is issued) shall be under no liability or responsibility in contract or negligence or otherwise howsoever to any person in respect of any information or advice expressly or impliedly given in this document, or in respect of any inaccuracy herein or omission herefrom or in respect of any act or omission which has caused or contributed to this document being issued with the information or advice it contains (if any).
Without derogating from the generality of the foregoing, neither the International Association of Classification Societies (IACS) nor IACS Ltd. nor its Member Societies nor their directors, officers, members, employees or agents shall be liable in contract or negligence or otherwise howsoever for any direct, indirect or consequential loss to any person caused by or arising from any information, advice, inaccuracy or omission given or contained herein or any act or omission causing or contributing to any such information, advice, inaccuracy or omission given or contained herein.

Any dispute concerning the provision of material herein is subject to the exclusive jurisdiction of the English courts and will be governed by English Law.

Note: Cover photo used with the kind permission of Novoship

Contents

1 Introduction

2 Classification survey requirements

2.1 General
2.2 Annual Surveys
2.3 Intermediate Surveys
2.4 Special Surveys
2.5 Drydocking (Bottom) Surveys
2.6 Damage and Repair Surveys

3 Technical background for surveys

3.1 General
3.2 Definitions
3.3 Structural Load Descriptions
3.4 Structural defects, damages and deterioration
3.5 Structural detail failures and repairs

4 Survey planning, preparation and execution

4.1 General
4.2 Survey Programme
4.3 Survey Planning Meeting
4.4 Conditions for survey
4.5 Access arrangement and safety
4.6 Use of Boats and Rafts
4.7 Personal equipment
4.8 Thickness measurement and fracture detection
4.9 Survey at sea or at anchorage
4.10 Documentation on board
4.11 Reporting and Evaluation of Survey

5 Structural detail failures and repairs

5.1 General
5.2 Actions to be taken by the Classification Society when Fatigue Failures have been Identified
5.3 Catalogue of structural detail failures and repairs
- 1 Bilge Hopper
- 2 Wing Ballast Tank
- 3 Bottom Ballast Tank
- 4 Web Frames in Cargo Tanks
- 5 Transverse Bulkhead in Cargo Tank
- 6 Deck Structure
- 7 Fore and Aft End Regions
- 8 Machinery and Accommodation Spaces

1 Introduction

The International Association of Classification Societies (IACS) is introducing a series of manuals with the intention of giving guidelines to assist the Surveyors of IACS Member Societies, and other interested parties involved in the survey, assessment and repair of hull structures for certain ship types.

This manual gives guidelines for a double hull oil tanker which is constructed primarily for the carriage of oil in bulk and which has the cargo tanks protected by a double hull which extends for the entire length of the cargo area, consisting of double sides and double bottom spaces for the carriage of water ballast or void spaces. **Figures 1 & 2** show the general views of typical double hull oil tankers with two longitudinal bulkheads or one centreline longitudinal bulkhead respectively.

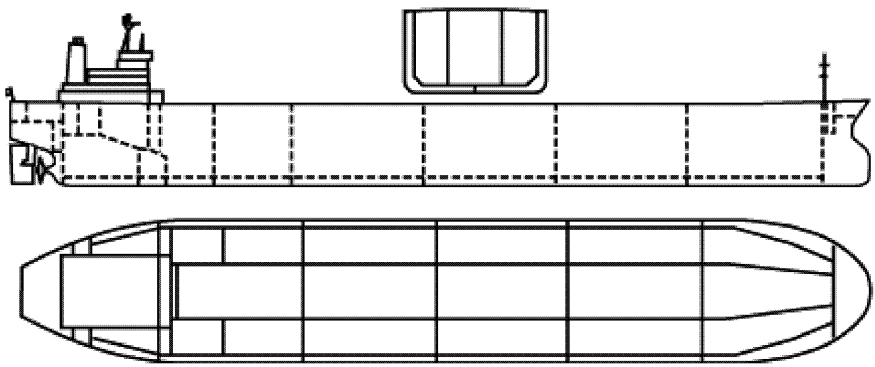

Figure 1 **General view of a typical double hull oil tanker (150,000 DWT and greater)**

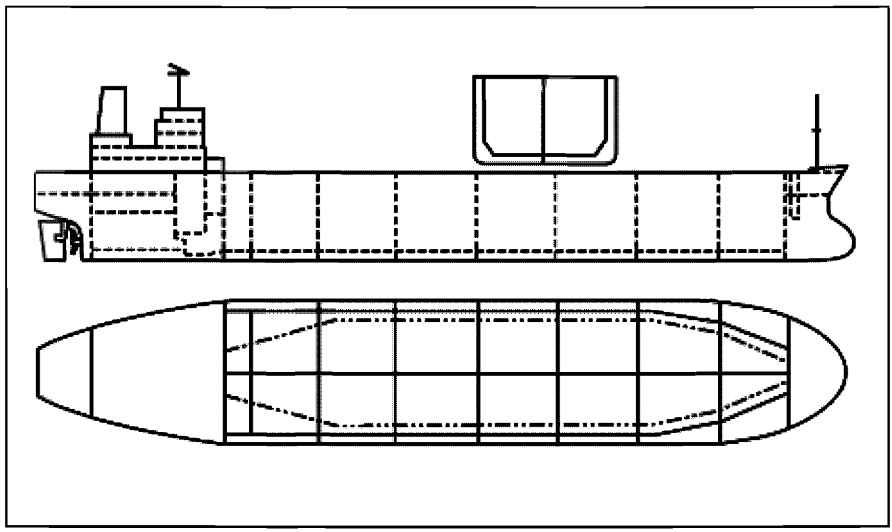

Figure 2 General view of a typical double hull oil tanker (150,000 DWT or less)

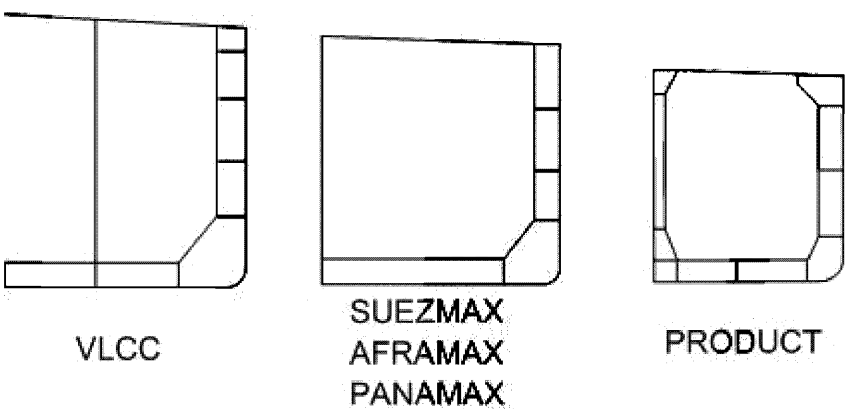

Figure 3 Categories of Bulkhead Configurations

Figures 4 to 6 show the typical nomenclature used for the midship section and transverse bulkhead.

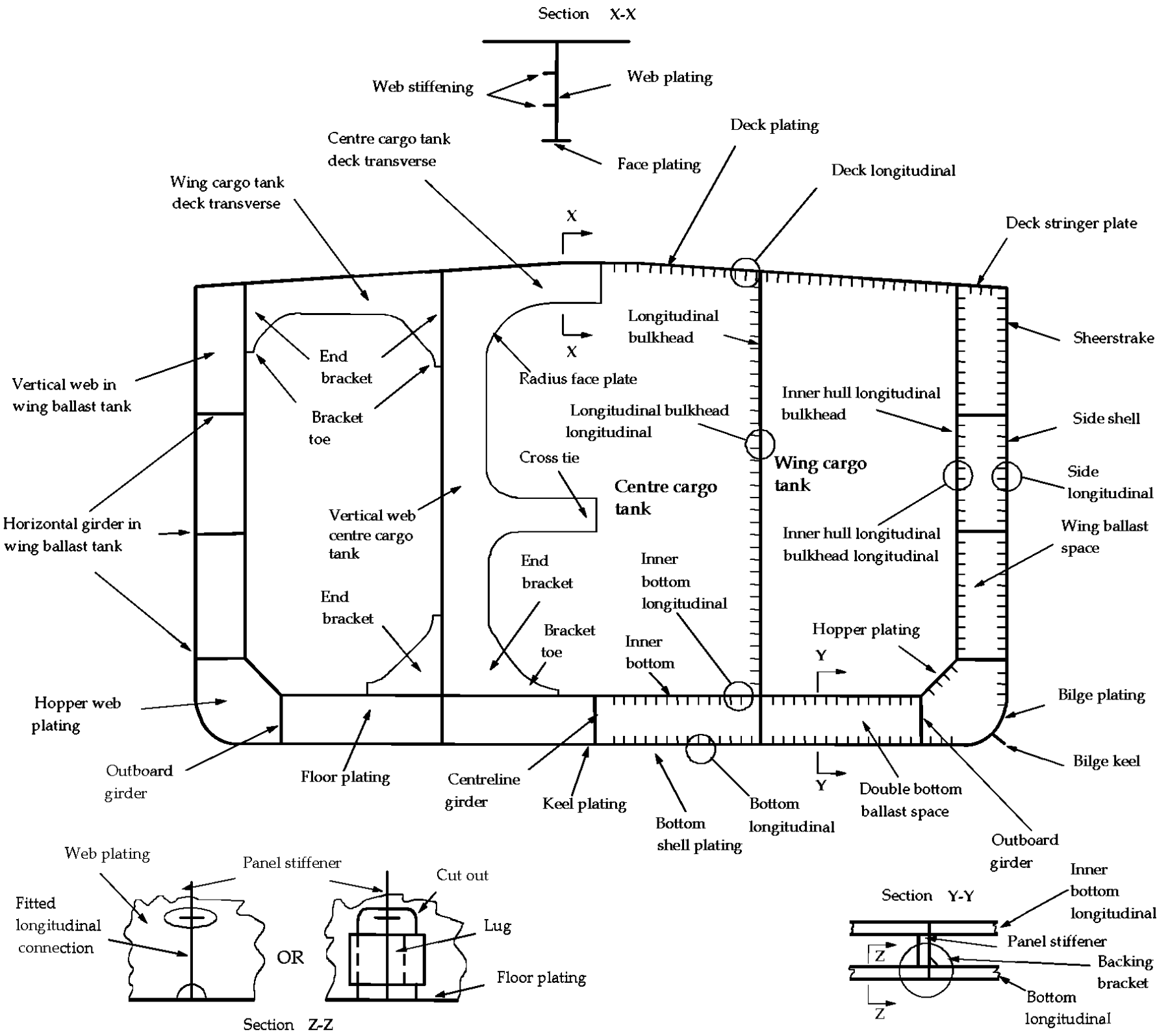

Figure 4 Typical midship section of a double hull oil tanker with two longitudinal bulkheads including nomenclature

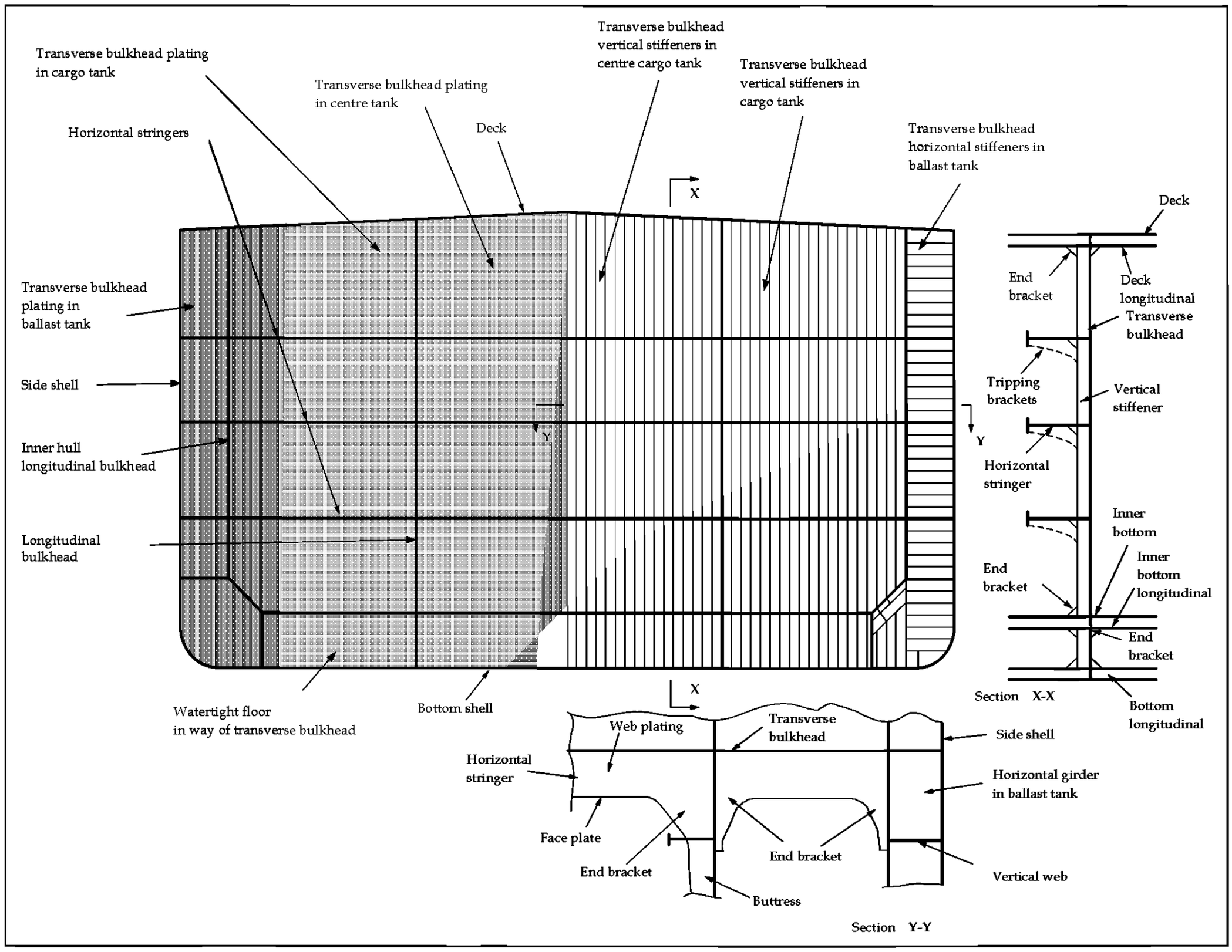

Figure 5 Double Hull Tanker – Typical Transverse Bulkhead

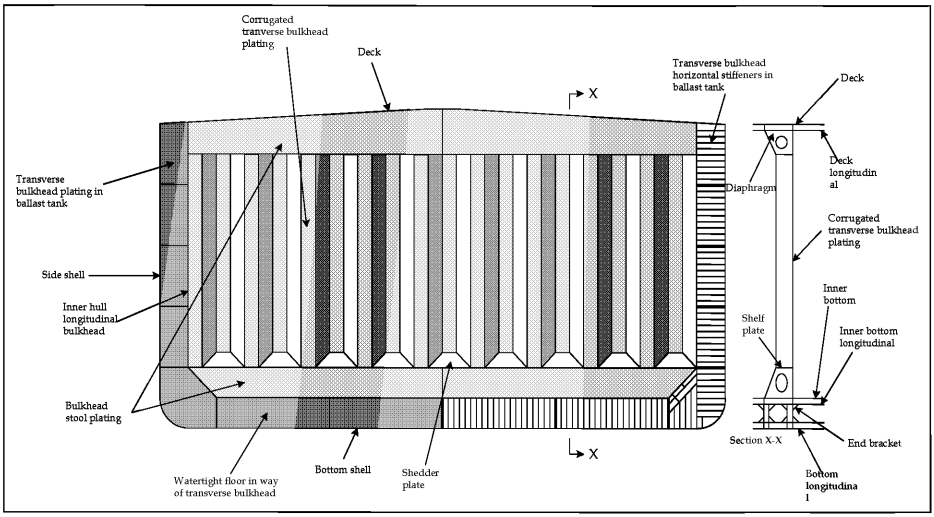

Figure 6 Corrugated Transverse Bulkhead Nomenclature

The guidelines focus on the IACS Member Societies' survey procedures but may also be useful in connection with survey/examination schemes of other regulatory bodies, owners and operators.

The manual includes a review of survey preparation guidelines, which cover the safety aspects related to the performance of the survey, the necessary access facilities, and the preparation necessary before the surveys can be carried out.

The survey guidelines encompass the different main structural areas of the hull where damages have been recorded, focusing on the main features of the structural items of each area.

An important feature of the manual is the inclusion of the section, which illustrates examples of structural deterioration and damages related to each structural area and gives what to look for, possible cause, and recommended repair methods, when considered appropriate.

This manual has been developed using the best information currently available. It is intended only as guidance in support of the sound judgment of Surveyors, and is to be used at the Surveyors' discretion. It is recognized that alternative and satisfactory methods are already applied by Surveyors. Should there be any doubt with regard to interpretation or validity in connection with particular applications, clarification should be obtained from the Classification Society concerned.

Surveyors dealing with single hull oil tankers should be encouraged to read the "Guidance Manual for Oil Tankers" by Tanker Structure Co-operative Forum.

IACS Common Structural Rules for Tankers implemented from April 2006 have been

developed in response to a consistent and persistent call from industry for an increased standard of structural safety. This has been achieved through enhancing the design basis and applying engineering first principles. The development of the CSR for Tankers included review of existing Rules, new development using a first principle approach, application of the net thickness philosophy, an enhanced design environment and a longer life i.e. 25 years North Atlantic. These Rules are applicable to double hull oil tankers exceeding a length of 150 metres.

Note: Throughout this document reference is made to various IACS Unified Requirements (UR), Procedural Requirements (PR) and Recommendations. All URs and PRs and key recommendations are available from the IACS website (gost.e-ecolog.ru).

2 Classification Survey Requirements

2.1 General

2.1.1 The programme of periodical surveys is of prime importance as a means for assessment of the structural condition of the hull, in particular, the structure of cargo and ballast tanks. The programme consists of Special (or Renewal) Surveys carried out at five-year interval with Annual and Intermediate Surveys carried out in between Special Surveys.

2.1.2 Since 1991, it has been a requirement for new oil tankers to apply a protective coating to the structure in water ballast tanks, which form part of the hull boundary.

2.1.3 From 1 July 2001, oil tankers of 20,000 DWT and above, to which the Enhanced Survey Programme (ESP) requirements apply, starting with the 3rd Special Survey, all Special and Intermediate hull classification surveys are to be carried out by at least two exclusive Surveyors. Further, one exclusive Surveyor is to be on board while thickness measurements are taken to the extent necessary to control the measurement process. From 1 July 2005, thickness measurements of structures in areas where close-up surveys are required are to be carried out simultaneously with close-up surveys. Refer to IACS PR 19 and PR 20.

2.1.4 The detailed survey requirements complying with ESP are specified in the Rules and Regulations of each IACS Member Society.

2.1.5 ESP is based on two principal criteria: the condition of the coating and the extent of structural corrosion. Of primary importance is when a coating has been found to be in a "less than good" condition ("good" is with only minor spot rusting) or when a structure has been found to be *substantially* corroded (i.e. a wastage between 75 % and 100 % of the allowable diminution for the structural member in question). Note, for vessels built under the IACS Common Structural Rules, substantial corrosion is an extent of corrosion such that the assessment of the corrosion pattern indicates a gauged (or measured) thickness between t_{net} + 0.5mm and t_{net}.

Reference is also made to SOLAS 74 as amended regulation Part A-1/3.2 regarding corrosion protection system for seawater ballast tanks at time of construction.

2.2 Annual Surveys

2.2.1 The purpose of an Annual Survey is to confirm that the general condition of the hull is maintained at a satisfactory level.

2.2.2 Generally as the ship ages, ballast tanks are required to be subjected to more extensive overall and close-up surveys at Annual Surveys.

2.2.3 In addition, a Ballast Tank is to be examined at annual intervals where:

a. a hard protective coating has not been applied from the time of construction, or
b. a soft coating has been applied, or
c. substantial corrosion is found within the tank at a previous survey, or
d. the hard protective coating is found to be in less than GOOD condition and the hard protective coating is not repaired to the satisfaction of the Surveyor at a previous survey.

2.3 Intermediate Surveys

2.3.1 The Intermediate Survey may be held at or between the second or third Annual Survey in each five year Special Survey cycle. Those items, which are additional to the requirements of the Annual Surveys, may be surveyed either at or between the 2nd and 3rd Annual Survey. The intermediate survey contains requirements for extended overall and close-up surveys including thickness measurements of cargo and ballast tanks.

2.3.2 Areas in ballast tanks and cargo tanks found suspect at the previous surveys are subject to overall and close-up surveys, the extent of which becomes progressively more extensive commensurate with the age of the vessel.

2.3.3 For oil tankers exceeding 10 years of age, the requirements of the Intermediate Survey are to be of the same extent as the previous Special Survey. However, pressure testing of cargo and ballast tanks and the requirements for longitudinal strength evaluation of Hull Girder are not required unless deemed necessary by the attending Surveyor.

2.4 Special Surveys

2.4.1 The Special (or Renewal) Surveys of the hull structure are carried out at five-year intervals for the purpose of establishing the condition of the structure to confirm that the structural integrity is satisfactory in accordance with the Classification Requirements, and will remain fit for its intended purpose for another five-year period, subject to proper maintenance and operation of the ship and to periodical surveys carried out at the due dates.

2.4.2 The Special Survey concentrates on close-up surveys in association with thickness measurements and is aimed at detecting fractures, buckling, corrosion and other types of structural deterioration. See Figure 7.

2.4.3 Thickness measurements are to be carried out upon agreement with the Classification Society concerned in conjunction with the Special Survey.

The Special Survey may be commenced at the 4th Annual Survey and be progressed with a view to completion by the 5th anniversary date.

2.4.4 Deteriorated protective coating in *less than good* condition in salt water ballast spaces and structural areas showing substantial corrosion and/or considered by the

Surveyor to be prone to rapid wastage will be recorded for particular attention during the following survey cycle, if not repaired at the special survey.

2.5 Drydocking (Bottom) Surveys

2.5.1 There is to be a minimum of two examinations of the outside of the ship's bottom and related items during each five-year special survey period. One such examination is to be carried out in conjunction with the special survey. In all cases the interval between any two such examinations is not to exceed 36 months. An extension of examination of the ship's bottom of 3 months beyond the due date can be granted in exceptional circumstances. Refer to IACS Unified Requirement Z3.

2.5.2 For oil tankers of 15 years of age and over, survey of the outside of the ship's bottom is to be carried out with the ship in dry dock. For oil tankers less than 15 years of age, alternative surveys of the ship's bottom not conducted in conjunction with the Special Survey may be carried out with the ship afloat. Survey of the ship afloat is only to be carried out when; the conditions are satisfactorily and the proper equipment and suitably qualified staff are available.

2.6 Damage and repair surveys

2.6.1 Damage surveys are occasional surveys, which are, in general, outside the programme of periodical hull surveys and are requested as a result of hull damage or other defects. It is the responsibility of the owner or owner's representative to inform the Classification Society concerned when such damage or defect could impair the structural capability or watertight integrity of the hull. The damages should be inspected and assessed by the Society's Surveyors and the relevant repairs, if needed, are to be performed. In certain cases, depending on the extent, type and location of the damage, permanent repairs may be deferred to coincide with the planned periodical survey.

Any damage in association with wastage over the allowable limits (including buckling, grooving, detachment or fracture), or extensive areas of wastage over the allowable limits, which affects or, in the opinion of the Surveyor, will affect the vessel's structural watertight or weathertight integrity, is to be promptly and thoroughly repaired. Areas to be considered to are to include:

- bottom structure and bottom plating;
- side structure and side plating;
- deck structure and deck plating;
- watertight or oiltight bulkheads.

2.6.2 In cases of repairs intended to be carried out by riding crew during voyage, the complete procedure of the repair, including all necessary surveys, is to be submitted to and agreed upon by the Classification Society reasonably in advance.

2.6.3 IACS Unified Requirement Z13 "Voyage Repairs and Maintenance" provides useful guidance for repairs to be carried out by a riding crew during a voyage.

2.6.4 For locations of survey where adequate repair facilities are not available, consideration may be given to allow the vessel to proceed directly to a repair facility. This may require discharging the cargo and/or temporary repairs for the intended voyage. A suitable condition of class will be imposed when temporary measures are accepted.

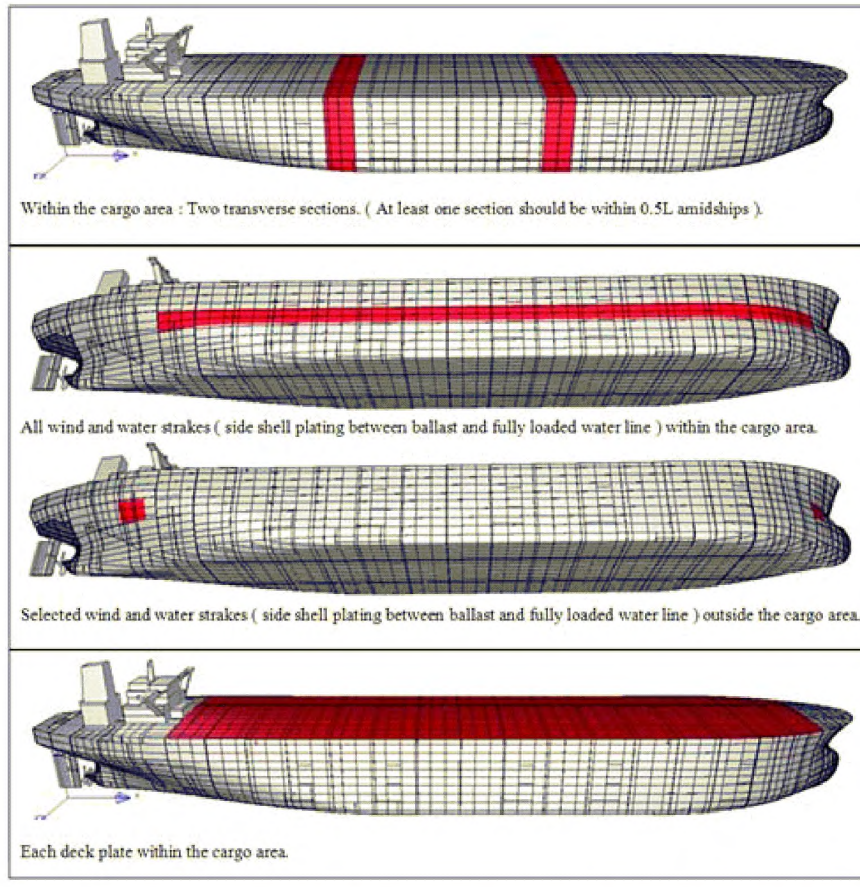

Figure 7 Example of Transverse Sections of Shell Plating and Main Deck Thickness Measurement Requirements for an oil tanker 15 years of age.

3 Technical Background for Surveys

3.1 General

3.1.1 The purpose of carrying out a structural survey of any tank is to determine the extent of corrosion wastage and structural defects present in the tank. To help achieve this and to identify key locations in the tank that might warrant special attention, the Surveyor should be familiar with the service record of the tank and any historical problems of the particular vessel or other vessels of a similar class.

An experienced Surveyor will be aware of typical structural defects likely to be encountered and some knowledge of the contributing factors to corrosion (including the effectiveness of corrosion control systems) will assist him in assessing the corrosion patterns he finds.

3.2 Definitions

3.2.1 For clarity of definition and reporting of survey data, it is recommended that standard nomenclature for structural elements be adopted. A typical midship section is illustrated in **Figures 4 to 6**. These figures show the generally accepted nomenclature.

The terms used in these guidelines are defined as follows:

(a) A **Ballast Tank** is a tank, which is used solely for the carriage of salt water ballast.

(b) A **Combined Cargo/Ballast Tank** is a tank, which is used for the carriage of cargo, or ballast water as a routine part of the vessel's operation and will be treated as a Ballast Tank. Cargo tanks in which water ballast might be carried only in exceptional cases per MARPOL I/13(3) are to be treated as cargo tanks.

(c) An **Overall Survey** is a survey intended to report on the overall condition of the hull structure and determine the extent of additional Close-up Surveys.

(d) A **Close-up Survey** is a survey where the details of structural components are within the close visual inspection range of the Surveyor, i.e. normally within reach of hand.

(e) A **Transverse Section** includes all longitudinal members such as plating, longitudinals and girders at the deck, sides, bottom, inner bottom and longitudinal bulkheads.

(f) **Representative Tanks** are those, which are expected to reflect the condition of other tanks of similar type and service and with similar corrosion prevention systems. When selecting Representative Tanks account is to be taken of the service and repair history onboard and identifiable Critical Structural Areas and/or Suspect Areas.

Note: Critical Structural Areas are locations, which have been identified from calculations to require monitoring or from the service history of the subject ship or from similar or sister ships (if available) to be sensitive to cracking, buckling or corrosion, which

would impair the structural integrity of the ship. For additional details refer to Annex I of IACS Unified Requirement Z10.4.

(g) **Suspect Areas** are locations showing Substantial Corrosion and/or are considered by the Surveyor to be prone to rapid wastage.

(h) **Substantial Corrosion** is an extent of corrosion such that assessment of corrosion pattern indicates a wastage in excess of 75% of allowable margins, but within acceptable limits.

For vessels built under the IACS Common Structural Rules, substantial corrosion is an extent of corrosion such that the assessment of the corrosion pattern indicates a gauged (or measured) thickness between t_{net} + 0.5mm and t_{net}.

(i) A **Corrosion Prevention System** is normally considered a full hard coating. Hard Protective Coating is usually to be epoxy coating or equivalent. Other coating systems may be considered acceptable as alternatives provided that they are applied and maintained in compliance with the manufacturer's specification.

(j) Coating condition is defined as follows:

- **GOOD** condition with only minor spot rusting,
- **FAIR** condition with local breakdown at edges of stiffeners and weld connections and/or light rusting over 20% or more of areas under consideration, but less than as defined for POOR condition,
- **POOR** condition with general breakdown of coating over 20% or more, or hard scale at 10% or more, of areas under consideration.

Reference is made to IACS Recommendation No.87 "Guidelines for Coating Maintenance & Repairs for Ballast Tanks and Combined Cargo / Ballast Tanks on Oil Tankers" which contains clarification of the above.

(k) **Cargo Area** is that part of the ship which contains cargo tanks, slop tanks and cargo/ballast pump-rooms, cofferdams, ballast tanks and void spaces adjacent to cargo tanks and also deck areas throughout the entire length and breadth of the part of the ship over the above mentioned spaces.

(l) **Special consideration** or **specially considered** (in connection with close-up surveys and thickness measurements) means sufficient close-up survey and thickness measurements are to be taken to confirm the actual average condition of the structure under the coating.

(m) A **Prompt and Thorough Repair** is a permanent repair completed at the time of survey to the satisfaction of the Surveyor, therein removing the need for the imposition of any associated condition of classification, or recommendation.

3.3 Structural Load Descriptions

(a) Structural Aspects

A tanker must maintain its structural integrity and water tight envelope when exposed to internal static and dynamic liquid loads, including sloshing loads, to external hydrostatic and dynamic sea loads, and to longitudinal hull girder bending. Longitudinally stiffened

plate is typically the primary structure of a tanker. This stiffened plate is supported by web frames, girders and bulkheads. The hydrostatic and hydrodynamic pressures flow from the plate through the stiffeners into the web frames, girders and bulkheads where they balance other loads or contribute to accelerations.

Most loads are cyclic with many different frequencies. The cyclic loads affecting fatigue are described in section 3.4.3. The following describe the loads that the major structural elements must resist.

(b) Tank Bottom Structures

The bottom structure must resist the axial loads from hull girder bending plus local bending from cargo, ballast and seawater pressure and structural loads from adjacent tanks. The hull girder bending loads are generally the highest midships and combine with the hydrostatic loads to generate the maximum stresses. The hydrostatic loads on the bottom are the highest in the vessel but are generally varying less than the side shell frame external wave loads.

(c) Side Shell, Longitudinal and Transverse Bulkheads

The side shell, longitudinal and transverse bulkheads maintain each tank's integrity and resist hydrostatic pressures as well as internal sloshing and external wave loads. The side shell and longitudinal bulkheads are also the webs of the hull girder and transmit the shear loads from tank to tank and along the length of the vessel. These members also contribute somewhat to resisting the longitudinal bending near the deck and bottom. The transverse bulkheads transmit the transverse shear loads and maintains the hull girder's form along with the transverse web frame rings.

The girders, stringers and vertical web frames that support the bulkheads resist bending and shear loads as they transmit the local pressure loads into the hull girder.

The hydrostatic loading increases linearly with depth and is often balanced with a liquid on the opposite side of the structure. The wave loading on the ship is cyclic and is the primary cause of the vessel fatigue, see section 3.4.3.

(d) Deckhead Structures

The main load on the deck is axial due to hull girder bending and transverse due to tank loading and waves. The axial stresses in the deck are the highest in the vessel as the upper deck is farthest from the neutral axis. While local loads are generally small on a tanker deck, equipment foundation loads, green water on deck and sloshing loads must be considered.

3.4 Structural defects, damages and deterioration

3.4.1 General

In the context of this manual, structural damages and deterioration imply deficiencies caused by:

- excessive corrosion
- design faults
- material defects or bad workmanship
- weld defects
- buckling
- fatigue
- navigation in extreme weather conditions
- loading and unloading operations, water ballast exchange at sea
- wear and tear
- contact (with quayside, ice, lightering service, touching underwater objects, etc.) but not as a direct consequence of accidents such as collisions, groundings and fire/explosions.

Deficiencies are normally recognized as:

- material wastage
- fractures
- deformations

The various types of deficiencies and where they may occur are discussed in more detail in subsequent sections.

3.4.2 Structural Defects

Structural defects include weld defects, buckling and fractures, see also **3.4.3** Fatigue. Fractures initiating at latent defects in welding more commonly appear at the beginning or end of a run, or rounding corners at the end of a stiffener or at an intersection. Special attention should be paid to welding at toes of brackets and cut-outs or intersections of welds. Fractures may also be initiated by undercutting in way of stress concentrations. Corrosion of welds may be rapid because of the influence of the deposited metal or the heat affected zone, and this may lead to stress concentrations.

Permanent buckling may arise as a result of overloading, overall reduction in thickness due to corrosion, or damage. Elastic buckling will not be directly obvious but may be detected by coating damage, stress lines or shedding of scale.

Some fractures may not be readily visible due to lack of cleanliness, difficulty of access, poor lighting or compression of the fracture surfaces at the time of survey. It is therefore important to identify and closely inspect potential problem areas. Fractures will normally initiate at notches, stress concentrations or weld defects. Where these initiation points are not apparent on one side, the structure on the other side of the plating should be examined.

The following areas where structural defects might occur should have special attention at the survey:

(a) Cargo Tanks
   i. Main deck deckhead: corrosion and fractures.
   ii. Buckling in web plate of the underdeck web frame and fractures at end of bracket toes.
   iii. Transverse bulkhead horizontal stringers: fractures in way of cut-outs and at end bracket toe connections to inner hull and longitudinal bulkhead.
   iv. Longitudinal bulkhead transverse web frames: fractures at end bracket toe connection to inner bottom.
   v. Necking effect of longitudinal web plating at longitudinal bulkhead plating.
   vi. For plane transverse bulkheads, transverse bulkhead vertical stiffeners connected to inner bottom: for vertically corrugated bulkheads, corrugation connection to lower shelf plate and bulkhead plating connection to inner bottom: fractures caused by misalignment and excessive fit-up gap.
   vii. Transverse bulkheads at the forward and after boundaries of the cargo space: fractures in way of inner bottom.
   viii. Pitting and grooving of inner bottom plating.

(b) Double Hull Ballast Spaces
   i. Main deck deckhead: corrosion and fractures.
   ii. Inner hull plate and stiffener: coating breakdown.
   iii. Buckling of the web plate in the upper and lower part of the web frame.
   iv. Fractures at the side shell longitudinal connection to web frames due to fatigue.
   v. Corrosion and fractures at knuckle joints in inner hull at forward and after parts of ship.
   vi. Corrosion and fractures at the juncture where the sloped inner hull is connected to the inner bottom.
   vii. Fractures at side and inner hull longitudinal connections to transverse bulkheads due to fatigue and/or high relative deflections.
   viii. Inner bottom deckhead corrosion at inner bottom.
   ix. Bottom corrosion wastage.
   x. Cracks at inner bottom longitudinal connection to double bottom floor web plating.
   xi. Fractures at inner bottom and bottom longitudinal; connection to transverse watertight floor due to high relative defections.

3.4.3 Fatigue

Fatigue is the most common cause of cracking in the structure of large tankers. The cracks generally develop at structural intersections of structural members or discontinuities where detailed design has led to a stress raiser such as a hot spot. Other reasons maybe related to material or welding defects, or some other type of notch.

Fatigue failures are caused by repeated cyclical stresses that individually would not be sufficient to cause failure but can initiate cracks, in particular in way of built in defects, which can grow to sufficient size to become significant structural failures. Typical cyclic loading mechanisms are:

- hull girder wave bending moments and shear forces;
- local pressure variation;
- cargo or ballast internal pressure variation.

If the crack remains undetected and unrepaired it can grow to a size where it can cause sudden fracture. However, it is unusual for a fatigue crack to lead directly to a catastrophic failure.

Fatigue failures can generally be considered to have three stages:

- Initiation
- Stable crack growth
- Unstable crack growth

In order to develop structural designs that will minimise the amount of fatigue cracking, and ensure that fatigue cracking does not cause a structural failure, it will be necessary to carry out greater investigation of fatigue strength than has traditionally been the case for large tankers.

Fatigue strength can be calculated using 2 methods:

- Compare calculated numbers of cyclic stress ranges with established fatigue criteria (S-N data).
- Calculate crack growth rates based on above stress range data and material properties.

(a) Typical Locations for High Sensitivity to Fatigue Failure

The following areas are considered to be prone to fatigue failure on double hull oil tankers:

- Side shell area below the load and ballast waterlines. These areas are subjected to the highest cycle loading through the ship's life due to the passage of waves along the side of the ship.
- Deck plating at connection to primary supporting members.
- Connection between transverse bulkheads to the upper and lower bulkhead stools.
- Connection between lower hopper sloping plating and inner bottom plating.

Where dynamic stresses are prevalent, the use of symmetrical profiles, such as "T" - section, will substantially reduce fatigue damage caused by biaxial bending on asymmetrical profiles.

The fatigue fractures in side longitudinal connections of higher tensile construction in

certain single hull VLCCs has now been well documented, and design details in way of these connections to increase fatigue life are now incorporated by many Shipyards as standard in double hull designs.

These details include the incorporation of soft-toed panel stiffeners with either soft-toed backing brackets or reversed radii at the heel of the panel stiffener.

It is therefore important that due consideration be given to this detail and other areas of potential problems at the design stage to reduce the risk of fatigue cracking during service.

(b) The Effect of Higher Tensile Steel

The higher yield strength of HTS has enabled a structure to be designed with higher stresses resulting in lighter scantlings. This does, however, also lead to an increase in the dynamic stress range. The fatigue damage is proportional to the stress range cubed, and HTS materials in welded connections have similar fatigue properties as mild steel. Therefore, it follows that the risk of high-cycle fatigue damage may increase for welded HTS connections in tankers when the increased strength capabilities are utilised.

The use of lighter scantlings often leads to higher deflections, which are particularly important at the side shell connections. In some HTS designs it is possible, that the deflections of the side shell web frames may be larger than in Mild Steel designs, due to the ability of the HTS material to accept higher stress levels in combination with structural arrangement such as wider web frame spacing and lack of cross ties. Such deflections add to the stress levels in the longitudinals at the intersections between the longitudinals and the transverse bulkheads, the additions being proportional to the deflections.

The notch toughness properties of all HTS used in the ship are verified by testing whereas mild steel A-grade is not. The notch toughness is an important parameter in the evaluation of resistance to brittle fracture. However, this would not have significant effect on the risk of crack initiation or the stable crack growth, but would have significant effect on the final unstable crack propagation.

The above factors have to be considered when designs of HTS are made, and today it is normal practice to improve the detail design in order to reduce the stress concentrations in areas where calculations show that high dynamic stress levels are expected. The shipside is particularly prone to high-cycle fatigue damage.

The overall effect when the higher strength of HTS is utilized for such locations, can be to significantly increase the risk of fatigue damage. By improving the detail design, it will usually be possible to obtain a fatigue life comparable to that for ordinary mild steel designs.

For locations where cracking is due to low-cycle fatigue, the use of HTS in local details may be very beneficial for the fatigue strength. This is the case for areas, which are subject to large static stress variations due to loading and unloading, such as the connection between the hopper plating and the double bottom plating. For such locations, local details with HTS will experience less plastic strains, and the low cycle fatigue strength therefore be increased compared with mild steel details. Nevertheless it should be checked whether wave induced loads are marginal or not.

3.4.4 Typical Corrosion Patterns

In addition to being familiar with typical structural defects likely to be encountered during a survey, it is necessary to be aware of the various forms and possible locations of corrosion that may occur to the structural members on decks and in tanks.

The main types of corrosion patterns, which may be identified, include the following:

(a) General Corrosion

General corrosion appears as non-protective, friable rust, which can occur uniformly on tank internal surfaces that are uncoated. The rust scale continually breaks off, exposing fresh metal to corrosive attack. Thickness loss cannot usually be judged visually until excessive loss has occurred. Failure to remove mill scale during construction of the ship can accelerate corrosion experienced in service. Severe general corrosion in all types of ships, usually characterized by heavy scale accumulation, can lead to extensive steel renewals.

(b) Grooving Corrosion

Grooving corrosion is often found in or beside welds, especially in the heat affected zone. This corrosion is sometimes referred to as 'inline pitting attack' and can also occur on vertical members and flush sides of bulkheads in way of flexing. The corrosion is caused by the galvanic current generated from the difference of the metallographic structure between the heat affected zone and base metal. Coating of the welds is generally less effective compared to other areas due to roughness of the surface, which exacerbates the corrosion. Grooving corrosion may lead to stress concentrations and further accelerate the corrosion process. Grooving corrosion may be found in the base material where coating has been scratched or the metal itself has been mechanically damaged. An example of grooving corrosion is shown in Figure 8.

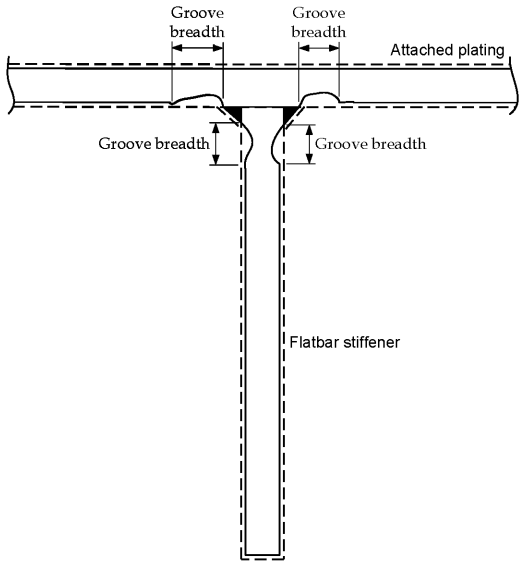

Figure 8 Grooving Corrosion

(c) Pitting Corrosion

Pitting corrosion is a localized corrosion often found in the inner bottom plating or on horizontal surfaces in cargo oil tanks and in the bottom plating of ballast tanks. Pitting corrosion is normally initiated due to local breakdown of coating. For coated surfaces the attack produces deep and relatively small diameter pits that can lead to hull penetration in isolated random places in the tank.

Pitting of uncoated tanks, as it progresses, forms shallow but very wide scabby patches (e.g. 300 mm diameter); the appearance resembles a condition of general corrosion. Severe pitting of uncoated tanks can affect the strength of the structure and lead to extensive steel renewals.

Once pitting corrosion starts, it is exacerbated by the galvanic current between the pit and other metal.

Erosion which is caused by the wearing effect of flowing liquid and abrasion which is caused by mechanical actions may also be responsible for material wastage.

(d) Edge Corrosion

Edge corrosion is defined as local corrosion at the free edges of plates, stiffeners, primary support members and around openings. An example of edge corrosion is shown in Figure 9.

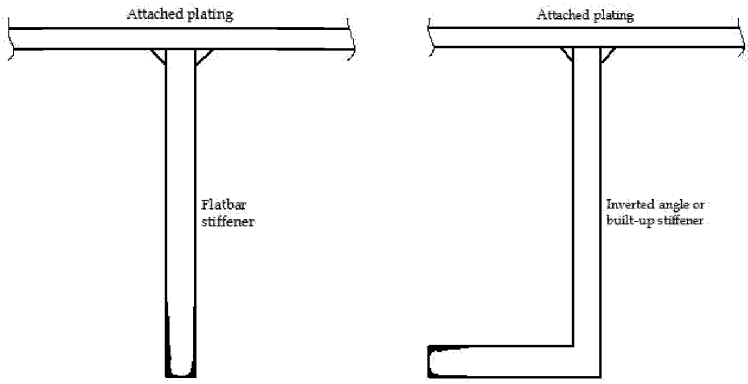

Figure 9 Edge Corrosion

3.4.5 Factors Influencing Corrosion

When corrosion problems occur it is important to have some understanding of the possible contributing factors to the corrosion so that remedial action taken will minimize the possibility of future repetition. The significance of each of these factors will vary depending upon the tank service. Similarly, for ballast tanks the effectiveness of the protection system and high humidity could be major factors. For cargo only tanks the method and frequency of tank washing and the sulphur content of the cargo could be factors of particular significance.

The following is a list of possible factors, which might be relevant in evaluating corrosion patterns being experienced:

(a) Frequency of Tank Washings

Increased frequency of tank washings can increase the corrosion rate of tanks. For uncoated tanks, it is often possible to see lines of corrosion in way of the direct impingement paths of the crude oil washing machines.

(b) Composition and Properties of Cargo

- Carriage of crude oil can result in the tank surfaces in contact with the cargo being coated with a "waxy" or "oily" film, which is retained after cargo discharge. This film can reduce corrosion. Less viscous cargoes such as gasoline do not leave behind a similar film.
- Carriage of crude oil that has high sulphur content can lead to high rates for general corrosion and tank bottom pitting corrosion. By reacting with water many sulphur compounds can form acids, which are very corrosive. This will often mean that water bottom dropping out of the cargo will be acidic and corrosive.
- Carriage of cargoes with high water content can increase corrosion rates.
- Carriage of cargoes with high oxygen content (e.g. gasoline) can lead to high

corrosion rates.

- Carriage of cargoes with low pH values (acidic) can lead to high corrosion rates.

(c) Time in Ballast

- For ballast tanks where the coating has started to fail, corrosion increases with the time in ballast.

(d) Microbial Induced Corrosion

- Microbial influenced corrosion is the combination of the normal galvanic corrosion processes and the microbial metabolism. The presence of microbial metabolites generates corrosive environments, which promote the normal galvanic corrosion.
- For tanks that remain filled with contaminated ballast water for a long time, the potential for microbial induced corrosion, in the form of grooving or pitting, is increased. The microbes could penetrate pinholes and accelerate the coating breakdown and corrosion in the infected areas. Proper procedures, such as flushing with clean (open sea) salt water, will help reduce the potential for this type of corrosion.
- Cargo oil often contains residual water, which may contain microbes leading to microbial induced corrosion attacks in the tank bottom or other locations where the water may collect.
- Biocide shock treatment to exterminate the microbes is a method that could be used in cargo and ballast tanks. In addition clean water flushing at regular intervals will help reduce the potential of microbial induced corrosion. Proper maintenance of coating integrity, or blasting and coating the uncoated surfaces, would be an effective method to deal with microbial induced corrosion.

(e) Humidity of Empty Tank

Empty tanks, e.g. segregated ballast tanks during laden voyages, can have high humidity and are thus susceptible to general atmospheric corrosion, especially if corrosion control is by anodes which are ineffective during these periods.

During prolonged periods, when the tanks are left empty, such as lay-ups, maintenance of low humidity atmosphere in the tanks should be considered to minimise corrosion.

(f) Temperature of Cargo in Adjacent Bunker or Cargo Tanks

Carriage of heated cargoes may lead to increased general corrosion rates at the ballast tank side of a heated cargo tank/unladen ballast tank bulkhead. This may also apply for tanks adjacent to heated bunker tanks.

(g) Coating Breakdown

Intact coatings prevent corrosion of the steel surface.

However:

- A local absence of coating (due to coating depletion, deterioration, damage, etc.) can result in corrosion rates similar or greater than those of unprotected steel.
- Holidays or localized breakdown in coating can lead to pitting corrosion rates higher than for unprotected steel.

Periodic surveys at appropriate intervals and repair of coating as required are effective in minimising corrosion damage.

(h) Locations and Density of Anodes

- Anodes immersed in bottom water can afford protection against bottom corrosion.
- Anodes are not effective in reducing underdeck corrosion rates.
- Properly designed systems with high current densities may afford greater protection against corrosion.
- Electrical isolation or coatings, oily films, etc., on anodes can make anodes inoperative; abnormally low wastage rates of anodes may indicate this condition.

(i) Structural Design of Tank

- High velocity drainage effects can lead to increased erosion in the vicinity of cut-outs and some other structural details for uncoated surfaces.
- Horizontal internals and some details can trap water and lead to higher corrosion rates for uncoated surfaces.
- Less rigid designs, such as decreased scantlings and increased stiffener spacing, may lead to increased corrosion due to flexure effects, causing shedding of scale or loss of coating.
- Sloping tank bottoms (e.g. as with double bottom tanks) to facilitate drainage may reduce bottom corrosion by permitting full stripping of bottom waters.

(j) Gas Inerting

- Decreased oxygen content of ullage due to gas inerting may reduce corrosion of overhead surfaces.
- Sulphur oxides from flue gas inerting can lead to accelerated corrosion due to formation of corrosive sulphuric acid.

(k) Navigational Route

- Solar heating of one side of a ship due to the navigational route can lead to increased corrosion of affected wing tanks.
- Anodes used to protect ballast tanks on voyages of short duration may not be effective due to insufficient anode polarisation period when high corrosion may occur.

(l) Accelerated structural corrosion in water ballast and cargo tanks

A limited but significant number of double hull tankers have been found to be suffering from accelerated corrosion in areas of their cargo and ballast tanks. It is now generally agreed that the "thermos bottle effect", in which heated cargoes retain their loading temperatures for much longer periods, promotes an environment within the cargo and ballast tanks that is more aggressive from the viewpoint of corrosion (as temperatures rise, corrosion activity increases - warm humid salt laden atmospheres in ballast tanks, acidic humid conditions in upper cargo tank vapour spaces and warm water and steel eating microbes on cargo tank bottom areas - all factors which promote corrosion).

If corrosion remains undetected during surveys, loss of tank integrity and oil leakage into the double hull spaces may occur (increased pollution and explosion risk). In the worst cases, corrosion can lead to a major structural failure of the hull.

3.4.6 Items for Special Attention of the Surveyor

Taking into account all the possible factors, which might be relevant to a particular tank, the Surveyor should pay special attention to the following areas when looking for signs of serious corrosion:

- Horizontal surfaces such as bottom plating, face plates and stringers, particularly towards the after end of the structural element. The wastage may take the form of general corrosion or pitting. Accelerated local corrosion often occurs at the after bays and particularly in way of suctions.
- Deck heads and ullage spaces in uncoated ballast or cargo/ballast tanks (where anodes may not be effective) or non-inerted cargo tanks.
- Structure in way of lightening holes or cut-outs where accelerated corrosion may be experienced due to erosion caused by local drainage and flow patterns. Grooving may also take place on both horizontal and vertical surfaces.
- Areas in way of stress concentrations such as at toes of brackets, ends of stiffeners and around openings.
- Surfaces close to high pressure washing units where localised wastage may occur due to direct jet impingement.
- Bulkhead surfaces in ballast tanks adjacent to heated cargo or bunkers.
- Areas in way of local coating breakdown.
- One of the most effective means for preventing corrosion is to protect the hull structure with an efficient coating system. In double hulled tankers, the spaces most at risk from the effects of corrosion are the seawater ballast tanks and the underdeck structure and bottom areas within the cargo oil tanks.

3.4.7 Corrosion Trends in Tank Spaces

Depending on the tank function and location in the tank, some structural components are more susceptible to corrosion than others.

The following are some phenomena of corrosion observed in each type of tank space:

(a) Water Ballast Tank

- Necking occurs at the junction of the longitudinal bulkhead plating and longitudinals. The deflection of the bulkhead plating and longitudinals due to reverse, cyclic loading from cargo oil and water ballast plus the accumulated mixtures of water, mud and scale at their junctures accelerates the corrosion rate. As the steel thins and weakens, the flexing consequently increases and hence corrosion accelerates (see Figure 10). The similar necking effect could also occur in the transverse bulkhead plating and stiffeners, or in the inner bottom plating and longitudinals inside the double bottom space. In the coated water ballast tanks, the plating is the principally affected area due to local corrosion in way of coating failure.
- Corrosion reduces not only the strength capability but also the stiffness (to resist the deflection) of the structural components as corrosion progresses during tanker ageing. The deflection tends to crack the hard scale formation on the steel surface and to expose the fresh steel to the water. Since the loading on corroded structural components remains unchanged, as the structure becomes weaker, the deflection becomes larger and the corrosion rate accelerates.
- For partially filled ballast tanks, the water level is constantly surging in the splash zone due to the ship motions. This accelerates coating breakdown in coated ballast tanks.
- If the intake ballast water is contaminated, the lower part of the ballast tank and bottom plating in particular, might be subjected to microbial influenced corrosion, particularly in the stagnant zone due to poor drainage and mud accumulation. The by-products released by the growing sulphate reducing bacteria can be acidic, which may penetrate and destroy coating, leading to accelerated corrosion in the infected areas.

(b) Cargo Oil Tanks

Residual water settling out from cargo oil can cause the pitting and grooving corrosion in the upper surface of horizontal structural components particularly on the inner bottom plating at the aft end of tanks where water accumulates due to the ship's normal trimming by the stern. In cases where the inner bottom plating has been protected with a hard coating, local breakdown of this barrier coating can lead to accelerated pitting corrosion where residual water has been lying.

Pitting corrosion to the inner bottom plating within cargo tanks can lead to cargo leakage into the double bottom spaces (giving increased risk of explosion and pollution during ballasting operations) whilst corrosion to the under deck structure within the cargo tank area can lead to a reduction in longitudinal strength which gives rise to the possibility of a more serious structural failure occurring.

One of the best methods of preventing corrosion within these spaces is that protective coatings be applied to the underdeck and inner bottom plating areas. In addition to

protecting the steel structure in these areas, this measure would also enable easier and more effective surveys and surveys to be carried out 'in service'.

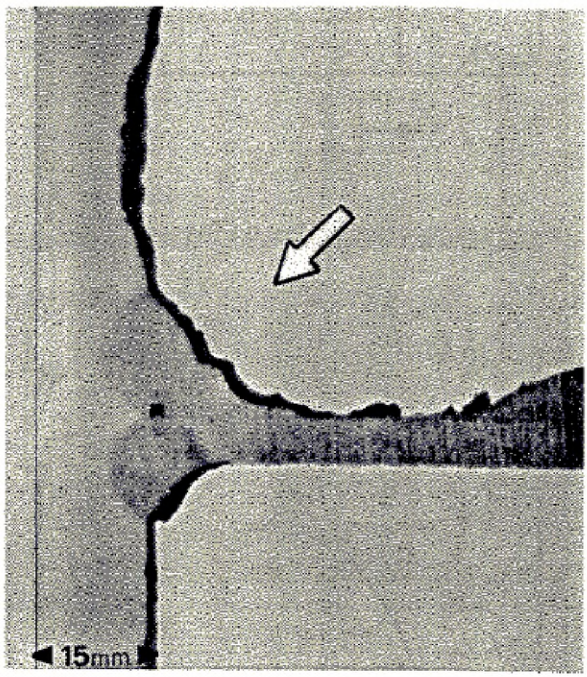

Figure 10 Detail of Necking Effect

3.4.8 In-Service Corrosion Rates

Since each tanker has a different corrosion control system, and is engaged in different trades, it usually has its own unique corrosion characteristics and its own corrosion rates.

3.4.9 Corrosion Prevention Systems

An understanding of the various options which are available to help prevent corrosion and also the limitations of each different system will assist the Surveyor in anticipating possible areas where corrosion problems may occur and thereby help to determine what remedial action may be taken to reduce the effects on structural deterioration.

If serious corrosion has already occurred, steel renewals may not be the only option available to maintain structural integrity. Installation or upgrading of a corrosion prevention system may be more attractive if the steel is within allowable loss limits.

For all types of tanker structures, the main areas, which are usually prone to severe corrosion, will be those in direct contact with seawater, such as water ballast tanks,

external hull and main deck areas. In the case of cargo oil tanks, the corrosion prevention requirements are different for crude oil or white oil products, where the latter usually requires full protection of the internal surfaces with a coating system that will be compatible with the cargo being carried and whose main function is to prevent contamination between different grades.

In general, the most common form of corrosion prevention system used in tanker structures will be the application of paint (hard) coatings to either internal or external steel works in various forms to suit the type and extent of prevention required. The basic function of a hard coating, such as paint, is to block access of water and oxygen to the steel structure itself. It follows therefore that its contact with the steel should be as good as practically achievable, i.e. it must be firmly adherent, otherwise there will always be a possibility that rust - hydrated iron oxide - will form beneath the paint and eventually rupture the paint film.

Maintaining this corrosion prevention system throughout the lifespan of the vessel is therefore an important feature in the initial choice of materials and will also be a measure of the continuing structural integrity of the vessel itself.

Potential corrosion of the internal structure in water ballast tanks is by far the most serious aspect of tanker maintenance and the prevention systems normally associated with these spaces can generally be grouped under three categories, i.e.

- Hard coatings (epoxy, vinyl, zinc silicate, bitumastic, etc.);
- Soft Coatings;
- Cathodic protection (zinc/aluminium anodes) (Note: Not subject to Classification Surveys).

The following text gives a brief description of each type of system but is not intended as an exhaustive evaluation.

(a) Hard Coatings

The very nature of this form of corrosion prevention system is to form a protective barrier on the steel surface, which will provide a semi-permeable membrane to protect against the elements of corrosion. Any subsequent breakdown of this 'barrier' will, however, allow the normal corrosion process to take place, and usually at a much more accelerated rate due to the limited surface area being exposed.

This problem is, therefore, very similar to that of local pitting corrosion, where, if early action is not taken, the overall integrity of the structure will be put at risk.

Further increases in the extent of breakdown of this 'barrier' will, however, reach a stage where the system is no longer considered effective and general corrosion of the structure is taking place.

If properly applied on blast-cleaned surfaces, recognised coating types, such as those on an epoxy basis, should obtain a durability of at least 10 years service life.

Sacrificial type coatings such as inorganic zinc provide 'metal' that is anodic to the steel surface and will protect the steel cathodically.

(b) Soft Coatings

The effectiveness of these types of protective coatings is usually much more difficult to judge, especially those relying on chemical reactions with the steel surface.

By their very nature, the effective life of some of the protection systems is usually restricted to about one to three years only, before further maintenance and touch-up is required. Visual assessment of their existing condition can also be very difficult and somewhat misleading, especially if these have been used to cover-up already severely corroded areas of the structure.

Other typical problems that have been found with the use of soft coatings for ballast tank protection have been in respect to:

- Their 'greasy' nature, which makes physical survey very difficult, and may adversely impact safety.
- Their 'oily' base, which can contaminate the discharge of ballast water.
- Potential sagging of thick coatings attached to hot surfaces.
- Some vegetable based coatings are incompatible with sacrificial anodes.
- When exposed to mineral oil, some lanolin-based coatings go into an emulsion state requiring removal for hot-work or pollution risk.
- Soft coatings on horizontal surfaces will be damaged whenever any mucking out of sediment is carried out in the ballast tank.
- In the event of hot-work/welding on the outside or inside of coated plates, careful removal of the soft coating is necessary to prevent the risk of fires or explosions due to the potential build-up of gas when the coating is heated.

Much of the success with these soft coatings has usually been in connection with void spaces or water ballast tanks where there is a long retention time of the ballast (as in semi-submersibles). However, regular changes of ballast water, as in tanker operations, has the effect of depleting the amount of soft protection on the internal surfaces. For this reason, these protection systems should really be regarded as temporary and should be subjected to more regular and comprehensive thickness gauging and close-up surveys than that considered for hard coatings.

(c) Cathodic Protection (Sacrificial Anodes)

The principle of cathodic protection is to sacrifice the anodes in preference to the surrounding steel structures, and, therefore, relies entirely on these areas being

immersed in seawater before this action can take place.

Anode material is generally zinc. Other types of materials, for example aluminium, are limited because of the danger of sparks when dropped or struck, although these materials do offer better current output for the same weight. The use of anodes of aluminium have an installation height restriction in cargo tanks equivalent to a potential energy of 275 Joules which effectively limits their use to bottom structure and requires that falling objects do not strike them.

The consumption rates and replacement of depleted anodes will not always be a true indication of the effectiveness of the corrosion protection system. Only regular and comprehensive visual and gauging surveys of the structure will give a correct assessment of effectiveness. Sacrificial anodes used as backup protection to a hard coating system do, however, have the benefit of controlling the accelerated rates of corrosion in way of any breakdown, but, again will only be effective when immersed in seawater. Recoating of any breakdown areas may still be required, but probably at a later date than without these back-up anodes.

(d) Selection of Corrosion Prevention System

The choice of Corrosion Prevention systems for water ballast tanks has, in the past, been determined by either the Shipowner or Shipbuilder. IACS UR Z8 requires coating in ballast tanks on new vessels. The continued effectiveness of these corrosion prevention systems must be monitored throughout the service life of the ship by regular assessment of the condition of the steel structure, which is being protected.

For hard coating prevention systems applied at new building, this thickness determination need only be monitored in way of any localised breakdown where accelerated corrosion of the exposed steel structure may be anticipated.

With soft coatings, semi-hard coatings or sacrificial anodes, more frequent and extensive gauging surveys will be needed to assess the overall wastage rates in these tanks, and will generally be more difficult to survey in the later stages of the ship's service life.

In view of the importance of preserving this structural integrity, effective maintenance programs should be set up from commencement of service to repair and replace the corrosion prevention system as it deteriorates.

3.4.10 Fractures

In most cases fractures are found at locations where stress concentration occurs. Weld defects, flaws, and where lifting fittings used during ship construction are not properly removed are often areas where fractures are found. If fractures occur under repeated stresses, which are below the yielding stress, the fractures are called fatigue fractures. In addition to the cyclic stresses induced by wave forces, fatigue fractures can also result from vibration forces introduced by main engine(s) or propeller(s), especially in the aft

part of the hull.

Some fractures may not be readily visible due to lack of cleanliness, difficulty of access, poor lighting or compression of the fracture surfaces at the time of survey. It is therefore important to identify and closely inspect potential problem areas. Fractures will normally initiate at notches, stress concentrations or welds especially those with defects. Where these initiation points are not apparent on one side, the structure on the other side of the plating should be surveyed.

Fracture initiating at latent defects in welds more commonly appears at the beginning or end of a run of welds, or rounding corners at the end of a stiffener, or at an intersection. Special attention should be paid to welds at toes of brackets, at cut-outs, and at intersections of welds. Fractures may also be initiated by undercutting the weld in way of stress concentrations.

It should be noted that fractures, particularly fatigue fractures due to repeated stresses, may lead to serious damages, e.g. a fatigue fracture in a side shell longitudinal may propagate into shell plating and affect the watertight integrity of the hull.

3.4.11 Deformations

Deformation of structure is caused by in-plane load, out-of-plane load or combined loads. Such deformation is often identified as local deformation, i.e. deformation of panel or stiffener, or global deformation, i.e. deformation of beam, frame, girder or floor, including associated plating.

If in the process of the deformation large deformation is caused due to small increase of the load, the process is called buckling.

Deformations are often caused by impact loads/contact and inadvertent overloading. Damages due to bottom slamming and wave impact forces are, in general, found in the forward part of the hull, although stern seas (pooping) have resulted in damages in way of the aft part of the hull.

In the case of damages due to contact with other objects, special attention should be drawn to the fact that although damages to the shell plating may look small from the outboard side, in many cases the internal members are heavily damaged and the coating effectiveness compromised.

Permanent buckling may arise as a result of overloading, overall reduction in thickness due to corrosion, or contact damage. Elastic buckling will not normally be directly obvious but may be detected by evidence of coating damage, stress lines or shedding of scale. Buckling damages are often found in webs of web frames or floors. In many cases, this may be attributed to corrosion of webs/floors, wide stiffener spacing or wrongly positioned lightening holes, man-holes or slots in webs/floors.

3.5 Structural detail failures and repairs

3.5.1 For examples of structural defects, which have occurred in service, attention is

drawn to Chapter **5** of these guidelines. It is suggested that Surveyors should be familiar with the contents of Chapter **5** before undertaking a survey.

3.5.2 For Classification requirements related to prompt and thorough repairs refer to **2.6.1**.

3.5.3 In general, where part of the structure has deteriorated to the permissible minimum thickness, then the affected area is to be cropped and renewed. Generally doubler plates should not be used for the compensation of wasted plate. Repair work in tanks requires careful planning in terms of accessibility. Refer to Part B of IACS Recommendation 47, Shipbuilding and Repair Quality Standard.

3.5.4 If replacement of defective parts must be postponed, temporary measures may be acceptable at the Surveyor's discretion and a suitable condition of class will be imposed.

4 Survey programme, preparation and execution

4.1 General

4.1.1 The owner should be aware of the scope of the coming survey and instruct those who are responsible, such as the master or the superintendent, to prepare necessary arrangements. If there is any doubt, the Classification Society concerned should be consulted.

4.1.2 Survey execution will naturally be heavily influenced by the type of survey to be carried out. The scope of survey will have to be determined prior to the execution.

4.1.3 The Surveyor should study the ship's structural arrangements and review the ship's operation and survey history and those of sister ships where possible, to identify any known potential problem areas particular to the type of ships. Sketches of typical structural elements should be prepared in advance so that any defects and/or ultrasonic thickness measurements can be recorded rapidly and accurately.

4.2 Survey Programme

4.2.1 The Owner in co-operation with the Classification Society is to work out a specific Survey Programme prior to commencement of any part of:

- the Special Survey;
- the Intermediate Survey for oil tankers over 10 years of age.

4.2.2 The Survey Programme is to be in a written format. The Survey programme at Intermediate Survey may consist of the Survey Programme at the previous Special Survey supplemented by the Executive Hull Summary of that Special Survey and later relevant survey reports.

The Survey Program is to be worked out taking into account any amendments to the survey requirements implemented after the last Special Survey carried out.

4.2.3 The Survey Programme should account for and comply with the requirements for close-up examinations, thickness measurements and tank testing, and take into consideration the conditions for survey, access to structures, cleanliness and illumination of tanks, and equipment for survey, respectively, and is to include relevant information including at least:

- basic ship information and particulars;
- main structural plans (scantling drawings), including information regarding the use of high tensile steels (HTS);
- plan of tanks;
- list of tanks with information on use, corrosion prevention and condition of coating;

- conditions for survey (e.g., information regarding tank cleaning, gas freeing, ventilation, lighting, etc.);
- provisions and methods for access to structures;
- equipment for surveys;
- nomination of tanks and areas for close-up survey;
- nominations of sections for thickness measurement;
- nomination of tanks for tank testing;
- damage experience related to the ship in question.

4.2.4 In developing the Survey Programme, the following documentation is to be collected and consulted with a view to selecting tanks, areas, and structural elements to be examined:

- survey status and basic ship information;
- documentation on-board, as described in 4.10;
- main structural plans (scantlings drawings), including information regarding the use of high tensile steels (HTS);
- relevant previous survey and inspection reports from both Classification Society and the Owner;
- information regarding the use of the ship's tanks, typical cargoes and other relevant data;
- information regarding corrosion prevention level on the new-building;
- information regarding the relevant maintenance level during operation.

4.2.5 In developing the Survey Programme, the Classification Society will advise the Owner of the maximum acceptable structural corrosion diminution levels applicable to the vessel.

4.2.6 Minimum requirements regarding close-up surveys and thickness measurements are stipulated in IACS Unified Requirement Z10.4.

4.3 Survey Planning Meeting

4.3.1 Prior to the commencement of any part of the Special Survey and Intermediate Survey a survey planning meeting is to be held between the attending Surveyor(s), the Owner's Representative in attendance and the TM company representative, where involved.

4.4 Conditions for survey

4.4.1 The owner is to provide the necessary facilities for a safe execution of the survey.

4.4.2 Tanks and spaces are to be safe for access, i.e. gas freed, ventilated and illuminated.

4.4.3 In preparation for survey and thickness measurements and to allow for a thorough examination, all spaces are to be cleaned including removal from surfaces of all loose accumulated corrosion scale. Spaces are to be sufficiently clean and free from water, scale, dirt, oil residues, etc. to reveal corrosion, deformation, fractures, damages, or other structural deterioration. However, those areas of structure whose renewal has already been decided by the owner need only be cleaned and descaled to the extent necessary to determine the extent of the areas to be renewed.

4.4.4 Sufficient illumination is to be provided to reveal significant corrosion, deformation, fractures, damages or other structural deterioration.

4.5 Access Arrangements and Safety

4.5.1 In accordance with the intended survey, measures are to be provided to enable the hull structure to be surveyed and thickness measurement carried out in a safe and practical way.

4.5.2 For close-up surveys in a cargo tank and ballast tanks, one or more of the following means for access, acceptable to the Surveyor, are to be discussed in the planning stage and provided:

a) permanent staging and passages through structures;
b) temporary staging, e.g. ladders and passages through structures;
c) lifts and movable platforms;
d) boats or rafts; and
e) other equivalent means.

4.5.3 In addition, particular attention should be given to the following guidance:

(a) Prior to entering tanks and other closed spaces, e.g. chain lockers, void spaces, it is necessary to ensure that the oxygen content has been tested and confirmed as safe. A responsible member of the crew should remain at the entrance to the space and if possible communication links should be established with both the bridge and engine room. Adequate lighting should be provided in addition to a hand held torch (flashlight).

(b) In tanks where the structure has been coated and recently de-ballasted, a thin slippery film may often remain on the surfaces. Care should be taken when inspecting such spaces.

(c) The removal of scale may be extremely difficult. The removal of scale by hammering may cause sheet scale to fall, and in cargo tanks this may result in residues of cargo falling from above. When using a chipping or scaling hammer care should be taken to protect eyes, and where possible safety glasses should be worn. If the structure is heavily scaled then it may be necessary to request de-scaling before conducting a satisfactory visual examination.

(d) When entering a cargo or ballast tank the access ladders and permanent access if fitted should be examined prior to being used to ensure that they are in good condition and rungs/platforms are not missing or loose. One person at a time should descend or ascend the ladder.

(e) If a portable ladder is used for survey purposes, the ladder should be in good

condition and fitted with adjustable feet, to prevent it from slipping. Refer to IACS Recommendation 78, Safe Use of Portable Ladders for Close-Up Surveys.

(f) Staging is the most common means of access provided especially where repairs or renewals are being carried out. It should always be correctly supported and fitted with handrails. Planks should be free from splits and lashed down. Staging erected hastily by inexperienced personnel should be avoided.

(g) In double bottom tanks there will often be a build up of mud on the bottom of the tank and this should be removed, in particular in way of tank boundaries, suction and sounding pipes, to enable a clear assessment of the structural condition.

(h) For ships built in compliance with SOLAS 74 (as amended) Regulation II-1/3-6, the approved ship structure access manual should be consulted before the survey.

4.5.6 Ventilation and Inerting Requirements for Double Hull Spaces

Due to the cellular construction of the double hull tanker, proper means of ventilation should be provided to avoid the accumulation of noxious or flammable gases, and to ensure a continuous safe environment for inspection and maintenance. It is also necessary to provide means of inerting and purging ballast tanks in the event of oil leak or hydrocarbon gas presence.

The most common method to provide a safe condition for personnel entry into double hull water ballast tanks is by ballasting and subsequently emptying the tank, thus allowing fresh air to fill all cellular compartments. However, this method may not be feasible during cargo laden voyages due to loadline, longitudinal strength and local strength limitations.

Conventional Tank Ventilation Method

Conventional means of tank ventilation and gas freeing by blowing fresh air through deck openings is effective for vertical side tanks and "U" shaped ballast tanks, but it is inadequate for "L" or "J" shaped ballast tanks

Ventilation by Ballast Pipe

One method of ballast tank venting and gas freeing is to supply fresh air through the ballast piping system. The inert gas fan can be used for the gas freeing operation. However, a separate ventilation fan should be provided to supply the fresh air for tank entry. This method has a significant drawback during cargo loading and discharging operations, since the ballast piping will be needed for ballast transfer, and will not be available for venting and gas freeing.

Ventilation by Purge Pipe

Another method of ballast tank venting and gas freeing is the use of portable gas freeing fans mounted on top of purge pipes to remove air from double bottom spaces. The fresh air is pulled down into the tank through open tank hatches on deck. Each purge pipe should extend from the upper deck to the double bottom space, and be lead inboard to the ship's centreline. This method is most effective for "L" or "J" shaped ballast tanks to allow fresh air to reach every corner in the double bottom space.

Inerting by Deck Inert Gas Lines

A method of inerting ballast tanks is to supply the inert gas by portable flexible ducts from the inert gas main lines on deck through access hatches and/or tank cleaning hatches. Alternatively, fixed gas deck branch lines may be installed. The tank atmosphere changing methods will be identical as for venting and gas freeing. Purge pipes will be needed for "L" and "J" shaped ballast tanks.

4.6 Use of Boats or Rafts

4.6.1 A communication system is to be arranged between the survey party in the tank and the responsible officer on deck. This system must also include the personnel in charge of ballast pump handling.

4.6.2 Explosimeter, oxygen-meter, breathing apparatus, lifeline and whistles are to be at hand during the survey. When boats or rafts are used, appropriate life jackets are to be available for all participants. Boats or rafts are to have satisfactory residual buoyancy and stability even if one chamber is ruptured. A safety checklist is to be provided.

4.6.3 Surveys of tanks by means of boats or rafts may only be undertaken at the sole discretion of the Surveyor, who is to take into account the safety arrangements provided, including weather forecasting and ship response under foreseeable conditions and provided the expected rise of water within the tank does not exceed 0.25 metres.

4.6.4 Rafts or boats alone may be allowed for survey of the under deck areas for tanks or spaces, if the depth of the webs is 1.5 m or less.

If the depth of the webs is more than 1.5 m, rafts or boats alone may be allowed only:

.1 when the coating of the under deck structure is in GOOD condition and there is no evidence of wastage; or

.2 if a permanent means of access is provided in each bay to allow safe entry and exit. This means:

- .1 access direct from the deck via a vertical ladder and a small platform fitted approximately 2 m below the deck in each bay; or
- .2 access to deck from a longitudinal permanent platform having ladders to deck in each end of the tank. The platform shall, for the full length of the tank, be arranged in level with, or above, the maximum water level needed for rafting of under deck structure. For this purpose, the ullage corresponding to the maximum water level is to be assumed not more than 3m from the deck plate measured at the midspan of deck transverses and in the middle length of the tank. See Figure 11.

If neither of the above conditions are met, then staging or an "other equivalent means" is

to be provided for the survey of the under deck areas.

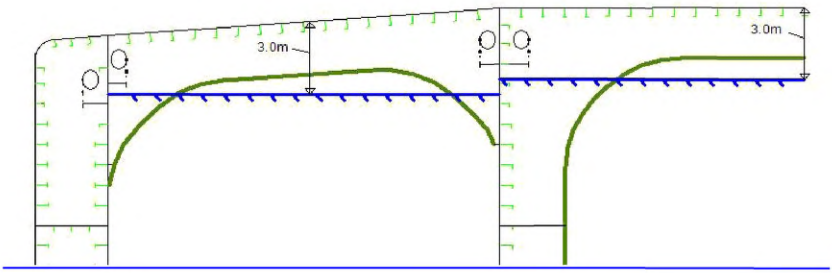

Figure 11

The use of rafts or boats alone does not preclude the use of boats or rafts to move about within a tank during a survey.

Reference is made to IACS Recommendation 39 - Guidelines for the Safe Use of Rafts or Boats for Close-up surveys.

4.7 Personal equipment

4.7.1 The following protective clothing and equipment to be worn as applicable during the surveys:

(a) Working clothes: Working clothes should be of a low flammability type and be easily visible.

(b) Head protection: Hard hat (metal hats are not allowed) shall always be worn outside office buildings/unit accommodations.

(c) Hand and arm protection: Various types of gloves are available for use, and these should be used during all types of surveys. Rubber/plastic gloves may be necessary when working in cargo tanks.

(d) Foot protection: Safety shoes or boots with steel toe caps and non slip soles shall always be worn outside office buildings/unit accommodations. Special footwear may be necessary on slippery surfaces or in areas with chemical residues.

(e) Ear protection: Ear muffs or ear plugs are available and should be used when working in noisy areas. As a general rule, you need ear protection if you have to shout to make yourself understood by someone standing close to you.

(f) Eye protection: Goggles should always be used when there is danger of getting solid particles or dust into the eyes. Protection against welding arc flashes and ultraviolet light should also be considered.

(g) Breathing protection: Dust masks shall be used for protection against the breathing of harmful dusts, paint spraying and sand blasting. Gas masks and filters should be used by personnel working for short periods in an atmosphere polluted by gases or vapour.
(Self-contained breathing apparatus: Surveyors shall not enter spaces where such equipment is necessary due to unsafe atmosphere. Only those who are specially

trained and familiar with such equipment should use it and only in case of emergency).

(h) Lifejacket: Recommended to be used when embarking/disembarking ships offshore from/to pilot boat.

4.7.2 The following survey equipment is to be used as applicable during the surveys:

(a) Torches: Torches (Flashlights) approved by a competent authority for use in a flammable atmosphere shall be used in gas dangerous areas. High intensity beam type is recommended for in-tank surveys. Torches are recommended to be fitted with suitable straps so that both hands may be free.

(b) Hammer: In addition to its normal purposes the hammer is recommended for use during surveys inside tanks etc. as it may be most useful for the purpose of giving distress signal in case of emergency.

(c) Oxygen analyser/Multigas detector: For verification of acceptable atmosphere prior to tank entry, pocket size instruments which give audible alarm when unacceptable limits are reached are recommended. Such equipment shall have been approved by national authorities.

(d) Safety belts and lines: Safety belts and lines should be worn where high risk of falling down from more than 3 metres is present.

4.8 Thickness measurement and fracture detection

4.8.1 Thickness measurement is to comply with the requirements of the Classification Society concerned. Thickness measurement should be carried out at points that adequately represent the nature and extent of any corrosion or wastage of the respective structure (plate, web, etc.). Thickness measurements of structures in areas where close-up surveys are required shall be carried out simultaneously with the close-up surveys.

4.8.2 Thickness measurement is normally carried out by means of ultrasonic test equipment. The accuracy of the equipment is to be proven as required.

4.8.3 Thickness measurements required, if not carried out by the Society itself are to be witnessed by a Surveyor on board to the extent necessary to control the process.

4.8.4 A thickness measurement report is to be prepared. The report is to give the location of measurements, the thickness measured as well as corresponding original thickness. Furthermore, the report is to give the date when the measurements were carried out, type of measurement equipment, names of personnel and their qualifications and has to be signed by the operator. Upon completion of the thickness measurements onboard, the Surveyor should verify and keep a copy of the preliminary thickness measurement report signed by the operator until such time as the final report is received. The Surveyor is to review the final thickness measurement report and countersign the cover sheet.

4.8.5 The thickness measurement company should be part of the survey planning meeting to be held prior to the survey.

4.8.6 One or more of the following fracture detection procedures may be required if deemed necessary and should be operated by experienced qualified technicians:

(a) radiographic equipment
(b) ultrasonic equipment
(c) magnetic particle equipment
(d) dye penetrant

4.9 Survey at sea or at anchorage

4.9.1 Voyage surveys may be accepted provided the survey party is given the necessary assistance from the shipboard personnel. The necessary precautions and procedures for carrying out the survey are to be in accordance with **4.1** to **4.8** inclusive. Ballast, cargo and inert gas piping systems must be secured at all times during tank surveys.

4.9.2 A communication system is to be arranged between the survey party in the spaces under examination and the responsible officer on deck.

4.10 Documentation on board

4.10.1 The following documentation is to be placed on board and maintained and updated by the owner for the life of ship in order to be readily available for the survey party.

4.10.2 Survey Report File: This file includes Reports of Structural Surveys, Executive Hull Summary and Thickness Measurement Reports.

4.10.3 Supporting Documents: The following additional documentation is to be placed on board, including any other information that will assist in identifying Suspect Areas requiring examination:

- Survey Programme as required by **4.2** until such time as the Special Survey or Intermediate Survey, as applicable, has been completed;
- main structural plans of cargo and ballast tanks;
- previous repair history;
- cargo and ballast history;
- extent of use of inert gas plant and tank cleaning procedures;
- surveys by ship's personnel;
- structural deterioration in general;
- leakage in bulkheads and piping;
- condition of coating or corrosion prevention system, if any;
- any other information that will help identify Suspect Areas requiring survey.

4.10.4 Prior to survey, the completeness of the documentation onboard, and its contents as a basis for the survey should be examined.

4.11 Reporting and Evaluation of Survey

4.11.1 The data and information on the structural condition of the vessel collected during the survey is to be evaluated for acceptability and continued structural integrity of the vessel.

4.11.2 In case of oil tankers of 130 m in length and upwards (as defined in the International Convention on Load Lines in force), the ship's longitudinal strength is to be evaluated by using the thickness of structural members measured, renewed and reinforced, as appropriate, during the special survey carried out after the ship reached 10 years of age in accordance with the criteria for longitudinal strength of the ship's hull girder for oil tankers.

4.11.3 The final result of evaluation of the ship's longitudinal strength required in 4.11.2, after renewal or reinforcement work of structural members, if carried out as a result of initial evaluation, is to be reported as a part of the Executive Hull Summary.

4.11.4 As a principle, for oil tankers subject to ESP, the Classification Society Surveyor is to include the following content in his report for survey of hull structure and piping systems, as relevant for the survey.

.1 General

1.1 A survey report is to be generated in the following cases:

- In connection with commencement, continuation and / or completion of periodical hull surveys, i.e. annual, intermediate and special surveys, as relevant.
- When structural damages / defects have been found.
- When repairs, renewals or modifications have been carried out.
- When condition of class (recommendation) has been imposed or deleted.

1.2 The purpose of reporting is to provide:

- Evidence that prescribed surveys have been carried out in accordance with applicable classification rules.
- Documentation of surveys carried out with findings, repairs carried out and condition of class (recommendation) imposed or deleted.
- Survey records, including actions taken, which shall form an auditable documentary trail. Survey reports are to be kept in the survey report file required to be on board.
- Information for planning of future surveys.
- Information which may be used as input for maintenance of classification rules and instructions.

.2 Extent of Survey

The extent of the survey in the report is to include the following:

- Identification of compartments where an overall survey has been carried out.
- Identification of locations, in each tank, where a close-up survey has been carried out, together with information of the means of access used.
- Identification of locations, in each tank, where thickness measurement has been carried out.
- For areas in tanks where protective coating is found to be in GOOD condition and the extent of close-up survey and / or thickness measurement has been specially considered, structures subject to special consideration are to be identified.
- Identification of tanks subject to tank testing.
- Identification of cargo piping on deck, including crude oil washing (COW) piping, and cargo and ballast piping within cargo and ballast tanks, pump rooms, pipe tunnels and void spaces, examined and where operational test to working pressure has been carried out.

.3 Result of the survey

Type, extent and condition of protective coating in each tank, as relevant (rated GOOD, FAIR or POOR).

Structural condition of each compartment with information on the following, as relevant:

Identification of findings, such as:

- Corrosion with description of location, type and extent;
- Areas with substantial corrosion;
- Cracks / fractures with description of location and extent;
- Buckling with description of location and extent;
- Indents with description of location and extent;
- Identification of compartments where no structural damages/defects are found.

The report may be supplemented by sketches/photos.

Evaluation result of longitudinal strength of the hull girder of oil tankers of 130 m in length and upwards and over 10 years of age. The following data is to be included, as relevant:

- Measured and as-built transverse sectional areas of deck and bottom flanges;
- Diminution of transverse sectional areas of deck and bottom flanges;
- Calculation of the transverse section modulus of hull girder, as relevant;
- Details of renewals or reinforcements carried out, as relevant (as per 4.2).

.4 Actions taken with respect to findings

Whenever the attending Surveyor is of the opinion that repairs are required, each item to be repaired is to be identified in a numbered list. Whenever repairs are

carried out, details of the repairs effected are to be reported by making specific reference to relevant items in the numbered list.

Repairs carried out are to be reported with identification of:

- Compartment
- Structural member
- Repair method (i.e. renewal or modification)
- Repair extent
- NDT / Tests

For repairs not completed at the time of survey, condition of class (recommendation) is to be imposed with a specific time limit for the repairs. In order to provide correct and proper information to the Surveyor attending for survey of the repairs, condition of class (recommendation) is to be sufficiently detailed with identification of each item to be repaired.

For identification of extensive repairs, reference may be given to the survey report.

4.11.5 An Executive Hull Summary of the survey and results is to be issued to the Owner and placed on board the vessel for reference at future surveys. The Executive Hull Summary is to be endorsed by the Classification Society's head office or regional managerial office.

5 Structural detail failures and repairs

5.1 General

5.1.1 The catalogue of structural detail failures and repairs contained in this section of the Guidelines collates data supplied by the IACS Member Societies and is intended to provide guidance when considering similar cases of damage and failure. The proposed repairs reflect the experience of the Surveyors of the Member Societies, but it is realized that other satisfactory alternative methods of repair may be available. However, in each case the repairs are to be completed to the satisfaction of the Classification Society Surveyor concerned. Identified reoccurring failures after repairs may require further investigation.

5.2 Actions to be taken by the Classification Society when Fatigue Failures have been Identified

5.2.1 Whenever a fatigue failure has been identified on a ship a detailed structural survey with close-up examination of similar locations on that ship should be carried out.

5.2.2 Assessment of fatigue failures should be carried out by the Classification Society when fatigue failures are identified in the cargo area in the following cases:

a. Ships 5 years of age and less.
b. Ships 10 years of age and less when the fatigue failure occurs in the structural details, which are present in a large number onboard the ship or when the fatigue failure may have serious consequences.
c. When similar fatigue failures have been identified on sister ships 10 years of age and less.

In ships more than 10 years of age fatigue failure assessment may be waived at the discretion of the Classification Society.

5.2.3 Assessment of fatigue failure implies structural analysis to be carried out with a scope of:

a. The possible cause of failure;
b. The need for proactive repairs, reinforcements and/or modifications;
c. The most effective and practical repair;
d. The need for detailed structural surveys on sister/similar ships as defined in IACS Procedural Requirement No. 2.

The structural analysis may be carried out by means of simple beam or finite element analysis.

5.2.4 The proactive measures identified in the structural assessment are to be carried out to the satisfaction of the Classification Society.

5.2.5 If applicable the requirements of IACS Procedural Requirement PR 2, "Procedure for Failure Incident Reporting and Early Warning of Serious Failure Incidents – IACS Early Warning Scheme- EWS" are to be applied.

5.3 Catalogue of structural detail failures and repairs

5.3.1 The catalogue has been sub-divided into groups to be given particular attention during the surveys:

Group No.	Description of Structural Group
1	Bilge Hopper
2	Wing Ballast Tank
3	Bottom Ballast Tank
4	Web Frames in Cargo Tanks
5	Transverse Bulkheads in Cargo Tank
6	Deck Structure
7	Fore and Aft End Regions
8	Machinery and Accommodation Spaces

Group 1 Bilge Hopper

Contents

1 General

2 What to look for – Bilge Hopper Plating survey
- 2.1 Material wastage
- 2.2 Deformations
- 2.3 Fractures

3 What to look for - Hopper Tank survey
- 3.1 Material wastage
- 3.2 Deformations
- 3.3 Fractures

4 What to look for - External bottom survey
- 4.1 Material wastage
- 4.2 Deformations
- 4.3 Fractures

5 General comments on repair
- 5.1 Material wastage
- 5.2 Deformations
- 5.3 Fractures

Examples of structural detail failures and repairs – Group 1

Example No.	Title
1	Fracture on the inner bottom plating at the connection of hopper plate to inner bottom
2	Fracture at connection of bilge hopper plate and inner bottom
3	Fracture at connection of bilge hopper plate and inner bottom
4	Fracture at connection of bilge hopper plate and inner bottom
5	Fractured floor and inner bottom plate in way of juncture of inner bottom to hopper plate
6	Fracture at connection of bilge hopper plate and web frame
7	Rounded hopper plate deformation in way of the floor
8	Fracture at the connection of hopper plate to outside longitudinal bulkhead
9	Fracture in gusset plate in line with inner bottom
10	Fracture in way of cut-out in hopper plate

1 General

1.1 The bilge hopper together with the double bottom and double side tanks and spaces, protect the cargo tanks or spaces, and are not to be used for the carriage of oil cargoes.

1.2 In addition to general corrosion, the welds and connections of the tank top/hopper sloping plating may be prone to fatigue.

1.3 The bilge hopper contributes to the longitudinal hull girder strength and supports the double bottom and double side construction.

1.4 Weld defects and/or misalignment between hopper plate, inner bottom and longitudinal girder may lead to problems in view of the stress concentrations at this juncture. This may also be the case at the upper end of the hopper plate connection with the inner hull longitudinal bulkhead and horizontal girder.

2 What to look for – Bilge Hopper Plating survey

2.1 Material wastage

2.1.1 The general corrosion condition of the bilge hopper structure may be observed by visual survey. The level of wastage of bilge hopper plating may have to be established by means of thickness measurement.

2.2 Deformations

2.2.1 Buckling of the bilge hopper plating may occur between longitudinals in areas subject to in-plane transverse compressive stresses or between floors in areas subject to in-plane longitudinal compressive stresses.

2.2.2 Whenever deformations are observed on the bilge hopper, further survey in the double bottom tanks is imperative in order to determine the extent of the damage. The deformation may cause the breakdown of coating within the double bottom, which in turn may lead to accelerated corrosion rate in these unprotected areas.

2.3 Fractures

2.3.1 Fractures will normally be found by close-up survey. Fractures that extend through the thickness of the plating or through the welds may be observed during pressure testing of the double bottom tanks.

3 What to look for - Hopper Tank survey

3.1 Material wastage

3.1.1 The level of wastage of hopper side internal structure (longitudinals, transverses, floors, girders, etc.) may have to be established by means of thickness measurements.

Rate and extent of corrosion depends on the corrosive environment, and protective measures employed, such as coatings and sacrificial anodes. The following structures are generally susceptible to corrosion (also see **3.1.2** - **3.1.3**).

(a) Structure in corrosive environment:
- Transverse bulkhead and girder adjacent to heated fuel oil or cargo oil tanks.

(b) Structure subject to high stress:
- Face plates and web plates of transverse at corners;
- Connection of longitudinal to transverse.

(c) Areas susceptible to coating breakdown
- Back side of face plate of longitudinal;
- Welded joint;
- Edge of access opening.

(c) Areas subject to poor drainage:
- Web of side longitudinals.

3.1.2 If the protective coating is not properly maintained, structure in the ballast tank may suffer severe localised corrosion. Transverse webs in the hopper tanks may suffer severe corrosion at their corners where high shearing stresses occur, especially where collar plate is not fitted to the slot of the longitudinal.

3.1.3 The high temperature due to heated cargo oil tanks may accelerate corrosion of ballast tank structure near heated cargo oil tanks. The rate of corrosion depends on several factors such as:

- Temperature and heat input to the ballast tank.
- Condition of original coating and its maintenance.
- Ballasting frequency and operations.
- Age of ship and associated stress levels as corrosion reduces the thickness of the structural elements and can result in fracturing and buckling.

3.2 Deformations

3.2.1 Where deformations are identified during bilge hopper plating survey (See **2.2**) and external bottom survey (See **4.2**), the deformed areas should be subjected to in tank survey to determine the extent of the damage to the coating and internal structure.

Deformations in the structure not only reduce the structural strength but may also cause breakdown of the coating, leading to accelerated corrosion.

3.3 Fractures

3.3.1 Fractures will normally be found by close-up survey.

3.3.2 Fractures may occur in way of the welded or radiused knuckle between the inner bottom and hopper sloping plating if the side girder in the double bottom is not in line with the knuckle and also when the floors below have a large spacing, or when corner scallops are created for ease of fabrication. The local stress variations due to the loading and subsequent deflection may lead to the development of fatigue fractures which can be categorised as follows:

(a) Parallel to the knuckle weld for those knuckles which are welded and not radiused.

(b) In the inner bottom and hopper plating and initiated at the centre of a radiused knuckle.

(c) Extending in the hopper web plating and floor weld connections starting at the corners of scallops, where such exist, in the underlying hopper web and floor.

(d) Extending in the web plate as in (c) above but initiated at the edge of a scallop.

3.3.3 The fractures in way of connection of inner bottom plating/hopper sloping plating to stool may be caused by the cyclic deflection of the inner bottom induced by repeated loading from the sea or due to poor "through-thickness" properties of the inner bottom plating. Scallops in the underlying girders can create stress concentrations which further increase the risk of fractures. These can be categorised as follows: (See also **Examples of Structure Detail Failures of this Group**).

(a) In way of the intersection between inner bottom and stool. These fractures often generate along the edge of the welded joint above the centre line girder, side girders, and sometimes along the duct keel sides.

(b) Fractures in the inner bottom longitudinals and the bottom longitudinals in way of the intersection with the watertight floors below the transverse bulkhead stools.

(c) Fractures at the connection between the longitudinals and the vertical stiffeners or brackets on the floors.

(d) Lamellar tearing of the inner bottom plate below the weld connection with a lower stool caused by high bending stresses. The size of stool and lack of full penetration welds could also be a contributory factor, as well as poor "through-thickness" properties of the tank top plating.

3.3.4 Transition region

In general, the termination of the following structural members at the collision bulkhead and engine room forward bulkhead is prone to fractures:

- Hopper tank sloping plating
- Panting stringer in fore peak tank
- Inner bottom plating in engine room

In order to avoid stress concentration due to discontinuity appropriate stiffeners are to be provided in the opposite space. If such stiffeners are not provided, or are deficient due to corrosion or misalignment, fractures may occur at the terminations.

4 What to look for - External bottom survey

4.1 Material wastage

4.1.1 Hull structure below the water line can usually be inspected only when the ship is dry-docked. The opportunity should be taken to inspect the external plating thoroughly. The level of wastage of the bottom plating may have to be established by means of thickness measurements.

4.1.2 Severe grooving along welding of bottom plating is often found (See **Photographs 1** and **2**). This grooving can be accelerated by poor maintenance of the protective coating and/or sacrificial anodes fitted to the bottom plating.

4.1.3 Bottom or "docking" plugs should be carefully examined for excessive corrosion along the edge of the weld connecting the plug to the bottom plating

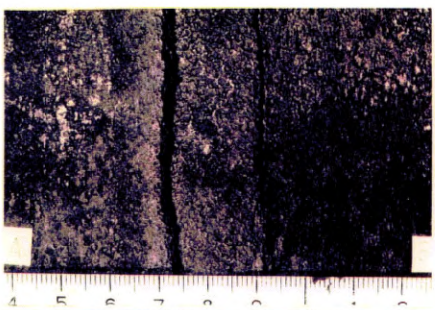

Photograph 1
Grooving corrosion of welding of bottom plating

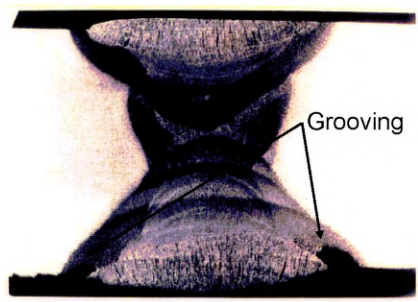

Photograph 2
Section of the grooving shown in Photograph 1

4.2 Deformations

4.2.1 Buckling of the bottom shell plating may occur between longitudinals or floors in areas subject to in-plane compressive stresses (either longitudinally or transversely). Deformations of bottom plating may also be attributed to dynamic force caused by wave slamming action at the forward part of the vessel, or contact with underwater objects. When deformation of the shell plating is found, the affected area should be inspected internally. Even if the deformation is small, the internal structure may have suffered serious damage.

4.3 Fractures

4.3.1 The bottom shell plating should be inspected when the hull has dried since fractures in shell plating can easily be detected by observing leakage of water from the cracks in clear contrast to the dry shell plating.

4.3.2 Fractures in butt welds and fillet welds, particularly at the wrap around at scallops and ends of bilge keel, are sometimes observed and may propagate into the bottom plating. The cause of fractures in butt welds is usually related to weld defect or grooving. If the bilge keels are divided at the block joints of hull, all ends of the bilge keels should be inspected.

5 General comments on repair

5.1 Material Wastage

5.1.1 Repair work in bilge hopper will require careful planning in terms of accessibility and gas freeing is required for repair work in cargo oil and fuel oil tanks.

5.1.2 Plating below suction heads and sounding pipes is to be replaced if the average thickness is below the acceptable limit. When scattered deep pitting is found, it may be repaired by welding.

5.2 Deformations

Extensively deformed bilge hopper and bottom plating should be replaced together with the deformed portion of girders, floors or transverse web frames. If there is no evidence that the deformation was caused by grounding or other excessive local loading, or that it is associated with excessive wastage, additional internal stiffening may need to be provided. In this regard, the Classification Society concerned should be contacted.

5.3 Fractures

5.3.1 Repair should be carried out in consideration of nature and extent of the fractures.

(a) Fractures of a minor nature may be veed-out and rewelded. Where cracking is more extensive, the structure is to be cropped and renewed.

(b) For fractures caused by the cyclic deflection of the double bottom, reinforcement of the structure may be required in addition to cropping and renewal of the fractured part.

(c) For fractures due to poor through thickness properties of the plating, cropping and renewal with steel having adequate through thickness properties is an acceptable solution.

5.3.2 The fractures in the knuckle connection between inner bottom plating and hopper sloping plating should be repaired as follows.

(a) Where the fracture is confined to the weld, the weld is to be veed-out and renewed using full penetration welding, with low hydrogen electrodes or equivalent.

(b) Where the fracture has extended into the plating of any tank boundary, then the fractured plating is to be cropped, and part renewed.

(c) Where the fracture is in the vicinity of the knuckle, the corner scallops in floors and transverses are to be omitted, or closed by welded collars. The sequence of welding is important, in this respect every effort should be made to avoid the creation of locked in stresses due to the welding process.

(d) Where the floor spacing is 2.0m or greater, brackets are to be arranged either in the vicinity of, or mid-length between, floors in way of the intersection. The brackets are to be attached to the adjacent inner bottom and hopper longitudinals. The thickness of the bracket is to be in accordance with the Rules of the Classification Society concerned.

5.3.3 Fractures in the connection between inner bottom plating/hopper sloping plating and stool should be repaired as follows.

(a) Fractures in way of section of the inner bottom and bulkhead stool in way of the double bottom girders can be veed out and welded. However, reinforcement of the structure may be required, e.g. by fitting additional double bottom girders on both sides affected girder or equivalent reinforcement. Scallops in the floors should be closed and air holes in the non-watertight girders re-positioned.

If the fractures are as a result of differences in the thickness of adjacent stool plate and the floor below the inner bottom, then it is advisable to crop and part renew the upper part of the floor with plating having the same thickness and mechanical properties as the adjacent stool plating.

If the fractures are as a result of misalignment between the stool plating and the double bottom floors, the structure should be released to rectifying the misalignment.

(b) Fractures in the inner bottom longitudinals and the bottom longitudinals in way of the intersection with watertight floors are to be cropped and partly renewed. In addition, brackets with soft toes are to be fitted in order to reduce the stress concentrations at the floors or stiffener.

(c) Fractures at the connection between the longitudinals and the vertical stiffeners or brackets are to be cropped and longitudinal part renewed if the fractures extend to over one third of the depth of the longitudinal. If fractures are not extensive these can be veed out and welded. In addition, reinforcement should be provided in the form of modification to existing bracket toes or the fitting of additional brackets with soft toes in order to reduce the stress concentration.

(d) Fractures at the corners of the transverse diaphragm/stiffeners are to be cropped and renewed. In addition, scallops are to be closed by overlap collar plates. To reduce the probability of such fractures recurring, consideration is to be given to one of the following reinforcements or modifications.
- The fitting of short intercostal girders in order to reduce the deflection at the problem area.

(e) Lamellar tearing may be eliminated through improving the type and quality of the weld, i.e. full penetration using low hydrogen electrodes and incorporating a suitable weld throat.

Alternatively the inner bottom plating adjacent to and in contact with the lower stool plating is substituted with plating of "Z" quality steel, which has good "through-thickness" properties.

5.3.4 Bilge keel should be repaired as follows:

(a) Fractures or distortion in bilge keels must be promptly repaired. Fractured butt welds should be repaired using full penetration welds and proper welding procedures. The bilge keel is subjected to the same level of longitudinal hull girder stress as the bilge plating, fractures in the bilge keel can propagate into the shell plating.

(b) Termination of bilge keel requires proper support by internal structure. This aspect should be taken into account when cropping and renewing damaged parts of a bilge keel.

Group 1 Bilge Hopper

OIL Tankers	Guidelines for Surveys, Assessment and Repair of Hull Structure	
Group 1	Cargo area	Example No.
	Hopper and double bottom ballast tank	1
Detail of damage	Fracture on the inner bottom plating at the connection of hopper plate to inner bottom	

Sketch of damage

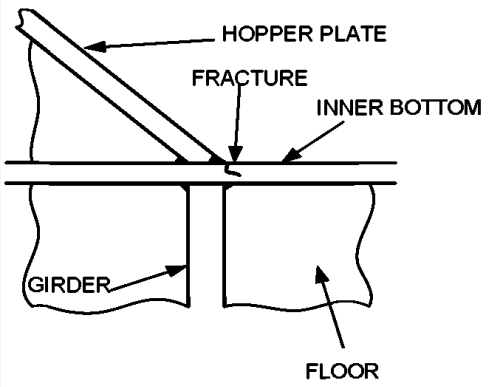

Sketch of repair

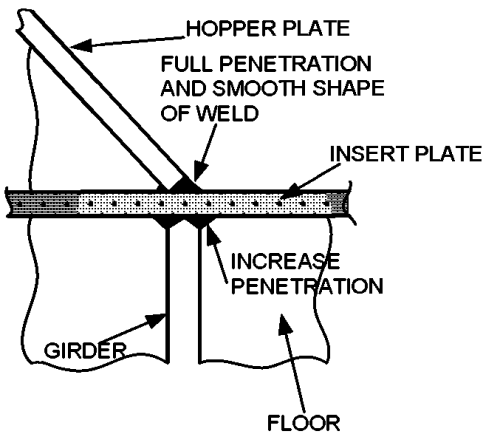

NEW CONSTRUCTION

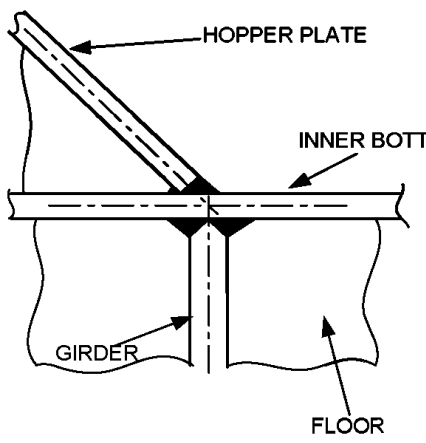

Notes: Plate midlines intersect

Factors which may have caused damage

1. Stress concentration at juncture of hopper plate to inner bottom.
2. Insufficient welding connection.
3. Misalignment between hopper plate, inner bottom and girder.

Notes on repairs

See Sketch.

OIL Tankers	Guidelines for Surveys, Assessment and Repair of Hull Structure	
Group 1	Cargo area	Example No.
	Hopper and double bottom ballast tank	2
Detail of damage	Fracture at connection of bilge hopper plate and inner bottom	

Sketch of damage

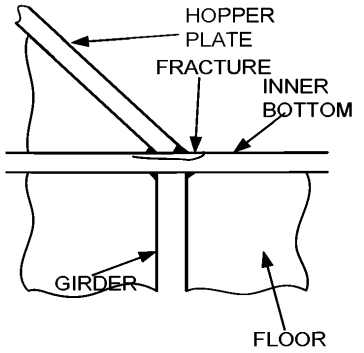

Sketch of repair

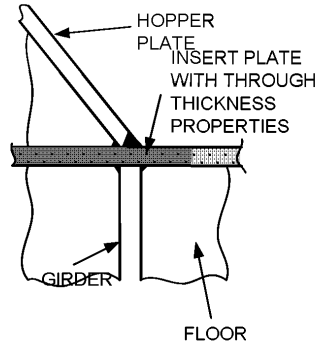

Notes: Plate midlines intersect

Factors which may have caused damage	**Notes on repairs**
1. Stress concentration at the knuckle.	See Sketch.

OIL Tankers	Guidelines for Surveys, Assessment and Repair of Hull Structure	
Group 1	Cargo area	Example No.
	Hopper and double bottom ballast tank	3
Detail of damage	Fracture at connection of bilge hopper plate and inner bottom	

Sketch of damage

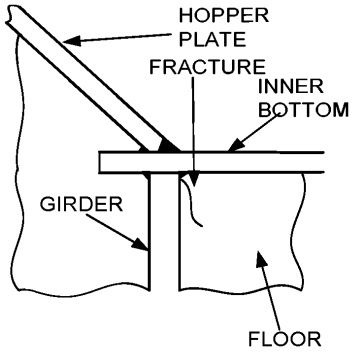

Sketch of repair

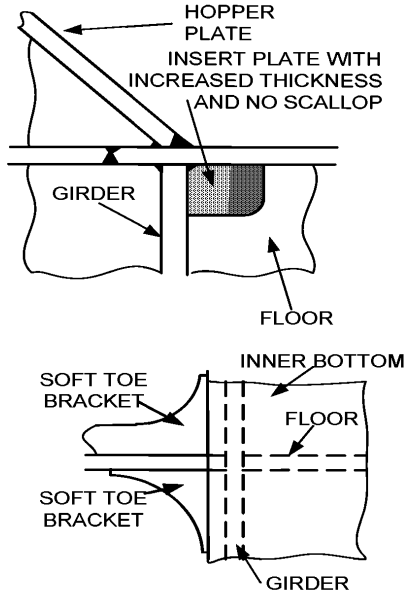

Notes: Plate midlines intersect

Factors which may have caused damage	Notes on repairs
1. Stress concentration at the knuckle.	See Sketch.

OIL Tankers	Guidelines for Surveys, Assessment and Repair of Hull Structure	
Group 1	Cargo area	Example No.
	Hopper and double bottom ballast tank	4
Detail of damage	Fracture at connection of bilge hopper plate and inner bottom	

Sketch of damage

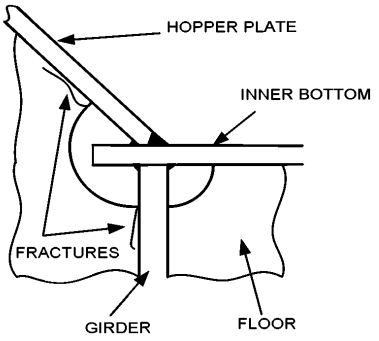

Sketch of repair

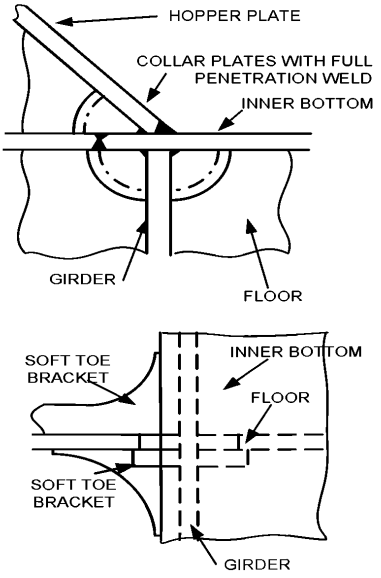

Notes: Plate midlines intersect

Factors which may have caused damage

1. Stress concentration at the knuckle.

Notes on repairs

See Sketch.

OIL Tankers	Guidelines for Surveys, Assessment and Repair of Hull Structure	
Group 1	Cargo area	Example No.
	Hopper and double bottom ballast tank	5
Detail of damage	Fractured floor and inner bottom plate in way of juncture of inner bottom to hopper plate	

Sketch of damage

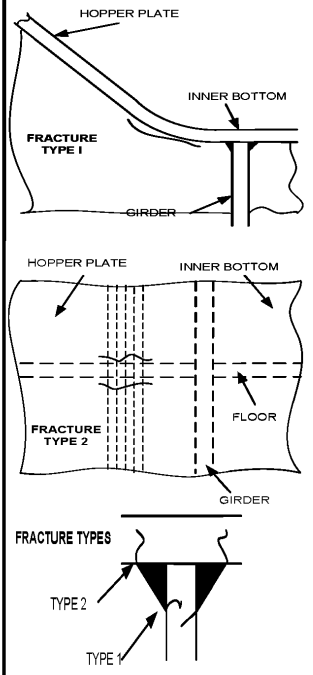

Sketch of repair

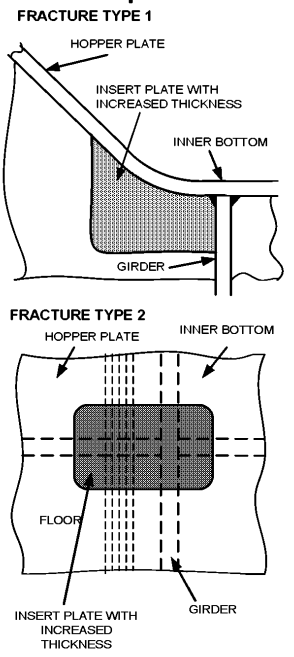

Factors which may have caused damage

1. Misalignment. The three mid-lines do not cross at the same joint. This misalignment produces an out-of-plane deformation of inner bottom plate in way of knuckle line.
2. Stress concentration at connection between floor and inner bottom plate.
3. Static and dynamic load of ballast water.

Notes on repairs

See Sketch.

OIL Tankers	Guidelines for Surveys, Assessment and Repair of Hull Structure	
Group 1	Cargo area	Example No.
	Hopper and double bottom ballast tank	6
Detail of damage	Fracture at connection of bilge hopper plate and web frame	

Sketch of damage

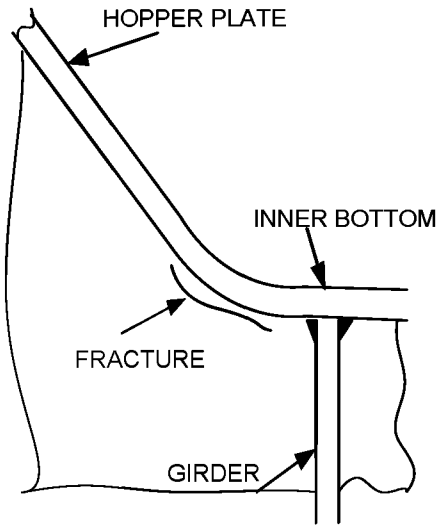

Sketch of repair

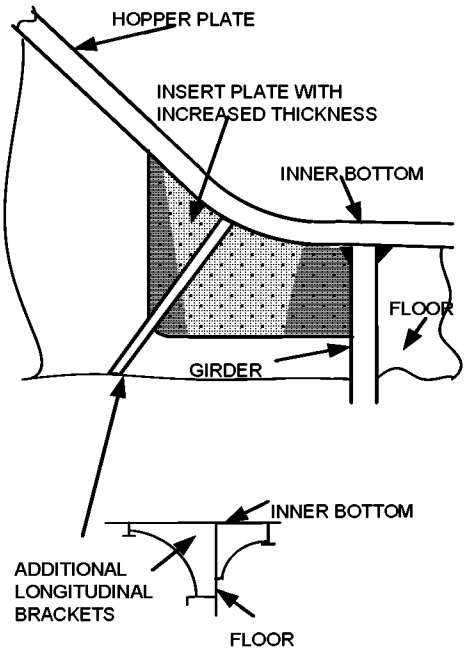

Factors which may have caused damage

1. Stress concentration due to reduction of effective flange area at curved plate.

Notes on repairs

See Sketch.

OIL Tankers	Guidelines for Surveys, Assessment and Repair of Hull Structure	
Group 1	Cargo area	Example No.
	Hopper and double bottom ballast tank	7
Detail of damage	Rounded hopper plate deformation in way of the floor	

Sketch of damage

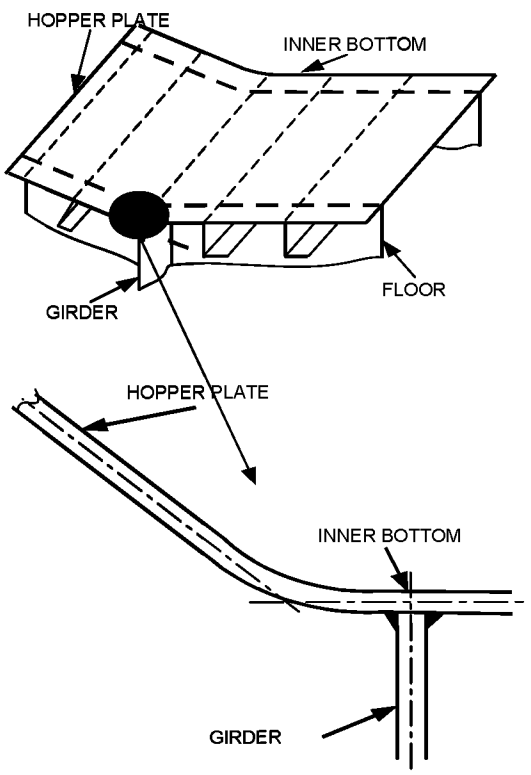

Sketch of repair

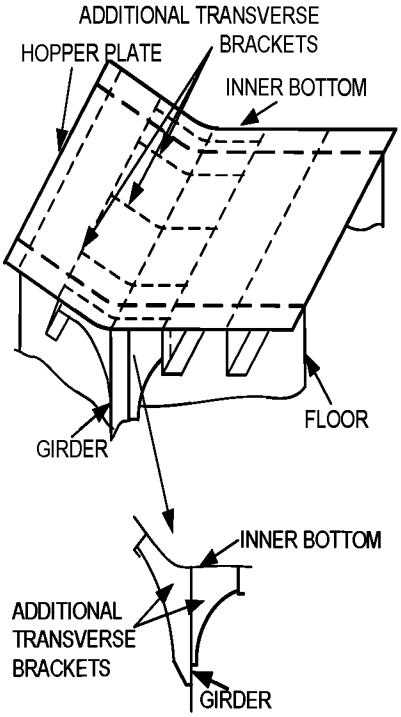

Factors which may have caused damage

1. Misalignment. The three midlines do not cross at the same joint. This misalignment produces an out-of-plane deformation in knuckled plate in the vicinity of floor.
2. Insufficient stiffening between floors.

Notes on repairs

See Sketch.

OIL Tankers	Guidelines for Surveys, Assessment and Repair of Hull Structure	
Group 1	Cargo area	Example No.
	Wing cargo tank	8
Detail of damage	Fracture at the connection of hopper plate to outside longitudinal bulkhead.	

Sketch of damage

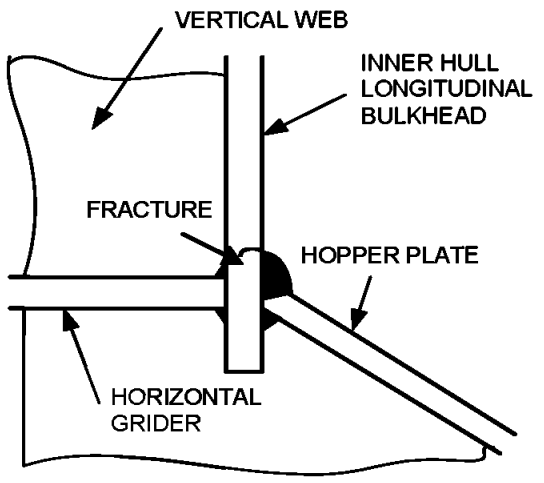

Sketch of repair

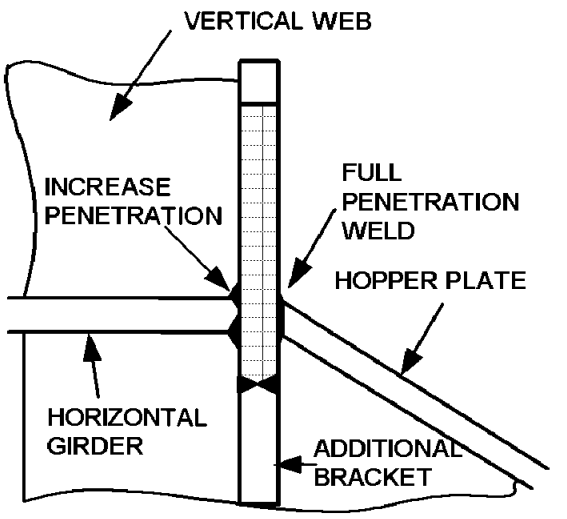

Factors which may have caused damage

1. Stress concentration at junction of hopper plate to outside longitudinal bulkhead.
2. Insufficient welding connection and/or incorrect shape of the weld toe.
3. Misalignment between hopper plate, outside longitudinal bulkhead and side stringer.

Notes on repairs

See Sketch.

OIL Tankers	Guidelines for Surveys, Assessment and Repair of Hull Structure	
Group 1	Cargo area	Example No.
	Hopper and double bottom ballast tank	9
Detail of damage	Fracture in gusset plate in line with inner bottom	

Sketch of damage

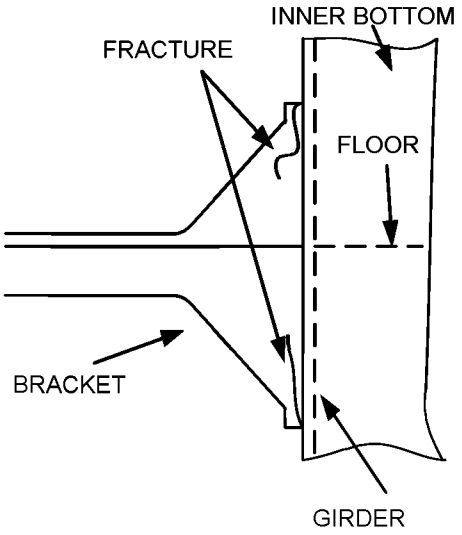

Sketch of repair

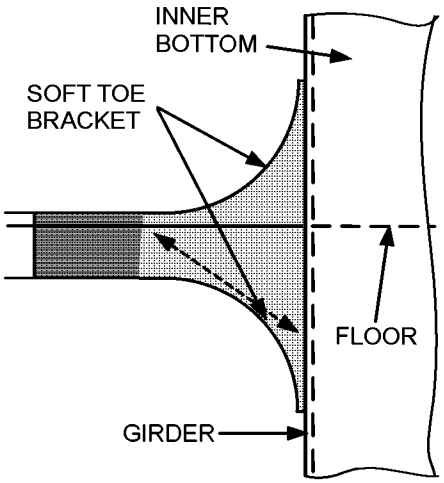

Notes: Bracket radii as large as practicable.
Bracket same thickness as inner bottom stiffener.
Toe height should be small as possible while still allowing return weld (wrapped weld).

Factors which may have caused damage

1. Stress concentration due to small radius and abrupt toe.
2. Insufficient welding.
3. Insufficient sectional area (thickness x breadth) of the connecting bracket.

Notes on repairs

See Sketch.

OIL Tankers	Guidelines for Surveys, Assessment and Repair of Hull Structure	
Group 1	Cargo area	Example No.
	Hopper ballast tank	10
Detail of damage	Fracture in way of cut-out in hopper plate	

Sketch of damage

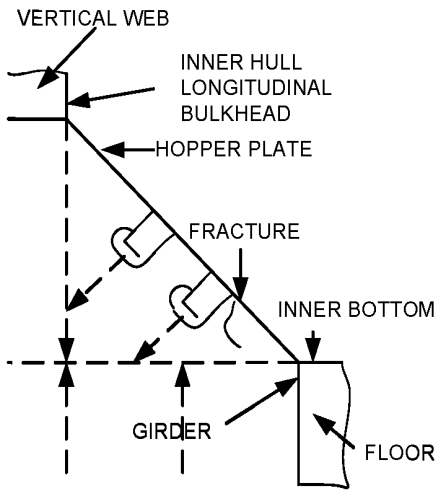

Sketch of repair

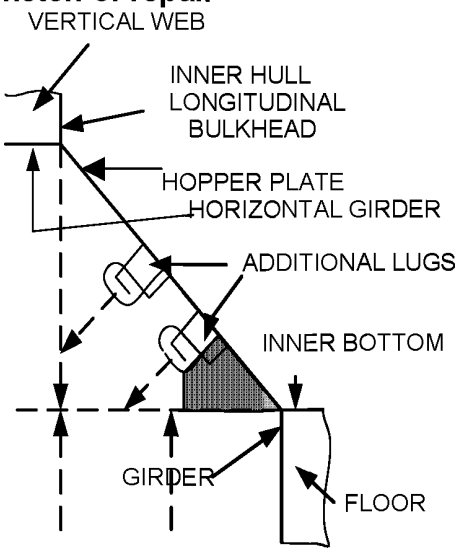

Factors which may have caused damage

1. Stress concentration due to no collar plate.

Notes on repairs

See Sketch.

Group 2 Wing Ballast Tank

Contents

1 General

2 What to look for
2.1 Material wastage
2.2 Deformations
2.3 Fractures

3 General comments on repair
3.1 Material wastage
3.2 Deformations
3.3 Fractures

Examples of structural detail failures and repairs – Group 2

Example No.	Title
1	Crack in way of connection of longitudinals to transverse bulkhead
2	Crack in way of connection of longitudinals to transverse webs
3	Fracture in way of web and flat bar stiffener at cut outs for longitudinal stiffener connections
4	Fracture in way of web and flat bar stiffener at cut outs for longitudinal stiffener connections as Example 3 but with faceplate attached to underside of web. Flat bar lap welded.
5	Buckling in way of side web panels above hopper horizontal girder
6	Panels of side horizontal girders in way of transverse bulkhead
7	Fracture at connection of horizontal stringers to transverse web frames and horizontal girders

1 General

1.1 Wing Ballast tanks are highly susceptible to corrosion and wastage of the internal structure. This is a potential problem for all double hull tankers, particularly for ageing ships and others where the coatings have broken down. Coatings, if applied and properly maintained, serve as an indication as to whether the structure remains in satisfactory condition and highlights any structural defects.

In some ships wing ballast tanks are protected by sacrificial anodes in addition to coatings. This system is not effective for the upper parts of the tanks since the system requires the structure to be fully immersed in seawater, and the tanks may not be completely filled during ballast voyages.

1.2 Termination of longitudinals in the fore and aft regions of the ship, in particular at the collision and engine room bulkheads, is prone to fracture due to high stress concentration if the termination detail is not properly designed.

2 What to look for

2.1 Material wastage

2.1.1 The combined effect of the marine environment, high humidity atmosphere as well as adjacent heated cargo tanks within wing ballast tank will give rise to a high corrosion rate.

2.1.2 Rate and extent of corrosion depends on the environmental conditions, and protective measures employed, such as coatings and sacrificial anodes. The following structures are generally susceptible to corrosion.

(a) Structure in corrosive environment:
- Deck plating and deck longitudinal
- Transverse bulkhead adjacent to heated fuel oil tank

(b) Structure subject to high stress:
- Connection of side longitudinal to transverse

(c) Areas susceptible to coating breakdown:
- Back side of faceplate of longitudinal
- Welded joint
- Edge of access opening

(d) Areas subjected to poor drainage:
- Web plating of side and sloping longitudinals

2.2 Deformations

2.2.1 Deformation of structure may be caused by contact (with quay side, ice, touching underwater objects, lightering service, etc.), collision, and high stress. Attention should be paid to the following areas during survey:

(a) Structure subjected to high stress
(b) Structure in way of tug/pier/fender contact

2.3 Fractures

2.3.1 Attention should be paid to the following areas during survey for fracture damage:

(a) Areas subjected to stress concentration
- Welded joints of faceplate of transverse at corners
- Connection of the lowest longitudinal to transverse web frame, especially with reduced scantlings.
- Termination of longitudinal in fore and aft wing tanks

(b) Areas subjected to dynamic wave loading
- Connection of side longitudinal to watertight bulkhead
- Connection of side longitudinal to transverse web frame

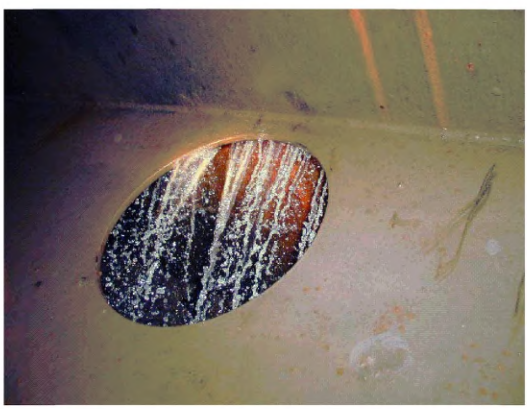

Photograph 1 Side shell fracture in way of horizontal stringer weld

2.3.2 The termination of the following structural members at the collision bulkhead prone to fracture damage due to discontinuity of the structure:
- Fore peak tank top plating (Boatswain's store deck plating)

In order to avoid stress concentration due to discontinuity appropriate stiffeners are to be provided in the opposite space. If such stiffeners are not provided, or are deficient due to corrosion or misalignment, fractures may occur at the terminations.

3 General comments on repair

3.1 Material wastage

3.1.1 If the corrosion is caused by high stress concentration, renewal with original thickness is not sufficient to avoid reoccurrence. Renewal with increased thickness and/or appropriate reinforcement should be considered in conjunction with appropriate corrosion protective measures.

3.2 Deformations

3.2.1 Any damage affecting classification should be reported to the classification society. If the deformation is considered to be related to inadequate structural strength, appropriate reinforcement should be carried out. Where the deformation is related to corrosion, appropriate corrosion prevention measures should be considered. Where the deformation is related to mechanical damages the structure is to be repaired as original.

3.3 Fractures

3.3.1 If the cause of the fracture is fatigue under the action of cyclic wave loading, consideration should be given to the improvement of structural detail design, such as provision of soft toe bracket, to reduce stress concentration. If the fatigue fracture is vibration related, the damage is usually associated with moderate stress levels at high cycle rate, improvement of structural detail may not be effective. In this case, avoidance of resonance, such as providing additional stiffening, may be considered.

Where fracture occurs due to material under excessive stress, indicating inadequate structural strength, renewal with thicker plate and/or providing appropriate reinforcement should be considered.

Group 2 Wing Ballast Tank

OIL Tankers	Guidelines for Surveys, Assessment and Repair of Hull Structure	
Group 2	Cargo area	Example No.
	Wing ballast tank	1
Detail of damage	Crack in way of connection of longitudinals to transverse bulkhead	

Sketch of damage

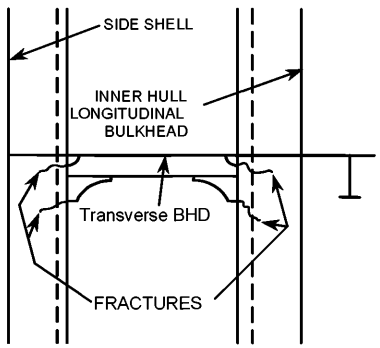

Sketch of repair

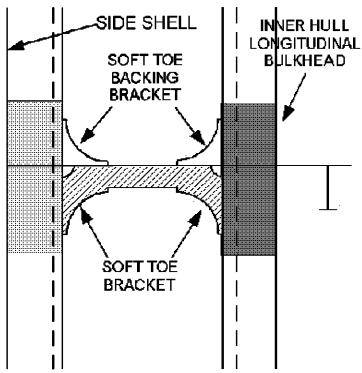

Factors which may have caused damage

1. Asymmetrical connection of bracket without backing bracket.
2. Relative deflection of adjoining transverse web against transverse bulkhead.
3. Additional biaxial bending stresses due to asymmetry of the angle bar longitudinal instead of symmetric T section.
4. Dynamic load in the vicinity of the water line.
5. Large upstand at bracket toe.

Notes on repairs

See Sketch.

OIL Tankers	Guidelines for Surveys, Assessment and Repair of Hull Structure	
Group 2	Cargo area	Example No.
	Wing ballast tank	2
Detail of damage	Crack in way of connection of longitudinals to transverse webs	

Sketch of damage

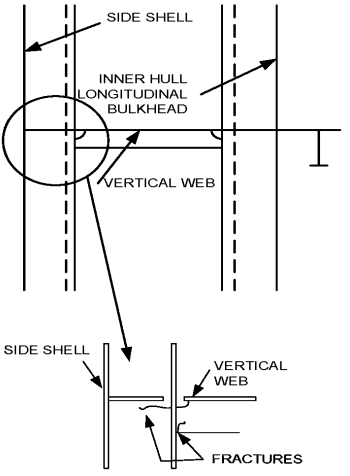

Sketch of repair

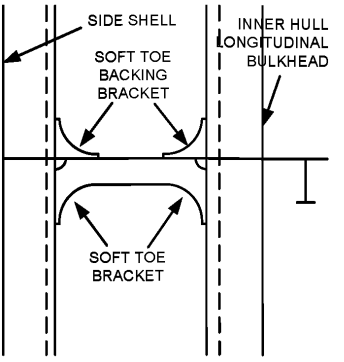

Factors which may have caused damage

1. Asymmetrical connection of flat bar stiffener resulting in high peak stresses at the heel of the stiffener.
2. Insufficient area of connection of longitudinal to web.
3. High bending stresses in the longitudinal.
4. Additional biaxial bending stresses due to asymmetry of the longitudinal (angle bar instead of symmetric T bar).
5. Stress concentration at the square angles at heel and toe of the connections.
6. High shear stress in the transverse web.

Notes on repairs

See Sketch.

OIL Tankers	Guidelines for Surveys, Assessment and Repair of Hull Structure	
Group 2	Cargo area	Example No.
	Wing ballast tank	3
Detail of damage	Fracture in way of web and flat bar stiffener at cut outs for longitudinal stiffener connections.	

Sketch of damage

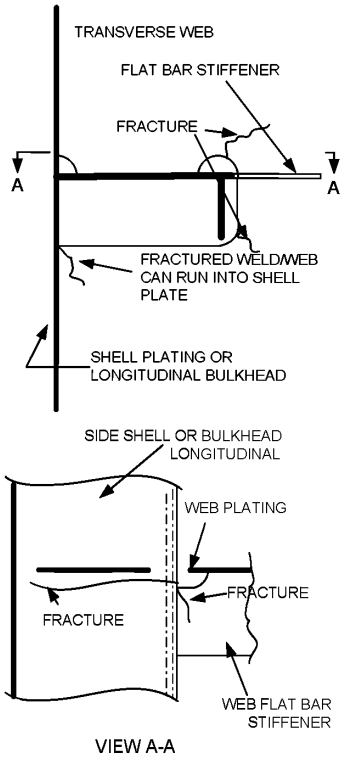

VIEW A-A

Sketch of repair

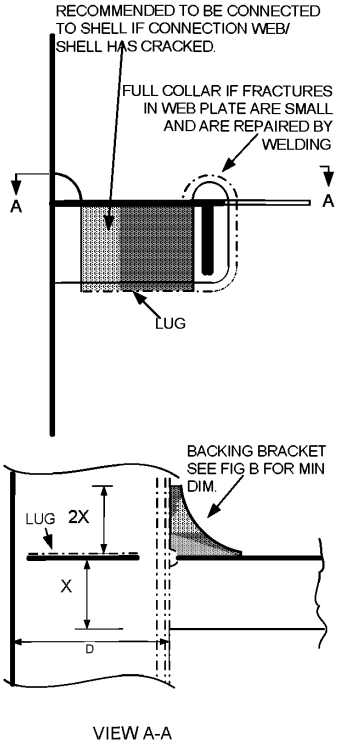

VIEW A-A

Insert longitudinal.

Factors which may have caused damage

1. Asymmetrical connection of flat bar stiffener resulting in high peak stress at heel of the stiffener under fatigue loading.
2. Insufficient area of connection of longitudinal to web plate.
3. Defective weld at return around the plate thickness.
4. High localized corrosion at areas of stress concentrations such as flat bar stiffener connections, corners of cut out for longitudinal and connection of web to shell at cut outs.
5. High shear stress in web of the transverse.
6. Dynamic seaway loads/motions.

Notes on repairs

See Sketch.

May also fit a double bracket to avoid fracture from toe.

OIL Tankers	Guidelines for Surveys, Assessment and Repair of Hull Structure	
Group 2	Cargo area	Example No.
	Wing ballast tank	4
Detail of damage	Fracture in way of web and flat bar stiffener at cut outs for longitudinal stiffener connections as Example 3 but with faceplate attached to underside of web. Flat bar lap welded.	

Sketch of damage

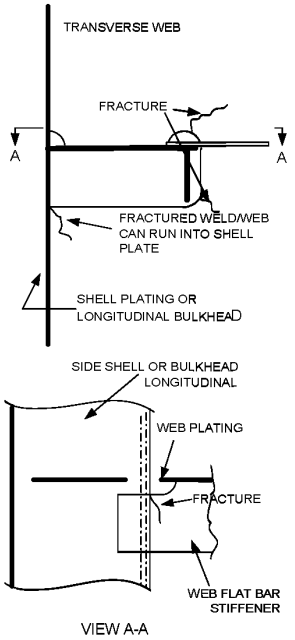

Sketch of repair

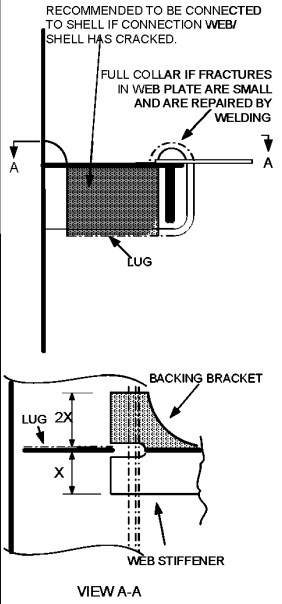

Insert web plate.

Factors which may have caused damage

1. Asymmetrical connection of flat bar stiffener resulting in high peak stress at heel of the stiffener under fatigue loading.
2. Fabricated longitudinal with welding onto exposed edge of the web resulting in poor fatigue strength of the connection of the longitudinal to the flat bar.
3. Insufficient area of connection of longitudinal to web plate.
4. Defective weld at return around the plate thickness.
5. High localized corrosion at areas of stress concentrations such as flat bar stiffener connections, corners of cut out for longitudinal and connection of lug to shell at cut outs.
6. High shear stress in web of the transverse.
7. Dynamic seaway loads/motions.

Notes on repairs

See Sketch.

1. May also fit a double bracket to avoid fracture from toe.

OIL Tankers	Guidelines for Surveys, Assessment and Repair of Hull Structure	
Group 2	Cargo area	Example No.
	Wing ballast tank	5
Detail of damage	Buckling in way of side web panels above hopper horizontal girder	

Sketch of damage

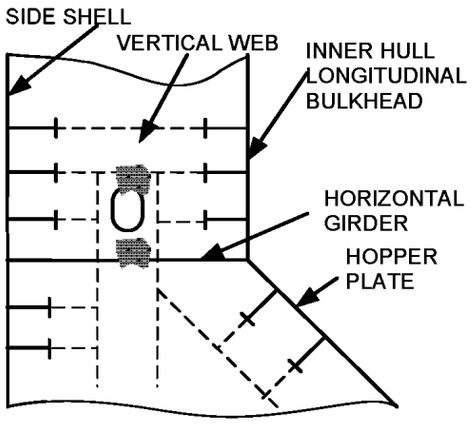

Sketch of repair

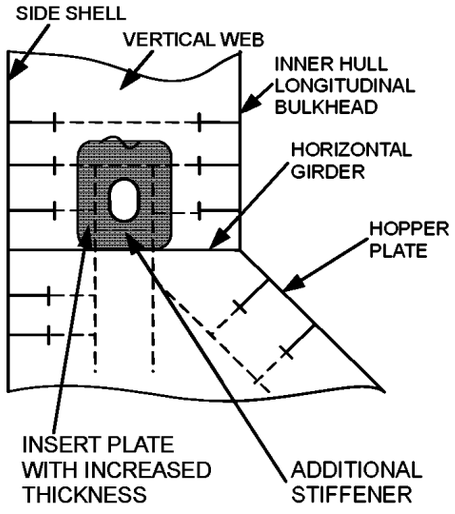

Factors which may have caused damage

1. High shear stress in the transverse web.
2. Insufficient buckling strength.

Notes on repairs

See Sketch.

OIL Tankers	Guidelines for Surveys, Assessment and Repair of Hull Structure	
Group 2	Cargo area	Example No.
	Wing ballast tank	6
Detail of damage	Panels of side horizontal girders in way of transverse bulkhead	

Sketch of damage

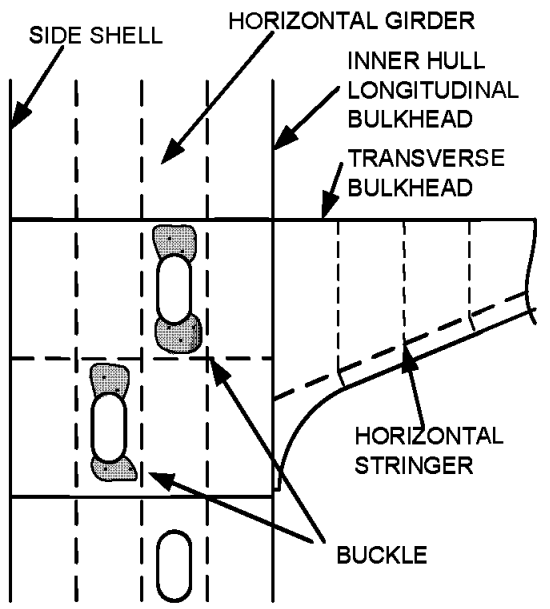

Sketch of repair

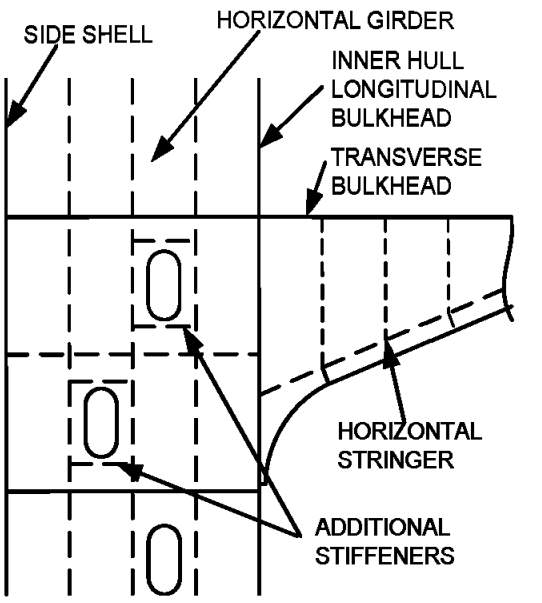

Factors which may have caused damage

1. High shear or compressive stress in the stringer.
2. Insufficient buckling strength.

Notes on repairs

See Sketch.

OIL Tankers	Guidelines for Surveys, Assessment and Repair of Hull Structure	
Group 2	Cargo area	Example No.
	Wing ballast tank	7
Detail of damage	Fracture at connection of horizontal stringers to transverse web frames and horizontal girders	

Sketch of damage

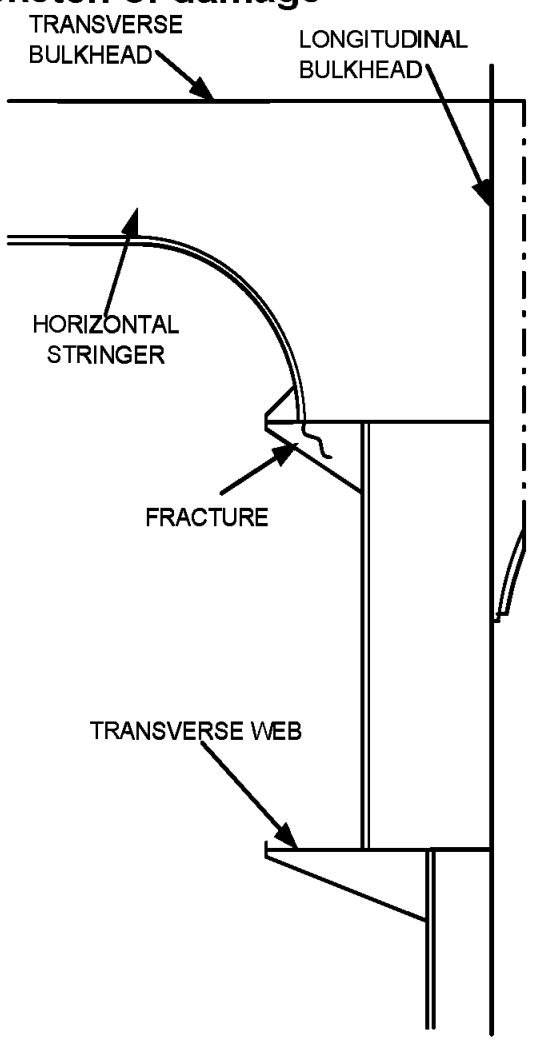

Sketch of repair

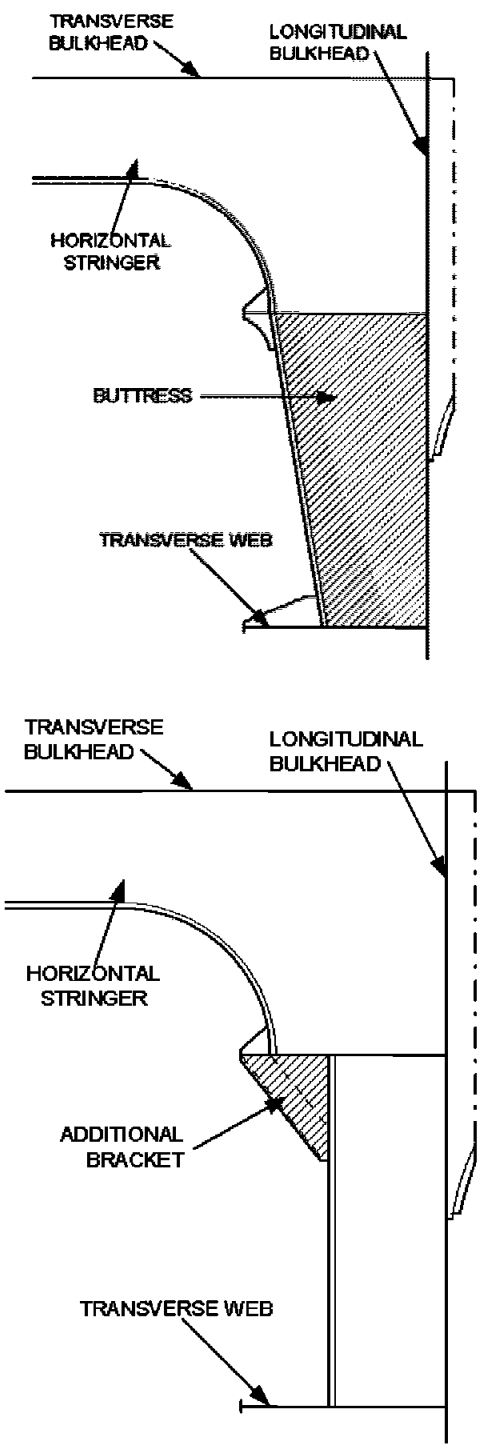

Factors which may have caused damage

1. Stress concentration due to discontinuous structure.
2. High shear stress in the horizontal stringer.

Notes on repairs

See Sketch.

Group 3 Bottom Ballast Tank

Contents

1 General

2 What to look for - Tank Top survey
2.1 Material wastage
2.2 Deformations
2.3 Fractures

3 What to look for - Double Bottom survey
3.1 Material wastage
3.2 Deformations
3.3 Fractures

4 What to look for - External Bottom survey
4.1 Material wastage
4.2 Deformations
4.3 Fractures

5 General comments on repair
5.1 Material wastage
5.2 Deformations
5.3 Fractures

Examples of structural detail failures and repairs – Group 3

Example No.	Title
1	Cracks in way of longitudinals connected to watertight floors
2	Fracture in way of stiffeners at connection of inner bottom and bottom shell to transverse bulkhead and floors
3	Connection of longitudinals to ordinary floors
4	Connection of longitudinals to ordinary floors
5	Panels of bottom girders in way of openings
6	Cut-outs on floors
7	Fractured stiffener connection to bottom and inner bottom longitudinals

1 General

1.1 In addition to contributing to the longitudinal bending strength of the hull girder, the double bottom structure provides support for the cargo in the tanks. The bottom shell at the forward part of the ship may sustain increased dynamic forces caused by slamming in heavy weather.

2 What to look for - Tank Top survey

2.1 Material wastage

2.1.1 The general corrosion condition of the tank top structure may be observed by visual survey. The level of wastage of tank top plating may have to be established by means of thickness measurement. Special attention should be paid to areas where pipes, e.g. cargo piping, heating coils, etc are fitted close to the tank top plating, making proper maintenance of the protective coating difficult to carry out.

2.1.2 Grooving corrosion is often found in or beside welds, especially in the heat affected zone. The corrosion is caused by the galvanic current generated from the difference of the metallographic structure between the heat affected zone and base metal. Coating of the welds is generally less effective compared to other areas due to roughness of the surface, which exacerbates the corrosion. Grooving corrosion may lead to stress concentrations and further accelerate the corrosion process. Grooving corrosion may be found in the base material where coating has been scratched or the metal itself has been mechanically damaged.

2.1.3 On uncoated areas or where the coating has broken down, pitting corrosion may occur in the tank top plating within cargo tanks. If not properly maintained, this may lead to cargo leakage into the double bottom ballast spaces.

2.2 Deformations

2.2.1 Buckling of the tank top plating may occur between longitudinals in areas subject to in-plane transverse compressive stresses or between floors in areas subject to in-plane longitudinal compressive stresses.

2.2.2 Whenever deformations are observed on the tank top, further survey in the double bottom tanks is imperative in order to determine the extent of the damage. The deformation may cause the breakdown of coating within the double bottom, which in turn may lead to accelerated corrosion rate in these unprotected areas.

2.3 Fractures

2.3.1 Fractures will normally be found by close-up survey. Fractures that extend through the thickness of the plating or through the welds may be observed during pressure testing of the double bottom tanks.

3 What to look for - Double Bottom survey

3.1 Material wastage

3.1.1 The level of wastage of double bottom internal structure (longitudinals, transverses, floors, girders, etc.) may have to be established by means of thickness measurements. Rate and extent of corrosion depends on the corrosive environment, and protective measures employed, such as coatings and sacrificial anodes. The following structures are generally susceptible to corrosion (also see **3.1.2** - **3.1.4**).

(a) Structure in corrosive environment:
- Transverse bulkhead and girder adjacent to heated fuel oil tank.
- Under side of inner bottom plating and attached longitudinals if the cargo tank above is heated.

(b) Structure subject to high stress
- Face plates and web plates of transverse at corners

c) Areas susceptible to coating breakdown
- Back side of faceplate of longitudinal
- Welded joint
- Edge of access opening

3.1.2 If the protective coating is not properly maintained, structure in the ballast tank may suffer severe localised corrosion. In general, structure at the upper part of the double bottom tank usually has more severe corrosion than that at the lower part.

3.1.3 The high temperature due to heated cargoes may accelerate corrosion of ballast tank structure near these heated tanks. The rate of corrosion depends on several factors such as:
- Temperature and heat input to the ballast tank.
- Condition of original coating and its maintenance.
- Ballasting frequency and operations.
- Age of ship and associated stress levels as corrosion reduces the thickness of the structural elements and can result in fracturing and buckling.

3.1.4 Shell plating below suction head often suffers localized wear caused by erosion and cavitation of the fluid flowing through the suction head. In addition, the suction head will be positioned in the lowest part of the tank and water/mud will cover the area even when the tank is empty. The condition of the shell plating may be established by feeling by hand beneath the suction head. When in doubt, the lower part of the suction head should be removed and thickness measurements taken. If the vessel is docked, the thickness can be measured from below. If the distance between the suction head and the underlying shell plating is too small to permit access, the suction head should be dismantled. The shell plating below the sounding pipe should also be carefully examined. When a striking plate has not been fitted or is worn out, heavy corrosion can be caused by the striking of the weight of the sounding tape.

3.2 Deformations

3.2.1 Where deformations are identified during tank top survey (See **2.2**) and external bottom survey (See **4.2**), the deformed areas should be subjected to internal survey to determine the extent of the damage to the coating and internal structure.

Deformations in the structure not only reduce the structural strength but may also cause breakdown of the coating, leading to accelerated corrosion.

3.3 Fractures

3.3.1 Fractures will normally be found by close-up survey.

(a) Fractures in the inner bottom longitudinals and the bottom longitudinals in way of the intersection with the watertight floors below the transverse bulkhead stools.

(b) Lamellar tearing of the inner bottom plate below the weld connection with the stool in the cargo oil tank caused by large bending stresses in the connection when in heavy ballast condition. The size of stool and lack of full penetration welds could also be a contributory factor, as well as poor "through-thickness" properties of the tank top plating.

3.3.2 Transition region

In general, the termination of the following structural members at the collision bulkhead and engine room forward bulkhead may be prone to fractures:

- Hopper tank sloping plating
- Panting stringer in fore peak tank
- Inner bottom plating in engine room

In order to avoid stress concentration due to discontinuity appropriate stiffeners are to be provided in the opposite space. If such stiffeners are not provided, or are deficient due to corrosion or misalignment, fractures may occur at the terminations.

4 What to look for - External Bottom survey

4.1 Material wastage

4.1.1 Hull structure below the water line can usually be surveyed only when the ship is dry-docked. The opportunity should be taken to inspect the external plating thoroughly. The level of wastage of the bottom plating may have to be established by means of thickness measurements.

4.1.2 Severe grooving along welding of bottom plating is often found (See also **Photographs 1** and **2 in Group 1**). This grooving can be accelerated by poor maintenance of the protective coating and/or sacrificial anodes fitted to the bottom plating.

4.1.3 Bottom or "docking" plugs should be carefully examined for excessive corrosion along the edge of the weld connecting the plug to the bottom plating.

4.2 Deformations

4.2.1 Buckling of the bottom shell plating may occur between longitudinals or floors in areas subject to in-plane compressive stresses (either longitudinally or transversely). Deformations of bottom plating may also be attributed to dynamic force caused by wave slamming action at the forward part of the vessel, or contact with underwater objects. When deformation of the shell plating is found, the affected area should be surveyed internally. Even if the deformation is small, the internal structure may have suffered serious damage.

4.3 Fractures

4.3.1 The bottom shell plating should be surveyed when the hull has dried since fractures in shell plating can easily be detected by observing leakage of water from the cracks in clear contrast to the dry shell plating.

4.3.2 Fractures in butt welds and fillet welds, particularly at the wrap around at scallops and ends of bilge keel, are sometimes observed and may propagate into the bottom plating. The cause of fractures in butt welds is usually related to weld defect or grooving. If the bilge keels are divided at the block joints of hull, all ends of the bilge keels should be surveyed.

5 General comments on repair

5.1 Material wastage

5.1.1 Repair work in double bottom will require careful planning in terms of accessibility and gas freeing is required for repair work in cargo oil tanks.

5.1.2 Plating below suction heads and sounding pipes is to be replaced if the average thickness is below the acceptable limit. When scattered deep pitting is found, it may be repaired by welding.

5.2 Deformations

Extensively deformed tank top and bottom plating should be replaced together with the deformed portion of girders, floors or transverse web frames. If there is no evidence that the deformation was caused by grounding or other excessive local loading, or that it is associated with excessive wastage, additional internal stiffening may need to be provided. In this regard, the Classification Society concerned should be contacted.

5.3 Fractures

5.3.1 Repair should be carried out in consideration of nature and extent of the fractures.

(a) Fractures of a minor nature may be veed-out and rewelded. Where cracking is more extensive, the structure is to be cropped and renewed.

(b) For fractures caused by the cyclic deflection of the double bottom, reinforcement of the structure may be required in addition to cropping and renewal of the fractured part.

(c) For fractures due to poor through thickness properties of the plating, cropping and renewal with steel having adequate through thickness properties is an acceptable solution.

Group 3 Bottom Ballast Tank

OIL Tankers	Guidelines for Surveys, Assessment and Repair of Hull Structure	
Group 3	Cargo area	Example No.
	Bottom ballast tank	1
Detail of damage	Cracks in way of longitudinals connected to watertight floors	

Sketch of damage

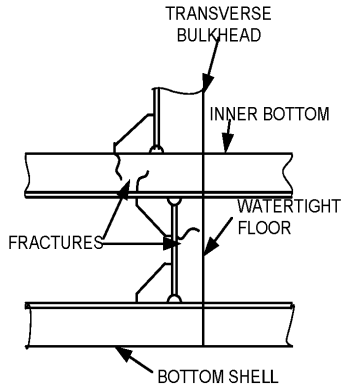

Sketch of repair

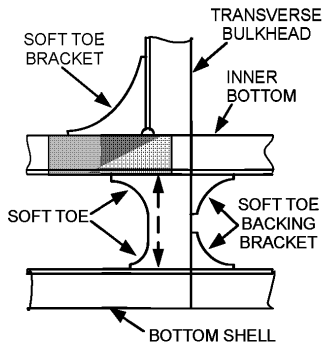

Factors which may have caused damage

1. Asymmetrical connection of bracket in association with a backing bracket, which is too small.
2. Relative deflection between adjacent floor and transverse bulkhead.
3. Inadequate shape of the brackets.
4. High stresses in the inner bottom longitudinal and the floor stiffener.

Notes on repairs

See Sketch.

OIL Tankers	Guidelines for Surveys, Assessment and Repair of Hull Structure	
Group 3	Cargo area	Example No.
	Bottom ballast tank	2
Detail of damage	Fracture in way of stiffeners at connection of inner bottom and bottom shell to transverse bulkhead and floors.	

Sketch of damage

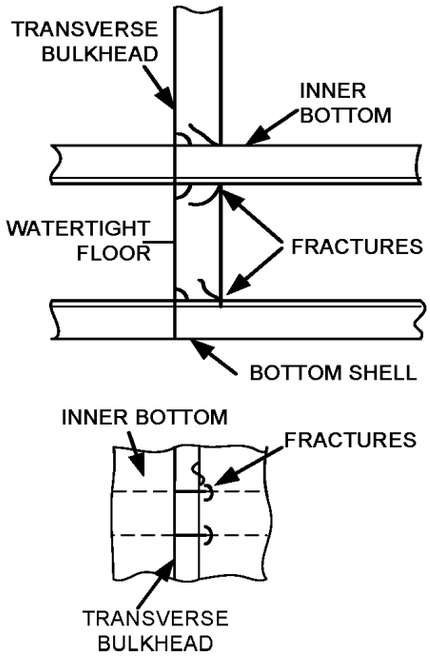

Sketch of repair

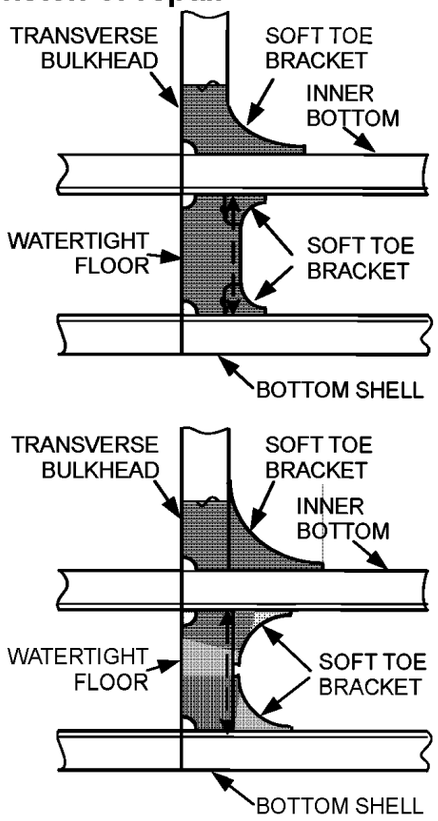

Factors which may have caused damage

1. Misalignment between bulkhead stiffener and inner bottom longitudinal.
2. High stress concentration.

Notes on repairs

See Sketch.

1. If tank top plating is fractured, part crop and insert.
2. Proper alignment between bulkhead stiffener and inner bottom longitudinal is critical for successful repair.
3. Soft backing brackets may also be added.

OIL Tankers	Guidelines for Surveys, Assessment and Repair of Hull Structure	
Group 3	Cargo area	Example No.
	Bottom ballast tank	3
Detail of damage	Connection of longitudinals to ordinary floors.	

Sketch of damage

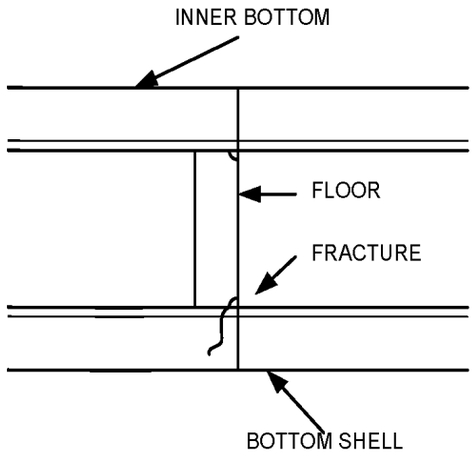

Sketch of repair

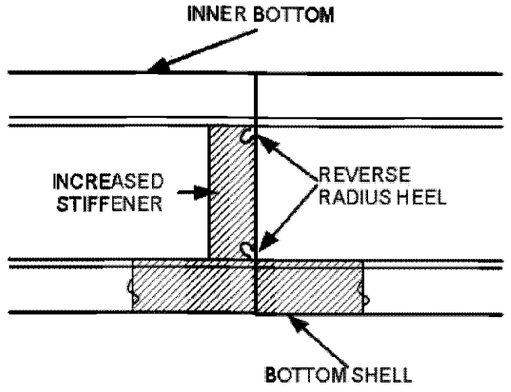

DETAIL OF REVERSE RADIUS HEEL

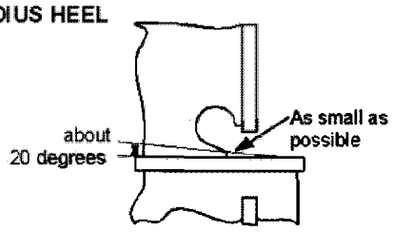

or

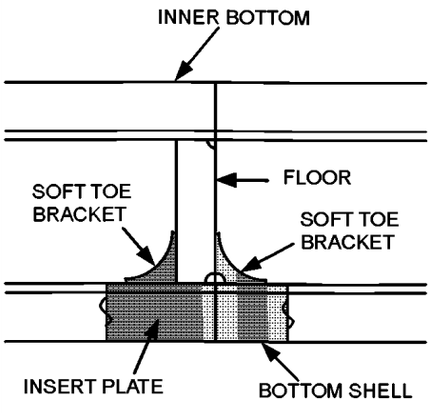

Factors which may have caused damage

1. Asymmetrical connection.
2. Relative deflection of adjacent floor to transverse bulkhead.

Notes on repairs

See Sketch.

OIL Tankers	Guidelines for Surveys, Assessment and Repair of Hull Structure	
Group 3	Cargo area	Example No.
	Bottom ballast tank	4
Detail of damage	Connection of longitudinals to ordinary floors	

Sketch of damage

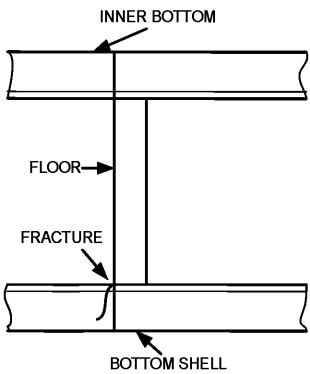

Sketch of repair

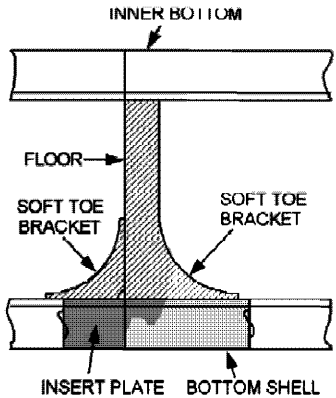

Factors which may have caused damage

1. Stress concentration at the connection of bottom longitudinal and stiffener on floor.

Notes on repairs

See Sketch.

1. Butt welds in bottom longitudinal should be kept clear of the soft toe bracket toes.
2. If possible soft toe bracket and vertical stiffener should be integral.

OIL Tankers	Guidelines for Surveys, Assessment and Repair of Hull Structure	
Group 3	Cargo area	Example No.
	Bottom ballast tank	5
Detail of damage	Panels of bottom girders in way of openings.	

Sketch of damage

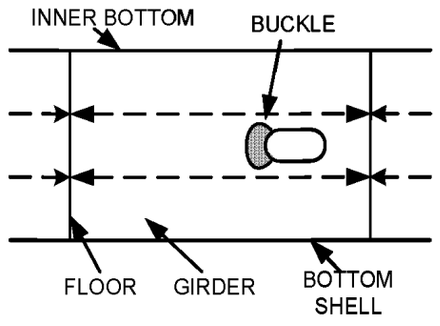

Sketch of repair

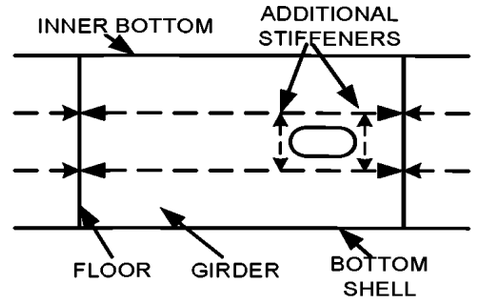

Factors which may have caused damage

1. High shear or compressive stress in the side girder.
2. Insufficient buckling strength.

Notes on repairs

See Sketch.

OIL Tankers	Guidelines for Surveys, Assessment and Repair of Hull Structure	
Group 3	Cargo area	Example No.
	Bottom ballast tank	6
Detail of damage	Cut-outs on floors	

Sketch of damage

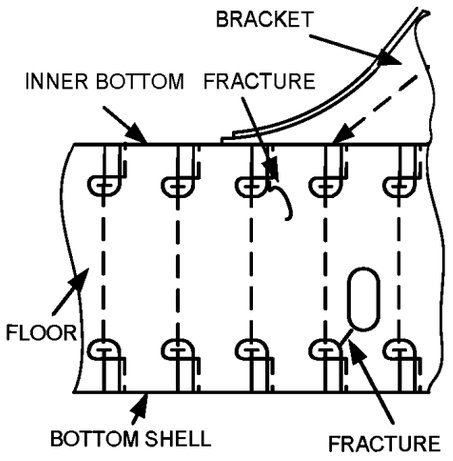

Sketch of repair

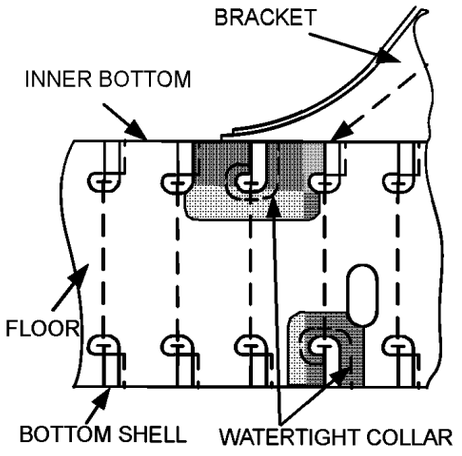

Above for relatively small fractures.

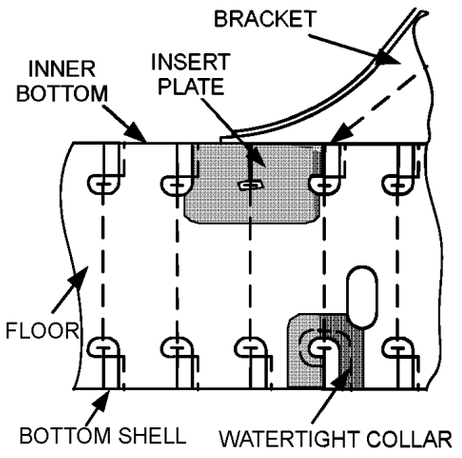

Above method for larger fractures.

Factors which may have caused damage

1. High stress in the vicinity of the transverse web frame bracket toe.
2. Lack of material between manhole and cut-out for bottom longitudinals.

Notes on repairs

1. Top sketch: Gouge and reweld fractures then fit WT collars.
2. Bottom sketch: As an alternative to rewelding and fitting collar, crop and insert.

OIL Tankers	Guidelines for Surveys, Assessment and Repair of Hull Structure	
Group 3	Cargo area	Example No.
	Bottom ballast tank	7
Detail of damage	Fractured stiffener connection to bottom and inner bottom longitudinals.	

Sketch of damage

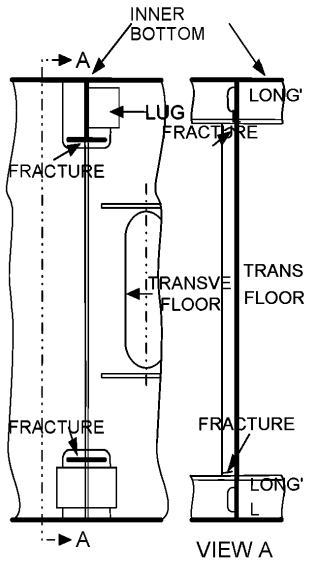

Sketch of repair

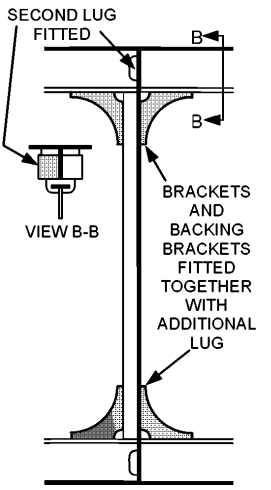

Factors which may have caused damage

1. Asymmetric connection leading to high local stresses at the connection of vertical stiffeners of the transverse floors to the inner and outer bottom longitudinals.
2. Wide slot for longitudinal leads to inefficient lug connection.
3. Sharp corners or flame-cut edges producing a notch effect.
4. Incomplete/defective weld at stiffener connection to the longitudinals.
5. Dynamic sea way loads/ship motions.

Notes on repairs

See Sketch.

Group 4 Web Frames in Cargo Tanks

Contents

1 General

2 What to look for – Web Frame survey
2.1 Material wastage
2.2 Deformations
2.3 Fractures

3 General comments on repair
3.1 Material wastage
3.2 Deformations
3.3 Fractures

Examples of structural detail failures and repairs – Group 4

Example No.	Title
1	Fracture at toe of web frame bracket connection to inner bottom
2	Cross ties and their end connections
3	Buckled transverse web plates in way of cross tie
4	Cut-outs around transverse bracket end
5	Fracture in way of connection of transverse web tripping brackets to longitudinal
6	Tripping brackets modification of the bracket toe

1 General

1.1 The web frame is the support for the transfer of the loads from the longitudinals. This structure has critical points at the intersections of the longitudinals, openings for access through the web frames and critical intersections such as found at the hopper knuckles as well as any bracket terminations. See also Figures 3 and 4 in **Chapter 1 Introduction**.

1.2 Depending upon the design or size of tanker web frames include deck transverse, vertical webs on longitudinal bulkheads and cross ties.

2 What to look for - Web Frame survey

2.1 Material wastage

2.1.1 The general condition with regard to wastage of the web frames may be observed by visual survey during the overall and close up surveys.

Attention is drawn to the fact that web frames may be significantly weakened by loss of thickness although diminution and deformations may not be apparent. Survey should be made after the removal of any scale, oil or rust deposit. Where the corrosion is smooth and uniform the diminution may not be apparent and thickness measurements would be necessary, to determine the condition of the structure.

2.1.2 Pitting corrosion may be found under coating blisters, which need to be removed before inspection. Pitting may also occur on horizontal structures, in way of sediments and in way of impingement from tank cleaning machines.

2.2 Deformations

2.2.1 Deformations may occur in web frames in way of excessive corrosion especially in way of openings in the structure. However, where deformation resulting from bending or shear buckling has occurred with a small diminution in thickness, this could be due to overloading and this aspect should be investigated before proceeding with repairs.

2.3 Fractures

2.3.1 Fractures may occur in way of discontinuities in the faceplates and at bracket terminations as well as in way of openings in structure. Fractures may also occur in way of cut outs for longitudinals.

3 General comments on repair

3.1 Material wastage

3.1.1 When the reduction in thickness of plating and stiffeners has reached the diminution levels permitted by the Classification Society involved, the wasted plating and stiffeners are to be cropped and renewed.

3.2 Deformations

3.2.1 Depending on the extent of the deformation, the structure should be restored to its original shape and position either by fairing in place and if necessary fitting additional panel stiffeners and/or by cropping and renewing the affected structure.

3.3 Fractures

3.3.1 Because of the interdependence of structural components it is important that all fractures and other significant damage to the frames and their brackets, however localised, are repaired.

3.3.2 Repair of fractures at the boundary of a cargo tanks to ballast tanks should be carefully considered, taking into account necessary structural modification, enhanced scantlings and material, to prevent recurrence of the fractures.

Group 4 Web Frames in Cargo Tanks

OIL Tankers	Guidelines for Surveys, Assessment and Repair of Hull Structure	
Group 4	Cargo area	Example No.
	Web Frame in cargo tank	1
Detail of damage	Fracture at toe of web frame bracket connection to inner bottom.	

Sketch of damage

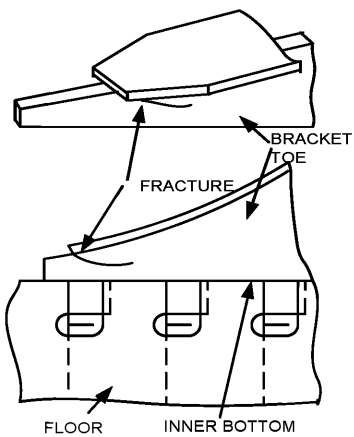

Sketch of repair

Modify Face Taper

1. Breadth taper 20 degrees.
2. Breadth at toe as small as practical.
3. Thickness taper 1 in 3 to 10mm.

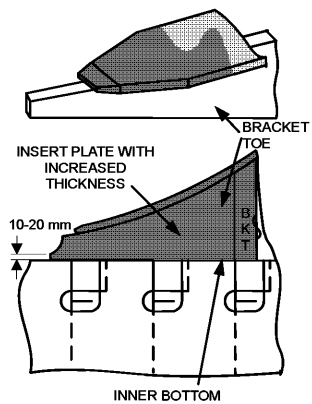

Factors which may have caused damage

1. Inadequate tapering the toe end.
2. Insufficient tapering of flange.
3. Lateral flexing of the bracket.

Notes on repairs

See Sketch.

OIL Tankers	Guidelines for Surveys, Assessment and Repair of Hull Structure	
Group 4	Cargo area	Example No.
	Web Frame in cargo tank	2
Detail of damage	Cross ties and their end connections	

Sketch of damage

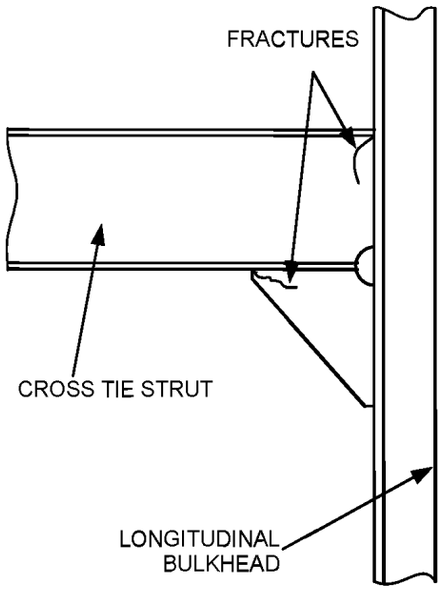

Sketch of repair

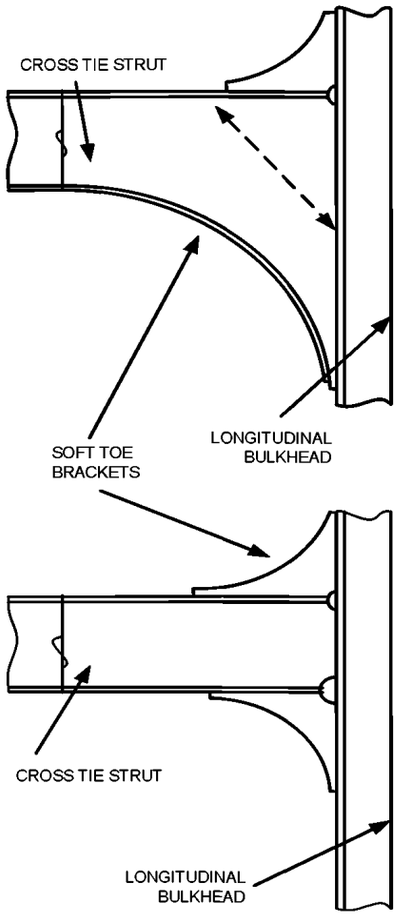

Factors which may have caused damage

1. Stress concentration due to unsuitable bracket shape at juncture of cross tie to longitudinal.
2. Inadequate panel stiffening of web plate of cross-tie.

Notes on repairs

See Sketch.

OIL Tankers	Guidelines for Surveys, Assessment and Repair of Hull Structure	
Group 4	Cargo area	Example No.
	Web Frame in cargo tank	3
Detail of damage	Buckled transverse web plates in way of cross tie.	

Sketch of damage

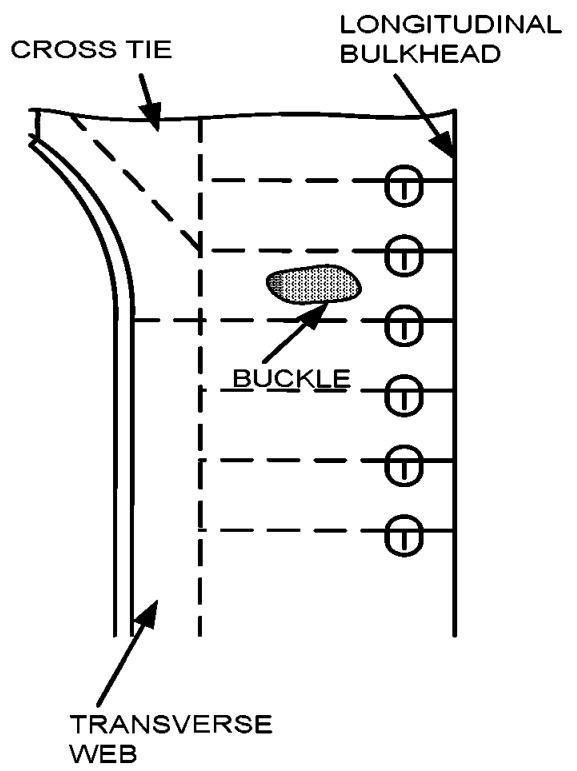

Sketch of repair

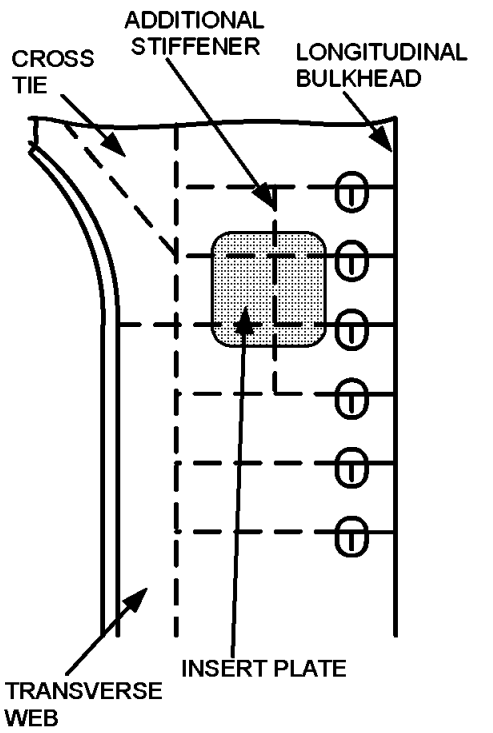

Factors which may have caused damage

1. Insufficient panel stiffening on transverse web.

Notes on repairs

See Sketch.

1. Depending upon size of deformation, additional stiffeners may be sufficient.

OIL Tankers	Guidelines for Surveys, Assessment and Repair of Hull Structure	
Group 4	Cargo area	Example No.
	Web Frame in cargo tank	4
Detail of damage	Cut-outs around transverse bracket end.	

Sketch of damage

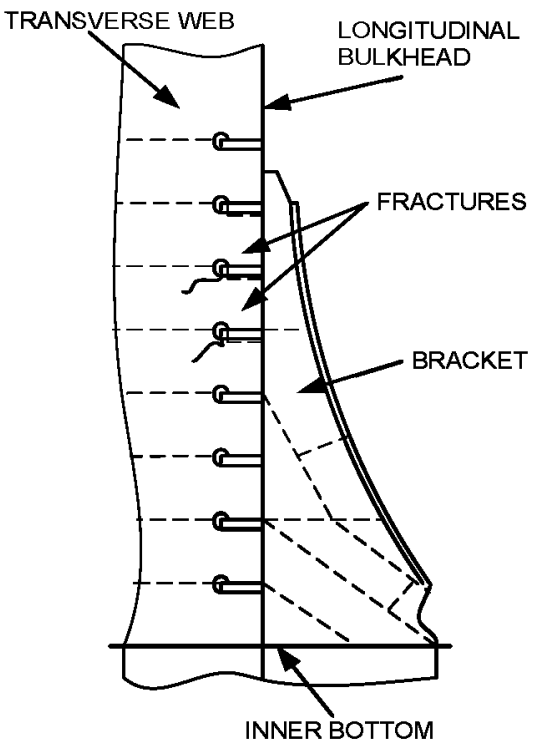

Sketch of repair

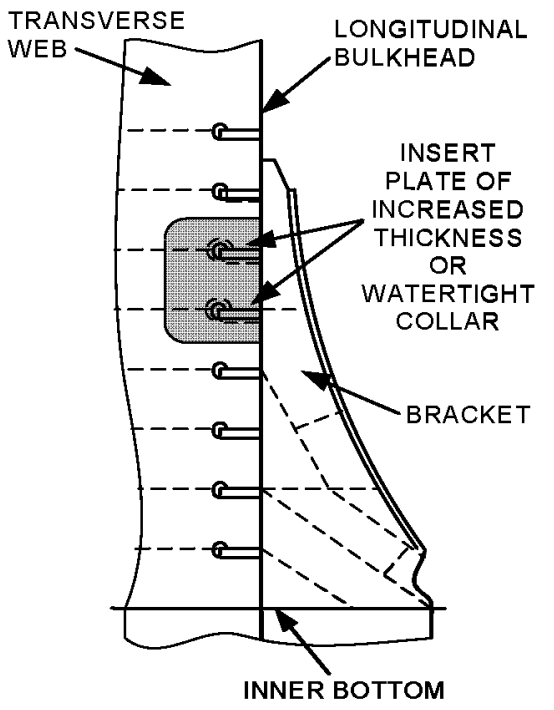

Factors which may have caused damage

1. High stresses at toe of bottom transverse end bracket.
2. Sharp corner at cut-out.

Notes on repairs

See Sketch.

OIL Tankers	Guidelines for Surveys, Assessment and Repair of Hull Structure	
Group 4	Cargo area	Example No.
	Web Frame in cargo tank	5
Detail of damage	Fracture in way of connection of transverse web tripping brackets to longitudinal	

Sketch of damage

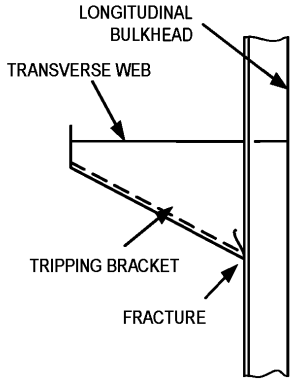

Sketch of repair

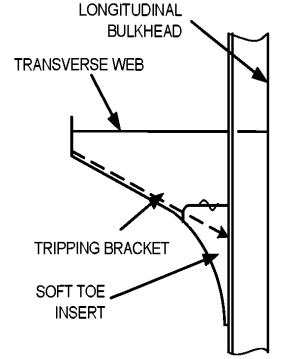

Factors which may have caused damage

1. Hard spot at the toe of bracket.
2. Vibration.

Notes on repairs

See Sketch.

1. Soft bracket may be added on upper side of web, to avoid fracture at the heel.

OIL Tankers	Guidelines for Surveys, Assessment and Repair of Hull Structure	
Group 4	Cargo area	Example No.
	Web Frame in cargo tank	6
Detail of damage	Tripping brackets modification of the bracket toe.	

Sketch of damage

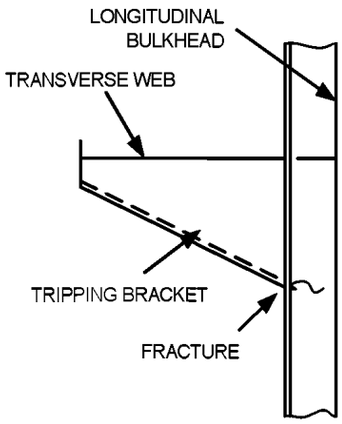

Sketch of repair

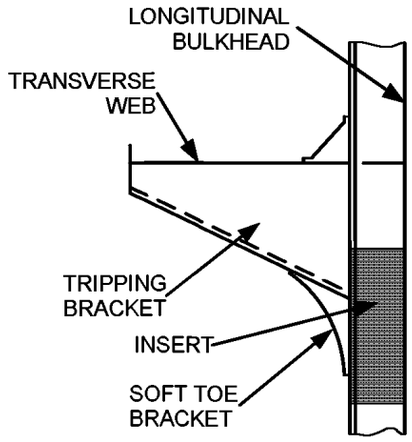

Factors which may have caused damage

1. Stress concentrations at toe of bracket.
2. High stress in longitudinal.

Notes on repairs

See Sketch.

1. Soft bracket may be added on upper side of web, to avoid fracture at the heel.

Group 5 Transverse Bulkheads in Cargo Tanks

Contents

1 General

2 What to look for - Bulkhead survey
- 2.1 Material wastage
- 2.2 Deformations
- 2.3 Fractures

3 What to look for - Stool survey
- 3.1 Material wastage
- 3.2 Deformations
- 3.3 Fractures

4 General comments on repair
- 4.1 Material wastage
- 4.2 Deformations
- 4.3 Fractures

Examples of structural detail failures and repairs – Group 5

Example No.	Title
1	Fracture in way of connection of transverse bulkhead stringer to transverse web frames and longitudinal bulkhead stringer
2	Horizontal stringer in way of longitudinal BHD cracked
3	Connection of longitudinals to horizontal stringers
4	Fractured inner bottom plate at the connection to access trunk wall
5	Bulkhead vertical web to deck and inner bottom
6	Vertically corrugated bulkhead without stool, connection to deck and inner bottom
7	Fracture at connection of vertically corrugated transverse bulkhead with stool to shelf plate and lower stool plate
8	Fracture at connection of lower stool plate to inner bottom tank. Lower stool plate connected to vertically corrugated transverse bulkhead
9	Fracture at connection of transverse bulkhead to knuckle inner bottom/girder

1 General

1.1 The transverse bulkheads at the ends of cargo tanks are oiltight bulkheads serving two main functions:
(a) As main transverse strength elements in the structural design of the ship.
(b) They are essentially deep tank bulkheads, which, in addition to the functions given in (a) above, are designed to withstand the head pressure of the full tank.

1.2 The bulkheads may be constructed as vertically corrugated with a lower stool, and with or without an upper stool. Alternatively plane bulkhead plating with one sided vertical stiffeners and horizontal stringers.

1.3 Heavy corrosion may lead to collapse of the structure under extreme load, if it is not rectified properly.

1.4 It is emphasised that appropriate access arrangement as indicated in **Chapter 4 Survey Programme, Preparation and Execution** of the guidelines should be provided to enable a proper close-up survey and thickness measurement as necessary.

2 What to look for – Bulkhead survey

2.1 Material wastage

2.1.1 Excessive corrosion may be found in the following locations:
(a) Bulkhead plating adjacent to the longitudinal bulkhead plating.
(b) Bulkhead plating and weld connections to the lower/upper stool shelf plates and inner bottom.

2.1.2 If coatings have broken down and there is evidence of corrosion, it is recommended that random thickness measurements be taken to establish the level of diminution.

2.1.3 When the periodical survey requires thickness measurements, or when the Surveyor deems necessary, it is important that the extent of the gauging be sufficient to determine the general condition of the structure.

2.2 Deformations

2.2.1 When the bulkhead has sustained serious uniform corrosion, the bulkhead may suffer shear buckling. Evidence of buckling may be indicated by the peeling of paint or rust. However, where deformation resulting from bending or shear buckling has occurred

on a bulkhead with a small diminution in thickness, this could be due to overloading and this aspect should be investigated before proceeding with repairs.

2.3 Fractures

2.3.1 Fractures usually occur at the boundaries of corrugations and bulkhead stools particularly in way of shelf plates, deck, inner bottom, etc.

3 What to look for – Stool survey

3.1 Material wastage

3.1.1 Excessive corrosion may be found on diaphragms, particularly at their upper and lower weld connections.

3.2 Fractures

3.2.1 Fractures observed at the connection between lower stool and corrugated bulkhead during stool survey may have initiated at the weld connection of the inside diaphragms (See **Example 7**).

3.2.2 Misalignment between bulkhead corrugation flange and sloping stool plating may also cause fractures at the weld connection of the inside diaphragms.

4 General comments on repair

4.1 Material wastage

4.1.1 When the reduction in thickness of plating and stiffeners has reached the diminution levels permitted by the Classification Society involved, the wasted plating and stiffeners are to be cropped and renewed.

4.2 Deformations

4.2.1 If the deformation is local and of a limited extent, it could generally be faired out. Deformed plating in association with a generalized reduction in thickness should be partly or completely renewed.

4.3 Fractures

4.3.1 Fractures that occur at the boundary weld connections as a result of latent weld defects should be veed-out, appropriately prepared and re-welded preferably using low hydrogen electrodes or equivalent.

4.3.2 For fractures other than those described in **4.3.1**, re-welding may not be a permanent solution and an attempt should be made to improve the design and construction in order to avoid a recurrence. Typical examples of such cases are as follows:

(a) Fractures in the weld connections of the stool plating to the shelf plate in way of the scallops in the stool's internal structure. The scallops should be closed by fitting lapped collar plates and the stool weld connections repaired as indicated in **4.3.1**. The lapped collar plates should have a full penetration weld connection to the stool and shelf plate and should be completed using low hydrogen electrodes prior to welding the collar to the stool diaphragm/bracket.

(b) Fractures in the weld connections of the corrugations and/or stool plate to the shelf plate resulting from misalignment of the stool plate and the flange of the corrugation (Similarly misalignment of the stool plate with the double bottom floor).

It is recommended that the structure be cut free, the misalignment rectified, and the stool, floor and corrugation weld connection appropriately repaired as indicated in **4.3.1**. Other remedies to such damages include fitting of brackets in the stool in line with the webs of the corrugations. In such cases both the webs of the corrugations and the brackets underneath are to have full penetration welds and the brackets are to be arranged without scallops. However, in many cases this may prove difficult to attain.

(c) Fractures in the weld connections of the corrugations to the hopper tank.

It is recommended that the weld connection be repaired as indicated in **4.3.1** and, where possible, additional stiffening be fitted inside the tanks to align with the flanges of the corrugations.

Group 5 Transverse Bulkheads in Cargo Tanks

OIL Tankers	Guidelines for Surveys, Assessment and Repair of Hull Structure	
Group 5	Cargo area	Example No.
	Transverse Bulkhead in cargo tank	1
Detail of damage	Fracture in way of connection of transverse bulkhead stringer to transverse web frames and longitudinal bulkhead stringer	

Sketch of damage

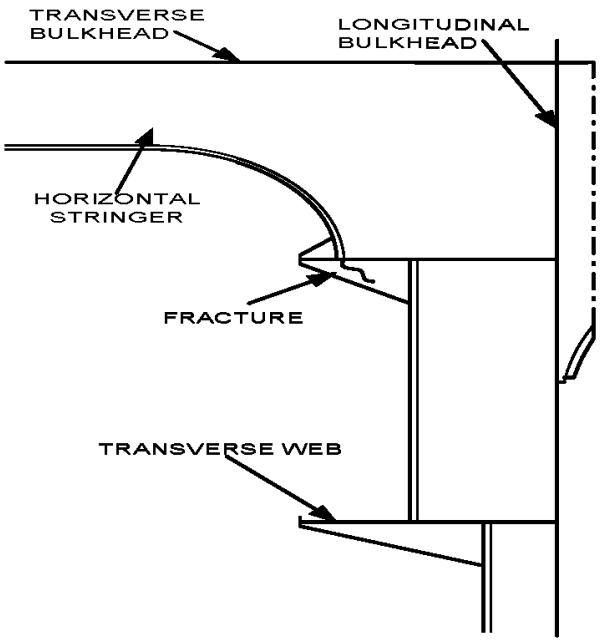

Sketch of repair

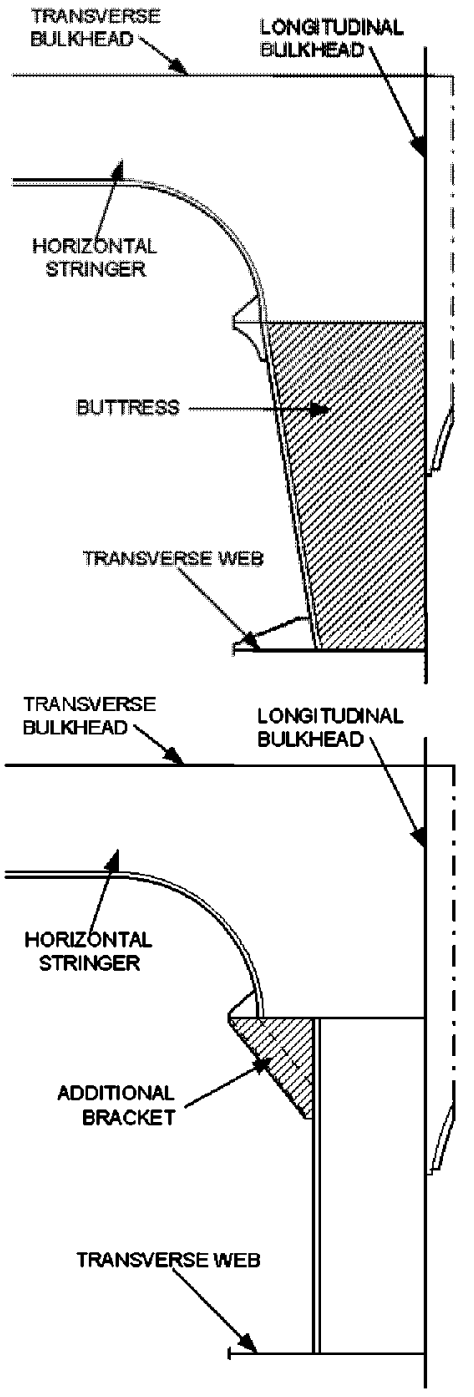

Factors which may have caused damage

1. Stress concentration due to discontinuous structure.
2. High shear stress in the horizontal stringer.

Notes on repairs

See Sketch.

OIL Tankers	Guidelines for Surveys, Assessment and Repair of Hull Structure	
Group 5	Cargo area	Example No.
	Transverse Bulkhead in cargo tank	2
Detail of damage	Horizontal stringer in way of longitudinal BHD cracked	

Sketch of damage

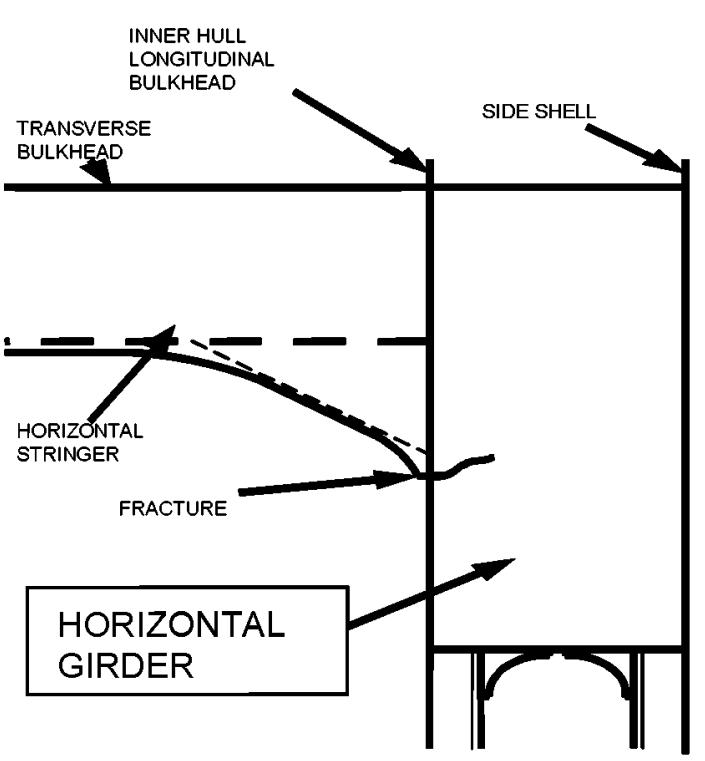

Sketch of repair

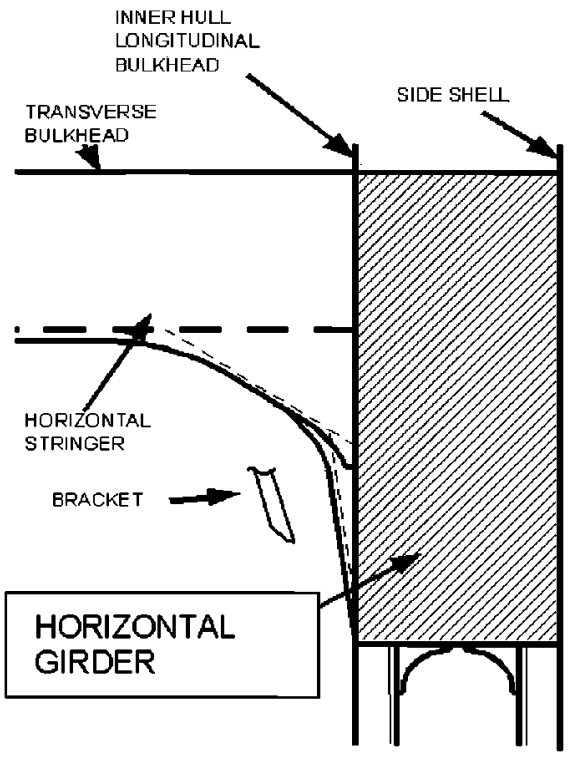

Factors which may have caused damage	Notes on repairs
1. Misalignment between bracket end and side girder in wing tank.	See Sketch.

OIL Tankers	Guidelines for Surveys, Assessment and Repair of Hull Structure	
Group 5	Cargo area	Example No.
	Transverse Bulkhead in cargo tank	3
Detail of damage	Connection of longitudinals to horizontal stringers.	

Sketch of damage

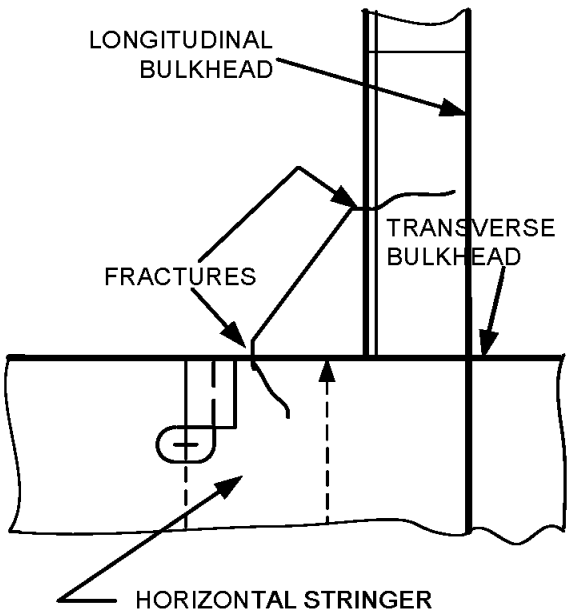

Sketch of repair

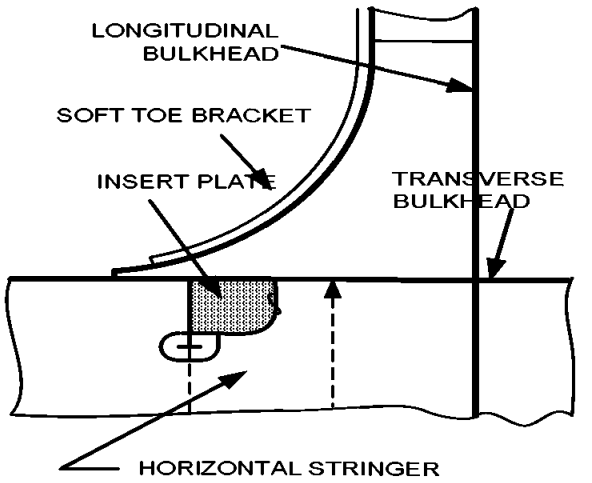

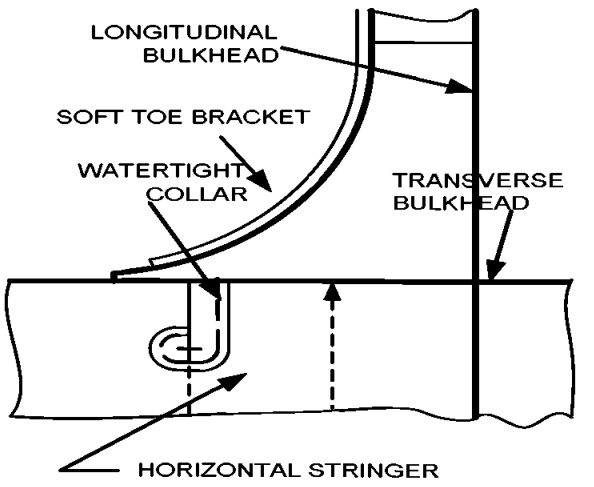

Factors which may have caused damage

1. Stress concentration due to inadequate shape of the bracket.
2. Relative deflection of adjoining transverse web against transverse bulkhead.

Notes on repairs

See Sketch

OIL Tankers	Guidelines for Surveys, Assessment and Repair of Hull Structure	
Group 5	Cargo area	Example No.
	Transverse Bulkhead in cargo tank	4
Detail of damage	Fractured inner bottom plate at the connection to access trunk wall	

Sketch of damage

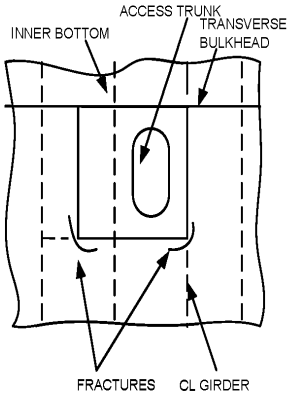

Sketch of repair

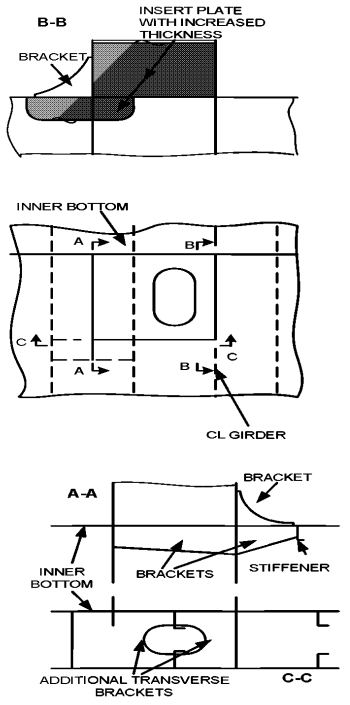

Factors which may have caused damage

1. Stress concentration at the connection of trunk wall to inner bottom plate.
2. Relative deformation between horizontal stringer fitted on transverse bulkhead and inner bottom plate.
3. Static and dynamic load of cargo liquid.

Notes on repairs

See Sketch.

OIL Tankers	Guidelines for Surveys, Assessment and Repair of Hull Structure	
Group 5	Cargo area	Example No.
	Transverse Bulkhead in cargo tank	5
Detail of damage	Bulkhead vertical web to deck and inner bottom	

Sketch of damage

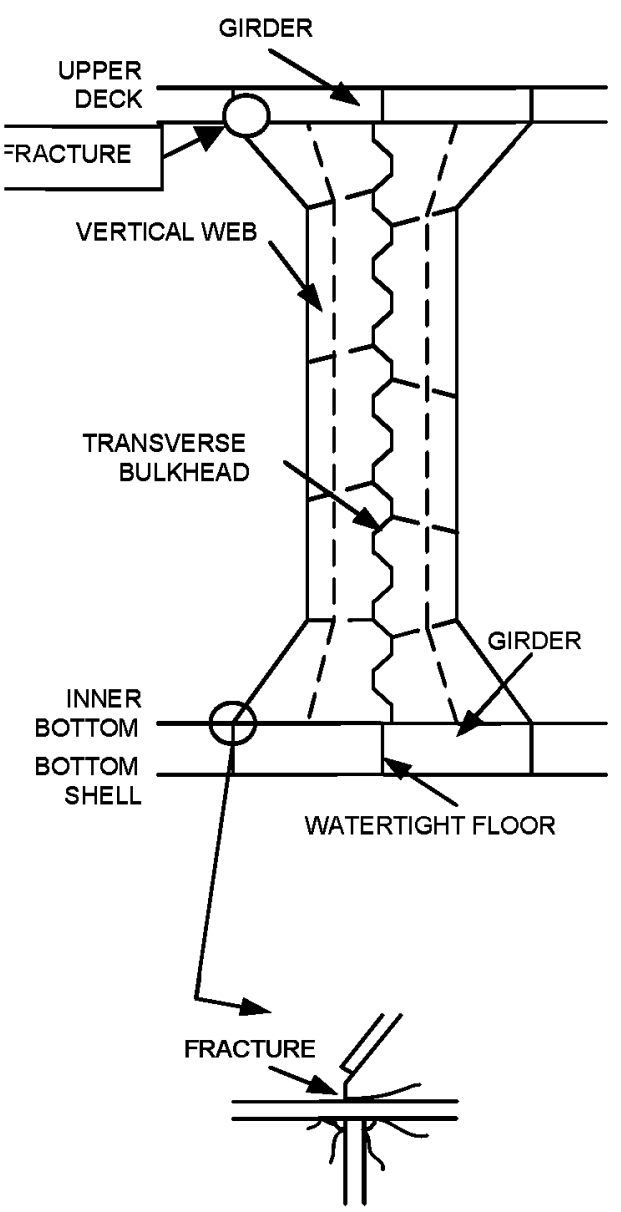

Sketch of repair

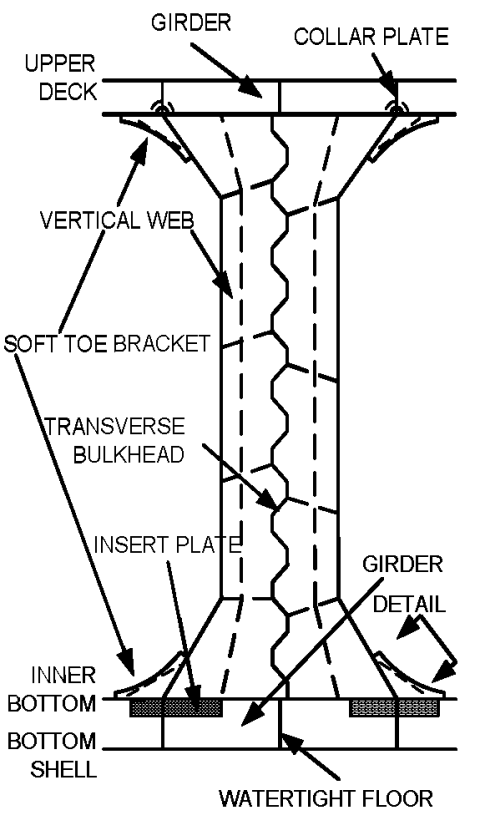

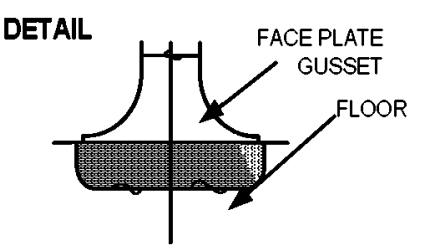

Factors which may have caused damage

1. Stress concentration at toe of bracket due to sniped face plate and scallop in way.

Notes on repairs

See Sketch.

OIL Tankers	Guidelines for Surveys, Assessment and Repair of Hull Structure	
Group 5	Cargo area	Example No.
	Transverse Bulkhead in cargo tank	6
Detail of damage	Vertically corrugated bulkhead without stool, connection to deck and inner bottom	

Sketch of damage

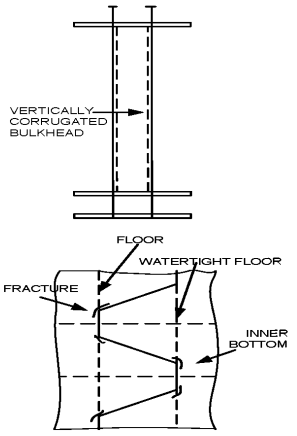

Sketch of repair

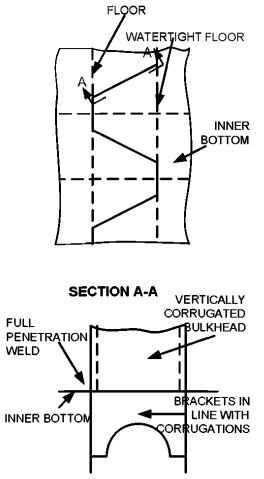

Factors which may have caused damage

1. Stress concentration due to unsupported corrugation web.
2. High through thickness stress, lamellar tearing.
3. Weld details and dimensions.
4. Misalignment between face of corrugation and floor underneath.
5. Cut-outs and scallops or air holes increasing the stress in the floor.
6. Insufficient through thickness properties of inner bottom plate.

Notes on repairs

See Sketch.

OIL Tankers	Guidelines for Surveys, Assessment and Repair of Hull Structure	
Group 5	Cargo area	Example No.
	Transverse Bulkhead in cargo tank	7
Detail of damage	Fracture at connection of vertically corrugated transverse bulkhead with stool to shelf plate and lower stool plate.	

Sketch of damage

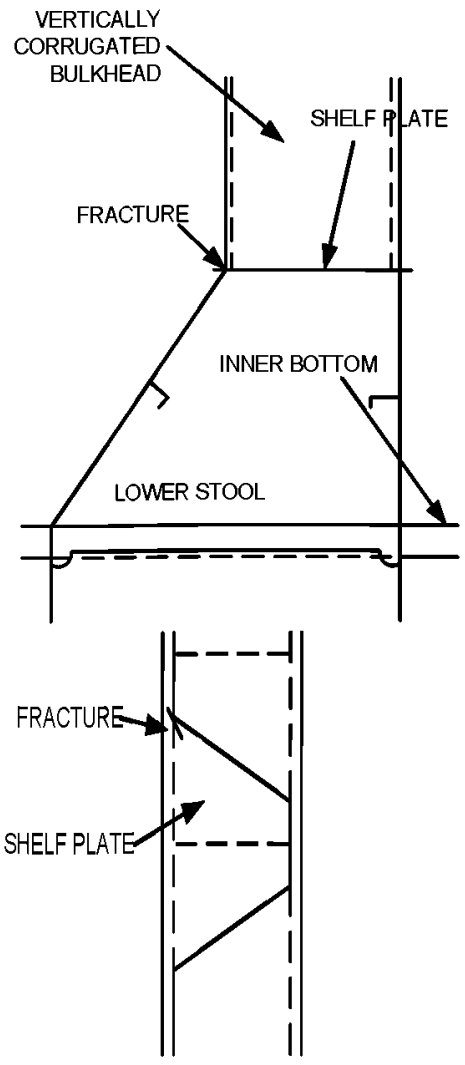

Sketch of repair

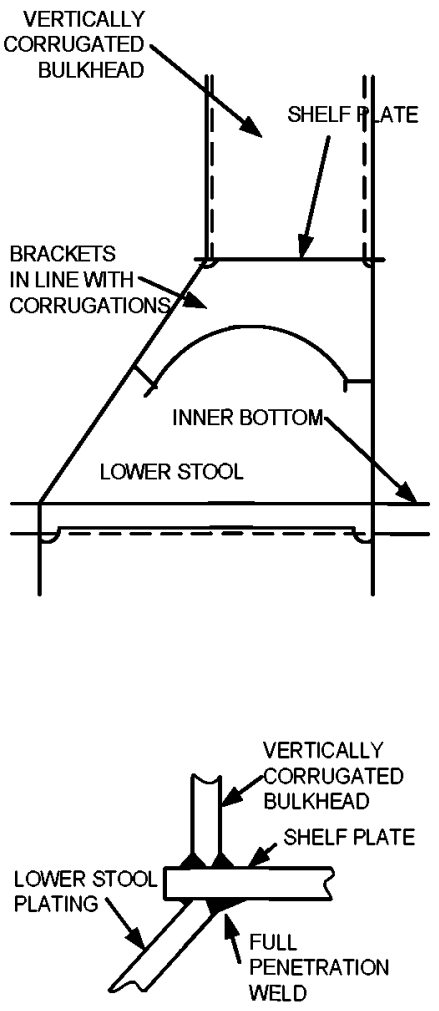

Factors which may have caused damage

1. Stress concentration due to unsupported corrugation web.
2. High through thickness stress, lamellar tearing.
3. Weld details and dimensions.
4. Misalignment.
5. Insufficient thickness of stool side plating in relation to corrugation flange thickness.

Notes on repairs

See Sketch.

OIL Tankers	Guidelines for Surveys, Assessment and Repair of Hull Structure	
Group 5	Cargo area	Example No.
	Transverse Bulkhead in cargo tank	8
Detail of damage	Fracture at connection of lower stool plate to inner bottom tank. Lower stool plate connected to vertically corrugated transverse bulkhead.	

Sketch of damage

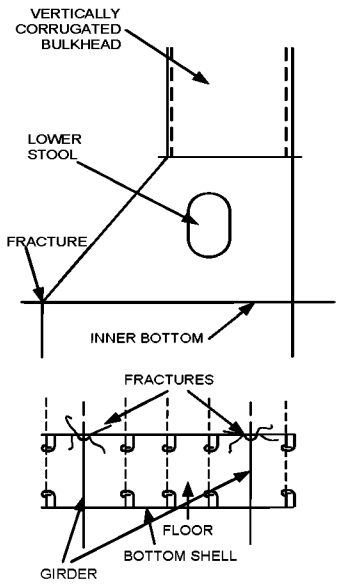

Sketch of repair

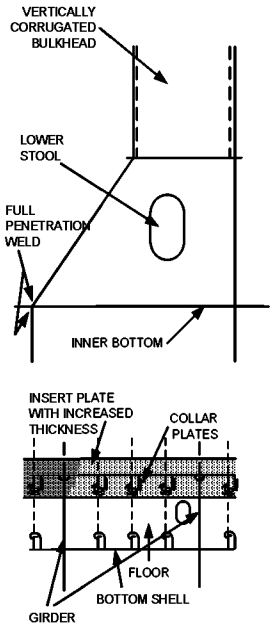

Factors which may have caused damage

1. Misalignment between stool side plating and floor and/or stool webs and girders of double bottom.
2. Insufficient thickness of floor compared to stool thickness.
3. Scallops, cut-outs, air hole reducing the connecting area too much.
4. Weld details and dimensions.
5. Lamellar tearing of inner bottom plating.

Notes on repairs

See Sketch.

OIL Tankers	Guidelines for Surveys, Assessment and Repair of Hull Structure	
Group 5	Cargo area	Example No.
	Transverse Bulkhead in cargo tank	9
Detail of damage	Fracture at connection of transverse bulkhead to knuckle inner bottom/girder	

Sketch of damage

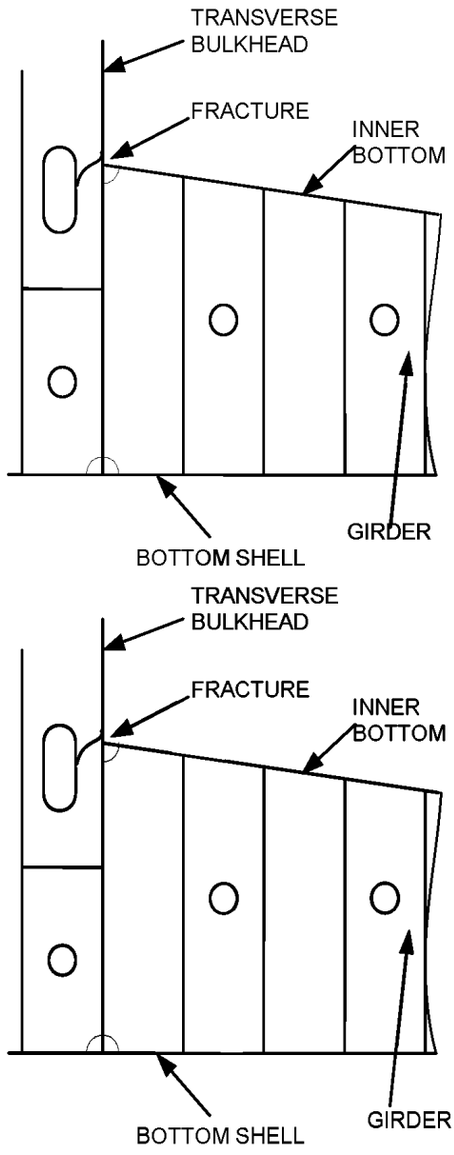

Sketch of repair

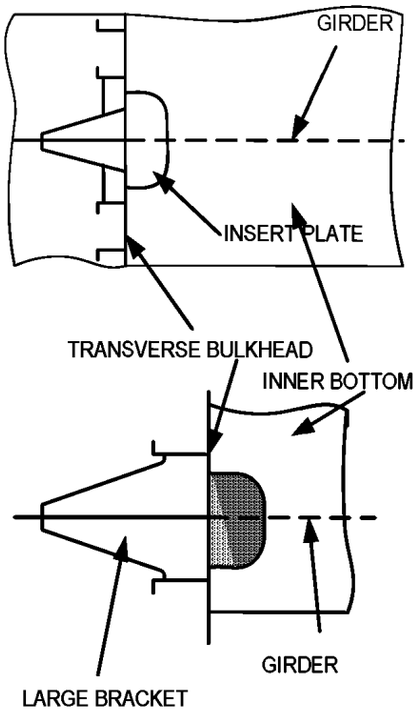

Factors which may have caused damage

1. High stress concentration.
2. Discontinuity of structural members at knuckle joint.

Notes on repairs

See Sketch.

Group 6 Deck Structure

Contents

1 General

2 What to look for on deck
2.1 Material wastage
2.2 Deformations
2.3 Fractures

3 What to look for underdeck
3.1 Material wastage
3.2 Deformations
3.3 Fractures

4 General comments on repair
4.1 Material wastage
4.2 Deformations
4.3 Fractures
4.4 Miscellaneous

Examples of structural detail failures and repairs – Group 6

Example No.	Title
1	Deformed and fractured deck plating around tug bitt
2	Fracture at ends of deck transverse
3	Fractured deck longitudinal tripping bracket at intercostals deck girders
4	Fractured deck plating in crane pedestal support (midships)
5	Fractured deck plating in way of deck pipe support stanchions (midships)

1 General

1.1 Deck structure is subjected to longitudinal hull girder bending, caused by cargo distribution and wave actions. Moreover deck structure may be subjected to severe load due to green sea on deck. Certain areas of the deck may also be subjected to additional compressive stresses caused by slamming or bow flare effect at the fore ship in heavy weather.

1.2 The marine environment, the humid atmosphere due to the water vapour from the cargo in cargo tanks, sulphur contained in the cargo and the high temperature on deck plating due to heating from the sun may result in accelerated corrosion of plating and stiffeners making the structure more vulnerable to the exposures described above.

2 What to look for on deck

2.1 Material wastage

2.1.1 General corrosion of the deck structure may be observed by visual inspection. Special attention should be paid to areas where pipes, e.g. cargo piping, COW piping, fire main pipes, hydraulic pipes, etc are fitted close to the plating, making proper maintenance of the protective coating difficult to carry out.

2.1.2 Grooving corrosion is often found in or beside welds, especially in the heat affected zone. This corrosion is sometimes referred to as 'inline pitting attack' and can also occur on vertical members and flush sides of bulkheads in way of flexing. The corrosion is caused by the galvanic current generated from the difference of the metallographic structure between the heat affected zone and base metal. Coating of the welds is generally less effective compared to other areas due to roughness of the surface, which exacerbates the corrosion. Grooving corrosion may lead to stress concentrations and further accelerate the corrosion process. Grooving corrosion may be found in the base material where coating has been scratched or the metal itself has been mechanically damaged.

2.1.3 Pitting corrosion may occur throughout the deck plating. The combination of accumulated water with scattered residue of certain cargoes may create a corrosive reaction.

2.2 Deformations

2.2.1 Plate buckling (between stiffeners) may occur in areas subjected to in-plane compressive stresses, in particular if corrosion is in evidence. Special attention should be

paid to areas where the compressive stresses are perpendicular to the direction of the stiffening system.

2.2.2 Deformed structure may be observed in areas of the deck plating. In exposed deck area, in particular deck forward, deformation of structure may result from shipping green water.

2.3 Fractures

2.3.1 Fractures in areas of structural discontinuity and stress concentration will normally be detected by close-up survey. Special attention should be given to the structures at cargo hatches in general and to corners of deck openings in particular.

2.3.2 Fractures initiated in the deck plating may propagate across the deck resulting in serious damage to hull structural integrity.

2.3.3 Main deck areas subject to high concentration of stress especially in way of bracket toe and heel connections of the loading/discharge manifold supports to main deck are to be close up examined for possible fractures. Similarly the main deck in way of the areas of the stanchion supports to main deck of the hose saddles should be close up examined for possible fractures due to the restraints caused by the long rigid hose saddle structure.

3 What to look for underdeck

3.1 Material wastage

3.1.1 The level of wastage of under-deck stiffeners may have to be established by means of thickness measurements. The combined effect of the marine environment and the high humidity atmosphere within wing ballast tanks and cargo tanks will give rise to a high corrosion rate.

3.2 Deformations

3.2.1 Buckling should be looked for in the primary supporting structure. Such buckling may be caused by:

(a) Loading deviated from loading manual.
(b) Excessive sea water pressure in heavy weather.
(c) Sea water on deck in heavy weather.
(d) Combination of these causes.

3.2.2 Improper ventilation during ballasting/de-ballasting of ballast tanks or venting of cargo tanks may cause deformation in deck structure. If such deformation is observed, internal survey of the affected tanks should be carried out in order to confirm the nature and the extent of damage.

3.3 Fractures

3.3.1 Fractures may occur at the connection between the deck plating, transverse bulkhead and girders/stiffeners. This is often associated with a reduction in area of the connection due to corrosion.

3.3.2 Fatigue fractures may also occur in way of the underdeck longitudinals bracket toes directly beneath deck handling cranes, if fitted. Fractures may initiate at the deck longitudinal flange at the termination of the bracket toe and propagated through the deck longitudinal web plate. The crack may also penetrate the deck plating if allowed to propagate.

4 General comments on repair

4.1 Material wastage

4.1.1 In the case of grooving corrosion at the transition between two plate thicknesses consideration should be given to renewal of part of, or the entire deck plate.

4.1.2 In the case of pitting corrosion on the deck plating, consideration should be given to renewal of part of or the entire affected deck plate.

4.1.3 When heavy wastage is found on under-deck structure, the whole or part of the structure may be cropped and renewed depending on the permissible diminution levels allowed by the Classification Society concerned.

4.2 Deformations

4.2.1 When buckling of the deck plating has occurred, appropriate reinforcement is necessary in addition to cropping and renewal regardless of the corrosion condition of the plating.

4.3 Fractures

4.3.1 Fractured areas in the main deck plating should be cropped and inserted using good marine practice. The cause of the fracture should be determined because other measures in addition to cropping and inserting may be needed to prevent re-occurrence.

4.4 Miscellaneous

4.4.1 Main deck plating in way of miscellaneous equipment such as cleats, chocks, rollers, hose rails, mooring winches, etc. should be examined for possible defects.

Group 6 Deck Structure

OIL Tankers	Guidelines for Surveys, Assessment and Repair of Hull Structure	
Group 6	Deck Structure	Example No.
		1

Detail of damage	Deformed and fractured deck plating around tug bitt

Sketch of damage

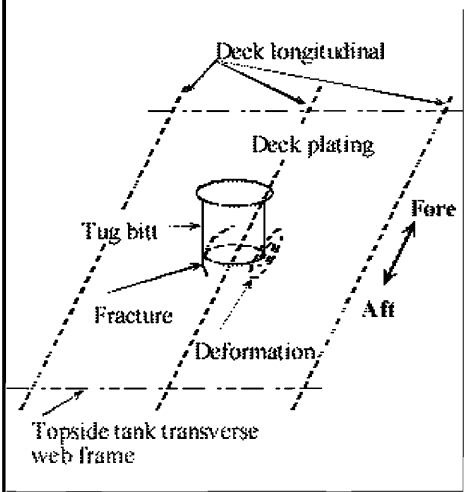

Sketch of repair

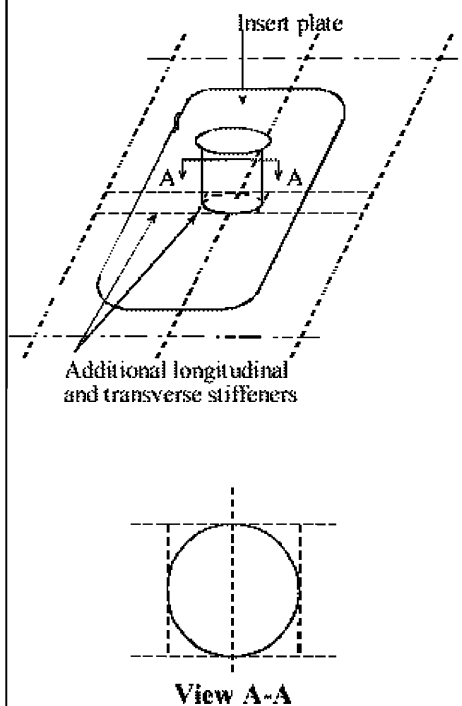

Factors which may have caused damage

1. Insufficient strength

Notes on repairs

1. Fractured/deformed deck plating should be cropped and part renewed.
2. Reinforcement by stiffeners should be considered.

OIL Tankers	Guidelines for Surveys, Assessment and Repair of Hull Structure	
Group 6	Deck Structure	Example No. 2
Detail of damage	Fracture at ends of deck transverse	

Sketch of damage

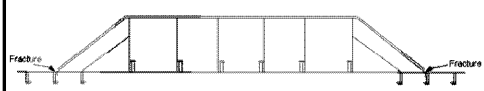

Sketch of repair

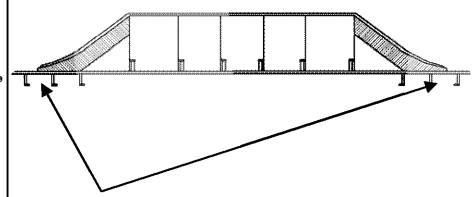

Under deck transverse is to be described as mentioned in the following "Note on repairs".
"Increase bracket length to end between under deck longitudinals and align end to under deck transverse."

Factors which may have caused damage

1. High stress due to toes bracket ending at cut out for longitudinal.

Notes on repairs

See Sketch.

1. Increase bracket length to end between underdeck longitudinals and align end to underdeck transverse.
2. Install fitted collar rather than lapped collar.
3. Insert deck plating if fracture extends into deck.

OIL Tankers	Guidelines for Surveys, Assessment and Repair of Hull Structure	
Group 6	Deck Structure	Example No.
		3
Detail of damage	Fractured deck longitudinal tripping bracket at intercostals deck girders	

Sketch of damage

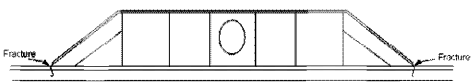

Sketch of repair

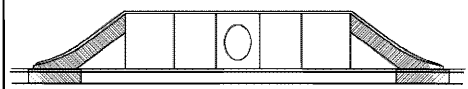

Factors which may have caused damage

1. Fractures due to inadequate end bracket to deck plate resulting in high nominal stress.

Notes on repairs

See Sketch.

1. Taper face plate

OIL Tankers	Guidelines for Surveys, Assessment and Repair of Hull Structure	
Group 6	Deck Structure	Example No.
		4
Detail of damage	Fractured deck plating in crane pedestal support (midships)	

Sketch of damage

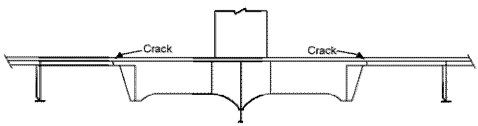

Sketch of repair

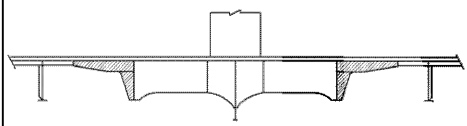

Factors which may have caused damage

1. High stress concentrations at the bracket toes.

Notes on repairs

1. Deck plate insert to be thicker than original.
2. Soft brackets may also be used.

OIL Tankers	Guidelines for Surveys, Assessment and Repair of Hull Structure	
Group 6	Deck Structure	Example No. 5
Detail of damage	Fractured deck plating in way of deck pipe support stanchions (midships)	

Sketch of damage

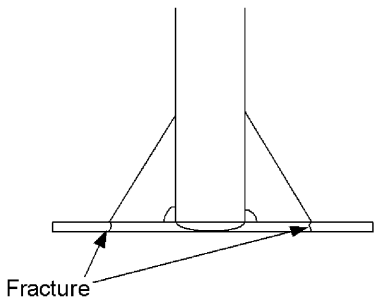

Sketch of repair

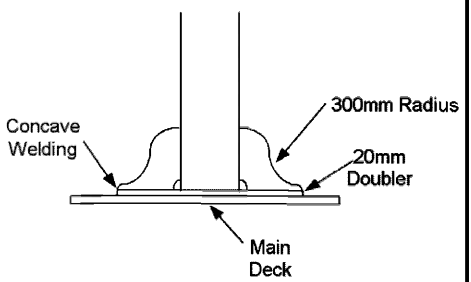

Factors which may have caused damage

1. Stanchions experience more severe relative displacements from hull girder bending.

Notes on repairs

See Sketch.

Group 7 Fore and Aft End Regions

- Area 1 Fore End Structure
- Area 2 Aft End Structure

Area 1 Fore End Structure

Contents

1 General

2 What to look for
2.1 Material wastage
2.2 Deformations
2.3 Fractures

3 General comments on repair
3.1 Material wastage
3.2 Deformations
3.3 Fractures

Examples of structural detail failures and repairs – Group 7

Example No.	Title
1	Fracture in forecastle deck plating at bulwark
2	Fractures in side shell plating in way of chain locker
3	Fractures and deformation of bow transverse web in way of cut-outs for side longitudinals
4	Fractured vertical web at the longitudinal stiffener ending in way of the parabolic bow structure.
5	Fractured stringer end connection in way of the parabolic bow structure
6	Fracture at end of longitudinal at bow structure.
7	Fracture and buckle of bow transverse web frame in way of longitudinal cut-outs
8	Buckled and tripped breasthooks

1 General

1.1 Due to the high humidity salt water environment, wastage of the internal structure in the forepeak ballast tank can be a major problem for many, and in particular ageing ships. Corrosion of structure may be accelerated where the tank is not coated or where the protective coating has not been properly maintained, and can lead to fractures of the internal structure and the tank boundaries.

1.2 Deformation can be caused by contact, which can result in damage to the internal structure leading to fractures in the shell plating.

1.3 Fractures of internal structure in the fore peak tank and spaces can also result from wave impact load due to slamming and panting.

1.4 Forecastle structure is exposed to green water and can suffer damage such as deformation of deck structure, deformation and fracture of bulwarks and collapse of mast, etc.

1.5 Shell plating around anchor and hawse pipe may suffer corrosion, deformation and possible fracture due to movement of improperly stowed anchor.

2 What to look for

2.1 Material wastage

2.1.1 Wastage (and possible subsequent fractures) is more likely to be initiated at the locations as indicated in **Figure 1** and particular attention should be given to these areas. A close-up survey should be carried out with selection of representative thickness measurements to determine the extent of corrosion.

2.1.2 Structure in chain locker is liable to have heavy corrosion due to mechanical damage to the protective coating caused by the action of anchor chains. In some ships, especially smaller ships, the side shell plating may form boundaries of the chain locker and heavy corrosion may consequently result in holes in the side shell plating.

2.2 Deformations

2.2.1 Contact with quay sides and other objects can result in large deformations and fractures of the internal structure. This may affect the watertight integrity of the tank boundaries and collision bulkhead. A close-up survey of the damaged area should be carried out to determine the extent of the damage.

2.3 Fractures

2.3.1 Fractures in the fore peak tank are normally found by close-up survey of the internal structure.

2.3.2 Fractures are often found in transition region and reference should be made to examples provided in the other Groups.

2.3.3 Fractures that extend through the thickness of the plating or through the boundary welds may be observed during pressure testing of tanks.

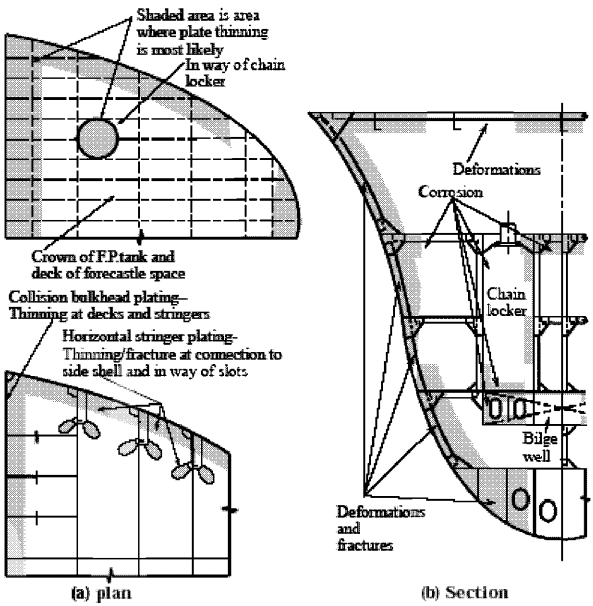

Fig 1 Fore end structure - Potential problem areas

3 General comments on repair

3.1 Material wastage

3.1.1 The extent of steel renewal required can be established based on representative thickness measurements. Where part of the structure has deteriorated to the permissible minimum thickness, then the affected area is to be cropped and renewed. Repair work in tanks requires careful planning in terms of accessibility.

3.2 Deformations

3.2.1 Deformed structure caused by contact should be cropped and part renewed or faired in place depending on the nature and extent of damage.

3.3 Fractures

3.3.1 Fractures of a minor nature may be veed-out and rewelded. Where cracking is more extensive, the structure is to be cropped and renewed. In the case of fractures caused by sea loads, increased thickness of plating and/or design modification to reduce stress concentrations should be considered (See Examples 1 and 5).

Group 7 Area 1 Fore End Structure

OIL Tankers	Guidelines for Surveys, Assessment and Repair of Hull Structure	
Group 7	Fore region	Example No.
Area 1	Forecastle	1
Detail of damage	Fracture in forecastle deck plating at bulwark	

Sketch of damage

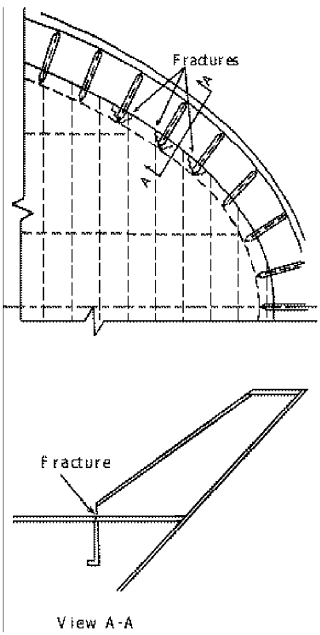

Sketch of repair

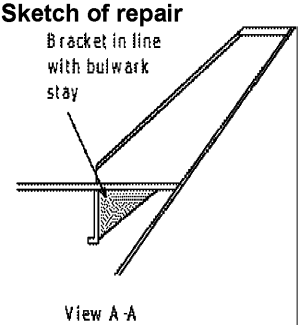

Factors which may have caused damage

1. Bow Flare effect in heavy weather.
2. Stress concentration due to poor design.

Notes on repairs

1. Fractured deck plating should be cropped and renewed.
2. Bracket in line with the bulwark stay to be fitted to reduce stress concentration.

OIL Tankers	Guidelines for Surveys, Assessment and Repair of Hull Structure	
Group 7	Fore region	Example No.
Area 1	Chain locker	2
Detail of damage	Fractures in side shell plating in way of chain locker	

Sketch of damage

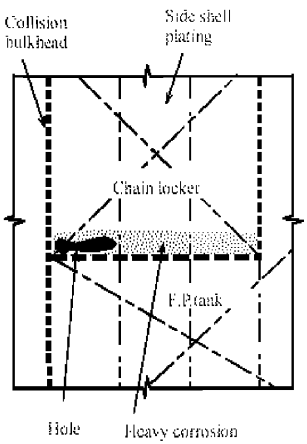

Sketch of repair

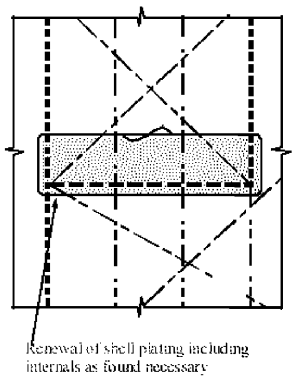

Factors which may have caused damage

1. Heavy corrosion in region where mud is accumulated.

Notes on repairs

1. Corroded plating should be cropped and renewed.
2. Protective coating should be applied.

OIL Tankers	Guidelines for Surveys, Assessment and Repair of Hull Structure	
Group 7	Fore region	Example No.
Area 1	Forepeak ballast tank	3
Detail of damage	Fractures and deformation of bow transverse webs in way of cut-outs for side longitudinals	

Sketch of damage

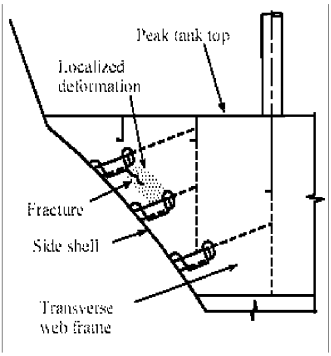

Sketch of repair

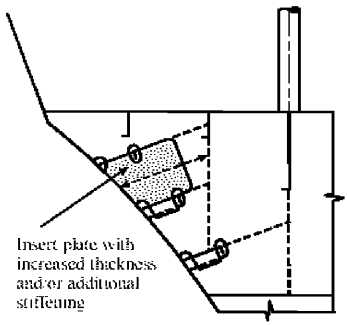

Factors which may have caused damage

1. Localized material wastage in way of coating failure at cut-outs and sharp edges due to working of the structure.
2. Dynamic seaway loading in way of bow flare.

Notes on repairs

1. Sufficient panel strength to be provided to absorb the dynamic loads enhanced by bow flare shape.

OIL Tankers	Guidelines for Surveys, Assessment and Repair of Hull Structure	
Group 7	Fore region	Example No.
Area 1	Forepeak ballast tank	4
Detail of damage	Fractured vertical web at the longitudinal stiffener ending in way of the parabolic bow structure.	

Sketch of damage

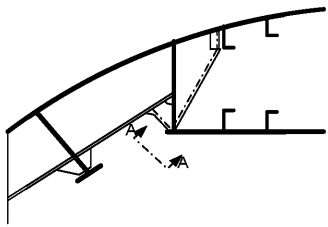

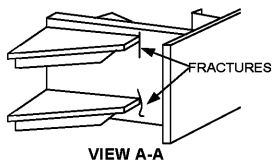

VIEW A-A

Sketch of repair

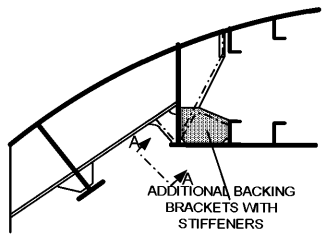

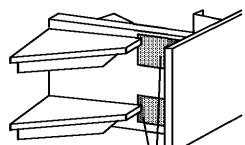

VIEW A-A

Factors which may have caused damage

1. Stress concentrations at bracket ending due to inadequate support at bracket toes in way of connection to web frame members.
2. Localised thinning in way of coating failure at bracket endings due to flexing of the structure.
3. Dynamic seaway loadings at bow causing flexing at bracket endings.

Notes on repairs

See Sketch.

OIL Tankers	Guidelines for Surveys, Assessment and Repair of Hull Structure	
Group 7	Fore region	Example No.
Area 1	Forepeak ballast tank	5
Detail of damage	Fractured stringer end connection in way of the parabolic bow structure	

Sketch of damage

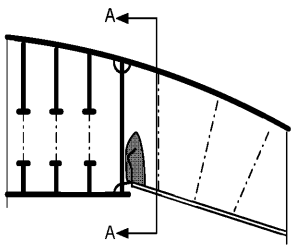

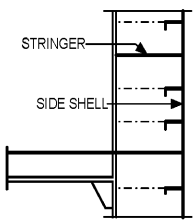

VIEW A-A

Sketch of repair

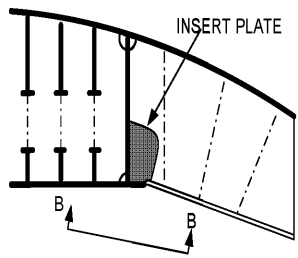

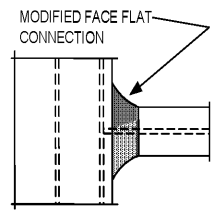

VIEW B-B

Factors which may have caused damage

1. High stress concentration of stringer to stiff girder/deep web intersection due to discontinuity of faceplate.
2. Localised thinning in way of coating failure at stringer connection due to flexing of the structure.
3. Dynamic seaway loadings at bow causing flexing in way of detail.

Notes on repairs

See Sketch.

OIL Tankers	Guidelines for Surveys, Assessment and Repair of Hull Structure	
Group 7	Fore region	Example No.
Area 1	Forepeak ballast tank	6
Detail of damage	Fracture at end of longitudinal at bow structure.	

Sketch of damage

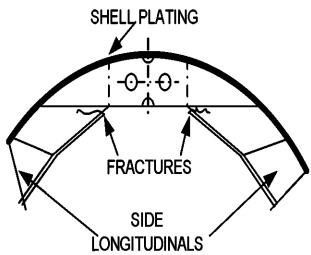

Sketch of repair

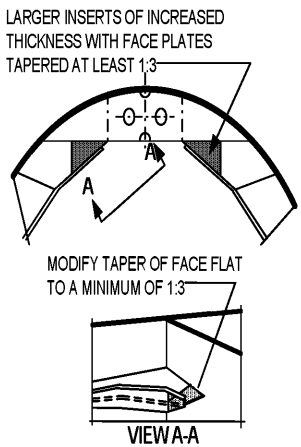

Factors which may have caused damage

1. Inadequate brackets forming the longitudinal endings at bow structure.
2. Localised thinning in way of coating failure at longitudinal endings due to flexing of the structure.
3. Dynamic seaway loadings at bow causing flexing at longitudinal endings.

Notes on repairs

See Sketch.

OIL Tankers	Guidelines for Surveys, Assessment and Repair of Hull Structure	
Group 7	Fore region	Example No.
Area 1	Forepeak ballast tank	7
Detail of damage	Fracture and buckle of bow transverse web frame in way of longitudinal cut-outs.	

Sketch of damage

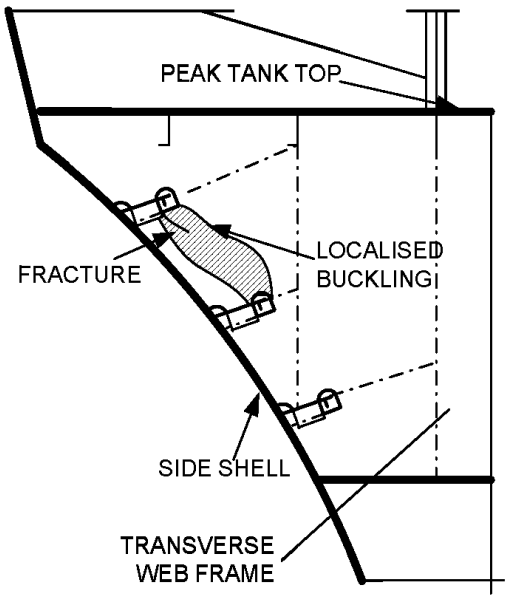

Sketch of repair

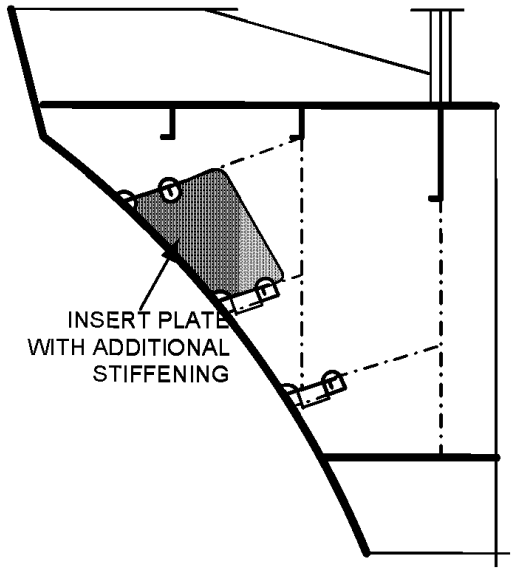

Factors which may have caused damage

1. Localised thinning in way of coating failure at cut-outs and sharp edges due to working of the structure.
2. Dynamic seaway loadings in way of bow flare.

Notes on repairs

See Sketch.

OIL Tankers	Guidelines for Surveys, Assessment and Repair of Hull Structure	
Group 7	Fore region	Example No.
Area 1	Fore peak ballast tank	8
Detail of damage	Buckled and tripped breasthooks	

Sketch of damage

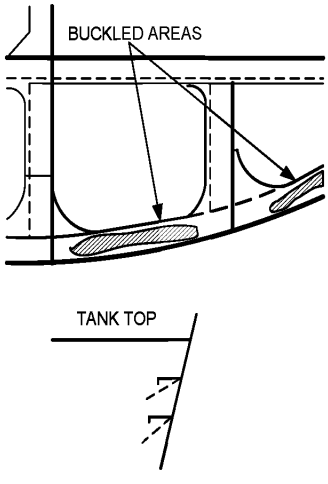

Sketch of repair

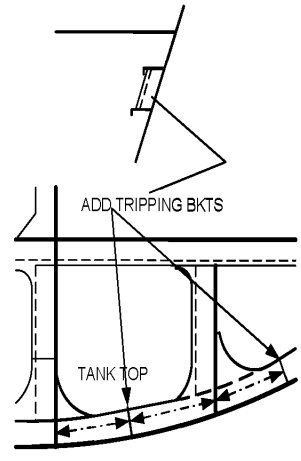

Factors which may have caused damage

1. Bow impact load.
2. Low buckling resistance.

Notes on repairs

See Sketch.

Area 2 Aft End Structure

Contents

1 General

2 What to look for
- 2.1 Material wastage
- 2.2 Deformations
- 2.3 Fractures

3 General comments on repair
- 3.1 Material wastage
- 3.2 Deformations
- 3.3 Fractures

Examples of structural detail failures and repairs – Group 7

Example No.	Title
9	Fractures in bulkhead in way of rudder trunk
10	Fractures at the connection of floors and girders/side brackets
11	Machinery space outside engine room
12	Machinery space outside engine room

1 General

1.1 Due to the high humidity salt water environment, wastage of the internal structure in the aft peak ballast tank can be a major problem for many, and in particular ageing, ships. Corrosion of structure may be accelerated where the tank is not coated or where the protective coating has not been properly maintained, and can lead to fractures of the internal structure and the tank boundaries.

1.2 Deformation can be caused by contact or wave impact action from astern (which can result in damage to the internal structure leading to fractures in the shell plating).

1.3 Fractures to the internal structure in the aft peak tank and spaces can also result from main engine and propeller excited vibration.

2 What to look for

2.1 Material wastage

2.1.1 Wastage (and possible subsequent fractures) is more likely to be initiated at in the locations as indicated in **Figure 1**. A close-up survey should be carried out with selection of representative thickness measurements to determine the extent of corrosion. Particular attention should be given to bunker tank boundaries and spaces adjacent to heated engine room.

2.2 Deformations

2.2.1 Contact with quay sides and other objects can result in large deformations and fractures of the internal structure. This may affect the watertight integrity of the tank boundaries and bulkheads. A close-up examination of the deformed area should be carried out to determine the extent of the damage.

2.3 Fractures

2.3.1 Fractures in weld at floor connections and other locations in the aft peak tank and rudder trunk space can normally only be found by close-up survey.

2.3.2 The structure supporting the rudder carrier may fracture and/or deform due to excessive load on the rudder. Bolts connecting the rudder carrier to the steering gear flat may also suffer damage under such load.

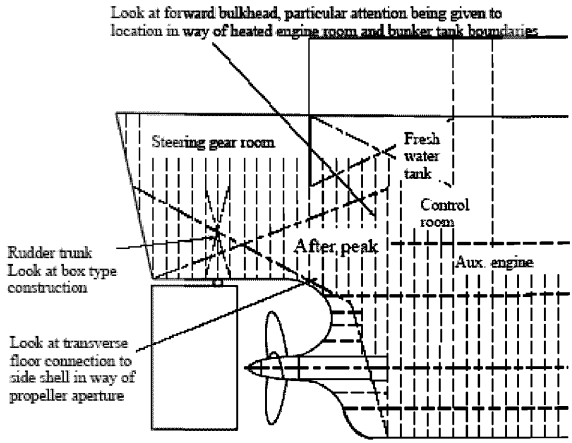

Figure 1 Aft end structure - Potential problem areas

3 General comments on repair

3.1 Material wastage

3.1.1 The extent of steel renewal required can be established based on representative thickness measurements. Where part of the structure has deteriorated to the permissible minimum thickness, then the affected area is to be cropped and renewed. Repair work in tanks requires careful planning in terms of accessibility.

3.2 Deformations

3.2.1 Deformed structure caused by contact should be cropped and part renewed or faired in place depending on the extent of damage.

3.3 Fractures

3.3.1 Fractures of a minor nature may be veed-out and rewelded. Where cracking is more extensive, the structure is to be cropped and renewed.

3.3.2 In order to prevent recurrence of damages suspected to be caused by main engine or propeller excited vibration, the cause of the vibration should be ascertained and additional reinforcements provided as found necessary (See Examples 9 and 10).

3.3.3 In the case of fractures caused by sea loads, increased thickness of plating and/or design modifications to reduce stress concentrations should be considered.

3.3.4 Fractured structure which supports rudder carrier is to be cropped, and renewed, and may have to be reinforced (See Examples 11 and 12).

Area 2 Aft End Structure

OIL Tankers	Guidelines for Surveys, Assessment and Repair of Hull Structure	
Group 7	Aft region	Example No.
Area 2	Aft peak ballast tank	9
Detail of damage	Fractures in bulkhead in way of rudder trunk	

Sketch of damage

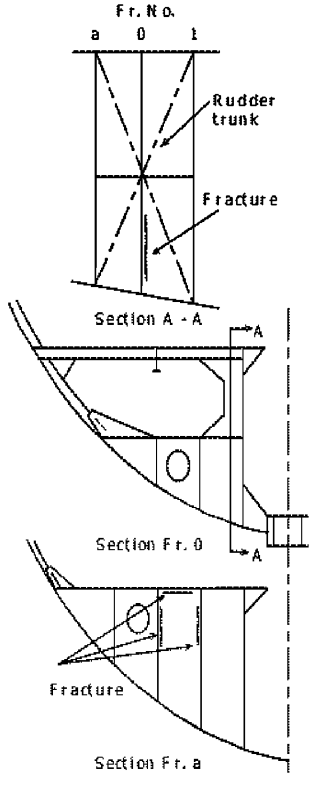

Sketch of repair

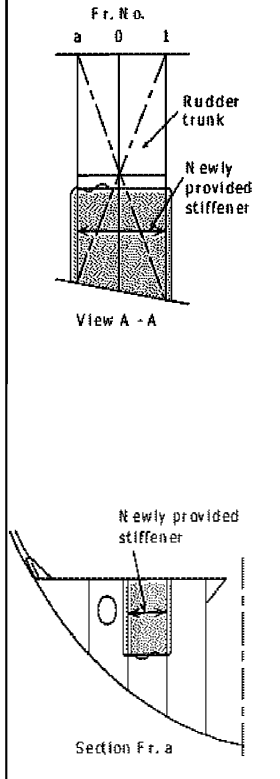

Factors which may have caused damage

1. Vibration.

Notes on repairs

1. The fractured plating should be cropped and renewed.
2. Natural frequency of the plate between stiffeners should be changed, e.g. reinforcement by additional stiffeners.

OIL Tankers	Guidelines for Surveys, Assessment and Repair of Hull Structure	
Group 7	Aft region	Example No.
Area 2	Aft peak ballast tank	10
Detail of damage	Fractures at the connection of floors and girders/side brackets	

Sketch of damage

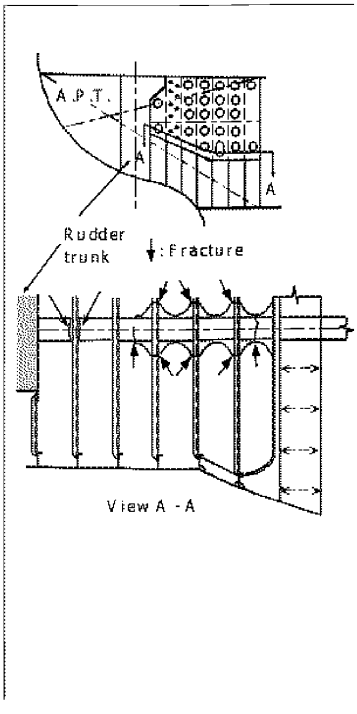

Sketch of repair

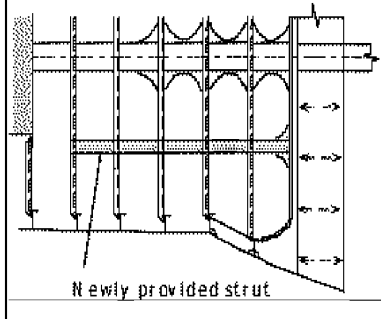

Factors which may have caused damage

1. Vibration.

Notes on repairs

1. The fractured plating should be cropped and renewed.
2. Natural frequency of the panel should be changed, e.g. reinforcement by additional strut.

OIL Tankers	Guidelines for Surveys, Assessment and Repair of Hull Structure	
Group 7	Aft region	Example No.
Area 2	Machinery space outside Engine room	11
Detail of damage	Fractures in flat where rudder carrier is installed in steering gear room	

Sketch of damage

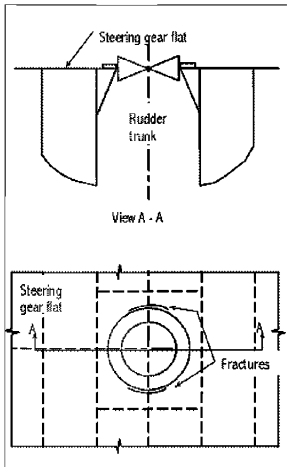

Sketch of repair

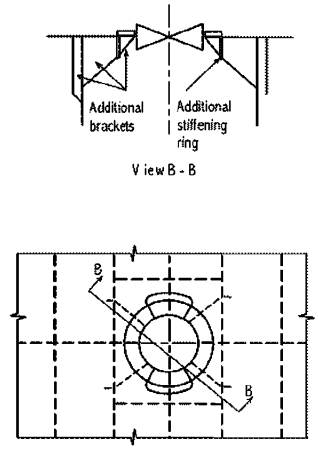

Factors which may have caused damage

1. Inadequate design.

Notes on repairs

1. Fractured plating should be cropped and renewed.
2. Additional brackets and stiffening ring should be fitted for reinforcement.

OIL Tankers	Guidelines for Surveys, Assessment and Repair of Hull Structure	
Group 7	Aft region	Example No.
Area 2	Machinery space outside engine room	12
Detail of damage	Fractures in steering gear foundation brackets and deformed deck plate	

Sketch of damage

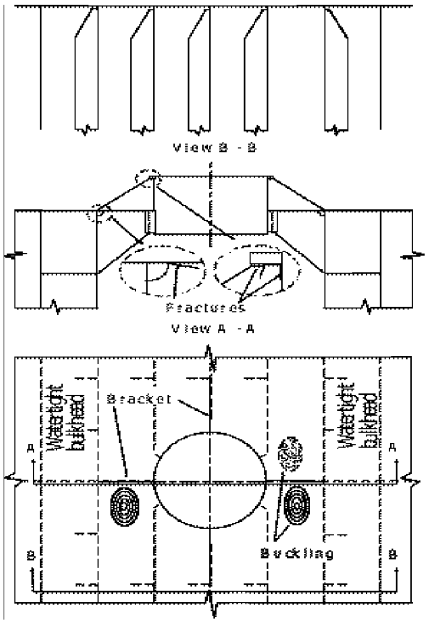

Sketch of repair

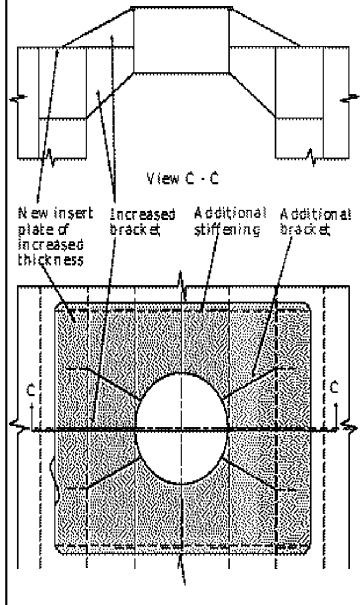

Factors which may have caused damage

1. Insufficient deck strengthening (missing base plate).
2. Insufficient strengthening of steering gear foundation.
3. Bolts of steering gear were not sufficiently pre-loaded.

Notes on repairs

1. New insert base plate of increased plate thickness.
2. Additional longitudinal stiffening at base plate edges.
3. Additional foundation brackets above and under deck (star configuration).

Group 8 Machinery and Accommodation Spaces

- Area 1 Engine Room Structure
- Area 2 Accommodation Structure

Area 1 Engine Room Structure

Contents

1 General

2 What to look for - Engine room survey
2.1 Material wastage
2.2 Fractures

3 What to look for - Tank survey
3.1 Material wastage
3.2 Fractures

4 General comments on repair
4.1 Material wastage
4.2 Fractures

Examples of structural detail failures and repairs – Group 8

Example No.	Title
1	Fractures in brackets at main engine foundation
2	Corrosion in bottom plating under sounding pipe in way of bilge storage tank in engine room
3	Corrosion in bottom plating under inlet/suction/pipe in way of bilge tank in engine room

1 General

The engine room structure is categorized as follows:

- Boundary structure, which consists of upper deck, bulkhead, inner bottom plating, funnel, etc.
- Deep tank structure
- Double bottom tank structure

The boundary structure can generally be inspected routinely and therefore any damages found can usually be easily rectified. Deep tank and double bottom structures, owing to access difficulties, generally cannot be inspected routinely. Damage of these structures is usually only found during dry docking or when a leakage is in evidence.

2 What to look for - Engine room survey

2.1 Material wastage

2.1.1 Tank top plating, shell plating and bulkhead plating adjacent to the tank top plating may suffer severe corrosion caused by leakage or lack of maintenance of sea water lines.

2.1.2 Bilge well should be cleaned and inspected carefully for heavy pitting corrosion caused by sea water leakage at gland packing or maintenance operation of machinery.

2.1.3 Parts of the funnel forming the boundary structure often suffer severe corrosion, which may impair fire fighting in engine room and weathertightness.

3 What to look for - Tank survey

3.1 Material wastage

3.1.1 The environment in bilge tanks, where mixture of oily residue and seawater is accumulated, is more corrosive when compared to other double bottom tanks. Severe corrosion may result in holes in the bottom plating, especially under sounding pipe. Pitting corrosion caused by seawater entered through air pipe is seldom found in cofferdam spaces.

3.2 Fractures

3.2.1 In general, deep tanks for fresh water or fuel oil are located in engine room. The structure in these tanks often sustains fractures due to vibration. Fracture of double bottom structure in engine room is seldom found due to its high structural rigidity.

4 General comments on repair

4.1 Material wastage

4.1.1 Where part of the structure has deteriorated to the permissible minimum thickness, then the affected area is to be cropped and renewed. Repair work in double bottom will require careful planning in terms of accessibility and gas freeing is required for repair work in fuel oil tanks.

4.2 Fractures

4.2.1 For fatigue fractures caused by vibration, in addition to the normal repair of the fractures, consideration should be given to modification of the natural frequency of the structure to avoid resonance. This may be achieved by providing additional structural reinforcement, however, in many cases, a number of tentative tests may be required to reach the desired solution.

Group 8 Area 1 Engine Room Structure

OIL Tankers	Guidelines for Surveys, Assessment and Repair of Hull Structure	
Group 8	Machinery and accommodation spaces	Example No.
Area 1	Engine room	1
Detail of damage	Fractures in brackets at main engine foundation	

Sketch of damage

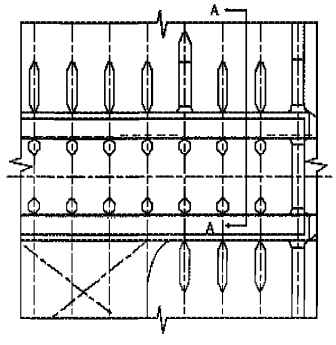

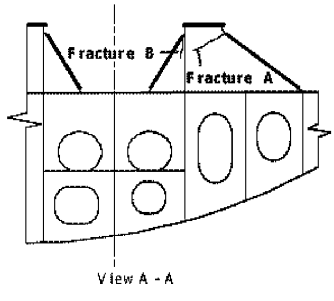

Sketch of repair

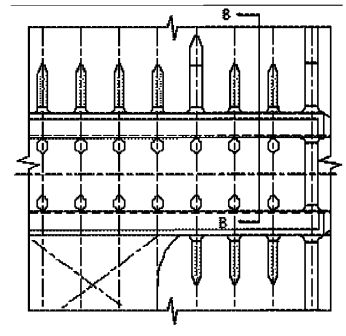

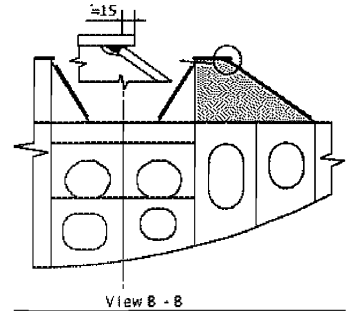

Factors which may have caused damage

1. Vibration of main engine.
2. Insufficient strength of brackets at main engine foundation.
3. Insufficient pre-load of the bolts.

Notes on repairs

1. Fractures may be veed-out and rewelded.
2. New modified brackets at main engine foundation.
3. Or insert pieces and additional flanges to increase section modulus of the brackets.

OIL Tankers	Guidelines for Surveys, Assessment and Repair of Hull Structure	
Group 8	Machinery and accommodation spaces	Example No.
Area 1	Engine room	2
Detail of damage	Corrosion in bottom plating under sounding pipe in way of bilge storage tank in engine room	

Sketch of damage

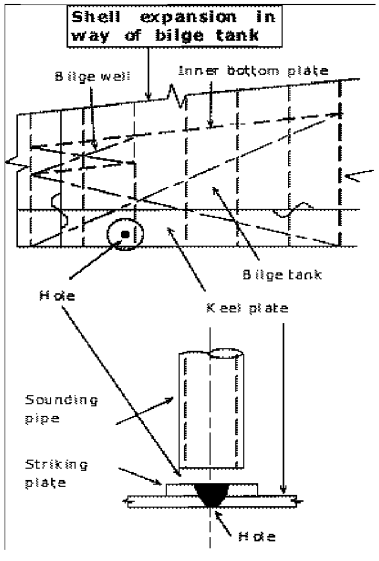

Sketch of repair

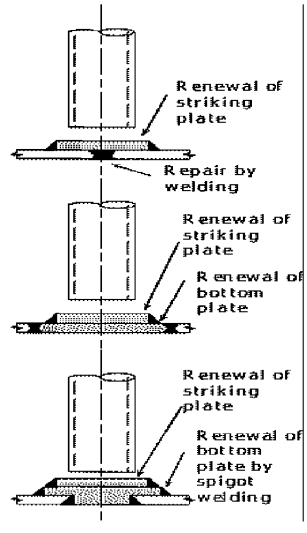

Factors which may have caused damage

1. Heavy corrosion of bottom plating under sounding pipe.

Notes on repairs

1. Corroded striking plating should be renewed.
2. Bottom plate should be repaired depending on the condition of corrosion.

(Note):
Repair by spigot welding can be applied to the structure only when the stress level is considerably low. Generally this procedure cannot be applied to the repair of bottom plating of ballast tanks in cargo tank region.

OIL Tankers	Guidelines for Surveys, Assessment and Repair of Hull Structure	
Group 8	Machinery and accommodation spaces	Example No.
Area 1	Engine room	3
Detail of damage	Corrosion in bottom plating under inlet/suction/pipe in way of bilge tank in engine room	

Sketch of damage

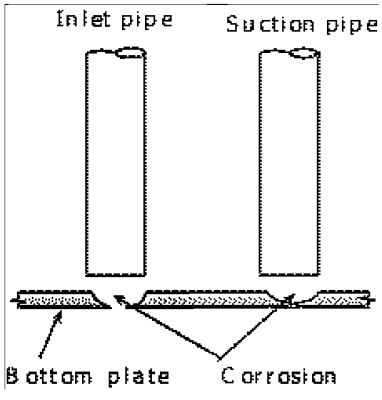

Sketch of repair

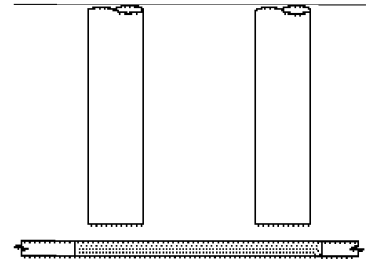

Factors which may have caused damage

1. Heavy corrosion of bottom plating under the inlet/suction pipe.

Notes on repairs

1. Corroded bottom plate is to be cropped and part renewed. Thicker plate is preferable.
2. Replacement of pipe end by enlarged conical opening (similar to suction head in ballast tank) is preferable.

Area 2 Accommodation Structure

Contents

1 General

Group 8 Figures and/or Photographs – Area 2

Example No.	Title
Photo 1	Corroded accommodation house side structure

1 General

Corrosion is the main concern in accommodation structure and deckhouses of aging ships. Owing to the lesser thickness of the structure plating, corrosion can propagate through the thickness of the plating resulting in holes in the structure.

Severe corrosion may be found in exposed deck plating and deck house side structure adjacent to the deck plating where water is liable to accumulate (See **Photograph 1**). Corrosion may also be found in accommodation bulkheads around cut-out for fittings, such as doors, side scuttles, ventilators, etc., where proper maintenance of the area is relatively difficult. Deterioration of the bulkheads including fittings may impair the integrity of weathertightness.

Fatigue fractures caused by vibration may be found, in the structure itself and in various stays of the structures, mast, antenna, etc.. For such fractures, consideration should be given to modify the natural frequency of the structure by providing additional reinforcement during repair.



Photograph 1 Corroded accommodation house side structure

No. 132 (Dec 2013) Human Element Recommendations for structural design of lighting, ventilation, vibration, noise, access and egress arrangements

Table of Contents

Section 1 - Introduction

1.1 Scope and objectives

1.2 Application

1.3 Definitions

1.4 Recommendation overview

Section 2 - The Human Element

2.1 Regulatory expectations

2.2 Human Element Considerations

Section 3 - Rationale for considering the Human Element in the design of lighting, ventilation, vibration, noise, access and egress arrangements

3.1 General

3.2 Lighting
3.2.1 Task requirements
3.2.2 Ergonomic design principles
3.2.3 Conditions
3.2.4 Implications for structures

3.3 Ventilation
3.3.1 Task requirements
3.3.2 Ergonomic design principles
3.3.3 Conditions
3.3.4 Implications for structures

3.4 Vibration
3.4.1 Task requirements
3.4.2 Ergonomic design principles
3.4.3 Conditions
3.4.4 Implications for structures

3.5 Noise
3.5.1 Task requirements
3.5.2 Ergonomic design principles
3.5.3 Conditions
3.5.4 Implications for structures

No. 132 (cont)

3.6 Access and Egress
3.6.1 Task requirements
3.6.2 Ergonomic design principles
3.6.3 Conditions
3.6.4 Implications for structures

Section 4 - Ergonomic Structural Arrangement Recommendations

4.1 General

4.2 Lighting Design
4.2.1 Aims
4.2.2 Application
4.2.3 Locations
4.2.4 Structural Arrangements

4.3 Ventilation Design
4.3.1 Aims
4.3.2 Application
4.3.3 Locations
4.3.4 Structural Arrangements

4.4 Vibration Design
4.4.1 Aims
4.4.2 Application
4.4.3 Locations
4.4.4 Structural Arrangements

4.5 Noise Design
4.5.1 Aims
4.5.2 Application
4.5.3 Locations
4.5.4 Structural Arrangements

4.6 Access and Egress Design
4.6.1 Aims
4.6.2 Application
4.6.3 Locations
4.6.4 Structural Arrangements

Annex A - Recommended Measurement Values
1.1 General
1.2 Lighting
1.3 Ventilation
1.4 Vibration
1.5 Access

Annex B - Relevant Standards, Guidelines and Practices
2.1 Lighting
2.2 Ventilation
2.3 Vibration
2.4 Noise
2.5 Access

No. 132 (cont)

Section 1 - Introduction

1.1 Scope and objectives

The objectives of this recommendation are to summarise information for human element and ergonomics during the structural design and arrangement of ships, including:

a) Stairs, vertical ladders, ramps, walkways and work platforms used for permanent means of access and/or for inspection and maintenance operations according to 9.2.1.1 and 9.3.1 of IMO Resolution MSC.296(87).

b) Structural arrangements to facilitate the provision of adequate lighting, ventilation, and to reduce noise and vibration in manned spaces according to 9.2.1.2, 9.3.2, and 9.3.3 of IMO Resolution MSC.296(87).

c) Structural arrangements to facilitate the provision of adequate lighting and ventilation in tanks or closed spaces for the purpose of inspection, survey and maintenance according to 9.2.1.3 and 9.3.4 of IMO Resolution MSC.296(87).

d) Structural arrangements to facilitate emergency egress of inspection personnel or ships' crew from tanks, holds, voids according to 9.2.1.4 and 9.3.5 of IMO Resolution MSC.296(87).

1.2 Application

This document is an IACS non mandatory recommendation on human element considerations during the structural design and arrangement of ships under the scope and objectives specified in 1.1 above. In addition, this document also provides information for industry best practices regarding human element considerations for design of lighting, ventilation, vibration, noise, access & egress.

1.3 Definitions

Ergonomics: 'Ergonomics is the scientific discipline concerned with the understanding of interactions among humans and other elements of a system, and the profession that applies theory, principles, data, and methods to design in order to optimize human well-being and overall system performance.' (Source: International Ergonomics Association, 2013)

Human element: 'A complex multi-dimensional issue that affects maritime safety, security and marine environmental protection. It involves the entire spectrum of human activities performed by ships' crews, shore-based management, regulatory bodies, recognised organizations, shipyards, legislators, and other relevant parties, all of whom need to co-operate to address human element issues effectively.' (Source: IMO Resolution A.947(23))

1.4 Recommendation overview

This document is laid out in a number of sections and annexes with the purpose of presenting clear guidance on applying good ergonomic practice for design for lighting, ventilation, vibration, noise, access & egress.

- **Section 2** – The purpose of this section is to explain why the human element is increasingly seen as an important topic and how the regulations that govern shipping are increasingly putting more emphasis on the human element.

No. 132 (cont)

- **Section 3** – The purpose of this section is to present a rationale for why the human element should be considered for the recommendation criteria – lighting, ventilation, vibration, noise, access and egress arrangements – and how this will have an implication for structures.
- **Section 4** – The purpose of this section is to present more detailed structural arrangement recommendations for each of the criteria – lighting, ventilation, vibration, noise, access and egress arrangements.
- **Annex A** – The Annex provides designers with measurement values for some of the criteria that can aid designers when applying design recommendations. They provide the designer with additional information that can assist in making design judgements.
- **Annex B** – The Annex presents a list of relevant standards that bear some relation to good ergonomic practice.

No. 132 (cont)

Section 2 - The Human Element

2.1 Regulatory expectations

The regulations that govern the marine industry are gradually putting more emphasis on the human element. In general, the interest in the 'people aspects' of regulations is increasing due to the many rapid changes in the marine environment.

IMO Resolution A.947(23): Human Element Vision, Principles and Goals for the Organization

The IMO (according to Resolution A.947(23)) refers to the human element as:

"A complex multi-dimensional issue that affects maritime safety, security and marine environmental protection. It involves the entire spectrum of human activities performed by ships' crews, shore-based management, regulatory bodies, recognized organizations, shipyards, legislators, and other relevant parties, all of whom need to co-operate to address human element issues effectively."

In other words, anything that influences the interaction between a human and any other human, system or machine onboard ship, while accounting for the capabilities and limitations of the human, the system, and the environment.

IMO Resolution A.947(23) further states *"the need for increased focus on human-related activities in the safe operation of ships, and the need to achieve and maintain high standards of safety, security and environmental protection for the purpose of significantly reducing maritime casualties";* and that *"human element issues have been assigned high priority in the work program of the Organization because of the prominent role of the human element in the prevention of maritime casualties."*

ILO Maritime Labour Convention

The ILO's Maritime Labour Convention (MLC), 2006, provides comprehensive rights and protection at work for the world's seafarer population. It sets out new requirements specifically relating to the working and living conditions on board ships.

Aimed at seafarer health, personal safety and welfare in particular, the new MLC has specific requirements in Regulation 3.1 and Standard A3.1 for accommodation design and construction, especially in relation to living accommodation, sanitary facilities, lighting, noise, vibration, heating and ventilation.

2.2 Human Element Considerations

The human element in a maritime sense can be thought of as including the following;

a) Design and Layout Considerations

Design and layout considers the integration of personnel with equipment, systems and interfaces. Examples of interfaces include: controls, displays, alarms, video-display units, computer workstations, labels, ladders, stairs, and overall workspace arrangement.

It is important for designers and engineers to consider personnel's social, psychological, and physiological capabilities, limitations and needs that may impact work performance. Hardware and software design, arrangement, and orientation should be compatible with personnel

No. 132 (cont)

capabilities, limitations, and needs. Workplace design includes the physical design and arrangement of the workplace and its effect on safety and performance of personnel.

In addition, designers and engineers should be aware of the cultural and regional influences on personnel's behavioural patterns and expectations. This includes, for example, understanding that different cultural meanings with regard to colour exist, or that bulky clothing is needed when using equipment in cold weather. Awareness of potential physical differences (e.g., male/female, tall/short, North American versus South-East Asian) is needed so that the design, arrangement, and orientation of the work environment reflects the full range of personnel.

If these factors are not considered, the workplace design may increase the likelihood of human error. Additional training, operations, and maintenance manuals, and more detailed written procedures cannot adequately compensate for human errors induced by poor design.

b) Ambient Environmental Considerations

This addresses the habitability and occupational health characteristics related to human whole-body vibration, noise, indoor climate and lighting. Substandard physical working conditions undermine effective performance of duties, causing stress and fatigue. Examples of poor working conditions include poor voice communications due to high noise workplaces or physical exhaustion induced by high temperatures. Ambient environmental considerations also include appropriate design of living spaces that assist in avoidance of, and recovery from, fatigue.

c) Considerations Related to Human Capabilities and Limitations

Personnel readiness and fitness-for-duty are essential for vessel safety. This is particularly so as tasks and equipment increase in complexity, requiring ever-greater vigilance, skills, competency and experience. The following factors should be considered when selecting personnel for a task:

- Knowledge, skills, and abilities that stem from an individual's basic knowledge, general training, and experience
- Maritime-specific or craft-specific training and abilities (certifications and licenses) and vessel specific skills and abilities
- Bodily dimensions and characteristics of personnel such as stature, shoulder breadth, eye height, functional reach, overhead reach, weight, and strength
- Physical stamina; capabilities, and limitations, such as resistance to and freedom from fatigue; visual acuity; physical fitness and endurance; acute or chronic illness; and substance dependency
- Psychological characteristics, such as individual tendencies for risk taking, risk tolerance, and resistance to psychological stress.

d) Management and Organizational Considerations

This factor considers management and organizational considerations that impact safety throughout a system lifecycle. The effective implementation of a well-designed safety policy, that includes ergonomics, creates an environment that minimizes risks. Commitment of top management is essential if a safety policy is to succeed. Management's commitment can be demonstrated by:

No. 132 (cont)

- Uniformly enforced management rules for employee conduct
- Easy-to-read and clear management policies
- Allocation of sufficient funds in the owner/operator's budget for operations and for safety programs, including ergonomics, to be properly integrated and implemented
- Work schedules arranged to minimize employee fatigue
- Creation of a high-level management safety position which includes the authority to enforce a safety policy that includes ergonomics
- Positive reinforcement of employees who follow company safety regulations
- Company commitment to vessel installation maintenance.

No. 132 (cont)

Section 3 - Rationale for considering the Human Element in the design of lighting, ventilation, vibration, noise, access and egress arrangements

3.1 General

3.1.1 The design of the on board working environment for the ship's crew should consider environmental factors such as lighting, ventilation, vibration and noise. Insufficient attention paid to the physical working conditions can have an effect on task performance, health and safety and well-being.

3.1.2 The design of stairs, vertical ladders, ramps, walkways and work platforms used for permanent means of access should facilitate safe movement within or among working or habitability areas. Insufficient attention paid to access arrangements can have an effect on task performance and safety. Insufficient attention paid to egress arrangements can have an effect on safe evacuation during an emergency.

3.1.3 The following headings are applied to each of the criteria addressed in this recommendation to give the rationale for what needs to be considered from a human element perspective;

- Task requirements
- Ergonomic design principles
- Conditions
- Implications for structures

3.2 Lighting

3.2.1 Task requirements

- The lighting of crew spaces should facilitate visual task performance as well as the movement of crew members within or between working or habitability areas. It should also aid in the creation of an appropriate aesthetic visual environment. Lighting design involves integrating these aspects to provide adequate illumination for the safety and well-being of crew as well as affording suitable task performance.

- In order to facilitate operation, inspection, and maintenance tasks in normally occupied spaces and inspection, survey and maintenance tasks in closed spaces, the design of lighting should promote;

- task performance, by providing adequate illumination for the performance of the range of tasks associated with the space
- safety, by allowing people enough light to detect hazards or potential hazards
- visual comfort and freedom from eye strain.

3.2.2 Ergonomic design principles

- In order to facilitate the task requirements identified above, the following design principles are identified as needing to be achieved for lighting design. These design principles are based on good ergonomic practice and will form the basis for the development of the structural arrangement recommendations.

- The design of lighting should;

- provide adequate illumination for the performance of the range of tasks associated with the space

No. 132 (cont)

- be suitable for normal conditions and any additional emergency conditions
- provide uniform illumination as far as practicable
- avoid glare and reflections
- avoid bright spots and shadows
- be free of perceived flicker
- be easily maintained and operated
- be durable under the expected area of deployment

3.2.3 Conditions

- The provision of adequate lighting is dependent on several factors which need to be taken into account. These include;

- Time of day and external light characteristics
- Differing proximity to deadlights, windows, doors

3.2.4 Implications for structures

- In order to address the design principles outlined above, there are several implications for the structural arrangements. These implications with regard to structures will address;

- Positioning of luminaires
- Overhead arrangements (stringers, pipes and ductwork, cable trays)
- Positioning of switches and controls
- Provision and position of windows providing natural light
- Control of natural and artificial sources of glare
- Supply of power
- Constrained space lighting (permanent or intrinsically safe portable lighting)

3.3 Ventilation

3.3.1 Task requirements

- In order to facilitate operation, inspection and maintenance tasks in manned spaces, the ventilation system is to be suitable to maintain operator vigilance, comfort, provide thermal protection (from heat and cold) and to aid safe and efficient operations.

- In order to facilitate periodic inspections, survey and maintenance in tanks or closed spaces the means of ventilation is to ensure the safety of personnel in enclosed spaces from poor or dangerous air quality.

3.3.2 Ergonomic design principles

- In order to facilitate the task requirements identified above, the following design principles are identified as needing to be achieved for ventilation / indoor climate design. These design principles are based on accepted ergonomic practice and will form the basis for the development of the structural arrangement recommendations.

- Indoor climate should be designed to;

- provide adequate heating and/or cooling for onboard personnel
- provide uniform temperatures (gradients)
- maintain comfortable zones of relative humidity
- provide fresh air (air exchange) as part of heated or cooled return air

No. 132 (cont)

- provide clean filtered air, free of fumes, particles or airborne pathogens
- monitor gas concentration (CO, CO_2, O_2 etc.)
- be easily adjustable by onboard personnel
- minimise contribution of ventilation noise to living and work spaces
- provide sufficient velocity to maintain exchange rates whilst not being noisy or annoying
- provide means to use natural ventilation
- provide/assess safe air quality while working in enclosed spaces

• Additionally, the design of the ventilation system should give consideration to keep the structural integrity for purposes of fire insulation

3.3.3 Conditions

• Ventilation provisions should accommodate and take into account the following factors;

- extremes of external environmental conditions (highs and lows of temperature and humidity)
- expected human occupancy of work and living spaces
- operating components that contribute heat to a living or working space
- entry into confined spaces for the purpose of inspection

3.3.4 Implications for structures

• In order to address the design principles outlined above, there are several implications for the structural arrangements. These implications with regard to structures will include;

- exterior ambient conditions (sizing the HVAC system)
- indoor air quality (particulate, smoke, O_2, CO_2, other gases)
- Ventilation capacity and air flow
- Water stagnation
- Bio-organisms and toxins
- Pipe and ductwork condensate
- Inspection access, maintenance access
- Noise and vibration control
- Energy efficiency

3.4 Vibration

3.4.1 Task requirements

• In order to facilitate operation, inspection and maintenance tasks in manned spaces, the level of vibration is to be such that it does not introduce injury or health risks to shipboard personnel.

• Additionally, consideration will be made for the impact of vessel motion on human comfort.

• These considerations extend to living and work tasks occurring in habitability and work spaces as well as infrequently occupied spaces such as tanks and small holds entered for the purpose of maintenance or inspection.

3.4.2 Ergonomic design principles

No. 132 (cont)

- In order to facilitate the task requirements identified above, the following design principles were identified as needing to be considered in vibration control. Vessel design should;

- protect onboard personnel from harmful levels of vibration
- protect onboard personnel from levels of vibration impairing job performance
- protect onboard personnel from levels of vibration that interferes with sleep or comfort
- provide protection from both continuous exposure and shock (high peak values)

3.4.3 Conditions

- Vibration control provisions should accommodate and take into account the following factors;

- Continuous service output of prime mover(s)
- Equipment operation (such as thrusters, air compressors and auxiliary generators)
- Course, speed and water depth
- Rudder conditions
- Sea conditions
- Loading conditions

3.4.4 Implications for structures

- In order to meet the design principles outlined above, there are several implications for the structural arrangements to reduce vibration. The implications with regard to structures will address;

- Machinery excitation (main mover)
- Rotating components (turbines)
- Pumps
- Refrigeration
- Air compressors
- Shafting excitation
- Propeller blade tip/hull separation
- Cavitation
- Thrusters and azipods
- Hull and structure response to vibration.
- Resonance of structures
- Location of safety rails, hand holds, seating devices, means to secure loose stock or rolling stock in relation to ship motion

3.5 Noise

3.5.1 Task requirements

- Depending on the level and other considerations, noise can contribute to hearing loss, interfere with speech communications, mask audio signals, interfere with thought processes, disrupt sleep, distract from productive task performance, and induce or increase human fatigue.

- In order to facilitate operation, inspection and maintenance tasks in manned spaces, the level of noise should to be such that it;

- does not impair hearing either permanently or temporarily,
- is not at levels which interfere with verbal communication

No. 132 (cont)

- is not at levels which interfere with the hearing of alarms and signals
- is not at levels that will cause stress, distract from task performance or increase the risk of errors
- does not interfere with the ability to sleep
- does not increase or induce fatigue
- does not reduce habitability or sense of comfort

3.5.2 Ergonomic design principles

- Noise control provisions should accommodate and take into account the following conditions. Vessel design should;

- ensure that onboard personnel are protected from harmful levels of noise (health hazards, hearing loss, cochlear damage)
- ensure that onboard personnel are protected from levels of noise impairing job performance
- ensure that onboard personnel are protected from levels of noise impairing verbal communication and the hearing of signals (such as alarms, bells, whistles, etc.)
- ensure that onboard personnel are protected from levels of noise that interfere with sleep or comfort

3.5.3 Conditions

- The development of provisions to reduce noise is dependent on several factors which need to be taken into account. These include;

- Equipment Operation
- Sea Conditions
- Loading Conditions and cargo operations
- Performance of maintenance or inspection tasks, including infrequently accessed areas.

3.5.4 Implications for structures

- In order to meet the design principles outlined above, there are implications for the structural arrangements to reduce noise, these include;

- Machinery excitation (main mover)
- Hull protrusions
- Rotating components (turbines)
- Pumps
- Refrigeration
- Air compressors, fans, ventilation ductwork, exhaust systems
- Shafting excitation
- Propeller blade tip/hull separation
- Cavitation
- Thrusters and azipods
- Noise abatement / shielding

3.6 Access & Egress

3.6.1 Task requirements

- The design of accesses and access structures of crew spaces should facilitate the safe movement of crew members within or among working or habitability areas. These

No. 132 (cont)

include access structures such as passageways, ladders, ramps, stairs, work platforms, hatches, and doors. Also included are handrails, guard rails, and fall protection devices.

- In order to facilitate operation, inspection, and maintenance tasks in normally occupied spaces and inspection, survey and maintenance tasks in closed spaces, the design of accesses and access structures should promote;

- task performance, by providing adequate configurations and dimensions facilitating human access.
- safety, by providing barriers to falls or other types of injury.

3.6.2 Ergonomic design principles

- In order to facilitate the task requirements identified above, the following design principles are identified as needing to be achieved for access design. These design principles are based on good ergonomic practice and will form the basis for the development of the structural arrangement recommendations.

- The design of access and egress arrangements should;

- provide adequate access for the performance of the range of tasks associated (general access, accommodations access, maintenance and other work access) with the space
- be suitable for normal and emergency conditions
- be sized according to the access (or related) task required
- be sized according to the expected user population
- be easily maintained and operated
- be durable under the expected area of deployment
- accommodate ship motions

3.6.3 Conditions

- The identification of access requirements is dependent on several factors which need to be taken into account when developing recommendations. These include;

- Expected extent of vessel motion and potential interference with walking, standing, or climbing due to instability
- Exposure to external areas that may experience rain, snow, ice, spray, wind or other environmental conditions that may influence the usability and safety of accesses or access aids
- Potential for slips, trips, or falls and provision and design of accesses and access aids preventing their occurrence.

3.6.4 Implications for structures

- In order to address the design principles outlined above, there are several implications for the structural arrangements. These implications with regard to structures will address;

- Provision and size of access structures (based on frequency of use and numbers of crew)
- Locations of accesses
- Exposure to the external elements
- Safety in access to, and use of, access structures

No. 132 (cont)

Section 4 - Ergonomic Structural Arrangement Recommendations

4.1 General

4.1.1 The guidance presented in this section provides detailed structural arrangement recommendations for each of the criteria – lighting, ventilation, vibration, noise, access and egress arrangements.

4.2 Lighting Design

4.2.1 Aims

- Following a review of IMO Resolution MSC.296(87), the structural arrangements to facilitate the provision of adequate lighting in spaces normally occupied or manned by shipboard personnel should be considered.

- A space may be considered as being 'normally occupied' or 'manned' when it is routinely occupied for a period of 20 minutes or more.

- Following a review of IMO Resolution MSC.296(87), the structural arrangements to facilitate the provision of adequate lighting in areas infrequently manned such tanks or closed spaces for periodic inspections, survey and maintenance should be considered.

4.2.2 Application

- The recommendations presented in this section are applicable to vessels covered in SOLAS Regulation II-1/3-10.

4.2.3 Locations

- Locations for lighting in manned spaces should be provided permanently and include the following;

- Living quarters (accommodation, recreation, offices, dining)
- Work Areas (control rooms, bridge, machinery spaces, workshops, offices, and spaces entered on a daily basis)
- Access Areas (corridors, stairways, ramps and the like)

- Lighting in infrequently manned spaces may be temporary and include the following;

- Tanks, small holds, infrequently occupied closed spaces

4.2.4 Structural Arrangements

Allowance should be made for the following ergonomic recommendations during structural design and construction as appropriate.

A) Positioning of Lighting

- Natural lighting through the use of windows and doors should be provided as far as practicable.

- Lights should be positioned, as far as practicable, in the same horizontal plane and arranged symmetrically to produce a uniform level of illumination.

No. 132 (cont)

- Lights should be positioned taking account of air conditioning vents or fans, fire detectors, water sprinklers etc. so the lighting is not blocked by these items.
- Lights should be positioned so as to reduce as far as possible bright spots and shadows.
- Fluorescent tubes should be positioned at right angles to an operator's line of sight while the operator is located at their typical duty station as far as practicable.
- Any physical hazards that provide a risk to operator safety should be appropriately illuminated.
- Lights should be positioned to consider the transfer of heat to adjacent surfaces.
- Lights should not to be positioned in locations which would result in a significant reduction in illumination.
- Lights should not to be positioned in locations that are difficult to reach for bulb replacement or maintenance.

B) Illuminance distribution

- Illumination of the operator task area should be adequate for the type of task, i.e. it should consider the variation in the working plane.
- Sharp contrasts in illumination across an operator task area or working plane should be reduced, as far as possible.
- Sharp contrasts in illumination between an operator task area and the immediate surround and general background should be reduced, as far as possible.
- Where necessary for operational tasks, local illumination should be provided in addition to general lighting.
- Lights should not flicker or produce stroboscopic effects.

C) Obstruction and glare

- Lights should be positioned so as to reduce as far as possible glare or high brightness reflections from working and display surfaces.
- Where necessary, suitable blinds and shading devices may be used to prevent glare.
- Lighting should not to be obstructed by structures such as beams and columns.
- The placement of controls, displays and indicators should consider the position of the lights relative to the operator in their normal working position, with respect to reflections and evenness of lighting.
- Surfaces should have a non-reflective or matt finish in order to reduce the likelihood of indirect glare.

D) Location and installation of lighting controls

- Light switches should be fitted in convenient and safe positions for operators.

No. 132 (cont)

- The mounting height of switches should be such that personnel can reach switches with ease.

E) Location and installation of electrical outlets

- Outlets should be installed where local lighting is provided, for e.g. in accommodation areas, work spaces and internal and external walkways.

- Provision is to be made for temporary lighting where necessary for inspection, survey and maintenance.

4.3 Ventilation Design

4.3.1 Aims

- Following a review of IMO Resolution MSC.296(87), the structural arrangements to facilitate the provision of adequate ventilation in spaces normally occupied or manned by shipboard personnel should be considered.

- A space may be considered as being 'normally occupied' or 'manned' when it is routinely occupied for a period of 20 minutes or more.

- Following a review of IMO Resolution MSC.296(87), the structural arrangements to facilitate the provision of adequate ventilation in areas infrequently manned such tanks or closed spaces for periodic inspections, survey and maintenance should be considered.

4.3.2 Application

- The recommendations presented in this section are applicable to vessels covered in SOLAS Regulation II-1/3-10.

4.3.3 Locations

- Locations for ventilation in manned spaces should be provided permanently and include the following;

- Living quarters (accommodation, recreation, offices, dining)
- Work Areas (control rooms, bridge, machinery spaces, offices, spaces and voids entered)

- Locations for ventilation in infrequently manned spaces should be temporary and include the following;

- Tanks, small holds, infrequently occupied closed/enclosed spaces

4.3.4 Structural Arrangements

Allowance should be made for the following ergonomic recommendations during structural design and construction as appropriate.

A) Ship ventilation design

No. 132 (cont)

- Natural ventilation design should be established by consideration of compartment layouts and specifications. Typical natural ventilation devices include mushroom ventilators, gooseneck ventilators, ventilators with weather proof covers etc.
- In general, HVAC (heating, ventilation and air conditioning) systems should be provided in spaces normally occupied during operation.
- For areas infrequently occupied (such as tanks or holds) means of air quality sampling (such as portable CO_2 densitometer) should be provided.
- Means to ventilate prior to entry of infrequently visited places should be provided.
- Adequate ventilation should be provided for inspection, survey, maintenance and repair within the voids of double-bottom and double-sided hulls.

B) Location and installation of ventilation

- The design of air ducts should facilitate reduced wind resistance and noise. Ductwork (particularly elbows and vents) should not contribute excess noise to a work or living space.
- Ductwork should not to interfere with the use of means of access such as stairs, ladders, walkways or platforms.
- Ductwork and vents should not be positioned to discharge directly on people occupying the room in their nominal working or living locations, for example, directed at a berth, work console, or work bench.
- Manholes and other accesses should be provided for accessibility and ventilation to points within.
- Fire dampers should be applied to contain the spread of fire, per statutory requirements.
- Ventilation penetrations through watertight subdivision bulkheads are not recommended unless accepted per statutory requirements. Ventilation dampers are to be visible (via inspection ports or other means).
- Ventilation fans for cargo spaces should have feeders separate from those for accommodations and machinery spaces.
- It is recommended that air Intakes for ventilation systems are located to minimise the introduction of contaminated air from sources such as for example, exhaust pipes and incinerators.
- Extractor grilles should be located to avoid short-circuits between inlets and outlets and to support even distribution of air throughout a work space.

4.4 Vibration Design

4.4.1 Aims

- Following a review of IMO Resolution MSC.296(87), the structural arrangements to minimize vibration in spaces normally occupied or manned by shipboard personnel should be considered.

No. 132 (cont)

- A space may be considered as being 'normally occupied' or 'manned' when it is routinely occupied for a period of 20 minutes or more.

4.4.2 Application

- The recommendations presented in this section are applicable to vessels covered in SOLAS Regulation II-1/3-10.

4.4.3 Locations

- Locations in which vibration should be minimized include the following;

- Living quarters (accommodation, recreation, offices, dining)
- Work Areas (such as control rooms, bridge, machinery spaces, offices, spaces and voids entered)

4.4.4 Structural Arrangements

Allowance should be made for the following ergonomic recommendations during structural design and construction as appropriate.

A) General

- Vibration levels should be at or below the acceptable ergonomic standards for spaces normally occupied by the crew. In general, ISO 6954:2000 may be used as a guideline to evaluate the vibration performance in the spaces normally occupied by the crew.

- Generally, many alternative measures are applicable to reduce vibration, including but not limited to:

  1 Resonance avoidance with a combination of appropriate selection of main engine and its revolution, number of propeller blades and structural natural frequencies;

  2 To avoid resonance, addition of mass or reduction in scantlings to achieve lower structural natural frequencies. Or conversely, reduction of mass or structural reinforcement to increase natural frequencies;

  3 Reduction of exciting force by for e.g. application of various kinds of dampers, compensators and balancers; and

  4 Structural reinforcement to increase rigidity and reduce structural response, or conversely, where structural rigidity is reduced specifically to reduce structural responses.

- Due to the variety of effective measures that can be taken and the complex nature of vibration phenomena, it is not possible to apply simple prescriptive formulae for scantling calculation.

- Structural measures are mainly prescribed in the following sections, but other measures as stated in 1-4 above may be considered as effective alternatives.

B) Vibration reduction design

- Vibration level in the spaces normally occupied during operation should be estimated by an appropriate method, such as estimation based on empirical statistics and/or

No. 132 (cont)

application of analytical tools. When a vibration level exceeding the acceptable ergonomic standards is envisaged, suitable countermeasures should be taken.

- In general, natural frequencies should be calculated using theoretical formulae in way of local panels and stiffeners in the spaces close to the main exciting sources, i.e. propeller and main engine. These local scantlings should be decided so that the estimated natural frequencies are apart from the exciting frequencies adequately to avoid resonance.

- For heavy equipment or machinery in the spaces close to the main exciting sources, suitable measures should be taken at the deck structure underneath the equipment or machinery to reduce vibration.

C) Anti-vibration design in structural arrangements

- Vibration should be controlled at the source as far as possible.

- To prevent hull girder vibration, the following measures are recommended for consideration;

    - selection of hull forms, girders and other ship structures with consideration to vibration control;
    - selection of main machinery with inertia force and moment balanced;
    - adjusting natural frequency (the natural frequency of hull girder increases as the number of bulkheads increases).

- To prevent vibration of the local structure, the following measures are recommended for consideration;

    - line (mainly the ship tail shape) and propeller design modification;
    - adjustment of general arrangements, such as cabin arrangement, weight distribution, location of main machinery;
    - adjustment and modification of local structures, such as superstructure, aft structures, bottom frame structure in engine room;
    - other damping measures, such as vibration isolators, nozzle propeller.

D) Anti-vibration design of engine room, engine, propeller and thrusters

- Consideration should be paid to the vibration response of main machinery base and shafting.

- Consideration of control of vibration from the engine room should include installing bracings at the top and front of diesel engines and increasing the stiffness and natural frequency of the machine base to reduce the vibration of the base.

- Bow thruster induced vibration should be minimized by following good acoustic design practices relative to the design of the propeller and the location and placement of the thruster itself. Supply of resilient supported tunnels (tunnel within a tunnel), bubbly air injectors, and tunnels coated with a decoupling material can be considered.

- Propeller induced vibration should be minimized by following good acoustic design practices relative to the design of the propeller and the location and placement in relation to the hull.

No. 132 (cont)

Stern shape should be optimized and considered through theoretical calculation and model testing so as to improve the wake. The gap between the shell and the propeller should be appropriate to reduce the exciting force. Damping treatments can be applied to shell plates with severe vibration.

E) Anti-vibration design of superstructure

- Preventing vibration along the longitudinal area of the superstructure should be considered by increasing the shear and strut stiffness of the superstructure. To achieve this, the following measures are recommended;
    - Superstructure side wall can be vertically aligned,
    - The internal longitudinal bulkhead can be set up with more than four (4) tiers of superstructure,
    - Strong girders or other strong elements can be provided under the main deck,
    - The transverse bulkhead and the front bulkhead of superstructure can be vertically aligned as much as possible, otherwise large connection brackets should be provided,
    - The superstructure aft bulkhead of each superstructure deck can be aligned vertically with the main hull transverse bulkheads as far as possible, otherwise strong beams under the main deck should be provided.
    - To control vibration of outfitting, dimensions and the means of fixing and strengthening at the point of mounting can be considered.
    - To prevent vibration of high web girder, the following should be considered;
        - Increase dimension of longitudinals and face plate,
        - Increase the stiffness of face plate stiffeners,
        - Add horizontal stiffener.

F) Anti-vibration installation design

- Sources of vibration (engines, fans, rotating equipment), to the extent possible, should be isolated from work and living spaces (use of isolation mounts or other means can be considered).

- Hull borne vibration in living and work areas can be attenuated by the provision of vibration absorbing deck coverings or by other means.

4.5 Noise Design

4.5.1 Aims

- Following a review of IMO Res. MSC.337(91) Code on Noise Levels On Board Ships, the structural arrangements to minimize noise in spaces normally occupied or manned by shipboard personnel should be considered.

- A space may be considered as being 'normally occupied' or 'manned' when it is routinely occupied for a period of 20 minutes or more.

4.5.2 Application

- The recommendations presented in this section are applicable to vessels covered by SOLAS Regulation II-1/3-10.

No. 132 (cont)

4.5.3 Locations

- Locations in which noise should be minimized include the following;

- Living quarters (accommodation, recreation, offices, dining)
- Work Areas (such as control rooms, bridge, machinery spaces, living quarters and offices)

4.5.4 Structural Arrangements

Allowance should be made for the following ergonomic recommendations during structural design and construction as appropriate.

A) General

- Sources of noise (engines, fans, rotating equipment), to the extent possible, should be isolated and located away from work and living spaces (through use of isolation mounts or other means).

- If necessary hull borne noise transmitted through the steel structure may be attenuated by the provision of noise absorbing deck coverings.

- Noise for typical underway conditions should be specified for the following areas:

    - In living quarters
    - In open engineering and mechanical spaces
    - In offices, the bridge, engineering offices

- Noise on the hull from the propeller tips, athwart thrusters, or azipods should be designed to minimize structure borne noise to accommodations and work areas.

- Specific noise levels are to be obtained from the revised IMO Code on Noise Aboard ships (Resolution MSC.337(91)).

- To reduce noise transmitted to accommodation cabins, the crew accommodations areas are usually arranged in the middle or rear of the superstructure or on the poop deck and above.

B) Noise sources and propagation

- Ship noise can be divided into airborne noise and structure borne noise according to the nature of the sound source. It consists of main machinery noise, auxiliary machinery noise, propeller noise, hull vibration noise and ventilation system noise.

- There are three main routes of transmission of ship noise;

    - airborne noise radiated directly to the air by main or auxiliary machinery system;
    - structure borne noise spread along the hull structure through mechanical vibration and radiated outward;
    - fan noise and air-flow noise transmitted through the pipeline of the ventilation system.

C) Mechanical vibration induced noise control

No. 132 (cont)

- Mechanical vibrations are the largest source of noise. Methods relating to anti-vibration design in the structural arrangements are also useful for vibration induced noise control, including the following;

- Reducing the noise level of the various noise sources;
- Using vibration isolator for main and auxiliary machinery to reduce the noise;
- Improving the machine's static and dynamic balance;
- Installing soundproof cover with sound-absorbing lining for machines.

D) Noise control of ventilation system

- Fans with relative low pressure may be used to reduce noise when the flow resistance of ventilation ducts is low. Low flow resistance can be achieved by rational division of the ventilation system, reasonable determination of ability of ventilation and the ducts layout, adoption of reasonable duct type and provision of suitable materials.

- Fans and central air conditioners may be installed in a separate acoustic room or the damper elastomeric gasket or silencer box.

- Ventilation ducts can be encased in damping material if necessary. Penetration of compartments with a low-noise requirement by main air tubes may be avoided.

- Ventilation inlet, outlet, and diffuser elements can be provided that are designed for noise abatement to reduce ventilation terminal noise.

- If needed, an appropriate muffler can be used based on the estimated frequency range of the noise.

E) Noise Prevention/Mitigation

- The statements that follow should be considered in the context of the prevention and mitigation of human whole body vibration, which also have a noise reducing effect.

- Different treatments may be needed to reduce airborne sources, structureborne sources, airborne paths, structureborne paths, HVAC induced noise, etc. Each treatment type depends on an understanding of the prevailing airborne or structureborne noise components (e.g., low frequency or high frequency). A thorough understanding of the source, amount of noise, the noise's components, and the noise's path(s) is essential for cost effective noise abatement/treatment. Listed below, are summarized some of the more common noise control treatment methods,

    - Selection of equipment that by its design or quality are lower noise and/or vibration.
    - Reduction of vibration by mechanically isolating machinery from supporting structure.
    - Use of two layers of vibration isolation mounts under machinery with seismic based mounts between the machinery and the ship's structure.
    - Reduce vibration energy in structures. Pumpable material used as ballast can also be used as damping in voids and tanks.
    - An air bubble curtain can be considered to shield the vessel's hull from water borne noise.
    - A decoupling material can be applied to the exterior (wet side) plating in order to reduce the radiation efficiency of the structure.

No. 132 (cont)

- The airborne source level and airborne path are the most critical factors affecting noise within a machinery space itself and in the compartments directly adjacent to the machinery space. Structureborne sources and the structureborne path carry acoustical energy everywhere else on the vessel.

- Depending on the level of treatment, secondary structureborne noise (a combination of the airborne source level and the response of the structure inside the machinery space itself) may also be important in spaces remote from the machinery itself.

F) Noise modelling

- A technique becoming more common among designers is noise or acoustical modelling. In these models, it is essential that the factors related to the source-path receiver be very well understood.

- Noise/acoustical models should include the following components:

  - Source, acoustic path, and receiver space description
  - Sources - machinery source descriptions (e.g., noise and vibration levels, size and mass, location, and foundation parameters)
  - Sources - propulsor source description (e.g., number of propellers (impellers), number of blades, RPM, clearance between hull and tips of propeller, vessel design speed)
  - Sources – HVAC source description (e.g., fan parameters (flow rate, power, and pressure), duct parameter, louver geometry, and receiver room sound absorption quality)
  - Path - Essential parameters for sound path description include hull structure sizes and materials, (damping) loss factors, insulation and joiner panel parameters.
  - Receiver - Receiver space modelling is characterized by the hull structure forming the compartment of interest, insulation/coatings, and joiner panels.

4.6 Access & Egress Design

4.6.1 Aims

- Following a review of IMO Resolution MSC.296(87), the design of stairs, vertical ladders, ramps, walkways and work platforms used for permanent means of access and/or for inspection and maintenance operations should be considered.

- Following a review of IMO Resolution MSC.296(87), the structural arrangements to facilitate emergency egress of inspection personnel or ships' crew from tanks, holds, voids etc. is to be considered.

4.6.2 Application

- The recommendations presented in this section are applicable to vessels covered in SOLAS Regulation II-1/3-10.

4.6.3 Locations

- Locations for provision of access aids in manned spaces should be provided permanently and include the following;

- Living quarters (accommodation, recreation, offices, dining)

No. 132 (cont)

- Work Areas (control rooms, bridge, machinery spaces, offices, spaces and voids entered)
- Access to deck areas, muster stations, work platforms associated to periodic inspection, operation, or maintenance
- Locations for access in infrequently manned spaces may be temporary and include the following;
  - Tanks, small holds, infrequently occupied closed spaces

4.6.4 Structural Arrangements

A) Stairs

General Principles

The following are general recommendations to consider for stairs design:

- Stairs are appropriate means for changing from one walking surface to another when the change in vertical elevation is greater than 600 mm (23.5 in.).
- Stairs should be provided in lieu of ladders or ramps in accommodations spaces, office spaces, or to the navigation bridge.
- The angle of inclination should be sufficient to provide the riser height and tread depth that follows, a minimum angle of 38 degrees and maximum angle of 45 degrees is recommended.
- Stairs exposed to the elements should have additional slip resistance due to potential exposure to water and ice.
- Stairs should be used in living quarters instead of inclined ladders.
- No impediments or tripping hazards should intrude into the climbing spaces of stairs (for example, electrical boxes, valves, actuators, or piping).
- No impediments or tripping hazards should impede access to stair landings (for example, piping runs over the landing or coamings/retention barriers).
- Stairs running fore and aft in a ship are preferable but athwartship stairs are allowed.

Stair Landings

The following are recommendations to consider during the design of stair landings:

- A clear landing at least as wide as the tread width and a minimum of 915 mm (36 in.) long should be provided at the top and bottom of each stairway.
- An intermediate landing should be provided at each deck level serviced by a stair, or a maximum of every 3500 mm (140 in.) of vertical travel for stairs with a vertical rise of 6100 mm (240 in.).
- Any change of direction in a stairway should be accomplished by means of an intermediate landing at least as wide as the tread width and a minimum of 915 mm (36 in.) long.
- Stairways should have a maximum angle of inclination from the horizontal of 45 degrees.
- Where stairs change directions, intermediate landings along paths for evacuating personnel on stretchers should be 1525 mm (60 in.) or greater in length to accommodate rotating the stretcher.

Stair Risers and Treads

The following are recommendations to consider during the design of stair risers and treads:

No. 132 (cont)

- A riser height should be no more than 230 mm (9 in.) and a tread depth of 280 mm (11 in.), including a 25 mm (1 in.) tread nosing (step overhang).
- For stairs the depth of the tread and the height of riser should be consistent
- Minimum tread width on one-way (where there is expected to be only one person transiting, ascending *or* descending stairway) stairs should be at least 700 mm (27.5 in.)
- Minimum tread width on two-way (where there may be two persons, ascending *and* descending, or passing in opposite directions) stairs should be at least 900 mm (35.5 in.)
- Once a minimum tread width has been established at any deck in that stair run, it should not decrease in the direction of egress
- Nosings should have a non-slip/skid surface that should have a coefficient of friction (COF) of 0.6 or greater measured when wet.

Headroom

- Clear headroom (free height) maintained in all stairs is recommended to be at least 2130 mm (84 in.).

Design Load

- It is recommended that stairways should be built to carry five times the normal anticipated live load, but less than a 544-kg (1000-lb) moving concentrated load.

Stair Handrails

The following are recommendations to consider during the design of stair risers and treads:

- Stairs with three or more steps should be provided with handrails.
- A single-tier handrail to maintain balance while going up or down the stairs should be installed on the bulkhead side(s) of stairs.
- A two-tier handrail to maintain balance and prevent falls from stairs should be installed on non-enclosed sides of stairs.
- Handrails should be constructed with a circular cross section with a diameter of 40 mm (1.5 in.) to 50 mm (2.0 in.).
- Square or rectangular handrails should not be fitted to stairs.
- The height of single tier handrails should be 915 mm (36 in.) to 1000 mm (39 in.) from the top of the top rail to the surface of the tread.
- Two-tier handrails should be two equally-spaced courses of rail with the vertical height of the top of the top rail 915 mm (36 in.) to 1000 mm (39 in.) above the tread at its nosing.
- A minimum clearance of 75 mm (3 in.) should be provided between the handrail and bulkhead or other obstruction.

B) Walkways and Ramps

General Principles

The following are general recommendations to consider for walkways and ramps:

- Guard rails should be provided at the exposed side of any walking or standing surface that is 600 mm (23.5 in.) or higher above the adjacent surface and where a person could fall from the upper to the lower surface.
- Ramps should be used with changes in vertical elevations of less than 600 mm (23.5 in.).

No. 132 (cont)

- Ramps should be provided with a non-skid surface that should have a coefficient of friction (COF) of 0.6 or greater measured when wet.
- Headroom in all walkways should be ≥ 2130 mm (84 in.).
- Toeboards should be provided on elevated walkways, platforms, and ramps. No impediments or tripping hazards should intrude into the transit space (for example, electrical boxes, valves, actuators, or piping).
- No impediments or tripping hazards should impede use of a walkway or ramp (for example, piping runs, hatch covers, deck impediments (e.g., through bolts) or combings/retention barriers).
- The maximum opening in a walkway grating under which the presence of persons is expected should be less than 22 mm (0.9 in.).
- The maximum opening in a walkway grating under which the presence of persons is not expected should be less than 35 mm (1.7 in.).
- Toeboards should have a height of 100 mm (4.0 in.) and have no more than a 6 mm (0.25 in.) clearance between the bottom edge of the toeboard and the walking surface.

C) Vertical Ladders

General Principles

The following are general recommendations to consider for the design of vertical ladders:

- Vertical ladders should be provided whenever operators or maintainers must change elevation abruptly by more than 300 mm (12.0 in.).
- Vertical ladders should not be located within 1.83 m (6 ft.) of other nearby potential fall points (including the deck edge, cargo holds and lower decks) without additional fall protection, such as guardrails.
- Vertical ladders should be provided with skid/slip resistant on the rungs that should have a coefficient of friction (COF) of 0.6 or greater measured when wet.
- The angle of inclination for vertical ladders should be 80 to 90 degrees.
- Permanent vertical ladders should be attached to a permanent structure.
- The maximum distance from the ladder's centreline to any object that must be reached by personnel from the ladder should not exceed 965 mm (38.0 in.).
- Vertical ladders should be located so as not to interfere with the opening and closing of hatches, doors, gratings, or other types of access.
- No impediments should intrude into the climbing space (for examples, electrical boxes, valves, actuators, or piping).
- Overhead clearance above vertical ladder platforms should be a minimum of 2130 mm (84.0 in.)
- There should be at least 750 mm (29.5 in.) clearance in front of the ladder (climbing space).
- There should be between 175 mm (7.0 in.) to 200 mm (8.0 in.) clearance behind the ladder (toe space).
- A means of access to a cellular cargo space should be provided using staggered lengths of ladder. No single length is to exceed 6.0 m (91.5 ft) in length.

Rung Design

- Rungs should be equally spaced along the entire height of the ladder.
- If square bar is used for the rung, it should be fitted to form a horizontal step with the edges pointing upward.
- Rungs should also be carried through the side stringers and attached by double continuous welding.
- Ladder rungs should be arranged so a rung is aligned with any platform or deck that an operator or maintainer will be stepping to or from.

No. 132 (cont)

- Ladder rungs should be slip resistant or of grid/mesh construction.

Provision of Platforms

- When the height of a vertical ladder exceeds 6.0 m (19.5 ft), an intermediate or linking platform should be used.
- If a work task requires the use of two hands, working from a vertical ladder is not appropriate. The work area should be provided with a work platform that provides a flat, stable standing surface.

Vertical ladders as Means of Access

- Where vertical ladders lead to manholes or passageways, horizontal or vertical handles or grab bars should be provided. Handrails or grab bars should extend at least 1070 mm (42.0 in.) above the landing platform or access/egress level served by the ladder.

Safety Cages

- Safety cages should be used on vertical ladders over 4.5 m (15.0 ft) in height.
- Climber safety rails or cables should be used on vertical ladders in excess of 6.1 m (20.0 ft).

D) Work Platforms

General Principles

- Work platforms should be provided at locations where personnel must perform tasks that cannot be easily accomplished by reaching from an existing standing surface.
- Work platforms exposed to the elements should have additional slip resistance due to potential exposure to water and ice.
- Work platforms more than 600 mm (23.5 in.) above the surrounding surface should be provided with guard rails and hand rails.
    - Work platforms should be of sufficient size to accommodate the task and allow for placement of any required tools, spare parts or equipment.

E) Egress

- Doors, hatches, or scuttles used as a means of escape should be capable of being operated by one person, from either side, in both light and dark conditions. Doors should be designed to prevent opening and closing due to vessel motion and should be operable with one hand.
- Doors (other than emergency exit) used solely by crew members should have a clear opening width of at least 710 mm (28 in.) The distance from the deck to the top of the door should be at least 1980 mm (78 in.).
- The method of opening a means of escape should not require the use of keys or tools. Doors in accommodation spaces (with the exception of staterooms), stairways, stair towers, passageways, or control spaces, should open in the direction of escape or exit.
- The means of escape should be marked from both the inside and outside.
- Deck scuttles that serve as a means of escape should be fitted with a release mechanism that does not require use of a key or a tool, and should have a holdback device to hold the scuttle in an open position.
  Deck scuttles that serve as a means of escape should have the following dimensions:
  i) Round – 670 mm (26.5 in.) or greater in diameter
  ii) Rectangular – 670 mm (26.5 in.) by 330 mm (13 in.) or greater

No. 132 (cont)

Annex A - Recommended Measurement Values

1.1 General

The recommendations in the following section outline measurement values for lighting, ventilation, vibration and access from a best practice ergonomics perspective. The information provided can assist designers when applying structural arrangement guidance.

See the IMO Code on Noise Aboard ships (IMO Resolution MSC.337(91)) for recommended shipboard noise levels guidance.

1.2 Lighting

The following tables give details of recommended illuminance levels in Lux which support task performance, safety and visual comfort for the operator. Emergency lighting is covered in SOLAS and IMO Resolutions and has not been considered in the below table. Lighting measurements should be made with the probe approximately 800 mm (32 inches).

No. 132 (cont)

Table 1 - Lighting for Crew Accommodations Spaces

Space	*Illuminance Level in Lux*	*Space*	*Illuminance Level in Lux*
Entrances and Passageways			
Interior Walkways, Passageways, Stairways and Access Ways	100	Exterior Walkways, Passageways, Stairways and Access Ways (night)	100
Corridors in Living quarters and work areas	100	Stairs, escalators	150
		Muster Area	200
Cabins, Staterooms, Berthing and Sanitary Spaces*			
General Lighting	150	Bath/Showers (General Lighting)	200
Reading and Writing (Desk or Bunk Light)	500	All other Areas within Sanitary Space (e.g., Toilets)	200
Mirrors (Personal Grooming)	500	Light during sleep periods	<30
Dining Spaces			
Mess Room and Cafeteria	300	Snack or Coffee Area	150
Recreation Spaces			
Lounges	200	Gymnasiums	300
Library	500	Bulletin Boards/Display Areas	150
Multimedia Resource Centre	300	All other Recreation Spaces (e.g., Game Rooms)	200
TV Room	150	Training/Transit Room Office/Meeting rooms	500
Medical, Dental and First Aid Centre			
Dispensary Hospital/ward	500	Wards - General Lighting - Critical Examination - Reading Hospital/ward	 150 500 300 500
Medical and Dental Treatment/ Examination Room Hospital/ward	500		
Medical Waiting Areas	200		
Laboratories	500	Other Medical & Dental Spaces	300
*Note: If there is any opportunity for light to enter cabins or staterooms at the times of day or night when people sleep (e.g., portlights, transoms, etc.), the maximum lighting levels should be 30 Lux.			

No. 132 (cont)

Table 2 - Lighting for Navigation and Control Spaces

Space	*Illuminance Level in Lux*	*Space*	*Illuminance Level in Lux*
Wheelhouse, Pilothouse, Bridge	300	Offices - General Lighting - Computer Work - Service Counters	 300 300 300
Chart Room - General Lighting - On Chart Table	 150 500		
Other Control Rooms (e.g., Cargo Transfer etc.) - General Lighting - Computer Work Central Control Room	 300 300 500	Control Stations - General Lighting - Control Consoles and Boards, Panels, Instruments - Switchboards - Log Desk Local Instrument room	 300 300 500 500 400
Radar Room	200		
Radio Room	300	Gyro Room	200

Table 3 - Lighting for Service Spaces

Space	*Illuminance Level in Lux*	*Space*	*Illuminance Level in Lux*
Food Preparation - General Lighting - Galley - Pantry - Butcher Shop - Thaw Room - Working Surfaces, Food Preparation Counter and Range Tops - Food Serving Lines - Scullery (Dishwashing) - Extract Hood Store rooms Package handling/cutting	 500 500 300 500 300 750 300 300 500 100 300	Laundries - General Lighting - Machine, Pressing, Finishing and Sorting	 300 300
		Chemical Storage	300
		Storerooms - Large Parts - Small Parts - Issue Counters	 200 300 300
		Elevators	150
		Food Storage - Non-refrigerated - Refrigerated	 200 100
Mail Sorting	500		

No. 132 (cont)

Table 4 - Lighting for Operating and Maintenance Spaces/Areas

Space	*Illuminance Level in Lux*	*Space*	*Illuminance Level in Lux*
Machinery Spaces (General) Unmanned Machinery spaces	200 200		
Engine Room	300	Cargo Holds (Portable Lighting) - General Lighting - During Cargo Handling - Passageways and Trunks	 30 300 80
Generator and Switchboard Room Switchboard, transformer room Main generator room/switch gear	300 500 200		
Fan Room HVAC room	200 200	Inspection and Repair Tasks - Rough - Medium - Fine - Extra Fine	 300 500 750 1000
Motor Room	300		
Motor-Generator Room (Cargo Handling)	150		
Pump Room, Fire pump room Steering Gear Room Windlass Rooms Battery Room Emergency Generator Room Boiler Rooms	200 200 200 200 200 100	Workshops Paint Shop Workshop office Mechanical workshop Inst/Electrical Workshop	300 750 500 500 500
Bilge/Void Spaces	75		
Muster/Embarkation Area	200	Unmanned Machinery Room	200
		Shaft Alley	100
Cargo Handling (Weather Decks) Lay Down Area General Process and Utility area Loading ramps/bays	200 200 200 200	Escape Trunks	50
		Crane Cabin	400
Cargo Storage and Manoeuvring areas	350	Hand signalling areas between crane shack and ship deck	300

No. 132 (cont)

Table 5 - Lighting for Red or Low-level White Illuminance

Area	*Illuminance Level in Lux*
Where seeing is essential for charts and instruments	1 to 20
Interiors or Spaces	5 to 20
Bridge Areas (including chart tables, obstacles and adjacent corridors and spaces)	0 to 20 (Continuously Variable)
Stairways	5 to 20
Corridors	5 to 20
Repair Work (with smaller to larger size detail)	5 to 55

Brightness (Adopted from DOT/FAA/CT-96/1 - Human Factors Design Guide).

The following table recommends the brightness ratio between the lightest and darkest areas or between a task area and its surroundings.

Table 6 - Recommended Maximum Brightness Ratios

	Environmental Classification		
Comparison	A	B	C
Between lighter surfaces and darker surfaces within the task	5 to 1	5 to 1	5 to 1
Between tasks and adjacent darker surroundings	3 to 1	3 to 1	5 to 1
Between tasks and adjacent lighter surroundings	1 to 3	1 to 3	1 to 5
Between tasks and more remote darker surfaces	10 to 1	20 to 1	b
Between tasks and more remote lighter surfaces	1 to 10	1 to 20	b
Between luminaries and adjacent surfaces	20 to 1	b	b
Between the immediate work area and the rest of the environment	40 to 1	b	b

Environmental Classification Notes:

A Interior areas where reflectances of entire space can be controlled for optimum visual conditions.

B Areas where reflectances of nearby work can be controlled, but there is only limited control over remote surroundings.

C Areas (indoor and outdoor) where it is completely impractical to control reflectances and difficult to alter environmental conditions.

b Brightness ratio control is not practical.

No. 132 (cont)

1.3 Ventilation

- Thermal comfort varies among individuals as it is determined by individual differences. Individually, perception of thermal comfort is largely determined by the interaction of thermal environmental factors such as air temperature, air velocity, relative humidity, and factors related to activity and clothing.

- The Heating, Ventilation and Air-Conditioning (HVAC) systems onboard a vessel should be designed to effectively control the indoor thermal environmental factors to facilitate the comfort of the crew.

- The following are a set of ergonomic recommendations that aim to achieve operator satisfaction from a thermal comfort perspective.

A) Recommended Air temperature

- A Heating, Ventilation, and Air Conditioning (HVAC) system should be adjustable, and temperatures should be maintained by a temperature controller. The preferred means would be for each manned space to have its own individual thermostat for temperature regulation and dehumidification purpose.

- International Standards recommend different bands for a HVAC system, but there is little difference in the minimum and maximum values they stipulate. A band width between 18°C (64°F) and 27°C (80°F) accommodates the optimum temperature range for indoor thermal comfort.

B) Recommended Relative humidity

- A HVAC system should be capable of providing and maintaining a relative humidity within a range from 30% minimum to 70% maximum with 40 to 45% preferred.

C) Enclosed space vertical gradient recommendation

- The difference in temperature at 100 mm (4 in.) above the deck and 1700 mm (67 in.) above the deck should be maintained with 3°C (6°F).

D) Recommended Air velocity

- Air velocities should not exceed 30 metres-per-minute or 100 feet-per-minute (0.5 m/s or 1.7 ft/s) at the measurement position in the space.

E) Berthing Horizontal Temperature Gradient

- In berthing areas, the difference between the inside bulkhead surface temperature adjacent to the berthing and the average air temperature within the space should be less than 10°C (18°F).

F) Air exchange rate

- The rate of air exchange for enclosed spaces should be at least six (6) complete changes-per-hour.

No. 132 (cont)

Summary of Indoor Climate Recommendations

Item	*Recommendation or Criterion*
Air Temperature	18 to 27°C (68 to 77°F)
Relative Humidity	The HVAC system should be capable of providing and maintaining a relative humidity within a range from 30% minimum to 70% maximum
Vertical Gradient	The acceptable range is 0 – 3°C (0 – 6°F)
Air Velocity	Not exceed 30 meters-per-minute or 100 feet-per-minute
Horizontal Gradient (Berthing areas)	The horizontal temperature gradient in berthing areas should be <10°C (18°F)
Air Exchange Rate	The rate of air change for enclosed spaces should be at least six (6) complete changes-per-hour

1.4 Vibration

- Vibration comfort varies among individuals as it is determined by individual differences. Individually, perception of vibration comfort is determined by the magnitudes and frequencies of those vibrations.

- The following are recommendations aiming to control levels of whole body vibration exposure that are generally not considered to be uncomfortable, and these are based on the recommendations of ISO 6954 (2000).

- The following levels of whole body vibrations should not be exceeded when measured in three axes (x, y, and z) using the w weighting scale (whole body, as discussed in ISO 6954:2000) with a band limitation in all axes limited from 1 to 80 hz.

Maximum RMS vibration levels	
Accommodations Areas	Workspaces
180 mm/second^2 (5 mm/s)	215 mm/second^2 (6 mm/s)

1.5 Access

- The following provide further ergonomic guidance on access arrangements to support the recommendations given in Section 4.6 Access & Egress Design, with a view to covering wider scope than those covered by the mandatory requirements such as SOLAS Regulation II-1/3-6 and IACS UI SC191.

- The measurements hereunder are based on one of recognised practices for ergonomic design with a view to providing general guidance to cover not only means of access for inspections but also means of access for operation. Therefore, they are not necessarily identical to those specified in the mandatory requirements.

No. 132 (cont)

Stair Handrail

In addition to the recommendations for Stair Handrails presented in Section 4.6 Access & Egress Design, the following recommended dimensions relating to the design of Stair Handrails are presented in the following table. Stairs with three or more steps should be provided with handrails.

Stair Handrail Arrangements

Arrangement	*Handrail Recommendation*
1120 mm (44 in.) or wider stair with bulkhead on both sides	Single tier handrail on both sides
Less than 1120 mm (44 in.) stair width with bulkhead on both sides	Single tier handrail on one side, preferably on the right side descending
1120 mm (44 in.) or wider stair, one side exposed, one with bulkhead	Two tier handrail on exposed side, single tier on bulkhead side
Less than 1120 mm (44 in.) stair width, one side exposed, one with bulkhead	Two tier handrail on exposed side
All widths, both sides of stairs exposed	Two tier handrail on both sides

No. 132 (cont)

Walkway and Ramp Design

In addition to the recommendations for Walkway Design presented in Section 4.6 Access & Egress Design, the following recommended dimensions relating to the design of walkways and ramps are presented in Figure 1 'Walkway and Ramp Design'.

Figure 1 Walkway and Ramp Design

Dimension		*Recommendations*
A	Walkway width – one person[2]	≥ 710 mm (28 in.)
	Walkway width – two-way passage, or means of access or egress to an entrance	≥ 915 mm (36 in.)
	Walkway width – emergency egress, unobstructed width	≥ 1120 mm (44 in.)
B	Distance behind handrail and any obstruction	≥ 75 mm (3.0 in.)
C	Gaps between two handrail sections or other structural members	≤ 50 mm (2.0 in.)
D	Span between two handrail stanchions	≤ 2.4 m (8 ft)
E	Outside diameter of handrail	≥ 40 mm (1.5 in.) ≤ 50 mm (2.0 in.)
F	Height of handrail	1070 mm (42.0 in.)
G	Height of intermediate rail	500 mm (19.5 in.)
H	Maximum distance between the adjacent stanchions across handrail gaps	≤ 350 mm (14.0 in.)
I	Distance below any covered overhead structure or obstruction	≥ 2130 mm (84 in.)
Θ	Ramp angle of inclination – unaided materials handling	≤ 5 degrees
	Ramp angle of inclination – personnel walkway	≤ 15 degrees

Notes:
1 Toeboard omitted for clarity
2 The walkway width may be diminished to ≥ 500 mm around a walkway structure web frames

■

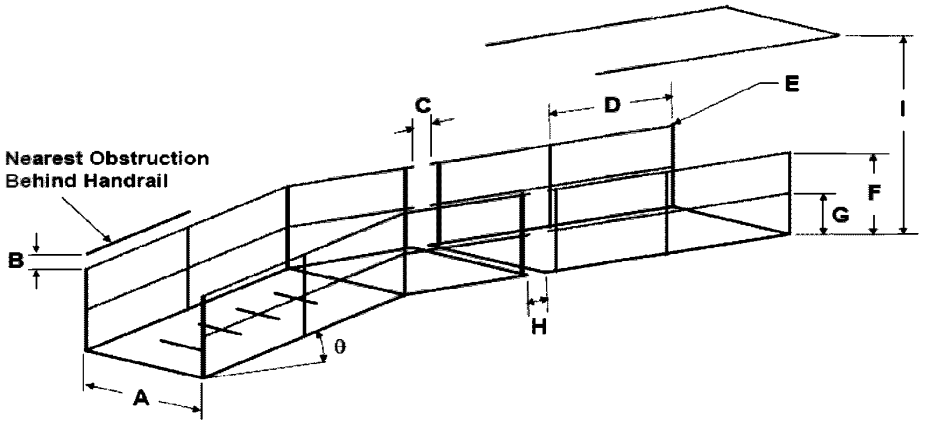

No. 132 (cont)

Vertical Ladder Design and Dimensions

In addition to the recommendations for Vertical Ladders presented in Section 4.6 Access & Egress Design, the following recommended dimensions relating to the design of Ladders are presented in Figure 2 to Figure 5.

- Figure 2 – Vertical Ladders (General Criteria)
- Figure 3 – Staggered Vertical Ladders
- Figure 4 – Vertical Ladders to Landings (Side Mount)
- Figure 5 – Vertical Ladders to Landings (Ladder through Platform)

Figure 2 Vertical Ladders (General Criteria)

	Dimension	*Recommendation*
A	Overhead Clearance	2130 mm (84.0 in.)
B	Ladder distance (gap accommodating toe space) from surface (at 90 degrees)	≥ 175 mm (7.0 in.) ≤ 200 mm (8.0 in.)
C	Horizontal Clearance (from ladder face and obstacles)	≥ 750 mm (29.5 in.) or ≥ 600 mm (23.5 in.) (in way of openings)
D	Distance between ladder attachments / securing devices	≤ 2.5 m (8.0 ft)
E	Ladder angle of inclination from the horizontal	80 to 90 degrees
F	Rung Design – (Can be round or square bar; where square bar is fitted, orientation should be edge up)	Square bar 25 mm (1.0 in.) x 25 mm (1.0 in.) Round bar 25 mm (1.0 in.) diameter
G	Distance between ladder rungs (rungs evenly spaced throughout the full run of the ladder)	≥ 275 mm (11.0 in.) ≤ 300 mm (12.0 in.)
H	Skew angle	≤ 2 degrees
I	Stringer separation	400 to 450 mm (16.0 to 18.0 in.)
J	Ladder height: Ladders over 6 m (19.7 ft) require intermediate/linking platforms)	≤ 6.0 m (19.5 ft)

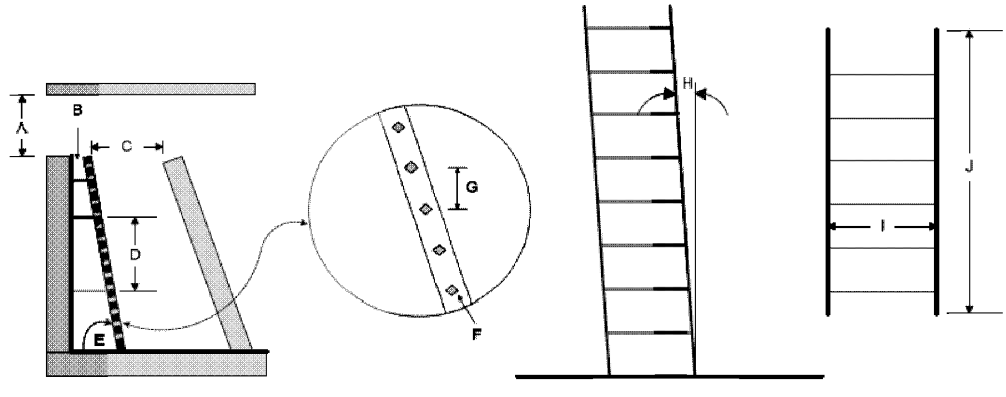

No. 132 (cont)

Figure 3 Staggered Vertical Ladders

Dimension		*Recommendation*
A	Stringer separation	400 to 450 mm (16.0 to 18.0 in.)
B	Horizontal separation between two vertical ladders, stringer to stringer	≥ 225 mm (9 in.) ≤ 450 mm (18 in.)
C	Distance between ladder rungs (rungs evenly spaced throughout the full run of the ladder)	≥ 275 mm (11.0 in.) ≤ 300 mm (12.0 in.)
D	Stringer height above landing or intermediate platform	≥ 1350 mm (53.0 in.)
E	Rung design – (Can be round or square bar; where square bar is fitted, orientation should be edge up)	Square bar 22 mm (0.9 in.) x 22 mm (0.9 in.) Round bar 25 mm (1.0 in.) diameter
F	Horizontal separation between ladder and platform	≥ 150 mm (6.0 in.) ≤ 300 mm (12.0 in.)
G	Landing or intermediate platform width	≥ 925 mm (36.5 in.)
H	Platform ladder to Platform ledge	≥ 75 mm (3.0 in.) ≤ 150 mm (6.0 in.)

*Note: Left side guardrail of platform omitted for clarity.

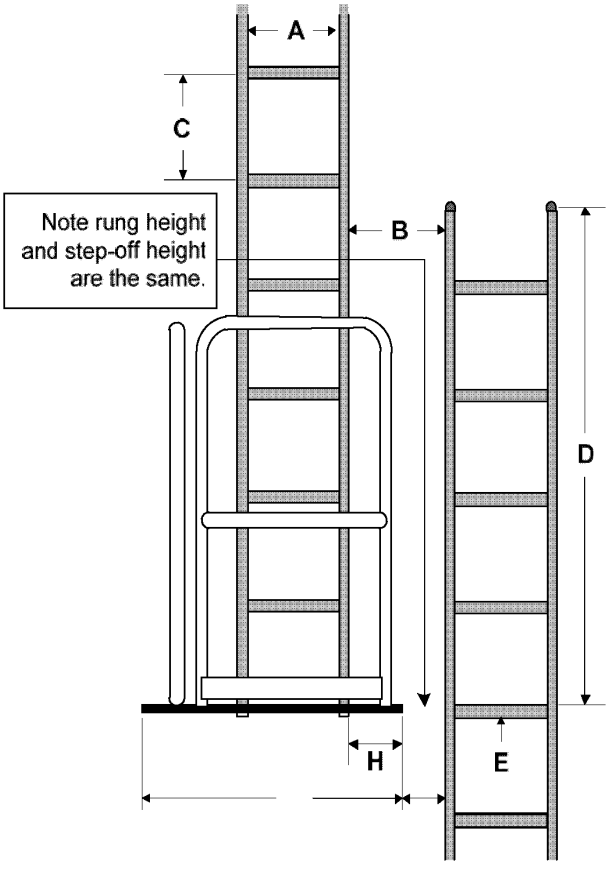

No. 132 (cont)

Figure 4 Vertical Ladders to Landings (Side Mount)*

Dimension		*Recommendation*
A	Platform depth	≥ 750 mm (29.5 in.)
B	Platform width	≥ 925 mm (36.5 in.)
C	Ladder distance from surface	≥ 175 mm (7.0 in.)
D	Horizontal separation between ladder and platform	≥ 150 mm (6.0 in.) and ≤ 300 mm (12.0 in.)

* Notes: Top view. Guardrails/Handrails not shown.

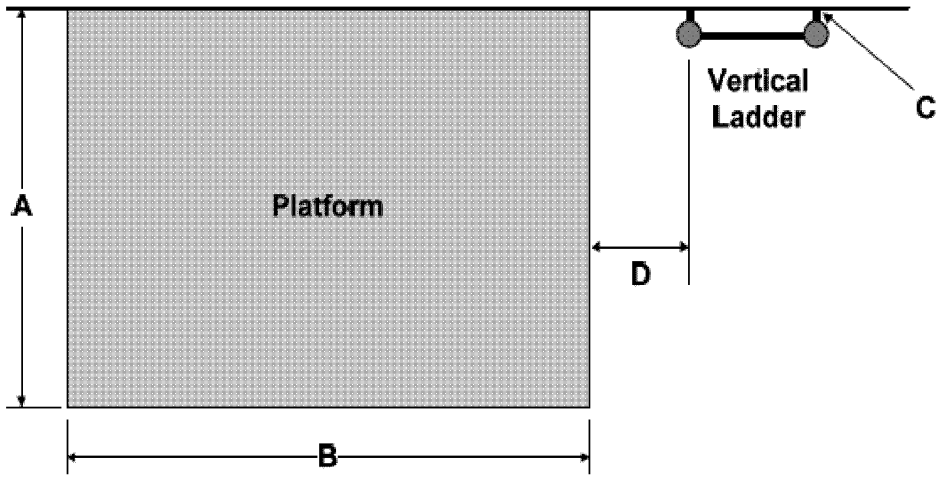

No. 132 (cont)

Figure 5 Vertical Ladders to Landings (Ladder through Platform)*

Dimension		*Recommendation*
A	Vertical ladder opening	≥ 750 mm (29.5 in.)
B	Distance from front of vertical ladder to back of platform opening	≥ 750 mm (29.5 in.)
C	Minimum clear standing area in front of ladder opening – Depth	≥ 750 mm (29.5 in.)
D	Minimum clear standing area in front of ladder opening – Width	≥ 925 mm (36.5 in.)
E	Additional platform width for intermediate landing (where present)	≥ 925 mm (36.5 in.)
F	Horizontal separation between ladder and platform	≥ 150 mm (6.0 in.) and ≤ 300 mm (12.0 in.)

*Notes: Top view. Guardrails/Handrails not shown.

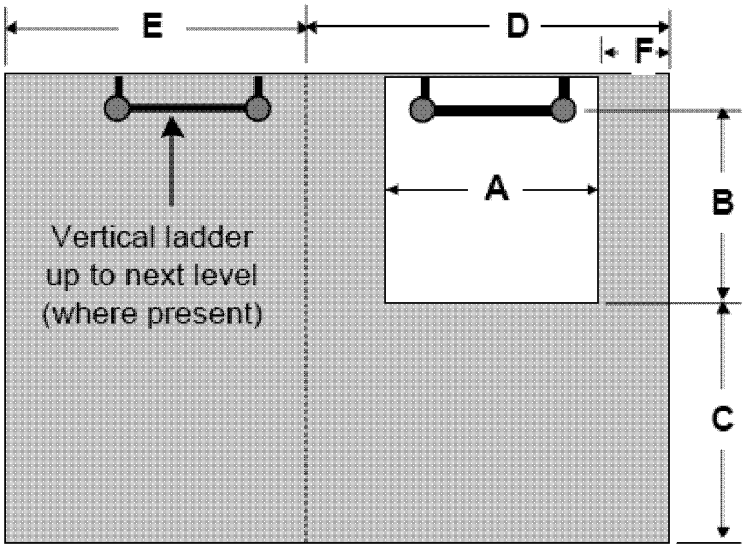

No. 132 (cont)

Work Platform

In addition to the recommendations for Work Platforms presented in Section 4.6 Access & Egress Design, the following recommended dimensions relating to the design of Work Platforms are presented in Figure 6 'Work Platform Dimensions'.

Figure 6 Work Platform Dimensions

Dimension		*Recommendation*
A	Work platform width	≥ 750 mm (29.5 in.)
	Work platform width (if used for standing only)	≥ 380 mm (15.0 in.)
B	Work platform length	≥ 925 mm (37.0 in.)
	Work platform length (if used for standing only)	≥ 450 mm (18.0 in.)

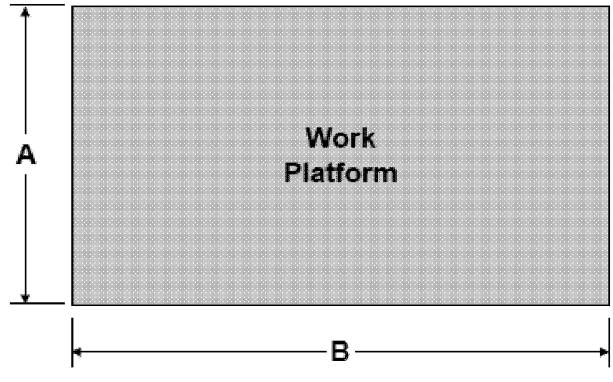

No. 132 (cont)

Annex B - Relevant Standards, Guidelines and Practices

This Annex presents a list of standards and guidance documents used by industry in relation to lighting, ventilation, vibration, noise and access in the context of their effects on human working onboard ships.

2.1 Lighting

- ASTM F1166 2007 Standard Practice for Human Engineering Design for Marine Systems, Equipment and Facilities
- IESNA RP-12-97, Recommended Practice for Marine Lighting
- ISO 8995:2000 (CIES 008/E), Lighting of indoor work places
- ILO Maritime Labour Convention
- JIS F 8041: Recommended Levels of illumination and Methods of illumination Measurement for Marine Use

2.2 Ventilation

- ANSI/ASHRAE (15) (2010). Practices for Measuring, Testing, Adjusting, and Balancing Shipboard HVAC&R Systems
- ANSI/ASHRAE 55a, (2010). Thermal environmental conditions for human occupancy
- ANSI/ASHRAE 62.1 (2010) Ventilation for Acceptable Indoor Air Quality
- ISO 7547:2008 Ships and marine technology – Air-conditioning and ventilation of accommodation spaces – Design conditions and basis of calculations
- ISO 7726 (E), (1998), Ergonomics of the thermal environment – Instruments for measuring physical quantities

2.3 Vibration

- ISO 2631-1:1997, Mechanical Vibration and Shock – Evaluation of Human Exposure to Whole Body Vibration – Part 1: General Requirements
- ISO 2631-2:2003, Mechanical Vibration and Shock – Evaluation of Human Exposure to Whole Body Vibration – Part 2: Vibration in Buildings.
- ISO 6954:2000, Mechanical Vibration and Shock – Guidelines for the Measurement, Reporting and Evaluation of Vibration with Regard to Habitability on Passenger and Merchant Ships.
- ISO 8041:2005, Human response to vibration – Measuring instrumentation.

2.4 Noise

- IMO Resolution MSC.337(91), Code on Noise Levels on Board Ships
- IMO Resolution A.468(XII), Code on Noise Levels on Board Ships

No. 132 (cont)

2.5 Access

- American Society for Testing and Materials (ASTM) F1166 2007 Standard Practice for Human Engineering Design for Marine Systems, Equipment and Facilities
- IACS (2002). Recommendation No. 78 – Safe Use of Portable Ladders for Close-up Surveys
- IACS (2005). Recommendation No. 90 – Ship Structure Access Manual
- IACS (1992). Recommendation No. 91 – Guidance for Approval/Acceptance of Alternative Means of Access
- IACS, Unified Interpretations (UI) SC191 for the application of amended SOLAS regulation II-1/3-6 (IMO Resolution MSC.151 (78)) and revised Technical provisions for means of access for inspections (IMO Resolution MSC.158 (78))
- IMO Maritime Safety Committee Resolution MSC.133 (76) Adoption of Amendments to the Technical Provisions for Means of Access for Inspections
- IMO Maritime Safety Committee Resolution MSC.134 (76) Adoption of Amendments to the International Convention for the Safety of Life At Sea
- IMO Maritime Safety Committee Resolution MSC.158 (78) (adopted 20 May 2004), Amendments to the Technical Provisions for Means of Access for Inspections

End of Document

No.55 GENERAL CARGO SHIPS - Guidelines For Surveys, Assessment and Repair of Hull Sturcture

(March 1999)

IACS

INTERNATIONAL ASSOCIATION
OF CLASSIFICATION SOCIETIES

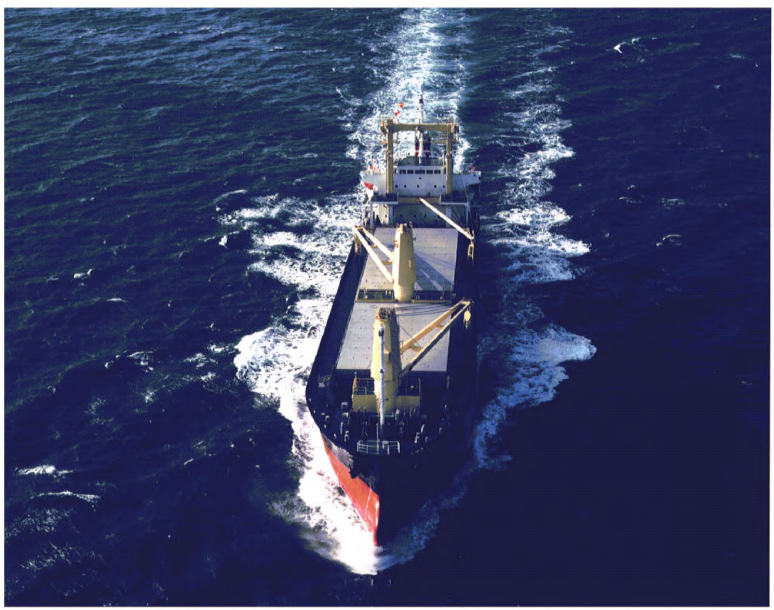

GENERAL CARGO SHIPS

Guidelines for Surveys, Assessment and Repair of Hull Structure

IACS -International Association of Classification Societies, 1999

All rights reserved.
Except as permitted under current legislation no part of this work may be photocopied, stored in a retrieval system, published, performed in public, adapted, broadcast, transmitted, recorded or reproduced in any form or by any means, without prior permission of the copyright owner.
Where IACS has granted written permission for any part of this publication to be quoted such quotation must include acknowledgment to IACS.
Enquiries should be addressed to The Permanent Secretary,
International Association of Classification Societies,
5 Old Queen Street,
London, SW1H9JA
Telephone: +44-(0)171-976 0660
Fax: +44-(0)171-976 0440
INTERNET:pegost.e-ecolog.ru

TERMS AND CONDITIONS

"The International Association of Classification Societies (IACS), its Member Societies and their officers, members, employees and agents (on behalf of whom this notice is issued) shall be under no liability or responsibility in negligence or otherwise to any person in respect of any information or advice expressly or impliedly given in this document, or in respect of any inaccuracy herein or omission herefrom or in respect of any act or omission which has caused or contributed to this document being issued with the information or advice it contains (if any).

Without derogating from the generality of the foregoing, neither IACS nor its Member Societies and their officers, members, employees or agents shall be liable in negligence or otherwise howsoever for any indirect or consequential loss to any person caused by or arising from any information, advice, inaccuracy or omission being given or contained herein or any act or omission causing or contributing to any such information, advice, inaccuracy or omission being given or contained herein."

Published in 1999 for the International Association of Classification Societies.

Contents

1 Introduction

2 Class survey requirements
2.1 Periodical classification surveys
2.1.1 General
2.1.2 Special Survey
2.1.3 Annual Survey
2.1.4 Intermediate Survey
2.1.5 Drydock Survey
2.2 Damage and repair surveys

3 Technical background for surveys
3.1 General
3.2 Definitions
3.3 Structural damages and deterioration
3.3.1 General
3.3.2 Material wastage
3.3.3 Fractures
3.3.4 Deformations
3.4 Structural detail failures and repairs
3.5 IACS Early Warning Scheme (EWS) for reporting of significant damage

4 Survey planning, preparation and execution
4.1 General
4.2 Conditions for survey
4.3 Access arrangement and safety
4.4 Equipment and tools
4.4.1 Personnel protective equipment
4.4.2 Personnel survey equipment
4.4.3 Thickness measurement and fracture detection
4.5 Survey at sea or at anchorage
4.6 Documentation on board

5 Structural detail failures and repairs
5.1 General
5.2 Catalogue of structural detail failures and repairs
Part 1 Cargo hold region
Area 1 Upper deck structure

Area 2 Side structure
Area 3 Transverse bulkhead structure
Area 4 Tween deck structure
Area 5 Double bottom structure

Part 2 Fore and aft end regions

Area 1 Fore end structure
Area 2 Aft end structure
Area 3 Stern frame, rudder arrangement and propeller shaft support

Part 3 Machinery and accommodation spaces

Area 1 Engine room structure
Area 2 Accommodation structure

1 Introduction

The International Association of Classification Societies (IACS) is introducing a series of manuals with the intention of giving guidelines to assist the Surveyors of IACS Member Societies, and other interested parties involved in the survey, assessment and repair of hull structures for certain ship types.

This manual gives guidelines for a general cargo ship which is designed with one or more decks specifically for the carriage of diverse forms of dry cargo.

Figure 1 shows a typical general arrangement of a general cargo ship with single tween deck.

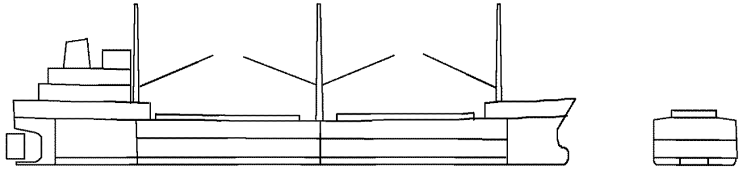

Figure 1 General view of a typical general cargo ship

The guidelines focus on the IACS Member Societies' survey procedures but may also be useful in connection with inspection/examination schemes of other regulatory bodies, owners and operators.

The manual includes a review of survey preparation guidelines which cover the safety aspects related to the performance of the survey, the necessary access facilities, and the preparation necessary before the surveys can be carried out.

The survey guidelines encompass the different main structural areas of the hull where damages have been recorded, focusing on the main features of the structural items of each area.

An important feature of the manual is the inclusion of the section which illustrates examples of structural deterioration and damages related to each structural area and gives what to look for, possible cause, and recommended repair methods, when considered appropriate.

The "IACS Early Warning Scheme (EWS)", with the emphasis on the proper reporting of significant hull damages by the respective classification societies, will enable the analysis of problems as they arise, including revisions of these Guidelines.

This manual has been developed using the best information currently available. It is intended only as guidance in support of the sound judgment of surveyors, and is to be used at the surveyors' discretion. It is recognized that alternative and satisfactory methods are already applied by surveyors. Should there be any doubt with regard to interpretation or validity in connection with particular applications, clarification should be obtained from the Classification Society concerned.

Figures 2 (a) and **(b)** show cargo hold structural configurations for general cargo ships. As many different cargoes are carried by general cargo ships, hull structures

differ in accordance with their purpose. These guidelines intend to cover those ships.

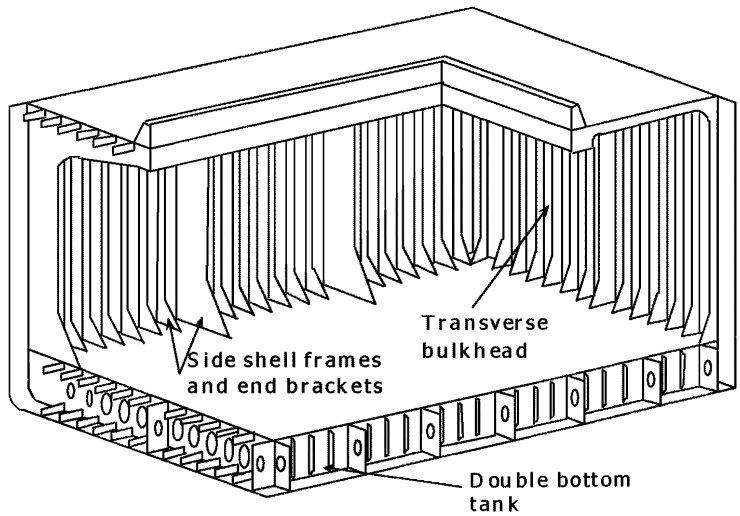

(a) Single deck ship

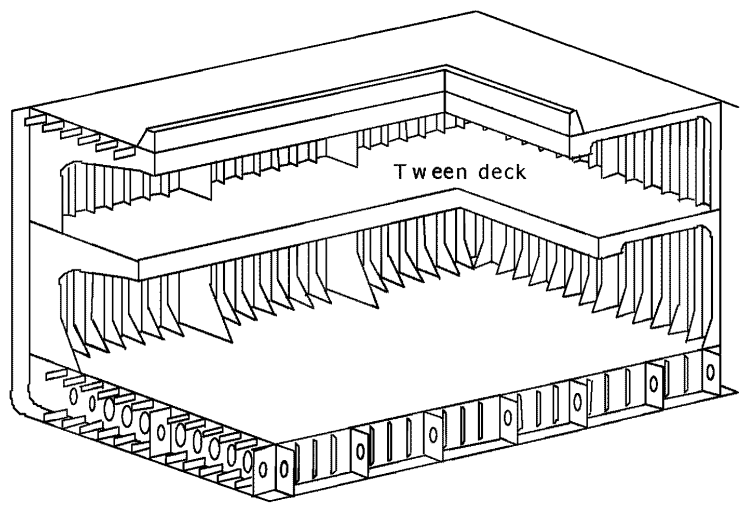

(b) Tween deck ship

Figure 2 Cargo hold structural configurations for general cargo ships

2 Class survey requirements

2.1 Periodical classification surveys

2.1.1 General

For Class the programme of ***periodical hull surveys*** is of prime importance as far as structural assessment of the cargo holds, and the adjacent tanks is concerned. The programme of ***periodical hull surveys*** consists of ***Annual***, ***Intermediate***, and ***Special Surveys***. The Purpose of the ***Annual*** and ***Intermediate Surveys*** is to confirm that the general condition of the vessel is maintained at a satisfactory level. The ***Special Surveys*** of the hull structure are carried out at five year intervals with the purpose of establishing the condition of the structure to confirm that the structural integrity is satisfactory in accordance with the Classification Requirements, and will remain fit for its intended purpose until the next ***Special Survey***, subject to proper maintenance and operation. The ***Special Surveys*** are also aimed at detecting possible damage and to establish the extent of any deterioration.

The ***Annual***, ***Intermediate***, and ***Special Surveys*** are briefly introduced in the following **2.1.2- 2.1.4**. The surveys are carried out in accordance with the requirements specified in the Rules and Regulations of each IACS Member Society.

2.1.2 Special Survey

The ***Special Survey*** concentrates on examination in association with thickness determination. The report of the thickness measurement is recommended to be retained on board. ***Protective coating condition*** will be recorded for particular attention during the survey cycle. From 1991 it is a requirement for new ships to apply a ***protective coating*** to the structure in ***water ballast tanks*** which form part of the hull boundary.

2.1.3 Annual Survey

At ***Annual Surveys*** overall survey is required. For saltwater ballast tanks, examinations may be required as a consequence of the Intermediate or Special Surveys.

2.1.4 Intermediate Survey

At ***Intermediate Surveys***, in addition to the surveys required for Annual Surveys, examination of cargo holds and ballast tanks is required depending on the ship's age.

2.1.5 Drydock Survey

Drydock Surveys are requested twice during the Special Survey interval. In some cases it may be possible to replace one ***Drydock Survey*** with an ***In-Water Survey***. This will depend on the survey requirements of the relevant Classification Society.

2.2 Damage and repair surveys

Damage surveys are occasional surveys which are, in general, outside the programme of Periodical hull surveys and are requested as a result of hull

damage or other defects. It is the responsibility of the owner or his representative to inform the Classification Society concerned when such damage or defect could impair the structural capability or watertight integrity of the hull. The damages should be inspected and assessed by the Society's surveyors and the relevant repairs, if needed, are to be performed. In certain cases, depending on the extent, type and location of the damage, permanent repairs may be deferred to coincide with the planned periodical survey.

In cases of repairs intended to be carried out by riding crew during voyage, complete procedure including all necessary surveys is to be submitted to and agreed upon by the Classification Society reasonably in advance.

3 Technical background for surveys

3.1 General

3.1.1 The purpose of carrying out the periodical hull surveys is to detect possible structural defects and damages and to establish the extent of any deterioration. To help achieve this and to identify key locations on the hull structure that might warrant special attention, knowledge of any historical problems of the particular ship or other ships of a similar class is to be considered if available. In addition to the periodical surveys, occasional surveys of damages and repairs are carried out. Records of typical occurrences and chosen solutions should be available in the ship's history file.

3.2 Definitions

3.2.1 For clarity of definition and reporting of survey data, it is recommended that standard nomenclature for structural elements be adopted. Typical sections in way of cargo holds are illustrated in **Figures 3 (a)** and **(b)**. These figures show the generally accepted nomenclature.

The terms used in these guidelines are defined as follows:

(a) **Ballast Tank** is a tank which is being used primarily for salt water ballast.

(b) **Spaces** are separate compartments including holds and tanks.

(c) **Overall Inspection** is an inspection intended to report on the overall condition of the hull structure and determine the extent of additional close-up inspections.

(d) **Close-up Inspection** is an inspection where the details of structural components are within the close visual inspection range of the surveyors, i.e. normally within reach of hand.

(e) **Transverse Section** includes all longitudinal members such as plating, longitudinals and girders at the deck, side, bottom and inner bottom.

(f) **Representative Spaces** are those which are expected to reflect the condition of other spaces of similar type and service and with similar corrosion protection systems. When selecting representative spaces, account should be taken of the service and repair history on board.

(g) **Transition Region** is a region where discontinuity in longitudinal structure occurs, e.g. at forward bulkhead of engine room, collision bulkhead and bulkheads of deep cargo tanks in cargo hold region.

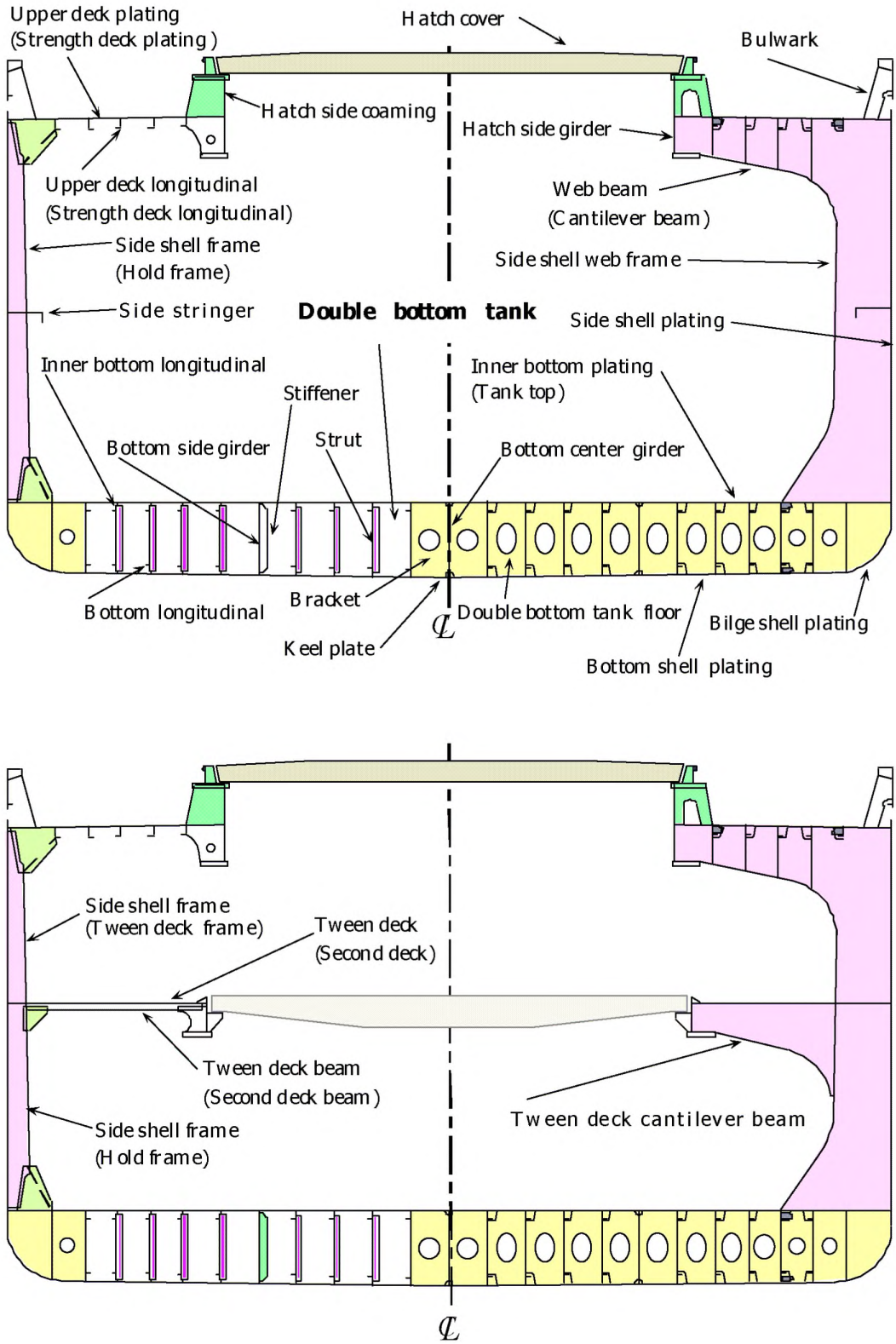

Figure 3 (a) Nomenclature for typical transverse section in way of cargo hold

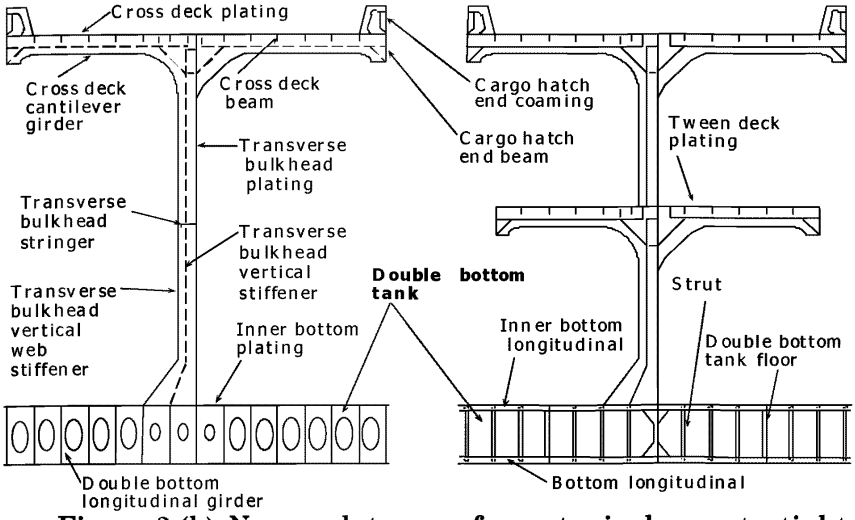

Figure 3 (b) Nomenclature for typical watertight bulkhead

3.3 Structural damages and deterioration

3.3.1 General

In the context of this manual, structural damages and deterioration imply deficiencies caused by:

- excessive corrosion
- design faults
- material defects or bad workmanship
- navigation in extreme weather conditions
- loading and unloading procedure
- wear and tear
- contact (with quay side, ice, touching underwater objects, etc.)

but not as a direct consequence of accidents such as collisions, groundings and fire/explosions.

Deficiencies are normally recognized as:

- material wastage
- fractures
- deformations

The various types of deficiencies and where they may occur are discussed in more detail as follows:

3.3.2 Material wastage

In addition to being familiar with typical structural defects likely to be encountered during a survey, it is necessary to be aware of the various forms and possible location of corrosion that may occur to the decks, holds, tanks and other structural elements.

General corrosion appears as a non-protective, friable rust which can occur uniformly on hold or tank internal surfaces that are uncoated. The rust scale continually breaks off, exposing fresh metal to corrosive attack. Thickness loss cannot usually be judged visually until excessive loss has occurred. Failure to remove mill scale during construction of the ship can accelerate corrosion experienced in service. Severe general corrosion in all types of ships, usually characterized by heavy scale accumulation, can lead to extensive steel renewals.

Grooving corrosion is often found in or beside welds, especially in the heat affected zone. The corrosion is caused by the galvanic current generated from the difference of the metallographic structure between the heat affected zone and base metal. Coating of the welds is generally less effective compared to other areas due to rough surfaces which exacerbate the corrosion. The grooving corrosion may lead to stress concentrations and further accelerate the corrosion. Grooving corrosion may be found in the base material where coating has been scratched or the metal itself has been mechanically damaged.

Pitting corrosion is often found in the bottom plating of ballast tanks. If there is a place which is liable to have corrosion due to local breakdown of coating, pitting corrosion starts. Once pitting corrosion starts, it is exacerbated by galvanic current between the pit and other metal.

Erosion which is caused by the effect of liquid and ***abrasion*** caused by mechanical effect may also be responsible for material wastage.

3.3.3 Fractures

In most cases fractures are found at locations where stress concentrations occur. Weld defects, flaws, and where lifting fittings used during the construction of the ship are not properly removed are often recognized as areas of stress concentration when fractures are found. If fractures have occurred under repeated stresses which are below the yielding stress, the fractures are called fatigue fractures. In addition to the cyclic stresses caused by wave forces, fatigue fractures are also caused by vibration forces derived from main engine or propeller especially in the afterward part of the hull. If the initiation points of the fractures are not apparent, the structure on the other side of the plating should be examined.

Fractures may not be readily visible due to lack of cleanliness, difficulty of access, poor lighting or compression of the fracture surfaces at the time of inspection. It is therefore important to identify, clean, and closely inspect potential problem areas.

Fracture initiating at latent defects in welding more commonly appear at the beginning or end of a run of welding, or rounding corners at the end of a stiffener, or at an intersection. Special attention should be paid to welding at toes of brackets, cut-outs, and intersections of welds. Fractures may also be initiated by undercutting the weld in way of stress concentrations. Although now less common, intermittent welding may cause problems because of the introduction of stress concentrations at the ends of each length of weld.

It should be noted that fractures, particularly ***fatigue fractures*** due to repeated stresses, may lead to serious damage, e.g. a fatigue fracture in a frame may propagate into shell plating and affect the watertight integrity of the hull. In extreme weather conditions the shell fracture could extend further resulting in the loss of part of the shell plating and consequent flooding of cargo hold.

3.3.4 Deformations

Deformation of structure is caused by in-plane load, out-of -plane load or combined loads. Such deformation is often identified as local deformation, such as deformation of panel including stiffener, or global deformation; such as deformation of structure including plating, beam, frame, girder, floor, etc.

If in the process of the deformation large deformation is caused due to small increase of the load, the process is called buckling.

Deformations are often caused by impact loads/contact and inadvertent overloading. Damages due to ***bottom slamming and wave impact forces*** are, in general, found in the forward part of the hull, although stern seas (pooping) have resulted in damages in way of the after part of the hull.

In the case of ***damages due to contact*** with other objects, special attention should be drawn to the fact that although damages to the shell plating may look small from the outboard side, in many cases the internal members are heavily damaged.

Permanent buckling may arise as a result of overloading, overall reduction in thickness due to corrosion, or contact damage. Elastic ***buckling*** will not be directly obvious but may be detected by coating damage, stress lines or shedding of scale. Buckling damages are often found in webs of web frames or floors. In many cases this is due to corrosion of webs/floors, too wide a spacing of stiffeners or wrongly positioned lightening holes, man-holes or slots in webs/floors.

Finally, it should be noted that inadvertent overloading may cause significant damages. In general, however, major causes of damages are associated with excessive corrosion and contact damage.

3.4 Structural detail failures and repairs

3.4.1 For examples of structural defects which have occurred in service, attention is drawn to ***Section 5 of these guidelines***. It is suggested that Surveyors and inspectors should be familiar with the contents of ***Section 5*** before undertaking a survey.

3.4.2 If replacement of defective parts must be postponed, the following temporary measures may be acceptable at the surveyor's discretion.

(a) The affected area may be sandblasted and painted in order to reduce corrosion rate.

(b) Doubler may be applied over the affected area. In case of bucking under compression, however, special consideration should be paid.

(c) Stronger members may support weakened stiffeners by applying temporarily connecting elements.
(d) Cement box may be applied over the affected area.

A suitable condition of class should be imposed when temporary measures are accepted.

3.5 IACS Early Warning Scheme (EWS) for reporting of significant hull damage

3.5.1 IACS has organised and set up a system to permit the collection, and dissemination amongst Member Societies of information (while excluding a ship's identity) on major hull damages.

3.5.2 The principal purpose of the IACS Early Warning Scheme is to enable a Classification Society with experience of a specific damage to make this information available to the other societies so that action can be implemented to avoid repetition of damage to hulls where similar structural arrangements are employed.

3.5.3 These guidelines have incorporated the experience gained from IACS EWS reporting.

4 Survey planning, preparation and execution

4.1 General

4.1.1 The owner should be aware of the scope of the forth coming survey and instruct those responsible, such as the master or the superintendent, to prepare necessary arrangements. If there is any doubt, the Classification Society concerned is to be consulted.

4.1.2 Survey execution will naturally be heavily influenced by the type of survey to be carried out. The scope of survey will have to be determined prior to the execution.

4.1.3 When deemed prudent and/or required by virtue of the periodic classification survey conducted, the surveyor should study the ship's structural arrangements and review the ship's operating and survey history and those of sister ships, where possible, to determine any known potential problem areas particular to the class of the ship. Sketches of typical structural elements should be prepared in advance so that any defects and/or ultrasonic thickness measurements can be recorded rapidly and accurately.

4.2 Conditions for survey

4.2.1 The owner is to provide the necessary facilities for a safe execution of the survey.

4.2.2 Tanks and spaces are to be safe for access, i.e. gas freed (marine chemist certificate), ventilated, etc.

4.2.3 Tanks and spaces are to be sufficiently clean and free from water, scale, dirt, oil residues, etc. and sufficient illumination is to be provided, to reveal corrosion, deformation, fractures, damages or other structural deterioration. In particular this applies to areas which are subject to thickness measurement.

4.3 Access arrangement and safety

4.3.1 In accordance with the intended survey, measures are to be provided to enable the hull structure to be examined in a safe and practical way.

4.3.2 In accordance with the intended survey in cargo holds and salt water ballast tanks a secure and acceptable means of access is to be provided. This can consist of permanent staging, temporary staging or ladders, lifts and movable platforms, or other equivalent means.

4.3.3 In addition, particular attention should be given to the following guidance:

(a) Prior to entering tanks and other enclosed spaces, e.g. chain lockers, void spaces, it is necessary to ensure that the oxygen content is to be tested and confirmed as safe. A responsible member of the crew should remain at the entrance to the space and if possible communication links should be established with both the bridge and engine room. Adequate lighting should be provided in addition to a hand held torch (flashlight).

(b) In tanks where the structure has been coated and recently deballasted, a thin slippery film may often remain on the surfaces. Care should be taken when inspecting such spaces.

(c) The removal of scale can be extremely difficult. The removal of scale by hammering may cause sheet scale to fall. When using a chipping or scaling hammer care should be taken to protect eyes, and where possible safety glasses should be worn.

If the structure is heavily scaled then it may be necessary to request de-scaling before conducting a satisfactory visual examination.

(d) Owners or their representatives have been known to request that a survey be carried out from the top of the cargo during discharging operations. For safety reason, surveys must not to be carried out during discharging operations in the hold.

(e) When entering a cargo hold or tank the bulkhead vertical ladders should be examined prior to descending to ensure that they are in good condition and rungs are not missing or loose. If holds are being entered when the hatch covers are in the closed position, then adequate lighting should be arranged in the holds. One person at a time should descend or ascend the ladder.

(f) If a portable ladder is used for survey purposes, the ladder should be in good condition and fitted with adjustable feet, to prevent it from slipping. Two crew members should be in attendance in order that the base of the ladder is adequately supported during use. The remains of cargo, in particular fine dust, on the tank top should be brushed away as this can increase the possibility of the ladder feet slipping.

(g) If an extending/articulated ladder (frame walk) is used to enable the examination of upper portions of cargo structure, the ladder should incorporate a hydraulic locking system and a built in safety harness. Regular maintenance and inspection of the ladder should be confirmed prior to its use.

(h) If a hydraulic arm vehicle ("Cherry Picker") is used to enable the examination of the upper parts of the cargo hold structure, the vehicle should be operated by qualified personnel and there should be evidence that the vehicle has been properly maintained. The standing platform should be fitted with a safety harness. For those vehicles equipped with a self leveling platform, care should be taken that the locking device is engaged after completion of maneuvering to ensure that the platform is fixed.

(i) Staging is the most common means of access provided especially where repairs or renewals are being carried out. It should always be correctly supported and fitted with handrails. Planks should be free from splits and lashed down. Staging erected hastily by inexperienced personnel should be avoided.

(j) In double bottom tanks there will often be a build up of mud on the bottom of the tank and this should be removed, in particular in way of tank boundaries, suction and sounding pipes, to enable a clear assessment of the structural condition.

4.4 Equipment and tools

4.4.1 Personal protective equipment

The following protective clothing and equipment to be worn as applicable during the surveys:

(a) ***Working clothes***: Working clothes should be of a low flammablility type and be easily visible.

(b) ***Head protection***: Hard hat (metal hats are not allowed) shall always be worn outside office building/unit accommodations.

(c) ***Hand and arm protection***: Various types of gloves are available for use, and these should be used during all types of surveys. Rubber/plastic gloves may be necessary when working in cargo holds.

(d) ***Foot protection***: Safety shoes or boots with steel toe caps and non slip soles shall always be worn outside office buildings/unit accommodations. Special footwear may be necessary on slippery surfaces or in areas with chemical residues.

(e) ***Ear protection***: Ear muffs or ear plugs are available and should be used when working in noisy areas. As a general rule, you need ear protection if you have to shout to make yourself understood by someone standing close to you.

(f) ***Eye protection***: Goggles should always be used when there is danger of solid particles or dust getting into the eyes. Protection against welding arc flashes and ultraviolet light should also be considered.

(g) ***Breathing protection***: Dust masks shall be used for protection against the inhalation of harmful dusts, paint spraying and sand blasting. Gas masks and filters should be used by personnel working for short periods in an atmosphere polluted by gases or vapour.
(Self-contained breathing apparatus: Surveyors shall not enter spaces where such equipment is necessary due to unsafe atmosphere. Only those who are specially trained and familiar with such equipment should use it and only in case of emergency).

(h) ***Lifejacket***: Recommended to be used when embarking/disembarking ships offshore, from/to pilot boat.

4.4.2 Personnel survey equipment

The following survey equipment is to be used as applicable during the surveys:

(a) ***Torches***: Torches (Flashlights) approved by a competent authority for use in a flammable atmosphere shall be used in gas dangerous areas. A high intensity beam type is recommended for in-tank inspections. Torches are recommended to be fitted with suitable straps so that both hands may be free.

(b) ***Hammer***: In addition to its normal purposes the hammer is recommended for use during surveys inside units, tanks etc. as it may be most useful for the purpose of giving distress signal in case of emergency.

(c) ***Oxygen analyser/Multigas detector***: For verification of acceptable atmosphere prior to tank entry, pocket size instruments which give an audible alarm when unacceptable limits are reached are recommended. Such equipment shall have been approved by national authorities.

(d) ***Safety belts and lines***: Safety belts and lines should be worn where high risk of falling down from more than 3 meters is present.

(e) ***Radiation meter***: For the purpose of detection of ionizing radiation (X or gamma rays) caused by radiographic examination, a radiation meter of the type which gives an audible alarm upon detection of radiation is recommended.

4.4.3 Thickness measurement and fracture detection

(a) Thickness measurement is to comply with the requirements of the Classification Society concerned. Thickness measurement should be carried out at points that adequately represent the nature and extent of any corrosion or wastage of the respective structure (plate, web, etc.).

(b) Thickness measurement is normally carried out by means of ultrasonic test equipment. The accuracy of the equipment is to be proven as required.

(c) The thickness measurement is to be carried out by a qualified company certified by the relevant Classification Society.

(d) One or more of the following fracture detection procedures may be required if deemed necessary and should be operated by experienced qualified technicians:
- radiographic equipment
- ultrasonic equipment
- magnetic particle equipment
- dye penetrant

4.5 Survey at sea or anchorage

4.5.1 Voyage surveys may be accepted provided the survey party is given the necessary assistance from the shipboard personnel. The necessary precautions and procedures for carrying out the survey are to be in accordance with **4.1** to **4.4** inclusive. Ballasting systems must be secured at all times during tank surveys.

4.5.2 A communication system is to be arranged between the survey party in the spaces under examination and the responsible officer on deck.

4.6 Documentation on board

4.6.1 The following documentation is recommended to be placed on board and maintained and updated by the owner for the life of the ship in order to be readily available for the survey party.

4.6.2 Survey Report File: This file includes Reports of Surveys and Thickness Measurement Report.

4.6.3 Supporting Documents: It is recommended that the following additional documentation be placed on board, including any other information that will assist the inspection.

(a) Main structural plans of cargo holds and ballast tanks,

(b) Previous repair history,

(c) Cargo and ballast history,
(d) Inspection and action taken by ship's personnel with reference to:
- structural deterioration in general
- leakages in bulkheads and piping
- condition of coating or corrosion protection, if any

4.6.4 Prior to inspection, it is recommended that the documents on board the vessel be reviewed as a basis for the current survey.

5 Structural detail failures and repairs

5.1 General

5.1.1 The ***catalogue of structural detail failures and repairs*** contained in this section of the ***Guidelines*** collates data supplied by the IACS Member Societies and is intended to provide guidance when considering similar cases of damage and failure. The proposed repairs reflect the experience of the surveyors of the Member Societies, but it is realized that other satisfactory alternative methods of repair may be available. However, in each case the repairs are to be completed to the satisfaction of the Classification Society Surveyor concerned.

5.2 Catalogue of structural detail failures and repairs

5.2.1 The catalogue has been sub-divided into parts and areas to be given particular attention during the surveys:

Part 1 Cargo hold region

Area 1 Upper deck structure
Area 2 Side structure
Area 3 Transverse bulkhead structure
Area 4 Tween deck structure
Area 5 Double bottom structure

Part 2 Fore and aft end regions

Area 1 Fore end structure
Area 2 Aft end structure
Area 3 Stern frame, rudder arrangement and propeller shaft support

Part 3 Machinery and accommodation spaces

Area 1 Engine room structure
Area 2 Accommodation structure

Part 1 Cargo hold region

Contents

Area 1 Upper deck structure
Area 2 Side structure
Area 3 Transverse bulkhead structure
Area 4 Tween deck structure
Area 5 Double bottom structure

Area 1 Upper deck structure

Contents

1 General

2 What to look for - On-deck inspection
2.1 Material wastage
2.2 Deformations
2.3 Fractures

3 What to look for - Under-deck inspection
3.1 Material wastage
3.2 Deformations
3.3 Fractures

4 General comments on repair
4.1 Material wastage
4.2 Deformations
4.3 Fractures
4.4 Miscellaneous

Figures and/or Photographs - Area 1	
No.	**Title**
Photograph 1	Heavy corrosion of hatch coaming

Examples of structural detail failures and repairs - Area 1	
Example No.	**Title**
1	Buckling of deck plating of transverse framing system
2	Fractures at main cargo hatch corner
3-a	Fracture of welded seam between thick plate and thin plate at cross deck
3-b	Plate buckling in thin plate near thick plate at cross deck
3-c	Overall buckling of cross deck plating
4	Buckling of web beam
5-a	Fractures in the web or in the deck at the toes of the longitudinal hatch coaming termination bracket (discontinuous longitudinal hatch coaming)
5-b	Fractures in continuous longitudinal hatch coaming extension bracket
6	Fractures in web of hatch coaming stay
7-a	Fractures in hatch coaming top plate at the termination of rail for hatch cover
7-b	Fractures in hatch coaming top plate at the termination of rail for hatch cover

Examples of structural detail failures and repairs - Area 1	
Example No.	**Title**
8	Fractures in hatch coaming top plate around resting pad
9	Fracture in deck plating at the pilot ladder access of bulwarks

1 General

1.1 Deck structures outside hatches is subjected to longitudinal hull girder bending, caused by cargo distribution and wave actions. Moreover deck structures may be subjected to severe loads due to green seas on deck, excessive deck cargo or improper handling of cargo. Certain areas of the deck may also be subjected to additional compressive stresses caused by slamming or bow flare effect at the fore ship in heavy weather.

1.2 The cross deck structure between the cargo hatches is subjected to transverse compression from the sea pressure on the ship sides and in-plane bending due to torsion distortion of the hull girders under wave action. In association with this, the area around the corner of a main cargo hatch is subjected to high cyclical stress due to the combined effect of hull girder bending moment and transverse and torsional loading.

1.3 Discontinuous cargo hatch side coamings are subjected to considerable longitudinal bending stresses although not taken into account in the strength of hull girders. This will cause additional stresses at the mid length of hatches and stress concentrations at the termination of the side coaming extensions. Continuous cargo hatch side coamings are included in the strength of hull girders and are subjected to high longitudinal bending stress at the top of the coaming amidships. Termination of continuous side coamings at the fore and aft ends are particularly vulnerable to stress concentrations.

1.4 Hatch cover operations in combination with poor maintenance can result in damage to the cleats and gasket, etc. This can result in the loss of weathertight integrity of the hold spaces. Damage to the covers can also be sustained by overloading when carrying deck cargoes.

1.5 The marine environment, the humid atmosphere due to vaporization from cargo in the cargo hold, and high temperatures on deck and hatch cover plating, from the sun and heat, may result in severe corrosion of plating and stiffeners making the structure more vulnerable to the exposures described above.

1.6 Bulwarks are provided for the protection of crew and cargoes, and lashing of cargoes on deck. Although bulwarks are not taken into account in the strength of hull girders, they are subjected to considerable longitudinal bending stresses. Therefore bulwarks may suffer fractures and corrosion, especially at the termination of bulwarks, such as at pilot ladder access or expansion joints. The fractures may propagate to deck plating and cause serious damage.

1.7 The deterioration of various fittings on deck, such as ventilators, air pipes and sounding pipes, may result in serious problems regarding weather/watertightness and/or fire fighting.

1.8 If the ship is assigned timber freeboards, fittings for stowage of timber deck cargo have to be inspected in accordance with ILLC 1966. Deterioration of the fittings may cause cargoes to shift resulting in serious damage to the ship.

2 What to look for - On-deck inspection

2.1 Material wastage

2.1.1 The general condition with regard to corrosion of the deck structure, the cargo hatch coamings and the hatch covers may be observed by visual inspection. Special attention should be paid to areas where pipes, e.g. fire main, hydraulic pipes, pipes for compressed air, are fitted close to the plating, making proper maintenance of the protective coating difficult to carry out.

2.1.2 Grooving corrosion may occur at the transition between the thicker deck plating outside the line of cargo hatches and the thinner cross deck plating, especially when the difference in plate thickness is large. The difference in plate thickness causes water to gather in this area resulting in corrosion ambience which may subsequently lead to grooving.

2.1.3 Pitting corrosion may occur throughout the cross deck strip plating and on hatch covers. The combination of accumulated water with scattered residue of certain cargoes may create a corrosive reaction.

2.1.4 Wastage/corrosion may seriously affect the integrity of the steel hatch covers, and also the additional moving parts, e.g. cleats, pot-lifts, roller wheels, etc. In some ships pontoon hatch covers together with tarpaulins are used. The tarpaulins are liable to tear due to deck cargo, such as timbers, and cause heavy corrosion to the hatch covers.

2.2 Deformations

2.2.1 Plate buckling (between stiffeners) may occur in areas subjected to in-plane compressive stresses, particularly if corrosion is evident. Special attention should be paid to areas where the compressive stresses are perpendicular to the direction of the stiffening system. Such areas may be in the foreship where deck longitudinals are terminated and replaced by transverse beams (See **Example 1**), but also in the cross deck strips between hatches when longitudinal stiffening is applied (See **Examples 3-b** and **3-c**).

2.2.2 Deformed structures may be observed in areas of the deck, hatch coamings and hatch covers where cargo has been handled/loaded or mechanical equipment, e.g. hatch covers, has been operated. Also in other areas, in particular exposed deck forward, deformation may result when green seas on deck have been suffered.

2.2.3 Sagging plate panel may have been caused by lateral overloading as a consequence of excessive deck cargo, improper distribution /support of deck cargoes, sea water on deck in heavy weather, or a combination of these factors. It is essential that an under-deck inspection is also carried out to assess the extent of such damage (See **Example 4**).

2.2.4 Deformed/twisted exposed structures above deck, such as side-coaming brackets, may result from impact of cargo or cargo handling machinery due to improper handling. Such damages may also be caused by sea water on deck in heavy weather.

2.3 Fractures

2.3.1 Fractures in areas of structural discontinuity and stress concentration will normally be detected by close-up inspection. Special attention should be given to the structures at cargo hatches in general and to corners of deck openings in particular.

2.3.2 Fractures initiated in the deck plating outside the line of hatches (See **Example 2**), may develop across the deck, with the most serious consequences. Also fractures initiated in the deck plating of the cross deck strip, in particular at the transition between the thicker deck plating outside the line of cargo hatches and the thinner cross deck plating (See **Example 3-a**), may have serious consequences if not repaired immediately.

2.3.3 Other fractures that may occur in the deck plating at hatches and in connected coamings can result/originate from:

(a) Fillet weld connection of the coaming to the deck, particularly at a radiused coaming plate at the hatch corner plating.
(b) Welded attachment and shedder plate close to or on the free edge of the hatch corner plating.
(c) The geometry of the corners of the hatch openings.
(d) The termination of the side coaming extension brackets (See **Examples 5-a** and **5-b**).
(e) Grooving caused by wire ropes of cargo gear.
(f) Wasted plating.
(g) Attachments, cut-outs and notches for securing devices, and operating mechanisms for opening/closing hatch covers at the top of the coaming and/or coaming top bar, if any, at the mid-length of the hatch (See **Examples 7-a** and **7-b**).
(h) Hatch coaming stays supporting the hatch cover resting pads in case of deck loads on the hatch covers and the connection of resting pad to the top of the coaming as well as the supporting structures (See **Example 8**).

2.3.4 Fractures in deck plating often occur at the termination of bulwarks, such as pilot ladder recess, due to stress concentration. The fractures may propagate themselves resulting in serious casualty when the deck is subject to high longitudinal bending stress.

3 What to look for - Under-deck inspection

3.1 Material wastage

3.1.1 The level of wastage of under-deck stiffeners/structures may have to be established by means of thickness measurements. As mentioned previously the combination of the effects from the marine environment and the local atmosphere will give rise to high corrosion rates.

3.1.2 Severe corrosion of the hatch coaming from inside and of under deck girders may occur due to difficult access for maintenance of the protective coating. This may in turn lead to fractures (See **Photograph 1**).

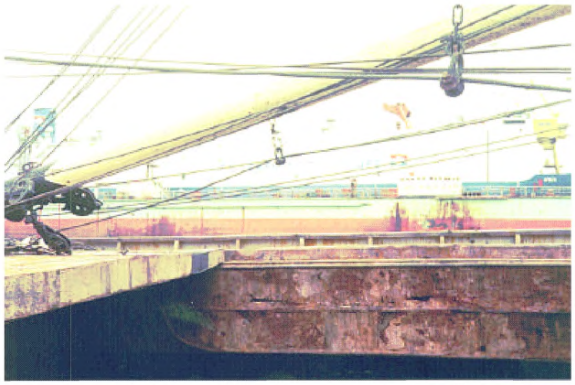

Photograph 1 Heavy corrosion of hatch coaming

3.2 Deformations

3.2.1 Buckling should be looked for in the primary supporting structure, e.g. hatch end beams and longitudinal girders beneath the longitudinal hatch coamings, if sagging of deck panels has been observed during on-deck inspection. Such buckling may also be the initial observation of damage caused by lateral overloading as a consequence of excessive deck cargo, improper distribution/support of deck cargoes, sea water on deck in heavy weather, or a combination of these causes.

3.3 Fractures

3.3.1 Fractures in the connection between the transverse bulkheads, girders/stiffeners and the deck plating may occur. This is often associated with a reduction in area of the connection due to corrosion.

3.3.2 Fractures in the primary supporting structure, e.g. hatch end beams may be found in the weld connections at the ends of the beams/girders.

4 General comments on repair

4.1 Material wastage

4.1.1 In the case of grooving corrosion at the transition between the thicker deck plating outside the ine of cargo hatches and the cross deck plating, consideration should be given to the renewal of part of, or the entire width, of the adjacent cross deck plating.

4.1.2 In the case of pitting corrosion throughout the cross deck strip plating, consideration should be given to renewal of part of or the entire cross deck plating.

4.1.3 When heavy wastage is encountered on under-deck structure, the whole or part of the structure may be cropped and renewed depending on the permissible diminution levels applied by the Classification Society concerned.

4.1.4 For wastage of cargo hatch covers a satisfactory thickness determination is to be carried out and the plating and stiffeners are to be cropped and renewed as appropriate depending on the extent of the wastage.

4.2 Deformations

4.2.1 When buckling of the deck plating has occurred, although not in association with significant corrosion, appropriate reinforcement is necessary in addition to cropping and renewal.

4.2.2 Where buckling of hatch end beams has occurred because of inadequate transverse strength, the plating should be cropped and renewed and additional panel stiffeners fitted.

4.2.3 Buckled cross deck structure due to loss in strength induced by wastage, is to be cropped and renewed as necessary. If the cross deck is stiffened longitudinally and the buckling results from inadequate transverse strength, additional transverse stiffeners should be fitted.

4.2.4 Deformations of cargo hatch covers should be cropped and partly renewed, or renewed in full, depending on the extent of the damage.

4.3 Fractures

4.3.1 Fractures in way of cargo hatch corners should be carefully considered with respect to the design details (See **Example 2**). Re-welding of such fractures is normally not considered a permanent solution. Where the difference in thickness between an insert plate and the adjacent deck plating is greater than 3 mm the edge of the insert plate should be suitably beveled. In order to reduce the residual stress arising from this repair situation, the welding sequence and procedure is to be carefully monitored and low hydrogen electrodes should be used for welding the insert plate to the adjoining structure. Where welded shedder plates are fitted into the corners of the hatch coamings the deck connection should be left unwelded.

4.3.2 In the case of fractures at the transition between the thicker deck plating outside the line of cargo hatches and the cross deck plating, consideration should be given to renewal of part or the entire width of the adjacent cross deck plating, possibly with increased thickness (See **Example 3-a**).

4.3.3 When fractures have occurred in the connection of transverse bulkheads to the cross deck structure, consideration should be given to renewing and re-welding the connecting structure beyond the damaged area with the aim of increasing the area of the connection.

4.3.4 Fractures of hatch end beams should be repaired by renewing the damaged structure, and by full penetration welding to the deck.

4.3.5 To reduce the possibility of future fractures in cargo hatch coamings the following details should be observed:

(a) Cut-outs and other discontinuities at the top of coamings and/or coaming top bar should have rounded corners (preferably elliptical or circular in shape) (See **Example 7-b**).

Any local reinforcement **should** be given a tapered transition in the longitudinal direction and the rate of taper should not exceed 1 in 3 (See **Example 7-a**).

(b) Fractures, which occur in the fillet weld connections to the deck of radiused coaming plates at the corners, should be repaired by replacing existing fillet welds with full penetration welding using low hydrogen electrodes or equivalent. If the fractures are extensive and recurring, the coamings should be redesigned to form square corners with the side coaming extending in the form of tapered brackets. Continuation brackets also to be arranged transversely in line with the hatch end coamings and the under-deck transverse.

(c) Cut-outs and drain holes are to be avoided in the hatch side coaming extension brackets. For fractured brackets, see **Examples 5-a** and **5-b**.

4.3.6 For cargo hatch covers, fractures of a minor nature may be veed-out and welded. For more extensive fractures, the structure should be cropped and partly renewed.

4.3.7 For fractures (and heavy corrosion) at the end of bulwarks an attempt should be made to modify the design in order to reduce the stress concentration in connection with general cropping and renewal (See **Example 9**).

4.4 Miscellaneous

4.4.1 Ancillary equipment such as cleats, rollers etc. on cargo hatch covers is to be renewed when damaged or corroded.

GENERAL CARGO SHIPS	Guidelines for Surveys, Assessment and Repair of Hull Structure	
Part 1	**Cargo hold region**	**Example No.**
Area 1	**Upper deck structure**	**1**
Detail of damage	Buckling of deck plating of transverse framing system	

Sketch of damage

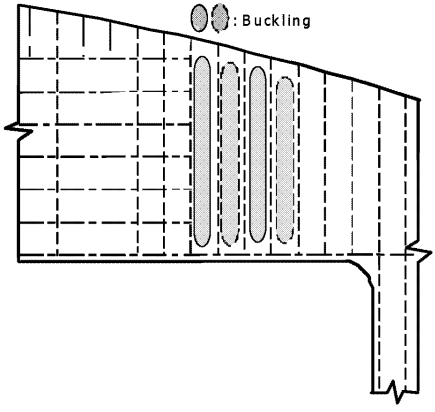

Sketch of repair

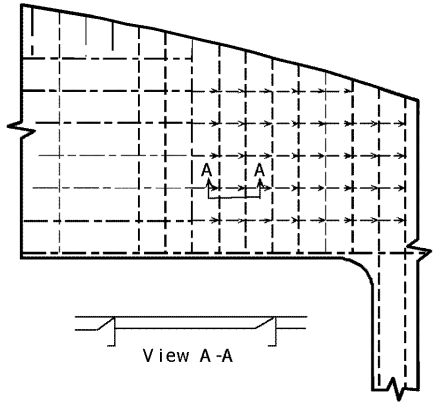

Notes on possible cause of damage

1. Excessive compressive stress due to slamming or bow flare effect.
2. Insufficient longitudinal stiffening of deck plating.

Notes on repairs

1. Buckled plating should be cropped and renewed. Longitudinal internal stiffeners should be provided. (Instead of longitudinal stiffeners, renewal by thicker deck plating can be
2. accepted.) Stress concentration may occur at the end of sniped stiffener resulting in fatigue fracture. For locations where high cyclic stress may occur, appropriate connection such as lug-connection should be considered.

GENERAL CARGO SHIPS	Guidelines for Surveys, Assessment and Repair of Hull Structure	
Part 1	**Cargo hold region**	**Example No.**
Area 1	**Upper deck structure**	**2**
Detail of damage	Fractures at main cargo hatch corner	

Sketch of damage

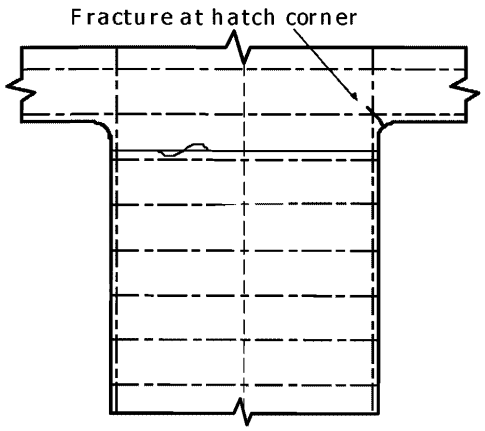

Sketch of repair

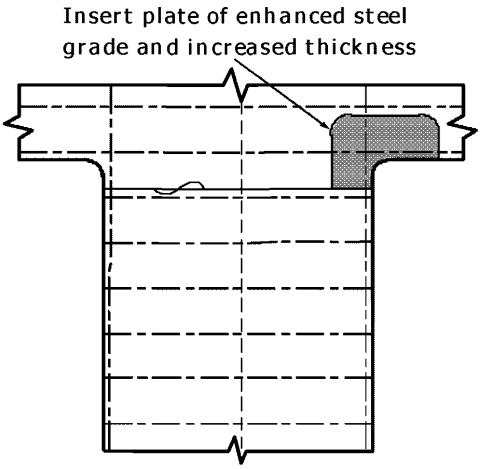

Notes on possible cause of damage

1. Stress concentration at hatch corners, i.e. radius of corner.
2. Welded attachment of shedder plate close to edge of hatch corner.
3. Wire rope groove.

Notes on repairs

1. The corner plating in way of the fracture is to be cropped and renewed. If stress concentration is primary cause, insert plate should be of increased thickness, enhanced steel grade and/or improved geometry.
   Insert plate should be continued beyond the longitudinal and transverse extent of the hatch corner radius ellipse or parabola, and the butt welds to the adjacent deck plating should be located well clear of the butts in the hatch coaming.
   It is recommended that the edges of the insert plate and the butt welds connecting the insert plates to the surrounding deck plating be made smooth by grinding. In this respect caution should be taken to ensure that the micro grooves of the grinding are parallel to the plate edge.
2. If the cause of fracture is welded attachment of shedder plate, the deck connection should be left unwelded.
3. If the cause of the fracture is wire rope groove, replacement to the original design can be accepted.

GENERAL CARGO SHIPS	Guidelines for Surveys, Assessment and Repair of Hull Structure	
Part 1	**Cargo hold region**	**Example No.**
Area 1	**Upper deck structure**	**3-a**
Detail of damage	Fracture of welded seam between thick plate and thin plate at cross deck	

Sketch of damage

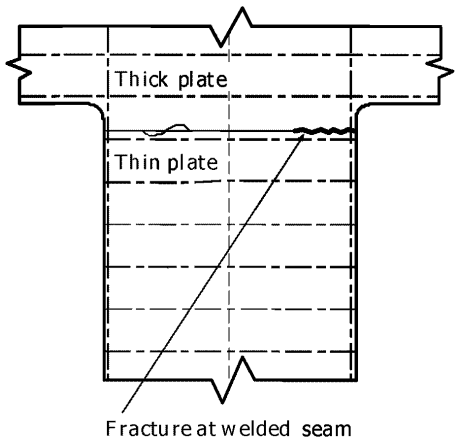

Sketch of repair

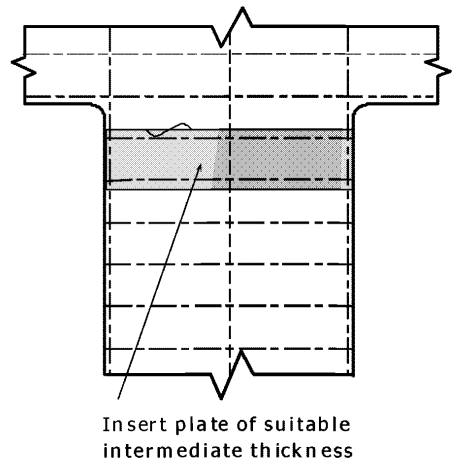

Notes on possible cause of damage

1. Stress concentration created by abrupt change in deck plating thickness.
2. In-plane bending in cross deck strip due to torsional (longitudinal) movements of ship sides.
3. Welded seam not clear of tangent point of hatch corner.

Notes on repairs

1. Insert plate of intermediate thickness is recommended.
2. Smooth transition between plates (beveling) should be considered.

GENERAL CARGO SHIPS	Guidelines for Surveys, Assessment and Repair of Hull Structure	
Part 1	**Cargo hold region**	**Example No.**
Area 1	**Upper deck structure**	**3-b**
Detail of damage	Plate buckling in thin plate near thick plate at cross deck	

Sketch of damage

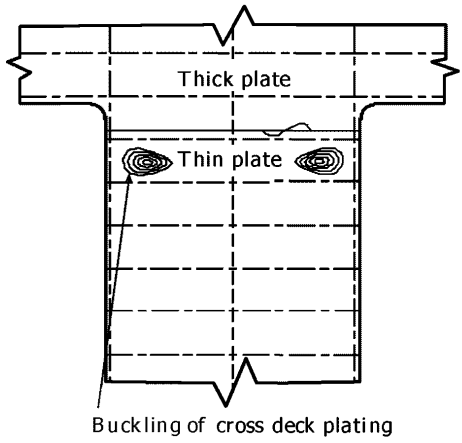

Sketch of repair

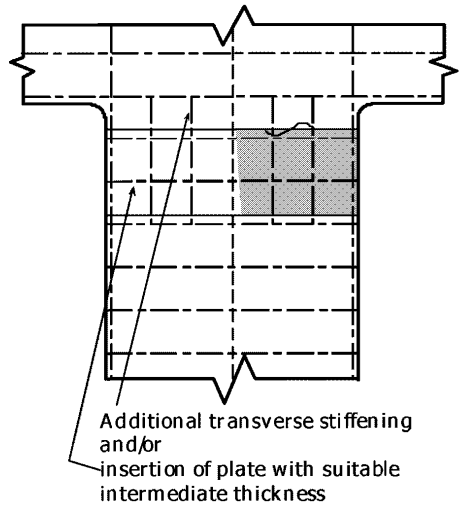

Notes on possible cause of damage

1. In-plane bending of cross deck strip due to torsional (longitudinal) movement of ship sides, often in combination with
2. corrosion.
   Insufficient transverse stiffening.

Notes on repairs

1. Transverse stiffeners extending from hatch sides towards centerline at least 10% of breadth of hatch, and/or increased plate thickness in the same area.

GENERAL CARGO SHIPS	Guidelines for Surveys, Assessment and Repair of Hull Structure	
Part 1	**Cargo hold region**	**Example No.**
Area 1	**Upper deck structure**	**3-c**
Detail of damage	Overall buckling of cross deck plating	

Sketch of damage

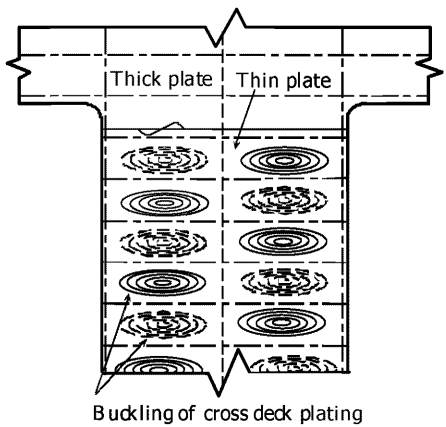

Sketch of repair

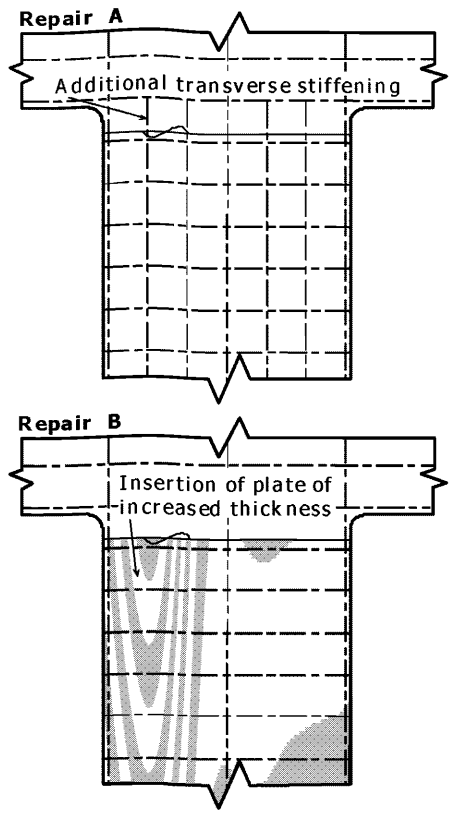

Notes on possible cause of damage

1. Transverse compression of deck due to sea load.
2. Insufficient transverse stiffening.

Notes on repairs

1. **Repair A**
   Plating of original thickness in combination with additional transverse stiffening.
2. **Repair B**
   Insertion of plating of increased thickness.

GENERAL CARGO SHIPS	Guidelines for Surveys, Assessment and Repair of Hull Structure	
Part 1	**Cargo hold region**	**Example No.**
Area 1	**Upper deck structure**	**4**
Detail of damage	Buckling of web beam	

Sketch of damage

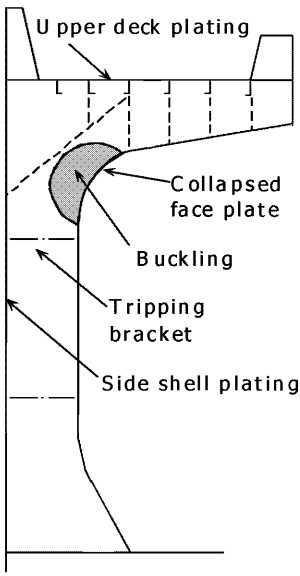

Sketch of repair

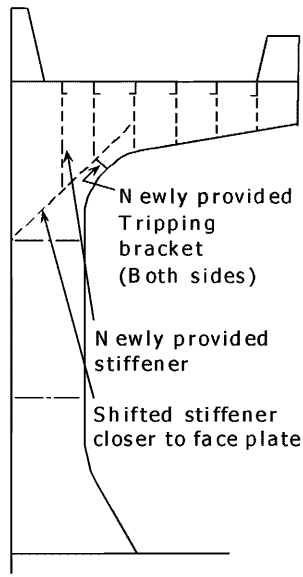

Notes on possible cause of damage

1. Overloading by green sea on deck or by excessive deck cargo.
2. Excessive corrosion.
3. Insufficient/improper web stiffening.

Notes on repairs

1. Buckled part is to be cropped and renewed .
2. If corrosion is not the cause, renewal by thicker plate (web and/or face) and/or reinforcement by stiffener and tripping bracket should be considered.

.

GENERAL CARGO SHIPS	Guidelines for Surveys, Assessment and Repair of Hull Structure	
Part 1	**Cargo hold region**	**Example No.**
Area 1	**Upper deck structure**	**5-a**
Detail of damage	Fractures in the web or in the deck at the toes of the longitudinal hatch coaming termination bracket (discontinuous longitudinal hatch coaming)	

Sketch of damage

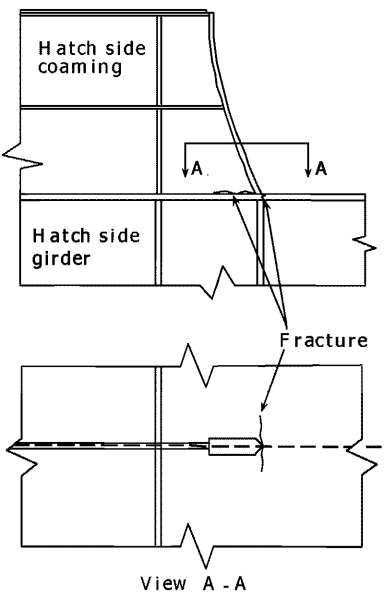

Sketch of repair

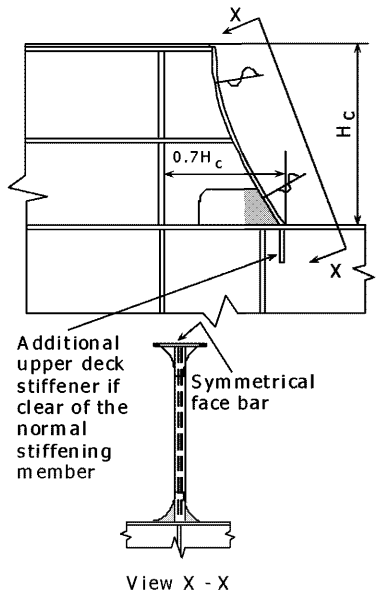

Notes on possible cause of damage

1. This damage is caused by stress concentrations attributed to the design of the bracket.

Notes on repairs

1. The design of the bracket can be altered as shown above, however, it is to be ensured that an additional under deck stiffener is provided at the toe of the termination bracket, where the toe is clear of the normal stiffening member.
2. Full penetration weld for a distance of 0.15 H_C from toe of side coaming termination bracket and for connection of athwartship gusset bracket to deck.
3. The fracture in deck plating to be veed-out and rewelded or deck plating cropped and part renewed as appropriate, using low hydrogen electrodes for welding.

GENERAL CARGO SHIPS	Guidelines for Surveys, Assessment and Repair of Hull Structure	
Part 1	**Cargo hold region**	**Example No.**
Area 1	**Upper deck structure**	**5-b**
Detail of damage	Fractures in continuous longitudinal hatch coaming extension bracket	

Sketch of damage

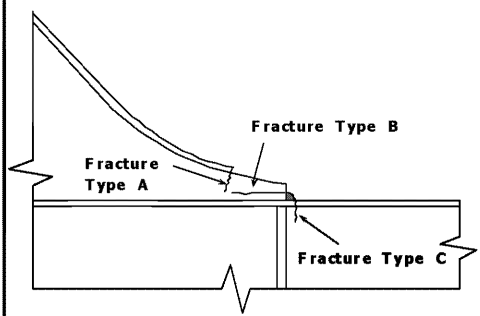

Sketch of repair

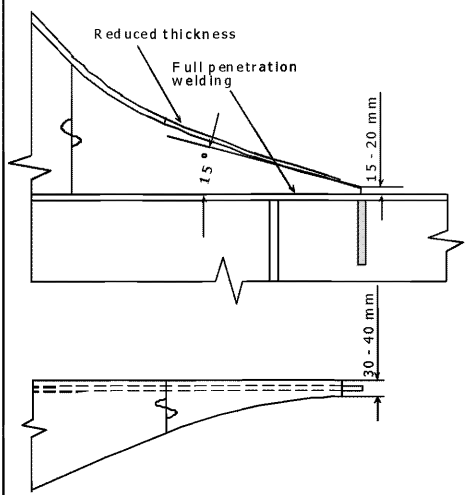

Notes on possible cause of damage

1. Flange force at the end of the flange too high due to insufficient tapering (**Fracture Type A**, propagating in the
2. web).
   Shear force in the web plate too high due to insufficient reduction of the web height at the end (**Fracture Type B**, propagating in the web at the undercut or
3. HAZ of the fillet weld).
   Insufficient support of the extension bracket below the deck (**Fracture Type C**, starting from undercut or HAZ of the fillet weld and propagating in the deck plating).

Notes on repairs

1. Extend the extension bracket as long as possible to arrange a gradual
2. transition.
   Reduce the web height at the end of the bracket; in case of high stress areas grind smooth the transition to the deck
3. plating welding.
   Reduce the cross sectional area of the
4. flange at the end as far as possible.
   Provide longitudinal structure in way of the web of the extension bracket to the next transverse structure or provide a new transverse structure.

GENERAL CARGO SHIPS	Guidelines for Surveys, Assessment and Repair of Hull Structure	
Part 1	**Cargo hold region**	**Example No.**
Area 1	**Upper deck structure**	**6**
Detail of damage	Fractures in web of transverse hatch coaming stay	

Sketch of damage

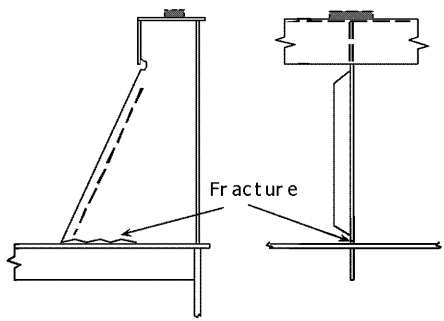

Sketch of repair

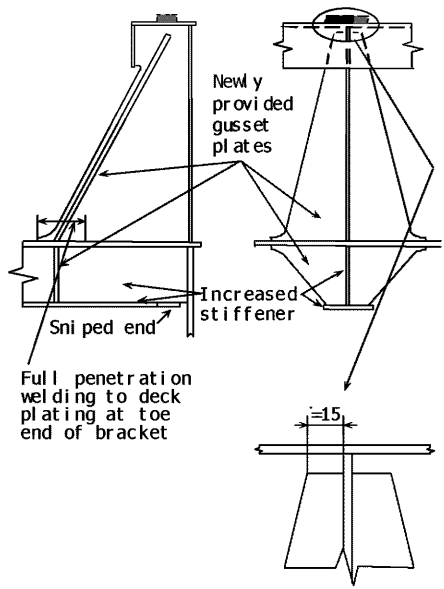

Notes on possible cause of damage

1. Insufficient consideration of the horizontal friction forces in way of the resting pads for hatch cover.

Notes on repairs

1. Modification of the design of the hatch coaming stay.
2. Full penetration welding between gusset plates and deck plating.
3. Strengthening and continuation of the structure below the deck.
4. Use pads with smaller coefficient of friction.

GENERAL CARGO SHIPS	Guidelines for Surveys, Assessment and Repair of Hull Structure	
Part 1	**Cargo hold region**	**Example No.**
Area 1	**Upper deck structure**	**7-a**
Detail of damage	Fractures in hatch coaming top plate at the termination of rail for hatch cover	

Sketch of damage

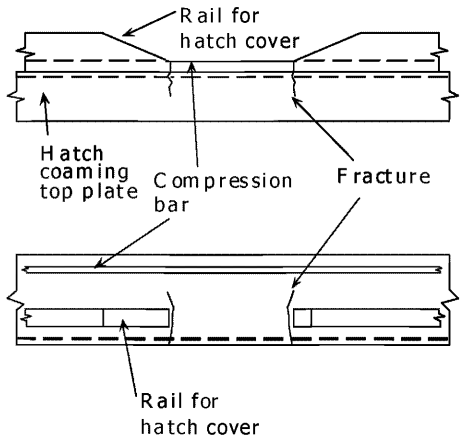

Sketch of repair

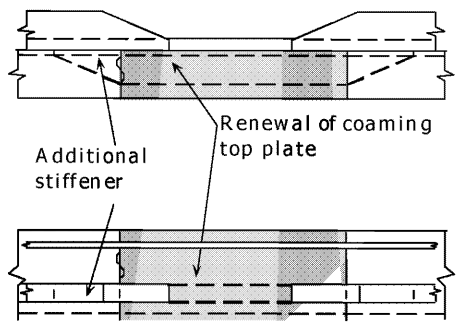

Notes on possible cause of damage

1. Stress concentration at the termination of the rail for hatch cover.

Notes on repairs

1. Fractured plate is to be cropped and part renewed.
2. Thicker insert plate and/or reinforcement by additional stiffener under the top plate should be considered. Also refer to **Example 7-b**.

GENERAL CARGO SHIPS	Guidelines for Surveys, Assessment and Repair of Hull Structure	
Part 1	**Cargo hold region**	**Example No.**
Area 1	**Upper deck structure**	**7-b**
Detail of damage	Fractures in hatch coaming top plate at the termination of rail for hatch cover	

Sketch of damage

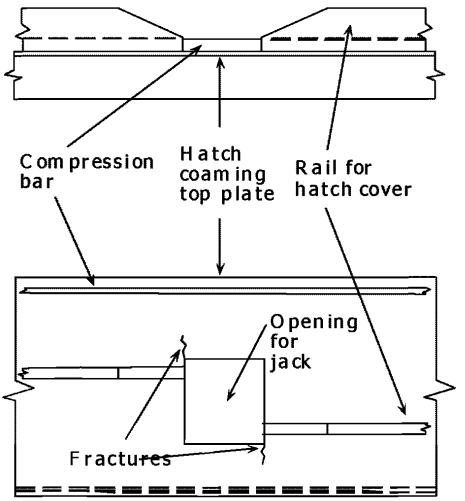

Sketch of repair

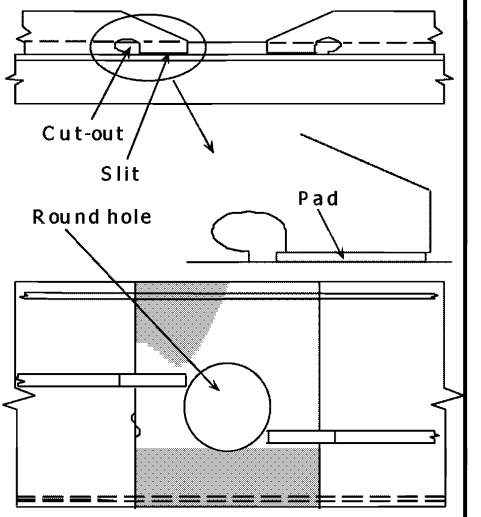

Notes on possible cause of damage

1. Stress concentration at the termination of the rail for hatch cover.

Notes on repairs

1. Fractured plate is to be cropped and part renewed.
2. Thicker insert plate and/or reduction of stress concentration adopting large radius should be considered.
   Or cut-out in the rail and detachment of the welds as shown in the above drawing should be considered in order to reduce the stress of the corner of the opening.

GENERAL CARGO SHIPS	Guidelines for Surveys, Assessment and Repair of Hull Structure	
Part 1	**Cargo hold region**	**Example No.**
Area 1	**Upper deck structure**	**8**
Detail of damage	Fractures in hatch coaming top plate around resting pad	

Sketch of damage

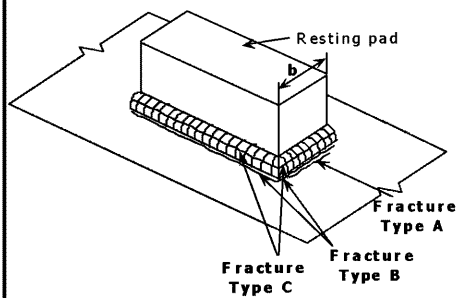

Fracture Type A:
Starting in way of the undercut or HAZ of the transverse fillet weld and propagating in the top plating.

Fracture Type B:
Starting in way of the undercut or HAZ of the longitudinal fillet weld and propagating in the top plating.

Fracture Type C:
Starting and propagating in fillet weld

Sketch of repair

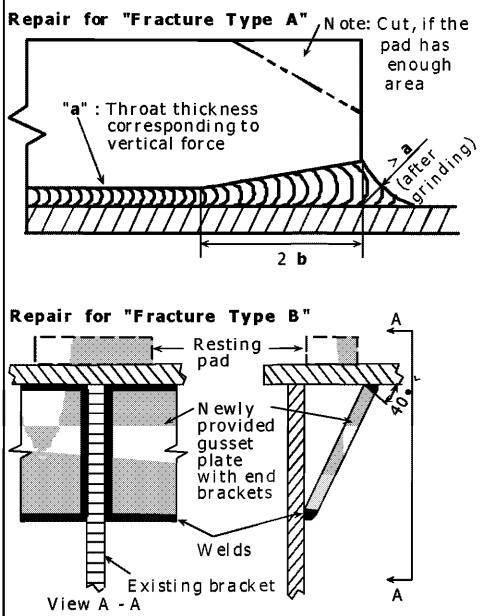

Notes on possible cause of damage

1. **Fracture Type A**:
   Inappropriate transition from the hatch coaming top plating to the resting pad in respect to longitudinal stresses.
2. **Fracture Type B**:
   Insufficient support of the resting pad below the top plating.
3. **Fracture Type C**:
   Insufficient throat thickness of the fillet weld in relation to the vertical forces.

Notes on repairs

1. **Fracture Type A**:
   Modification of the transverse fillet weld according to the sketch; in some cases smoothing of the transition by grinding is acceptable.
2. **Fracture Type B**:
   Strengthening of the structures below the top plating according to the sketch.
3. **Fracture Type C**:
   Increasing the throat thickness corresponding to the acting vertical forces.

GENERAL CARGO SHIPS	Guidelines for Surveys, Assessment and Repair of Hull Structure	
Part 1	**Cargo hold region**	**Example No.**
Area 1	**Upper deck structure**	**9**
Detail of damage	Fracture in deck plating at the pilot ladder access of bulwarks	

Sketch of damage

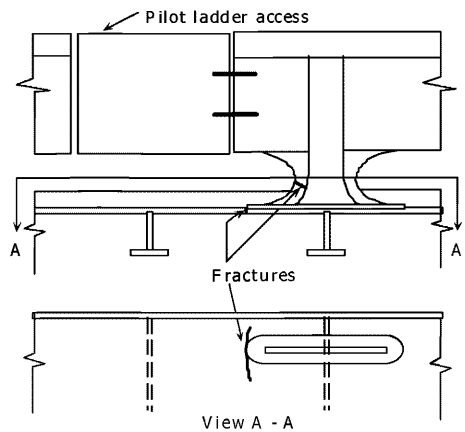

Sketch of repair

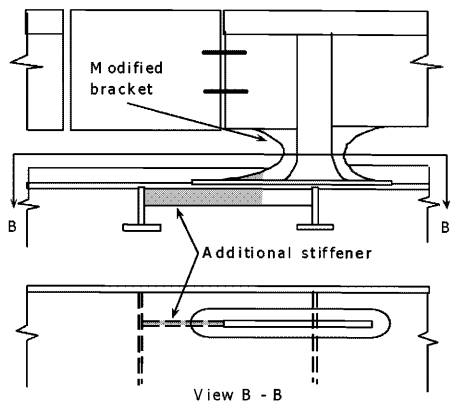

Notes on possible cause of damage

1. Stress concentration at the termination of bulwarks.

Notes on repairs

1. Fractured deck plating should be cropped and part renewed.
2. Reduction of stress concentration should be considered. In the above figure gusset plate was replaced with soft type for the fracture in gusset plate and pad plate was increased. Additional stiffeners were provided for the fracture in deck plating.

Area 2 Side structure

Contents

1 General

2 What to look for - Internal inspection
2.1 Material wastage
2.2 Deformations
2.3 Fractures

3 What to look for - External inspection
3.1 Material wastage
3.2 Deformations
3.3 Fractures

4 General comments on repair
4.1 Material wastage
4.2 Deformations
4.3 Fractures

Figures and/or Photographs - Area 2	
No.	**Title**
Figure 1	Potential problem areas
Photograph 1	Leakage from side shell plating due to heavy corrosion
Photograph 2	Timber carriers listing due to ingress of water

Examples of structural detail failures and repairs - Area 2	
Example No.	**Title**
1	Fracture in side shell frame at lower bracket
2	Fractures in side shell frame/lower bracket and side shell plating near tank top
3	Adverse effect of corrosion on the frame of forward/afterward hold
4	Fractures at the supporting brackets in way of collision bulkhead, (with no side shell panting stringers fitted in hold)
5	Fractures in way of continuation/extension bracket in aftermost hold at the engine room bulkhead
6	Fracture in way of continuation/extension brackets at the end of deep cargo tank

1 General

1.1 The shear capacity is the main contribution of the side shell to the general structural strength of the ship's hull. Shear stresses arise as a consequence of local unbalance longitudinally between the vertical forces of cargo loads and steel-weight, and the up-thrust of buoyancy.

1.2 In addition to the contribution to the general structural strength of the ship's hull, the side shell is the defense against ingress/leakage of sea water, when subjected to static sea pressure and dynamic effects of ship movement and wave actions in heavy weather.

1.3 The ship side may suffer damage due to contact with the quay during berthing and impacts from cargo and/or equipment during cargo handling.

1.4 The marine environment (such as ultraviolet rays, high temperature, alternate wet and dry conditions due to wave or change of loading conditions etc.) in association with the characteristics of certain cargoes (e.g. wet timber loaded from sea water) may result in deterioration of coating and severe corrosion of plating and stiffeners. This situation makes the structure more vulnerable to the exposures described above.

1.5 The transition regions are subject to stress concentrations due to structural discontinuities. The side shell plating in fore and aft transition regions is also subject to panting. The lack of continuity of the longitudinal structure, and the greater slenderness and flexibility of the side structure near the more rigid end structures, can result in damages.

1.6 A summary of potential problem areas is shown in **Figures 1 (a)** and **(b)**. Serious consequences of damaged ship sides are illustrated in **Photographs 1** and **2**.

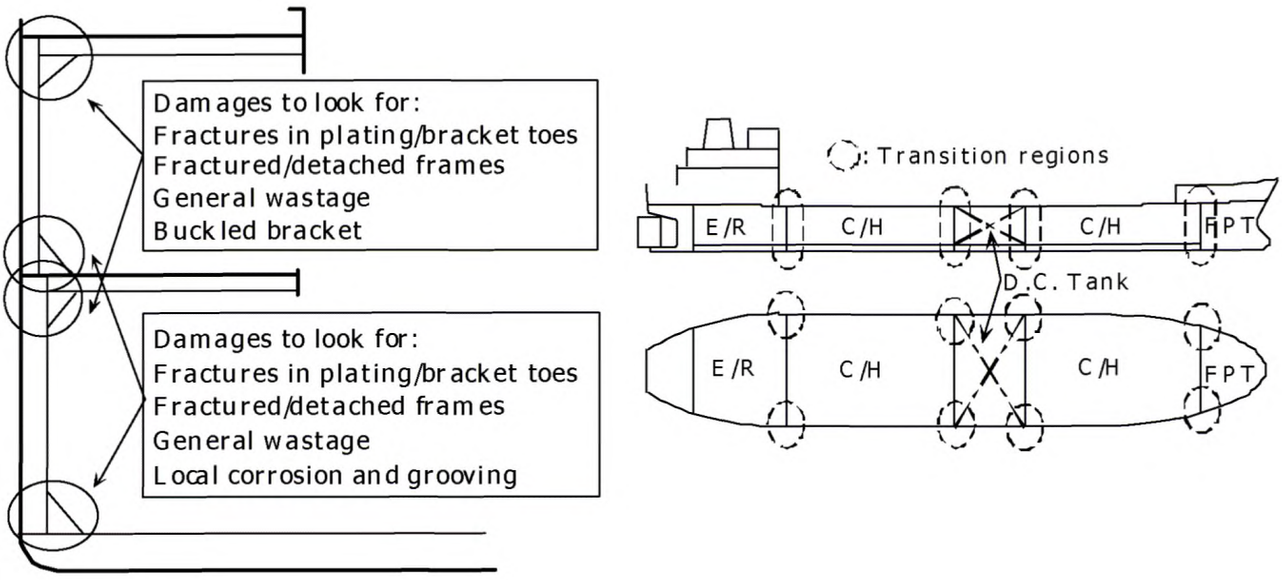

(a) Side shell frames **(b) Transition regions**

Figure 1 Potential problems areas



Photograph Leakage from side shell plating due to heavy corrosion



Photograph 2 Timber carrier listing due to ingress of water

2 What to look for - Internal inspection

2.1 Material wastage

2.1.1 Attention is drawn to the fact that the tween deck and side shell frames may be significantly weakened by loss of thickness although diminution and deformations may not be apparent. Inspection should be made after the removal of any scale or rust deposit and thickness measurement gauging may be necessary, particularly if the corrosion is smooth and uniform.

2.1.2 It is not unusual to find highly localised corrosion on uncoated side shell frames and their end connections. The loss in the thickness is normally greater close to the side shell plating rather than near the faceplate (See **Example 2**). This situation, if not remedied, can result in loss of support to the shell plating and hence large inboard deflections. In many cases such deflections of the side shell plating can generate fractures in the shell plating and fracturing and buckling of the frame web plates and eventually result in detachment of the end brackets from the tank top.

2.1.3 Heavy wastage and possible grooving of the framing in forward/ aft hold, where side shell plating is oblique to the frames it may have a more severe effect as shown in **Example 3**.

2.2 Deformations

2.2.1 It is normally to be expected that the lower region of the frames will receive some level of damage during operational procedures, e.g. unloading with grabs or loading of logs. This can range from damage of the frame end bracket face plates to large physical deformations of a number of frames and in some cases can initiate fractures.

These individual frames and frame brackets, if rendered ineffective, will place

additional load on the adjacent frames and failure by the "domino effect" can in many cases extend over the side shell of a complete hold.

2.3 Fractures

2.3.1 Fractures are more evident at the toes of the upper and lower bracket(s) or at the connections between brackets and frames. In most cases the fractures may be attributed to stress concentrations and stress variations created, in the main, by loads from the seaway. The stress concentrations can be a result of poor detail design and/or bad workmanship. Localised fatigue fracturing, possibly in association with localised corrosion, may be difficult to detect and it is stressed that the areas in question should receive close attention during periodical surveys.

2.3.2 Fractures in shell plating and supporting or continuation/extension brackets at collision bulkheads, deep tank bulkheads, and engine room bulkheads are frequently found by close-up inspection.

3 What to look for - External inspection

3.1 Material wastage

3.1.1 The general condition with regard to wastage of the ship's sides may be observed by visual inspection from the quayside of the area above the waterline. Special attention should be paid to areas where the painting has deteriorated.

3.2 Deformations

3.2.1 The side shell should be carefully inspected with respect to possible deformations. The side shell below water line can usually only be inspected when the ship is dry docked. Therefore special attention with respect to possible deformations should be made during dry-docking taking into account the period until the next dry-docking. When deformation of the shell plating is found, the area should also be inspected internally since even a small deformation may indicate serious damage to the internal structure.

3.3 Fractures

3.3.1 Fractures in the shell plating in way of ballast tanks may be detected above the water line and below the water line during dry-docking in a wet area in contrast to otherwise dry shell plating.

4 General comments on repair

4.1 Material wastage

4.1.1 In general, where part of the hold framing and/or associated end brackets has corroded to the permissible minimum thickness at the time of inspection (judged to have sufficient corrosion margin until next major survey), then the normal practice is to crop and renew the area affected. If the remaining section of the frames/brackets marginally remain within the allowable limit, surveyors should request that affected frames and associated end brackets be renewed. Alignment of end brackets with the structure inside the double

bottom or the opposite side of tween deck is to be ensured. It is recommended that repaired areas be coated.

4.2 Deformations

4.2.1 The structure should be restored to its original shape and position either by fairing in place or by cropping and renewing the affected structure, based on the depth and extent of the deformations.

4.3 Fractures

4.3.1 All fractures in side shell frames or their end brackets are to be repaired.

4.3.2 Fractured parts of supporting brackets and continuation/extension brackets at collision bulkhead, deep tank bulkheads, and engine room bulkhead are to be part renewed. Modification of shape and possible extension of the brackets should be considered. Affected shell plating in way of the damaged brackets should be cropped and renewed.

GENERAL CARGO SHIPS	Guidelines for Surveys, Assessment and Repair of Hull Structure	
Part 1	**Cargo hold region**	**Example No.**
Area 2	**Side structure**	**1**
Detail of damage	Fracture in side shell frame at lower bracket	

Sketch of damage

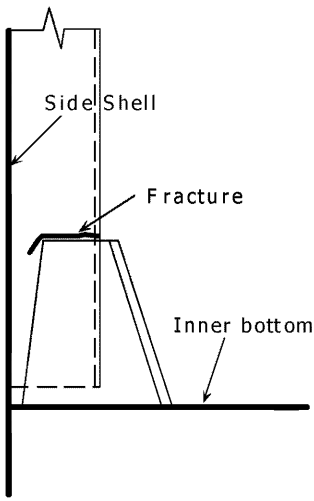

Sketch of repair

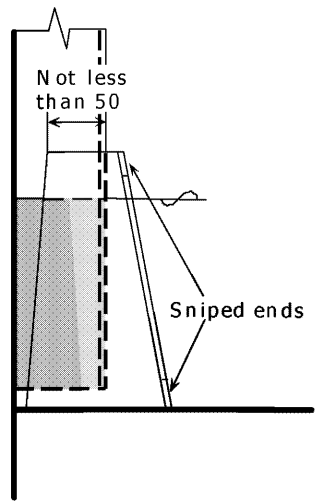

Notes on possible cause of damage

1. This type of damage is caused due to stress concentration.

Notes on repairs

1. For small fractures, e. g. hairline fractures, the fracture can be veed-out, welded up, ground, examined by NDT for fractures, and rewelded.
2. For larger/significant fractures consideration is to be given to cropping and partly renewing/ renewing the frame brackets. If renewing the brackets, end of frames can be sniped to soften them.
3. If felt prudent, soft toes are to be incorporated at the boundaries of the bracket to the inner bottom plating.

GENERAL CARGO SHIPS	Guidelines for Surveys, Assessment and Repair of Hull Structure	
Part 1	**Cargo hold region**	**Example No.**
Area 2	**Side structure**	**2**
Detail of damage	Fractures in side shell frame/lower bracket and side shell plating near tank top	

Sketch of damage

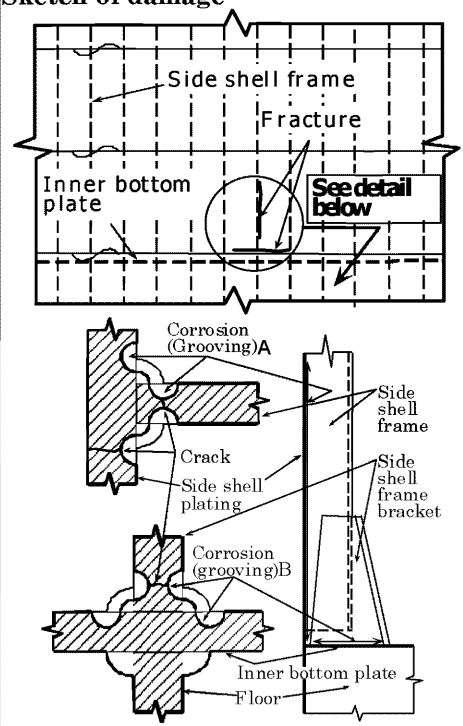

Sketch of repair

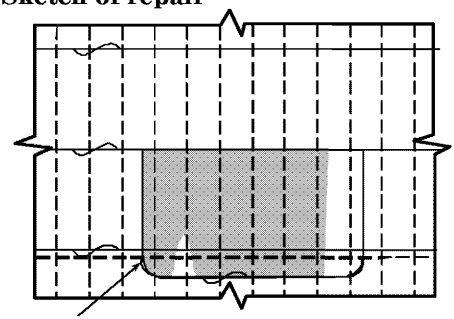

Notes on possible cause of damage

1. Fracture in side shell plating along side shell frame: Heavy corrosion (grooving) along side shell frame (See A).
2. Fracture in side shell plating along tank top: Heavy corrosion (grooving) along tank top (See B) resulting detachment of side shell frame bracket from inner bottom plating.

Notes on repairs

1. Sketch of repair applies when damage extends over several frames.
2. Isolated fractures may be repaired by veeing-out and rewelding.
3. Isolated cases of grooving may be repaired by build up of welding.

GENERAL CARGO SHIPS	Guidelines for Surveys, Assessment and Repair of Hull Structure	
Part 1	**Cargo hold region**	**Example No.**
Area 2	**Side structure**	**3**
Detail of damage	Adverse effect of corrosion on the frame of forward/afterward hold	

Sketch of damage

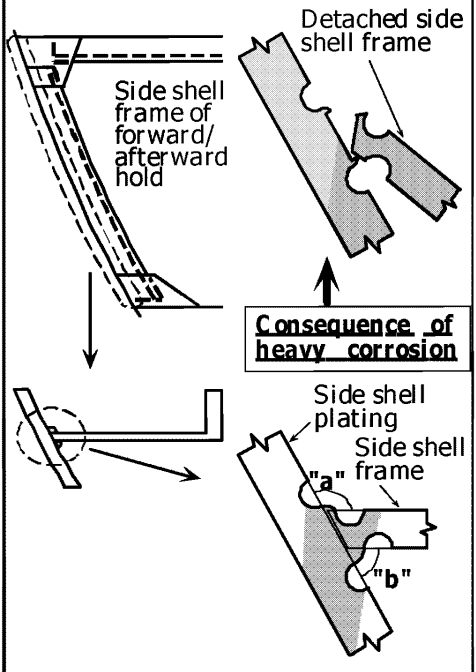

Sketch of repair

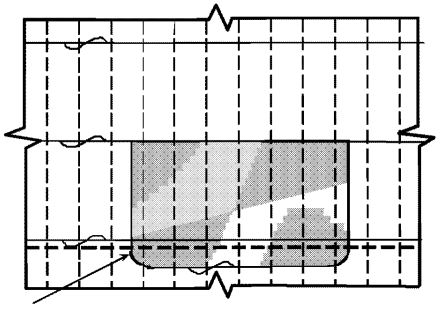

1. Part renewal including side shell frames and inner bottom plating, as found necessary
2. Deep penetration welding at the connections of side shell frames to side shell plating

Notes on possible cause of damage

1. Heavy corrosion (grooving) of side shell frame along side shell plating and difference of throat thickness "**a**" from "**b**".
   (Since original throat thickness of "**a**" is usually smaller than that of "**b**", if same welding procedure is applied, the same corrosion has a more severe effect on "**a**", and may cause collapse and/or detachment of side shell frame.)

Notes on repairs

1. Sketch of repair applies when damage extends over several frames.
2. Isolated fractures may be repaired by veeing-out and rewelding.
3. Isolated cases of grooving may be repaired by build up of welding.

GENERAL CARGO SHIPS	Guidelines for Surveys, Assessment and Repair of Hull Structure	
Part 1	**Cargo hold region**	**Example No.**
Area 2	**Side structure**	**4**
Detail of damage	Fractures at the supporting brackets in way of the collision bulkhead, (with no side shell panting stringers fitted in hold)	

Sketch of damage

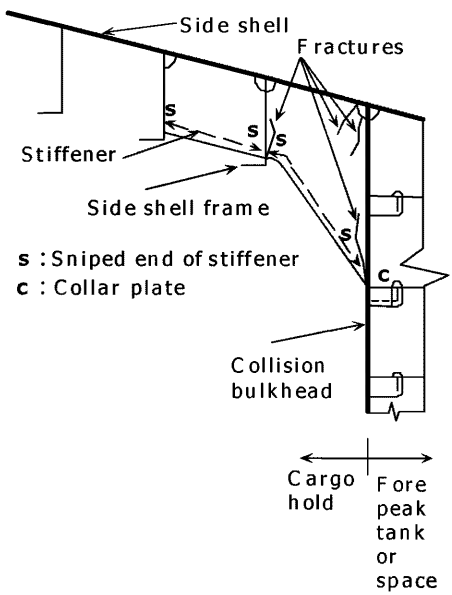

Sketch of repair

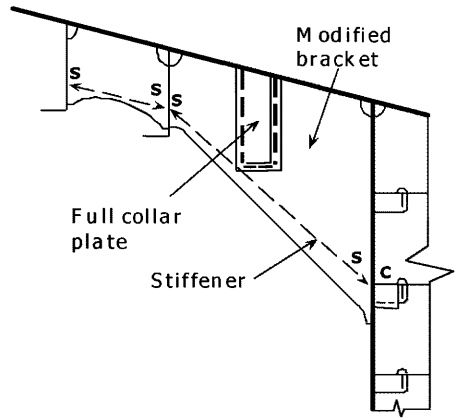

Notes on possible cause of damage

1. Insufficient bracket size resulting in high stress due to load cantilevered from side frame.
2. Stress concentration at toe of bracket and misalignment between bracket and stringer in fore peak tank or space.

Notes on repairs

1. The extended bracket arm connection to the collision bulkhead is to have a soft toe, and any cut-outs for stiffeners in the fore peak tank or space are to be collared when situated in the vicinity of the bracket toe.
2. When fractures have extended into the side shell or bulkhead plating, the plating is to be cropped and part renewed.

GENERAL CARGO SHIPS	Guidelines for Surveys, Assessment and Repair of Hull Structure	
Part 1	**Cargo hold region**	**Example No.**
Area 2	**Side structure**	**5**
Detail of damage	Fractures in way of continuation /extension brackets in aftermost hold at the engine room bulkhead	

Sketch of damage

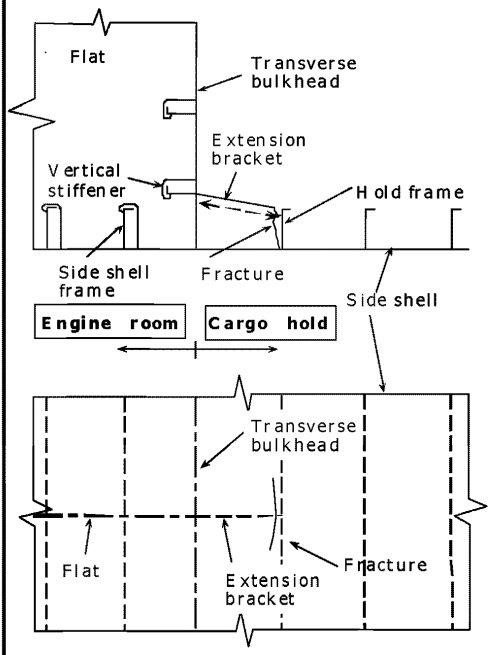

Sketch of repair

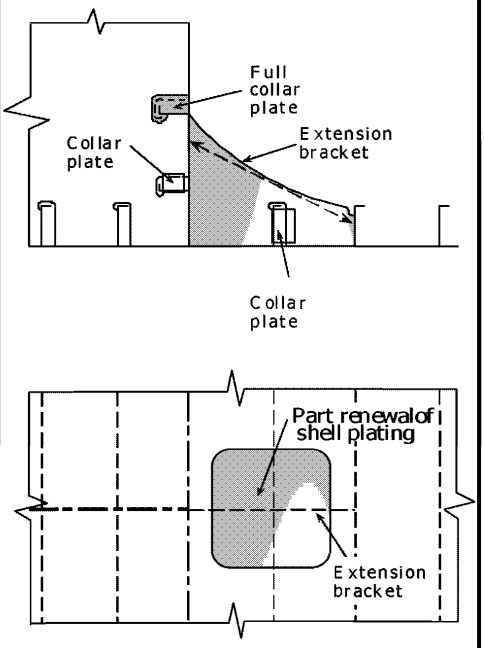

Notes on possible cause of damage

1. Damage caused by stress concentration leading to fatigue fracture on side shell. This will be exacerbated because of the greater flexibility of the hold structure in relation to the engine room structure.

Notes on repairs

1. The fractured shell plating is to be cropped and part renewed as
2. necessary.
   Extension bracket is to be modified and collar plates to cut-outs in engine room flat are to be installed.

GENERAL CARGO SHIPS	Guidelines for Surveys, Assessment and Repair of Hull Structure	
Part 1	**Cargo hold region**	**Example No.**
Area 2	**Side structure**	**6**
Detail of damage	Fractures in way of continuation/extension brackets at the end of deep cargo tank	

Sketch of damage

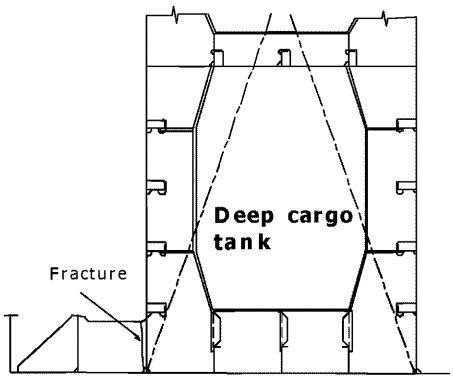

Sketch of repair

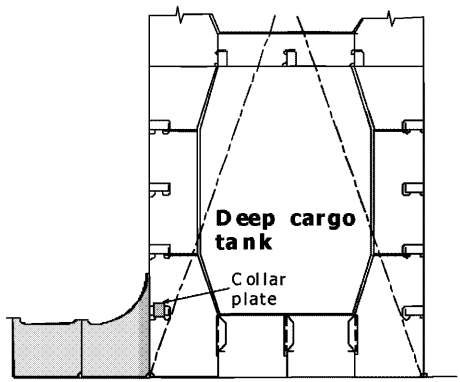

Notes on possible cause of damage

1. Damage caused by stress concentration leading to fatigue fracture on side shell. This will be exacerbated because of the greater flexibility of the ordinary hold structure in relation to the deep cargo tank structure.

Notes on repairs

1. The fractured shell plate is to be cropped and part renewed as necessary.
2. Brackets should be modified.

Area 3 Transverse bulkhead structure

Contents

1 General

2 What to look for
2.1 Material wastage
2.2 Deformations
2.3 Fractures

3 General comments on repair
3.1 Material wastage
3.2 Deformations
3.3 Fractures

Figures and/or Photographs - Area 3	
No.	Title
Figure 1	Transverse bulkhead - Potential problems areas

Examples of structural detail failures and repairs - Area 3	
Example No.	Title
1	Corrosion along inner bottom or tween deck plating
2	Shear buckling in transverse bulkhead

1 General

1.1 Watertight transverse bulkheads are usually plane bulkheads stiffened vertically.

1.2 The opportunity is taken to emphasize that for ordinary transverse watertight bulkheads, in addition to withstanding water pressure in an emergency situation, i.e. flooding, the bulkhead structures constitute main structural strength elements in the structural design of the intact ship. Ensuring that acceptable strength is maintained for these structures is therefore of major importance.

The structure may sometimes appear to be in good condition when it is in fact excessively corroded. In view of this, appropriate access arrangements as indicated in **Chapter 4 Survey planning, preparation and execution** of the guidelines, should be provided to enable a proper close-up inspection and thickness measurement (See **Figure 1**).

1.3 Deformation of the plating may lead to the failure and collapse of the bulkhead under water pressure in an emergency situation.

1.4 It is important to realize that in the event of one hold flooding, the transverse watertight bulkheads should prevent progressive flooding and possible consequent sinking.

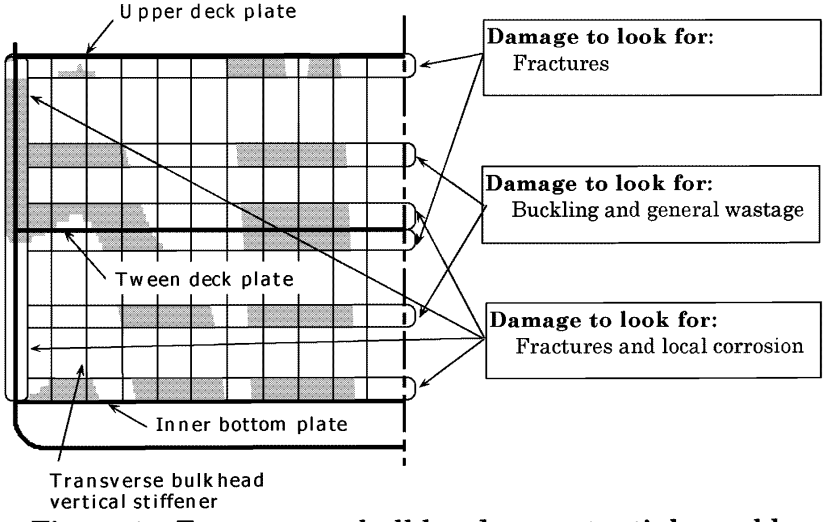

Figure 1 Transverse bulkhead - potential problem areas

2 What to look for

2.1 Material wastage

2.1.1 Excessive corrosion, in particular at the bottom of the bulkheads. This is created by the corrosive effect of cargo and environment, in particular when the structure is not coated.

2.1.2 If coatings have broken down and there is evidence of corrosion, it is recommended that random thickness measurements be taken to establish the level of diminution.

2.1.3 Where the terms and requirements of the periodical survey dictate thickness measurement, or when the Surveyor deems necessary, it is important that the extent of the gauging be sufficient to determine the general condition of the structure.

2.2 Deformations

2.2.1 Deformation due to mechanical damage is often found in bulkhead structure.

2.2.2 When the bulkhead has sustained serious uniform corrosion, the bulkhead may suffer shear buckling. Evidence of buckling may be indicated by the peeling of paint or rust. Where, however, deformation resulting from bending or shear buckling has occurred on a bulkhead with a small diminution in thickness, this could be due to poor design or overloading and this aspect should be investigated before proceeding with repairs.

2.3 Fractures

2.3.1 Fractures occur at the boundaries of bulkheads, particularly in way of tank top and side shell.

3 General comments on repair

3.1 Material wastage

3.1.1 When the scantlings of transverse watertight bulkheads have reached the diminution levels permitted by the Classification Society involved, the wasted plating and stiffeners are to be cropped and renewed.

3.3 Deformations

3.3.1 If the deformation is local and of a limited extent, it could generally be faired out. Deformed plating in association with a generalized reduction in thickness should be partly or completely renewed.

3.3.2 Buckling of the bulkhead plating can also occur in way of the side shell resulting from contact damage and this is usually quite obvious. In such cases the damaged area is to be cropped and partly renewed. If the deformation is extensive, replacement of the plating, partly or completely, may be necessary. If the deformation is not in association with generalized reduction in thickness or due to excessive loading, additional strengthening should be considered.

3.2 Fractures

3.2.1 Fractures that occur at the boundary weld connections as a result of latent weld defects should be veed-out, appropriately prepared and re-welded preferably using low hydrogen electrodes or equivalent.

3.2.2 For fractures other than described in **3.2.1** re-welding may not be a permanent solution and an attempt should be made to improve the design and construction in order to obviate a recurrence.

GENERAL CARGO SHIPS	Guidelines for Surveys, Assessment and Repair of Hull Structure	
Part 1	**Cargo hold region**	**Example No.**
Area 3	**Transverse bulkhead structure**	**1**
Detail of damage	Corrosion along inner bottom or tween deck plating	

Sketch of damage

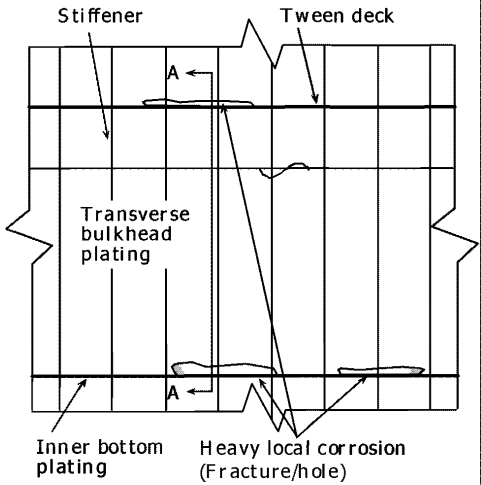

Note: Regarding "**View A-A**", refer to **Example 2** of **Area 2** of this part

Sketch of repair

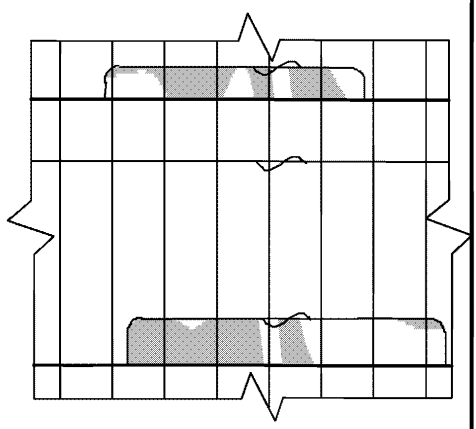

Notes on possible cause of damage

1. Heavy corrosion including grooving along inner bottom plating or tween deck due to poor drainage.

Notes on repairs

1. The extent of the renewal should be determined carefully. If the renewal plate (original thickness) is welded to thin plate (corroded plate), it may cause stress concentration and cause
2. fracture.
   Protective coating should be applied.

GENERAL CARGO SHIPS	Guidelines for Surveys, Assessment and Repair of Hull Structure	
Part 1	**Cargo hold region**	**Example No.**
Area 3	**Transverse bulkhead structure**	**2**
Detail of damage	Buckling in transverse bulkhead	

Sketch of damage

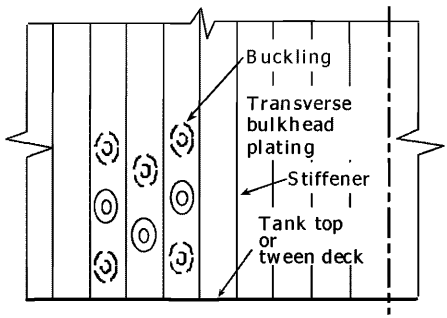

Sketch of repair

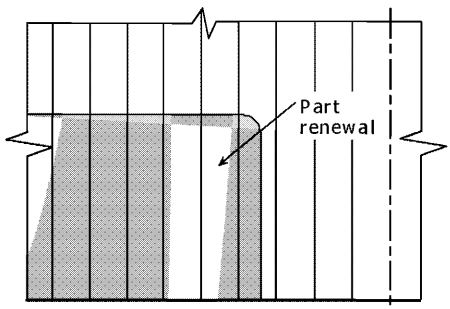

Notes on possible cause of damage

1. Heavy general corrosion.

Notes on repairs

1. The extent of the renewal should be determined carefully. If the renewal plating (original thickness) is welded to thin plating (corroded plating), it may cause stress concentration and fracture.
2. Protective coating should be applied.

Area 4 Tween deck structure

Contents

1 General

2 What to look for
2.1 Material wastage
2.2 Deformations
2.3 Fractures

3 General comments on repair
3.1 Material wastage
3.2 Deformations
3.3 Fractures

Examples of structural detail failures and repairs - Area 4	
Example No.	**Title**
1	Sagging of deck panel/buckling of cantilever beam

1 General

1.1 A main design principle of the tween deck is to provide easy access to cargo stowed on and underneath the deck. Therefore obstructions such as hatch coamings and deep under deck supporting girders, are usually avoided. The tween deck's main structure consists of cantilever beams supported only by the ship's side structure and cantilever girders supported only by the transverse bulkhead structure (cantilever girders). In some cases the structure may be additionally supported by pillars.

1.2 The design of the tween deck makes it particularly vulnerable to excess loads of cargo and cargo inertia forces in extreme weather conditions.

2 What to look for

2.1 Material wastage

2.1.1 Heavy wastage along the boundaries at ship's sides and at transverse bulkheads may occur as a result of seawater accumulated from wet cargo due to poor drainage. Such damages are related to those suffered at the lower end of side structures and transverse bulkhead structures (See **Area 2**, **Example 2** and **Area 3**, **Example 1**).

2.2 Deformations

2.2.1 Deformed structure may be observed near hatch openings where cargo and/ or hatch cover pontoons may have bumped into the structure during lift on or lift off operations.

2.2.2 Sagging of plate panels may be caused by lateral overloading as a consequence of excessive cargo loads, improper distribution /support of cargo loads, excessive inertia forces imposed by the cargo in extreme weather conditions, or a combination of these causes. It is essential that an under-deck inspection also be carried out to assess the extent of such damage (See **Example 1**). If the tween deck is supported by pillars, excessive loads could be transmitted to the double bottom structure (inner bottom plating, floors, girders) which could be damaged. Therefore inspection of double bottom tanks may be necessary (See **Area 5**, **Example 2**).

2.3 Fractures

2.3.1 Fatigue fractures are not a common problem on tween decks due to the generally low level of dynamic forces. Fractures may, however, occur in combination with corrosion and deformations described above.

3 General comments on repair

3.1 Material wastage

3.1.1 Where parts of the tween deck plating have corroded to the permissible minimum thickness the normal practice is to crop and renew the area affected. Surveyors should request that adjacent areas that remain

marginally within the allowable limit should also be renewed. It is recommended that repaired areas be coated.

3.2 Deformations

3.2.1 For deformations caused by abusive handling or obvious overloading, the damaged structure should be cropped and renewed to original scantlings.

3.2.2 If the cause of the deformations is not clear and design weakness is suspected, an appropriate reinforcement is to be considered in addition to cropping and renewal of the damaged part.

3.3 Fractures

3.3.1 The proposed repair for corrosion and deformations described above also apply when associated fractures occur.

GENERAL CARGO SHIPS	Guidelines for Surveys, Assessment and Repair of Hull Structure	
Part 1	**Cargo hold region**	**Example No.**
Area 4	**Tween deck structure**	**1**
Detail of damage	Sagging of deck panel/buckling of cantilever beam	

Sketch of damage

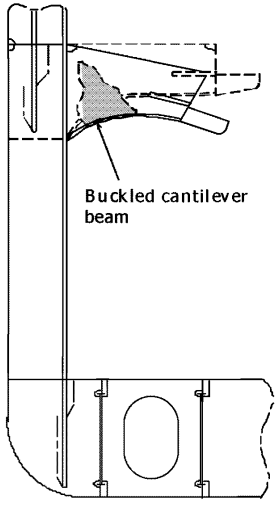

Sketch of repair

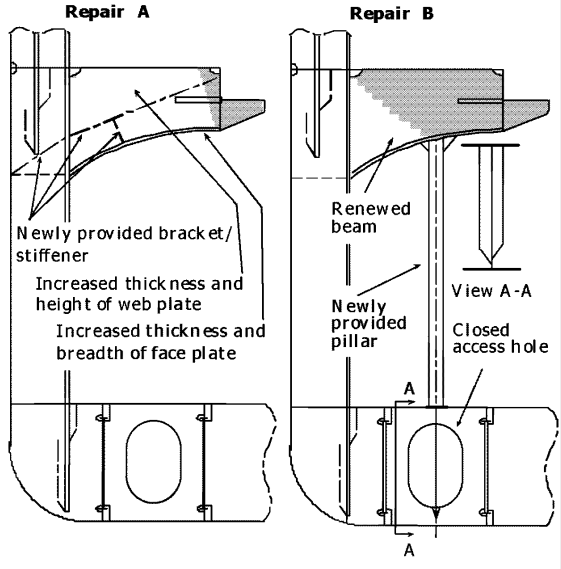

Notes on possible cause of damage

1. Poor design, overloading and/or excessive inertia force caused in heavy weather.

Notes on repairs

1. The affected structures are to be cropped and renewed.
2. **Repair A**:
   Reinforcement should be considered by increased scantlings of beam and/or additional stiffeners.
3. **Repair B**:
   Pillars may be provided for reinforcement subject to the approval of the owner. In such a case, reinforcement of the floor under the pillar should be considered. (In the above example, access hole was closed.)

Area 5 Double bottom structure

Contents

1 General

2 What to look for - Tank top inspection
2.1 Material wastage
2.2 Deformations
2.3 Fractures

3 What to look for - Double bottom tank inspection
3.1 Material wastage
3.2 Deformations
3.3 Fractures

4 What to look for - External bottom inspection
4.1 Material wastage
4.2 Deformations
4.3 Fractures

5 General comments on repair
5.1 Material wastage
5.2 Deformations
5.3 Fractures

Figures and/or Photographs - Area 5	
No.	Title
Photograph 1	Fractured inner bottom plating due to heavy corrosion on both sides
Photograph 2	Grooving corrosion of welding of bottom plating
Photograph 3	Section of the grooving shown in Photograph 2

Examples of structural detail failures and repairs - Area 5	
Example No.	Title
1	Fractures in inner bottom plating around container bottom pocket
2	Dented inner bottom plating and buckled/fractured floor under pillar
3-a	Fractures at the connection of bottom/inner bottom longitudinal to floor stiffener

Examples of structural detail failures and repairs - Area 5	
Example No.	**Title**
3-b	Fractures at the connection of bottom/inner bottom longitudinal to floor stiffener
4	Fractures and buckling in way of a cut-out for the passage of a longitudinal through a transverse primary member
5	Fractures in bottom shell plating/inner bottom plating at the corner of drain hole/air hole in longitudinal
6	Fracture in bottom shell plating along side girder and/or bottom longitudinal
7	Fracture in bottom plating below suction head
8	Fracture in shell plating at the termination of bilge keel

1 General

1.1 Double bottom structure is subjected to longitudinal hull girder bending, caused by cargo distribution and wave action. It is also subjected to longitudinal and transverse local bending due to the effects of cargo load from the inside in association with the counteracting forces from the outside. The double bottom structure is also subjected to the effects of cargo loading and unloading. The double bottom structure forward may also be subjected to increased dynamic forces due to slamming.

2 What to look for - Tank top inspection

2.1 Material wastage

2.1.1 The general condition with regard to corrosion of the tank top structure may be observed by visual inspection. The level of wastage of tank top plating may have to be established by means of thickness measurement. Special attention should be given to the intersection of the tank top with the side shell and transverse bulkheads where water may have accumulated and consequently accelerated the rate of corrosion.

2.1.2 When the tank top plating has been covered with dunnage or ceiling the plating may have suffered heavy corrosion, due to high humidity, and lack of proper maintenance (See **Photograph 1**).

2.1.3 The bilge wells should be cleaned and inspected closely since heavy pitting corrosion may have occurred due to accumulated water in the wells. Special attention should be paid to the plating in way of the bilge suction and sounding pipes.

2.1.4 Special attention should also be paid to areas where pipes penetrate the tank top.



Photograph 1
Fractured inner bottom plating due to heavy corrosion on both sides

2.2 Deformations

2.2.1 Buckling of the tank top plating may occur between longitudinals in areas subject to in-plane transverse compressive stresses or between floors in areas

subject to in-plane longitudinal compressive stresses.

2.2.2 Deformed structures may be observed in areas of the tank top due to overloading of cargo, impact of cargo during loading/unloading operations, or the use of mechanical unloading equipment.

2.2.3 Deformations may also occur at the heel of pillars fitted to support the tween deck structure (See **Example 2**).

2.2.4 Whenever deformations are observed on the tank top, further inspection in the double bottom tanks is imperative in order to determine the extent of the damage. The deformation may cause the breakdown of coating, if fitted, within the double bottom, which in turn may lead to accelerated corrosion rate in these unprotected areas.

2.3 Fractures

2.3.1 Fractures will normally be found by close-up inspection paying particular attention to the boundary connections of the tank top and to penetrations through the tank top (See **Example 1**).

2.3.2 Fractures that extend through the thickness of the plating or through the boundary welds may be observed during pressure testing of the double bottom tanks.

3 What to look for - Double bottom tank inspection

3.1 Material wastage

3.1.1 The level of wastage of double bottom internal structure (longitudinals, frames, floors, girders, etc.) may have to be established by means of thickness measurements. The combined effects of the marine environment, the carriage of seawater ballast, cyclical loading etc. may result in high corrosion rates.

3.1.2 If the protective coating is not properly maintained, structure in the ballast tank may suffer heavy corrosion. Upper part of the structure of double bottom tanks usually has more severe corrosion than the lower part.

3.1.3 Corrosion in the structure of ballast tanks near heated fuel tanks may be accelerated by the high temperature due to heated fuel oil. The rate of corrosion depends on several factors such as:

- Temperature and heat input to the ballast tank.
- Condition of original coating and its maintenance. (It is preferable for applying the protective coating of ballast tank at the building of the ship, and for subsequent maintenance, that the stiffeners on the boundaries of the fuel tank be fitted within the fuel tank instead of the ballast tank).
- Ballasting frequency and operations.
- Age of ship and associated stress levels as corrosion reduces the thickness of the structural elements and can result in fracturing and buckling.

3.1.4 Shell plating localized wear is caused by erosion and cavitation of the fluid flowing through the suction head. In addition, the suction head will be

positioned in the lowest part of the tank and water/mud will cover the area even when the tank is empty. The condition of the shell plating may be established by feeling by hand beneath the suction head. When in doubt, the lower part of the suction head should be removed and thickness measurements taken. If the vessel is docked, the thickness can be measured from below. If the distance between the suction head and the underlying shell plating is too small to permit access, the suction head should be dismantled. The shell plating below the sounding pipe should also be carefully examined. When a striking plate has not been fitted or is worn out, heavy corrosion can be caused by the striking of the weight of the sounding tape (See **Example 2** in **Part 3**).

3.2 Deformations

3.2.1 Deformations may occur due to the overloading of the cargo, dynamic forces due to slamming in the forward part of the vessel, or from the impact of cargo loading/unloading. Special attention should be paid to those areas of deformation identified during the tank top or external bottom inspections. Deformations in the structure not only reduce the strength of the structure but may also cause breakdown of the coating, leading to accelerated corrosion.

3.3 Fractures

3.3.1 Fractures may be caused by the cyclic deflection of the double bottom induced by repeated loading from the sea or due to poor "through-thickness" properties of the plating. Scallops in the bottom girders can create areas of stress concentrations which further increase the risk of fractures.

4 What to look for - External bottom inspection

4.1 Material wastage

4.1.1 Hull structure below the water line can usually be inspected only when the ship is dry-docked. Therefore, the structure should be inspected carefully, taking into account the period until the next scheduled dry-docking. The level of wastage of the bottom plating may have to be established by means of thickness measurements.

4.1.2 Severe grooving along welding of bottom plating is often found (See **Photographs 2** and **3**). This grooving can be accelerated by poor maintenance of the protective coating and/or sacrificial anodes fitted to the bottom plating.

4.1.3 Bottom or "docking" plugs should be carefully examined for excessive corrosion along the edge of the weld connecting the plug to the bottom plating.

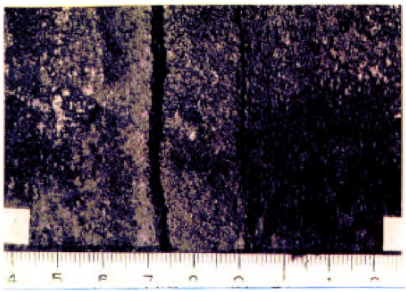

Photograph 2
Grooving corrosion of welding of bottom plating

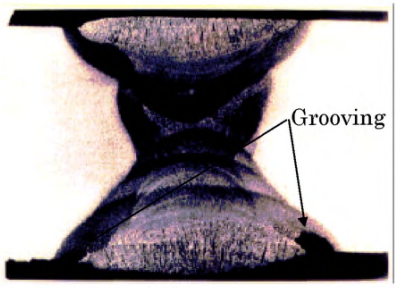

Photograph 3
Section of the grooving shown in Photograph 2

4.2 Deformations

4.2.1 Buckling of the bottom shell plating may occur between longitudinals or floors in areas subject to in-plane compressive stresses (either longitudinally or transversely). Deformations may also be attributed to slamming due to wave action in the forward part of the vessel, or contact with an underwater object. When deformation of the shell plating is found, the area should be inspected internally. Even if the deformation is small, the internal structure may have suffered serious damage.

4.3 Fractures

4.3.1 The bottom shell plating should be inspected when it has dried since fractures in shell plating may be easily detected if water comes out of the fracture in clear contrast to the dry shell plating. Therefore if the ship has been inspected while wet, it is recommended that the ship be inspected again when dry.

4.3.2 Fractures in butt welds and fillet welds (particularly at the wrap around at scallops and ends of bilge keels) are sometimes observed and may propagate into the bottom plating. The cause of the fractures in butt welds is usually a weld defect or grooving. If the bilge keels are divided at the block joints of hull, all ends of the bilge keels are to be inspected.

5 General comments on repair

5.1 Material wastage

5.1.1 In general, where the tank top, double bottom internal structure, and bottom shell plating have wasted to the allowable level, the normal practice is to crop and renew the affected area. Where possible, plate renewals should be for the full width of the plate but in no case should they be less than 450mm in width to avoid build up of residual stresses due to welding. Repair work in double bottom will require careful planning, accessibility, and gas freeing of fuel oil tanks. Doubler plates are not to be used for compensation of wasted plates.

5.1.2 Plating below suction heads and sounding pipes is to be replaced if the

average thickness is below the acceptable limit for replacement (See **Example 7**). When scattered deep pitting is found it may be repaired by welding.

5.2 Deformations

5.2.1 Extensive deformation should be corrected by replacement of the tank top and bottom shell plating, and the deformed portion of affected girders or floors. If there is no evidence that the deformation was caused by grounding or other excessive local loading, or that it is associated with excessive wastage, additional internal stiffening may need to be provided. In this regard, the Classification Society concerned should be contacted.

5.3 Fractures

5.3.1 Fractures of a minor nature may be veed-out and rewelded. Where cracking is more extensive, the structure is to be cropped and renewed.

5.3.2 For fractures caused by the cyclic deflection of the double bottom, reinforcement of the structure may be required in addition to cropping and renewal of the fractured part.

5.3.3 For fractures due to poor through thickness properties of the plating, cropping and renewal with steel having adequate through thickness properties is an acceptable solution.

5.3.4 Damaged bilge keels must be promptly repaired if there is distortion or fractures. Since the bilge keel is subjected to the same longitudinal stress level as the bilge plating, propagation of fractures into the shell could result in a serious failure. Fractured butt welds should be repaired using full penetration welds and proper welding procedures.

5.3.5 Ends of bilge keels require internal support. This should be taken into account when cropping a damaged part of a bilge keel (See **Example 8**).

GENERAL CARGO SHIPS	Guidelines for Surveys, Assessment and Repair of Hull Structure	
Part 1	**Cargo hold region**	**Example No.**
Area 5	**Double bottom structure**	**1**
Detail of damage	Fractures in inner bottom plating around container bottom pocket	

Sketch of damage

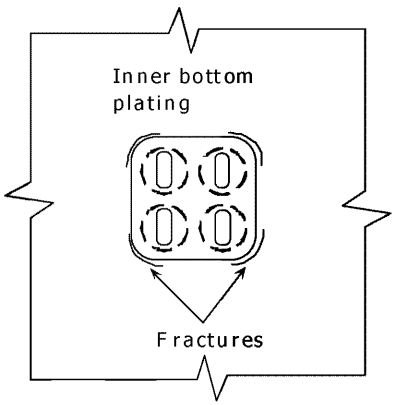

Sketch of repair

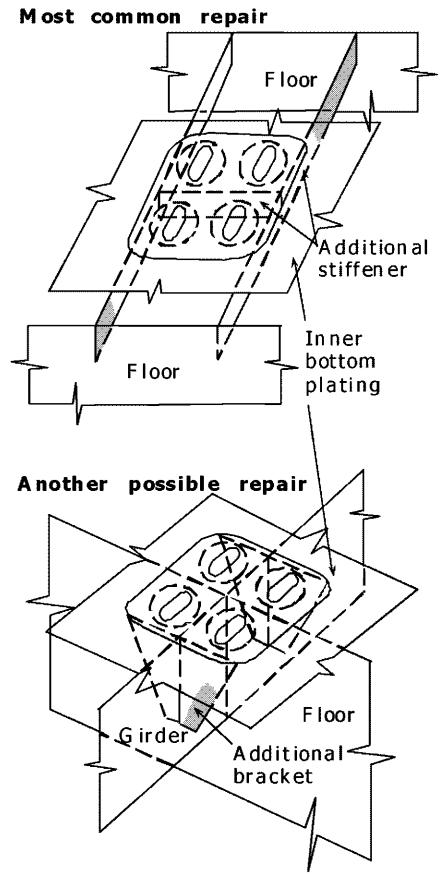

Notes on possible cause of damage

1. Pocket is not supported correctly by floor, longitudinal and/or stiffener.

Notes on repairs

1. Fractured plating should be cropped and part renewed.
2. Adequate reinforcement should be considered.

GENERAL CARGO SHIPS	Guidelines for Surveys, Assessment and Repair of Hull Structure	
Part 1	**Cargo hold region**	**Example No.**
Area 5	**Double bottom structure**	**2**
Detail of damage	Dented inner bottom plating and buckled/fractured floor under pillar	

Sketch of damage

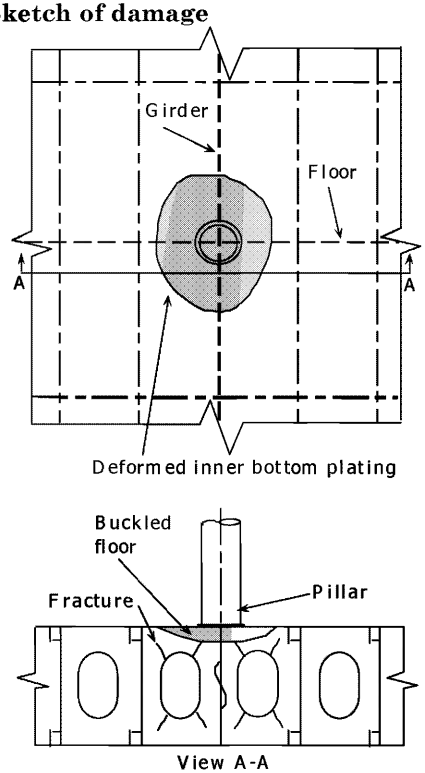

Sketch of repair

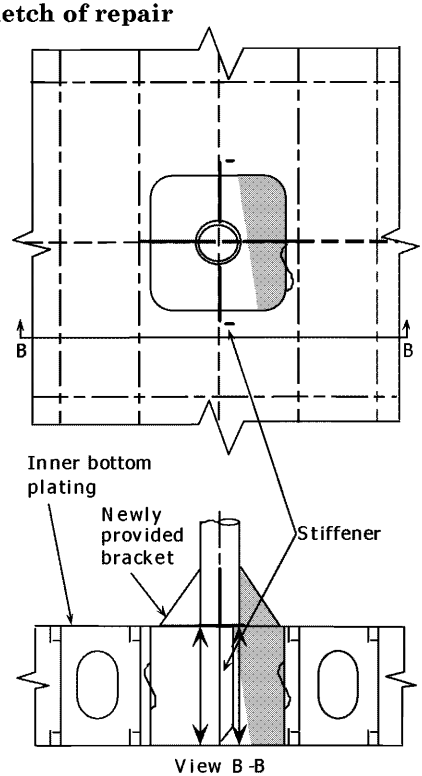

Notes on possible cause of damage

1. Inadequate arrangement and/or reinforcement of access holes.
2. Excessive deck-loading on tween deck.

Notes on repairs

1. Dented inner bottom plating is to be cropped and part renewed.
2. The fractured floor is to be cropped and part renewed.
3. Access holes should be closed by insert plates.
4. Stiffener on floor/girder and/or brackets should be considered. (Fitting of brackets in the hold is subject to the agreement of the owner.)

GENERAL CARGO SHIPS	Guidelines for Surveys, Assessment and Repair of Hull Structure	
Part 1	**Cargo hold region**	**Example No.**
Area 5	**Double bottom structure**	**3-a**
Detail of damage	Fractures at the connection of bottom/inner bottom longitudinal to floor stiffener	

Sketch of damage

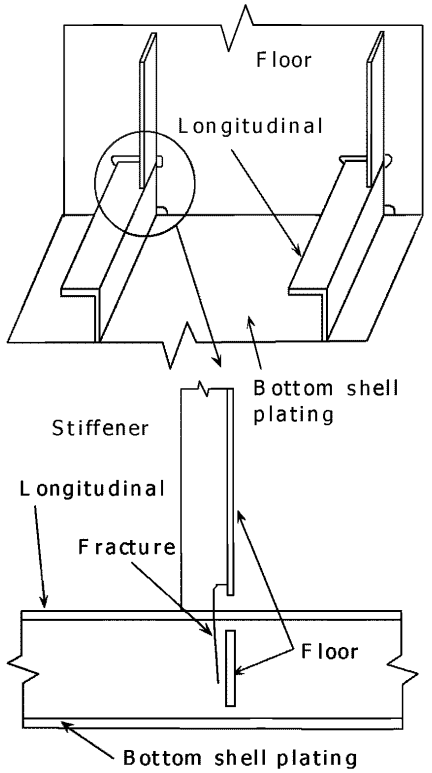

Note: same damage may occur at similar connection to inner bottom plating

Sketch of repair

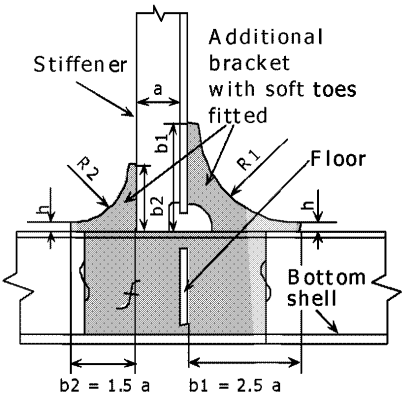

f: Where required, the longitudinal to be cropped and part renewed

1. For a slope at toes max. 1 : 3, R1 = (b1-h) x 1.6 and R2 = (b2-h) x 1.6
2. Soft toe bracket to be welded first to longitudinal
3. Scallop in bracket to be as small as possible, recommended max. 35 mm
4. If toes of brackets are ground smooth, full penetration welds in way to be provided
5. Maximum length to thickness ratio = 50 : 1 for unstiffened bracket edge
6. Toe height, h, to be as small as possible (10- 15 mm)

Notes on possible cause of damage

1. Damage can be caused by stress concentrations leading to accelerated fatigue in this region.

Notes on repairs

1. If fracture extends to over one third of the depth of the longitudinal, then crop and part renew. Otherwise the fracture can be veed-out and welded.

GENERAL CARGO SHIPS	Guidelines for Surveys, Assessment and Repair of Hull Structure	
Part 1	**Cargo hold region**	**Example No.**
Area 5	**Double bottom structure**	**3-b**
Detail of damage	Fractures at the connection of bottom/inner bottom longitudinal to floor stiffener	

Sketch of damage

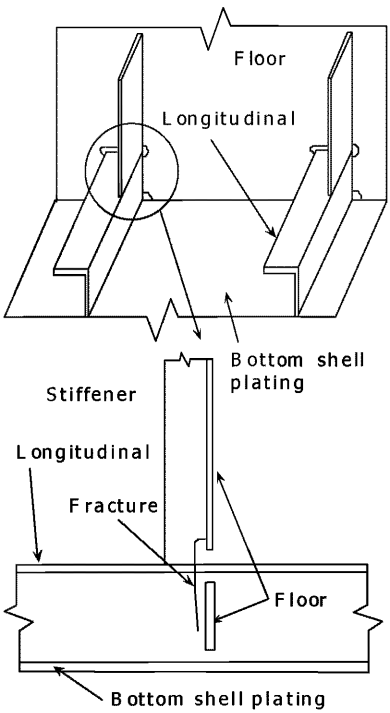

Note: same damage may occur at similar connection to inner bottom plating

Sketch of repair

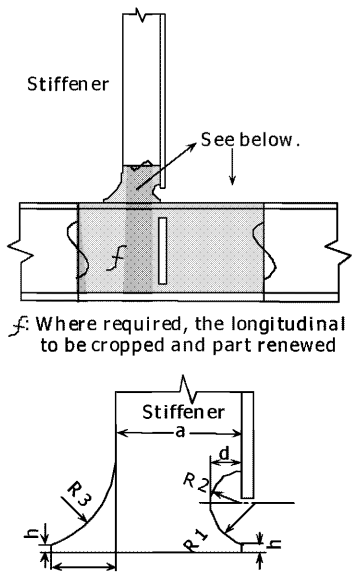

f: Where required, the longitudinal to be cropped and part renewed

Various cut-out shapes have been developed. The following is one example.

1. Toe height as small as possible (h = 10 - 15 mm)
2. Depth "d" of key hole notch as small a possible, max. 30 mm
3. For a slope at toe max. 1 : 3
4. R1 = 1.5d, R2 = d and R3 = 1.5c

Notes on possible cause of damage

1. Damage can be caused by stress concentrations leading to accelerated fatigue in this region.

Notes on repairs

1. If fracture extends to over one third of the depth of the longitudinal, then crop and part renew. Otherwise the fracture can be veed-out and welded.

GENERAL CARGO SHIPS	Guidelines for Surveys, Assessment and Repair of Hull Structure	
Part 1	**Cargo hold region**	**Example No.**
Area 5	**Double bottom structure**	**4**
Detail of damage	Fractures and buckling in way of a cut-out for the passage of a longitudinal through a transverse primary member	

Sketch of damage

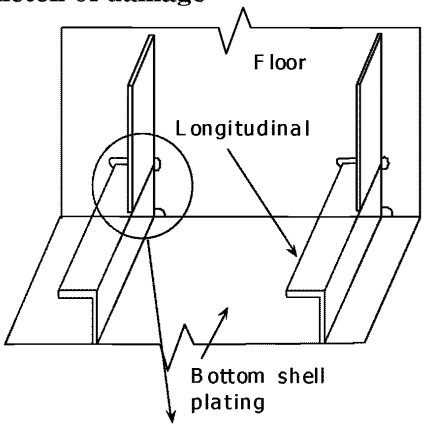

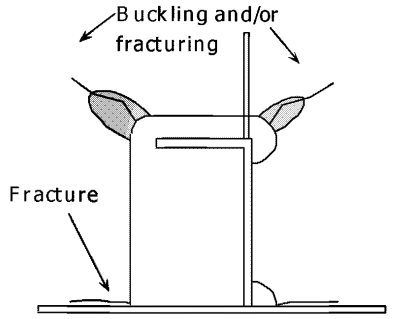

Note: same type of damage may occur at similar connections to inner bottom

Sketch of repair

Repair A

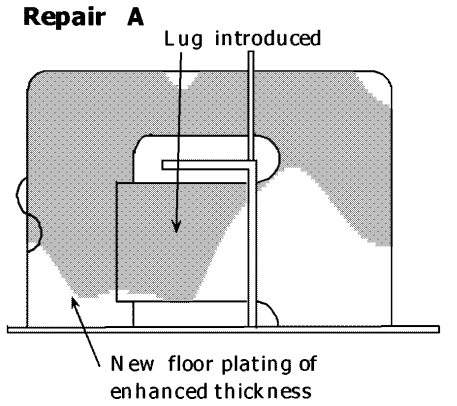

Repair B

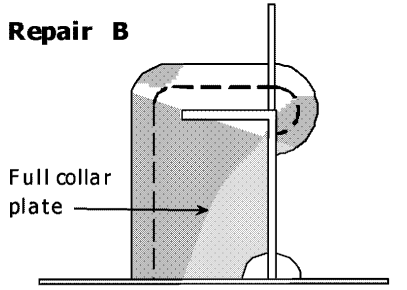

Notes on possible cause of damage

1. Damage can be caused by general levels of corrosion and presence of stress concentration associated with the presence of a cut-out.

Notes on repairs

1. If fractures are significant then crop and part renew the floor plating otherwise the fracture can be veed-out and welded provided the plating is not generally corroded.
2. **Repair B** is to be incorporated if the lug proves to be ineffective.

GENERAL CARGO SHIPS	Guidelines for Surveys, Assessment and Repair of Hull Structure	
Part 1	**Cargo hold region**	**Example No.**
Area 5	**Double bottom structure**	**5**
Detail of damage	Fractures in bottom shell plating/inner bottom plating at the corner drain hole/air hole in longitudinal	

Sketch of damage

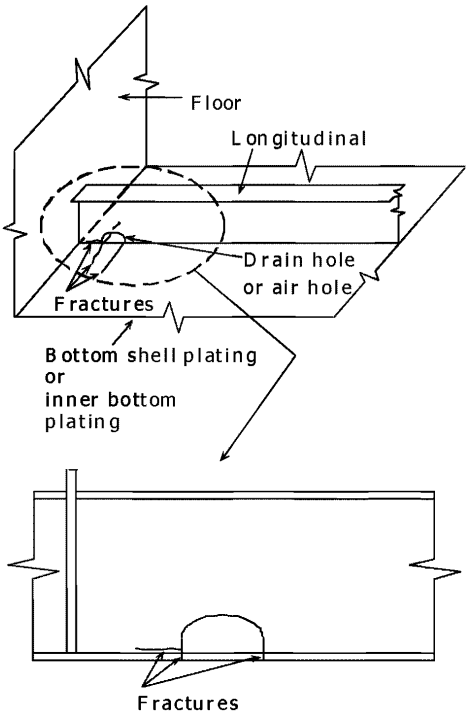

Sketch of repair

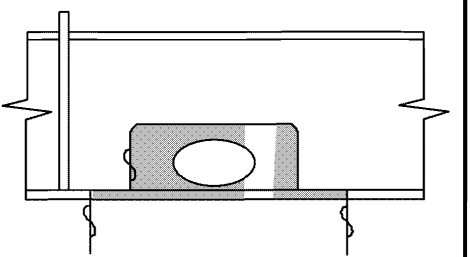

Notes on possible cause of damage

1. Stress concentration and/or corrosion due to stress concentration at the corner of drain hole/air hole.

Notes on repairs

1. Fractured plating should be cropped and part renewed.
2. If fatigue life is to be improved, change of drain hole/air hole shape is to be considered.

GENERAL CARGO SHIPS	Guidelines for Surveys, Assessment and Repair of Hull Structure	
Part 1	**Cargo hold region**	**Example No.**
Area 5	**Double bottom structure**	**6**
Detail of damage	Fracture in bottom shell plating along side girder and/or bottom longitudinal	

Sketch of damage

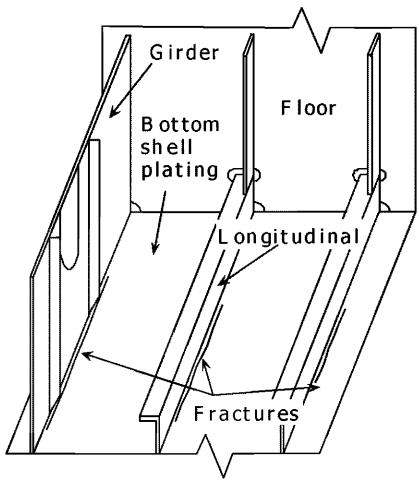

Sketch of repair

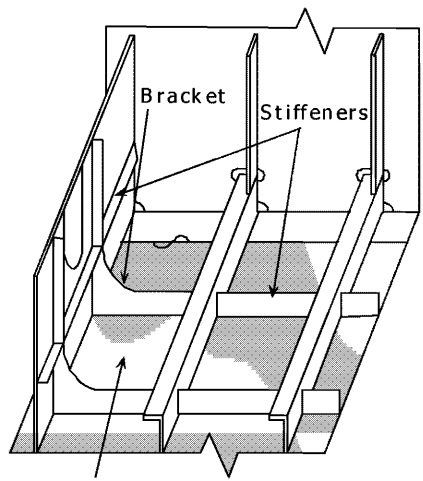

Notes on possible cause of damage

1. Vibration.

Notes on repairs

1. Fractured bottom shell plating should be cropped and renewed.
2. Natural frequency of the panel should be changed, e.g. reinforcement by additional stiffener/bracket.

GENERAL CARGO SHIPS	Guidelines for Surveys, Assessment and Repair of Hull Structure	
Part 1	**Cargo hold region**	**Example No.**
Area 5	**Double bottom structure**	**7**
Detail of damage	Corrosion in bottom plating below suction head	

Sketch of damage

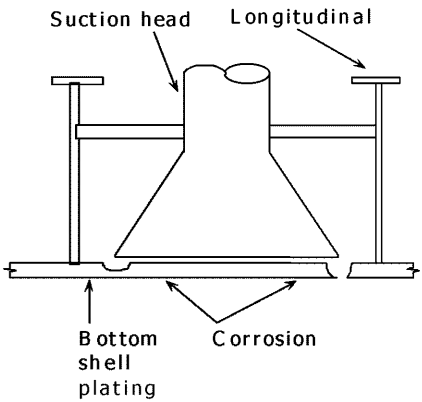

Sketch of repair

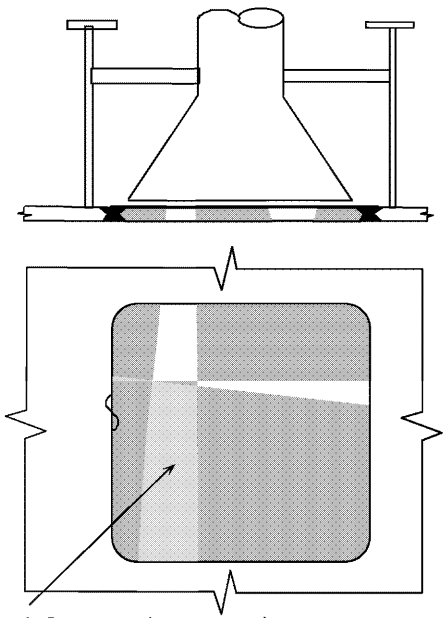

1. Insert to have round corners
2. Non-destructive examination to be applied after welding based on the Society's rules

Notes on possible cause of damage

1. High flow rate associated with insufficient corrosion prevention
2. system.
   Galvanic action between dissimilar metals

Notes on repairs

1. Affected plating should be cropped and part renewed. Thicker plate and suitable beveling should be considered.
2. If the corrosion is limited to a small area, i.e. pitting corrosion, repair by welding is acceptable.

GENERAL CARGO SHIPS	Guidelines for Surveys, Assessment and Repair of Hull Structure	
Part 1	**Cargo hold region**	**Example No.**
Area 5	**Double bottom structure**	**8**
Detail of damage	Fracture in shell plating at the termination of bilge keel	

Sketch of damage

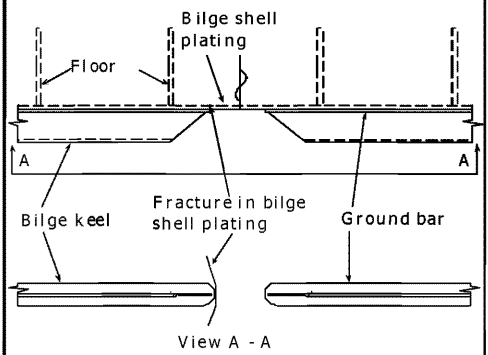

Sketch of repair

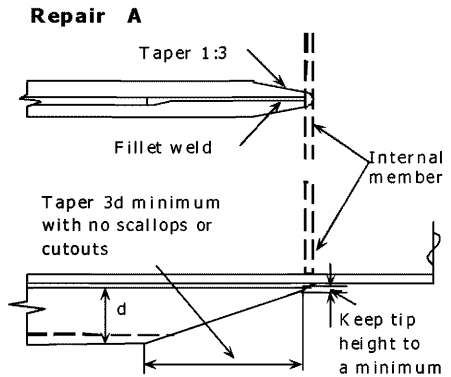

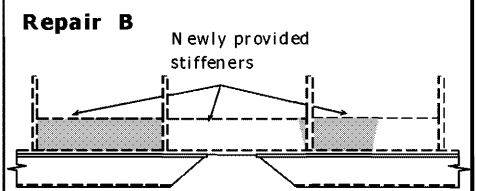

Notes on possible cause of damage

1. Poor design causing stress concentration.

Notes on repairs

1. Fractured plating is to be cropped and renewed.
2. Reduction of stress concentration of the bilge keel end should be considered.
   Repair A: Modification of the detail of end
   Repair B: New internal stiffeners
3. Instead of **Repair A** or **B** continuous ground bar and bilge keel should be considered.

Part 2 Fore and aft end regions

Contents

Area 1 - Fore end structure
Area 2 - Aft end structure
Area 3 - Stern frame, rudder arrangement and propeller shaft supports

---

Area 1 Fore End Structure

Contents

1 General

2 What to look for
2.1 Material wastage
2.2 Deformations
2.3 Fractures

3 General comments on repair
3.1 Material wastage
3.2 Deformations
3.3 Fractures

Figures and/or Photographs - Area 1	
No.	Title
Figure 1	Fore end structure - Potential problem areas

Examples of structural detail failures and repairs - Area 1	
Example No.	Title
1	Fracture and deformation of bow transverse web in way of cut-outs for side longitudinals
2	Fracture at toe of web frame bracket connection to stringer platform bracket
3	Fracture in side shell plating in way of chain locker
4	Deformation of forecastle deck
5	Deformation of side shell plating in way of forecastle space
6	Fracture in forecastle deck plating at bulwark

1 General

1.1 Due to the environmental conditions, wastage of the internal structure of the fore peak tank can be a major problem for many, and in particular ageing, general cargo ships. Corrosion may be accelerated in the cases of uncoated tanks or where the coating has not been maintained, and can lead to fractures of the internal structure, and the tank boundaries.

1.2 Deformation can be caused by contact which may result in damage to the internal structure and lead to fractures in the shell plating.

1.3 Fractures to the internal structure in the fore peak tank and spaces can also result from wave impact load due to slamming/panting.

1.4 Forecastle structure is exposed to severe environments and suffers damage, such as deformation of deck structure, deformation and fracture of bulwarks and collapse of masts, etc.

1.5 Shell plating around anchor and hawse pipe may have corrosion, deformation and possible fracture due to movement of improperly stowed anchor.

2 What to look for

2.1 Material wastage

2.1.1 Wastage (and possible subsequent fractures) is more likely to show initially in locations as indicated in **Figure 1**. A close-up inspection should be carried out. In addition, a representative selection of thickness measurements should be taken with particular attention being given to locations such as chain lockers.

2.1.2 Structure in chain lockers is liable to have heavy corrosion because of mechanical damage to the protective coating by anchor chains. In some ships, e.g. relatively small ships, side shell plating may form boundaries of the chain lockers. Consequently, heavy corrosion may result in a hole in the side shell plating.

2.2 Deformations

2.2.1 Contact with quaysides, etc. can result in large deformations and fractures of the internal structure. This may affect the watertight integrity of the tank boundaries and collision bulkhead. A close-up examination of the damaged area should be carried out.

2.3 Fractures

2.3.1 Fractures in the fore peak tank are normally found by close-up inspection of the internal structure.

2.3.2 Fractures that extend through the thickness of the plating or through the boundary welds may be observed during pressure testing of the double bottom tanks.

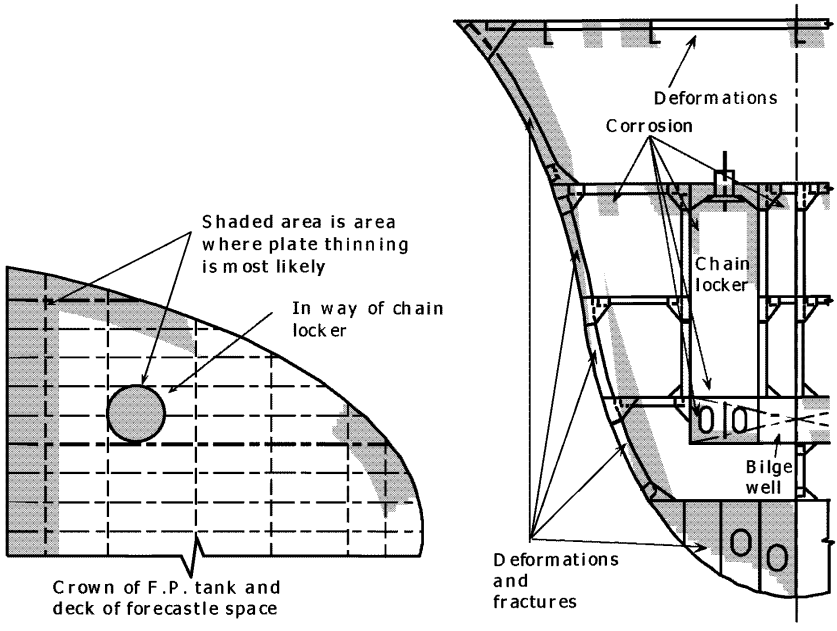

(a) plan **(b) Section**

Figure 1 Fore end structure - Potential problem areas

3 General comments on repair

3.1 Material wastage

3.1.1 The necessary extent of steel renewal can be established when comparing the measured thickness to the original values, or the minimum acceptable values for this part of the structure. The repair work in the tank will require planning, to permit accessibility.

3.2 Deformations

3.2.1 Deformed structure caused by contact should be cropped and part renewed or faired in place depending on the nature and extent of damage.

3.3 Fractures

3.3.1 In the case of fractures caused by sea-loads the structure should be cropped and renewed. Increased thickness of plating and/or design modification to reduce stress concentrations should be considered (See **Examples 1**, **2** and **6**).

GENERAL CARGO SHIPS	Guidelines for Surveys, Assessment and Repair of Hull Structure	
Part 2	**Fore and aft end regions**	**Example No.**
Area 1	**Fore end structure**	**1**
Detail of damage	Fracture and deformation of bow transverse web in way of cut-outs for side longitudinals	

Sketch of damage

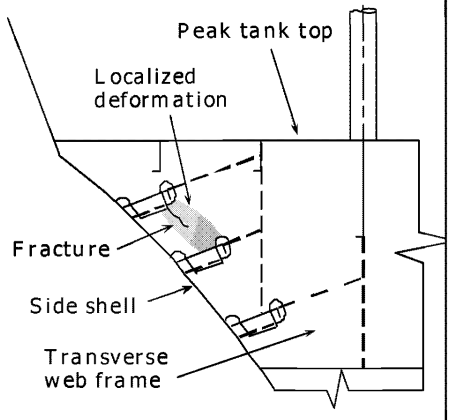

Sketch of repair

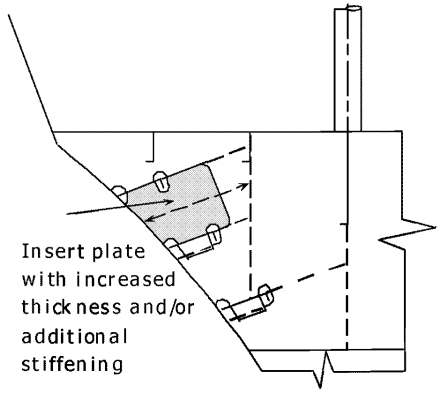

Notes on possible cause of damage

1. Localized material wastage in way of coating failure at cut-outs and sharp edges due to working of the structure.
2. Dynamic seaway loading in way of bow flare.

Notes on repairs

1. Sufficient panel strength to be provided to absorb the dynamic loads enhanced by bow flare shape.

GENERAL CARGO SHIPS	Guidelines for Surveys, Assessment and Repair of Hull Structure	
Part 2	**Fore and aft end regions**	**Example No.**
Area 1	**Fore end structure**	**2**
Detail of damage	Fracture at toe of web frame bracket connection to stringer platform bracket	

Sketch of damage

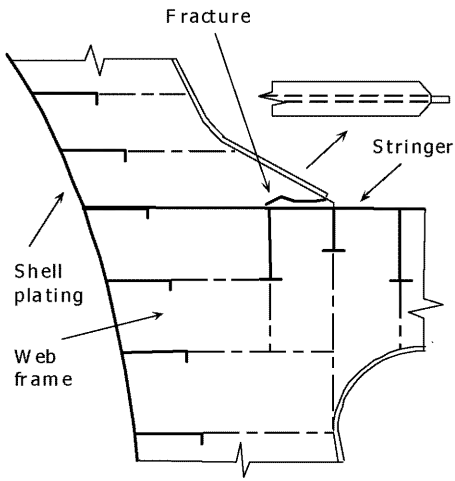

Sketch of repair

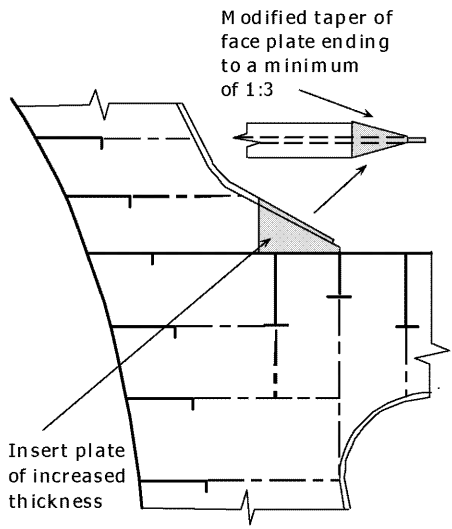

Notes on possible cause of damage

1. Inadequate bracket forming the web frame connection to the stringer.
2. Localized material wastage in way of coating failure at bracket due to flexing of the structure.
3. Dynamic seaway loading in way of bow flare.

Notes on repairs

1. Adequate soft nose bracket endings with a face plate taper of at least 1 : 3 to be provided.

GENERAL CARGO SHIPS	Guidelines for Surveys, Assessment and Repair of Hull Structure	
Part 2	**Fore and aft end regions**	**Example No.**
Area 1	**Fore end structure**	**3**
Detail of damage	Fracture in side shell plating in way of chain locker	

Sketch of damage

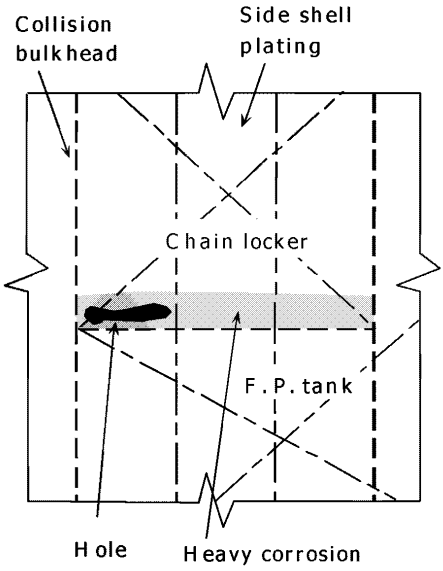

Sketch of repair

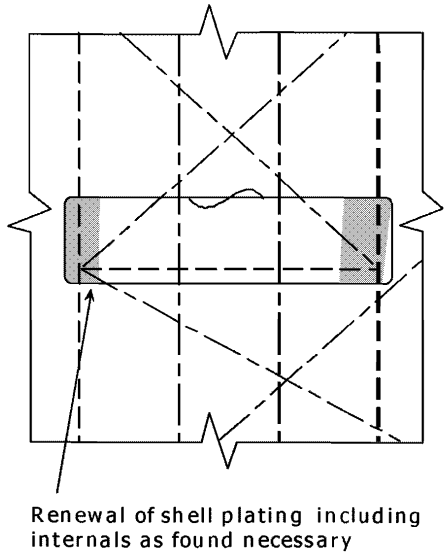

Notes on possible cause of damage

1. Heavy corrosion in region where mud is accumulated.

Notes on repairs

1. Corroded plating should be cropped and renewed.
2. Protective coating should be applied.

GENERAL CARGO SHIPS	Guidelines for Surveys, Assessment and Repair of Hull Structure	
Part 2	**Fore and aft end regions**	**Example No.**
Area 1	**Fore end structure**	**4**
Detail of damage	Deformation of forecastle deck	

Sketch of damage

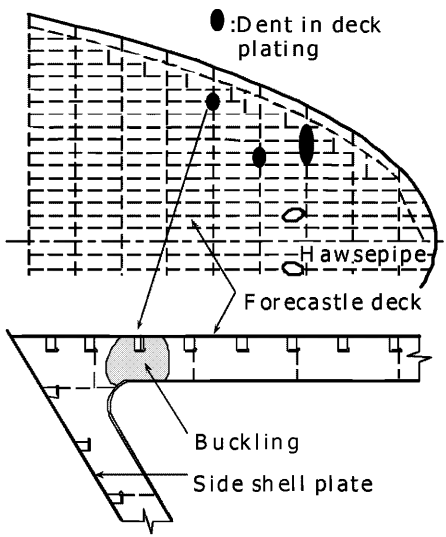

Sketch of repair

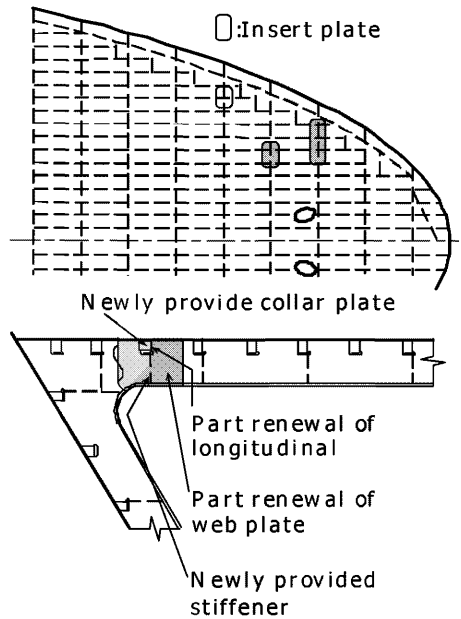

Notes on possible cause of damage

1. Green sea on deck.
2. Insufficient strength.

Notes on repairs

1. Deformed structure should be cropped and renewed.
2. Additional stiffeners on web of beam should be considered for reinforcement.

GENERAL CARGO SHIPS	Guidelines for Surveys, Assessment and Repair of Hull Structure	
Part 2	**Fore and aft end regions**	**Example No.**
Area 1	**Fore end structure**	**5**
Detail of damage	Deformation of side shell plating in way of forecastle space	

Sketch of damage

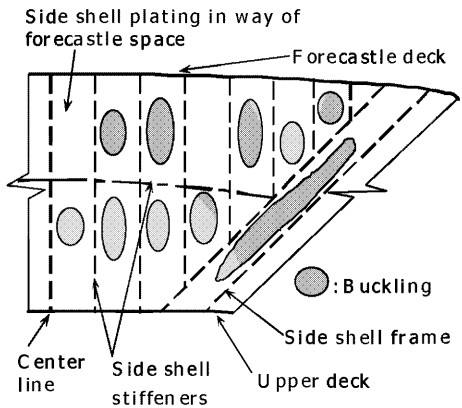

Sketch of repair

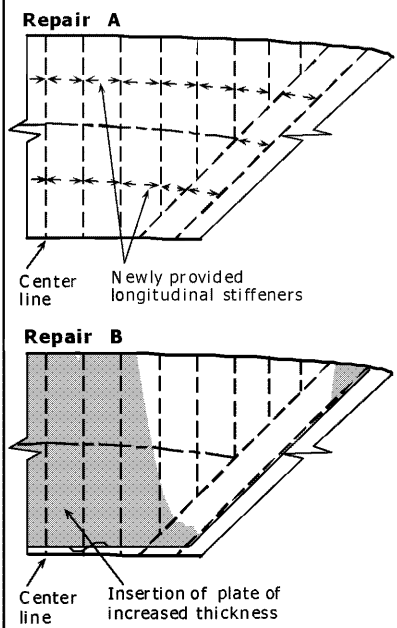

Notes on possible cause of damage

1. Heavy weather.
2. Insufficient strength.

Notes on repairs

1. Deformed part should be cropped and part renewed.
2. **Repair A**
   Additional stiffeners between existing stiffeners should be considered.
   Repair B
   Insertion of plate of increased thickness with additional stiffeners

GENERAL CARGO SHIPS	Guidelines for Surveys, Assessment and Repair of Hull Structure	
Part 2	**Fore and aft end regions**	**Example No.**
Area 1	**Fore end structure**	**6**
Detail of damage	Fracture in forecastle deck plating at bulwark	

Sketch of damage

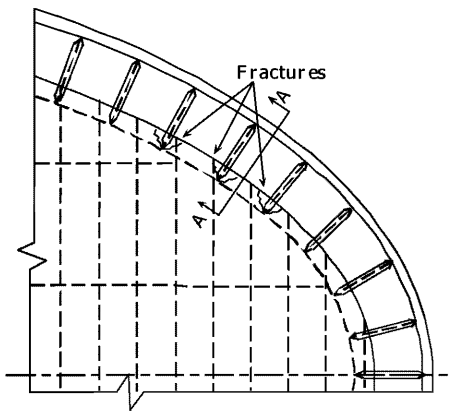

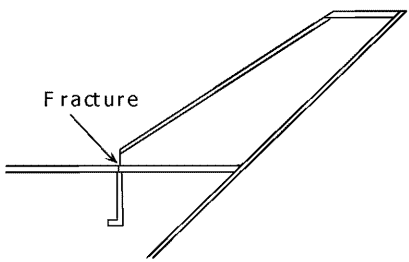

View A-A

Sketch of repair

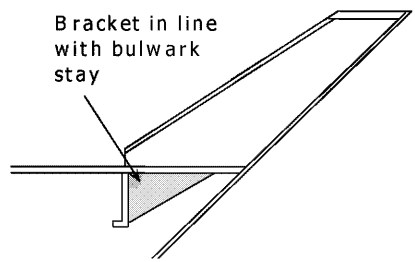

View A-A

Notes on possible cause of damage

1. Bow flare effect in heavy weather.
2. Stress concentration due to poor design.

Notes on repairs

1. Fractured deck plating should be cropped and renewed.
2. Bracket in line with the bulwark stay to be fitted to reduce stress concentration.

Area 2 Aft end structure

Contents

1 General

2 What to look for
2.1 Material wastage
2.2 Deformations
2.3 Fractures

3 General comments on repair
3.1 Material wastage
3.2 Deformations
3.3 Fractures

Figures and/or Photographs - Area 2	
No.	**Title**
Figure 1	Aft end structure - Potential problem areas

Examples of structural detail failures and repairs - Area 2	
Example No.	**Title**
1	Fractures in longitudinal bulkhead in way of rudder trunk
2	Fractures at the connection of floors and girder/side brackets
3-a	Fractures in flat where rudder carrier is installed in steering gear room
3-b	Fractures in steering gear foundation brackets and deformed deck plate

1 General

1.1 Due to environmental conditions, wastage of the internal structure of the aft peak tanks can be a major problem for many, and in particular ageing, general cargo ships. Wastage may be found to be accelerated in the case of uncoated tanks or where the coating has not been maintained, and can lead to fractures of the internal structure, and the tanks boundaries.

1.2 Deformation can be caused by contact or due to wave impact from astern which can result in damage to the internal structure and lead to fractures in the shell plating.

1.3 Fractures to the internal structure in the aft peak tank and spaces can also result from main engine and propeller excited vibration.

2 What to look for

2.1 Material wastage

2.1.1 Wastage (and possible subsequent fractures) is more likely to show initially in locations as indicated in **Figure 1**. A close-up inspection should be carried out. In addition, a representative selection of thickness measurements should be taken with particular attention being given to locations such as bunker tank boundaries and spaces adjacent to heated engine rooms.

2.2 Deformations

2.2.1 Contact with quaysides etc. can result in large deformations and fractures of the internal structure. This may affect the watertight integrity of the tank boundaries and bulkheads. A close-up examination of the damaged area should be carried out.

2.3 Fractures

2.3.1 Fractures in floor connection welds and in other locations in the aft peak tanks and rudder trunk spaces are normally found by close-up inspection.

2.3.2 The structure supporting the rudder carrier may fracture and/or deform due to the rudder having suffered excessive loads. Bolts connecting the rudder carrier to the steering gear flat may also be damaged due to such loads.

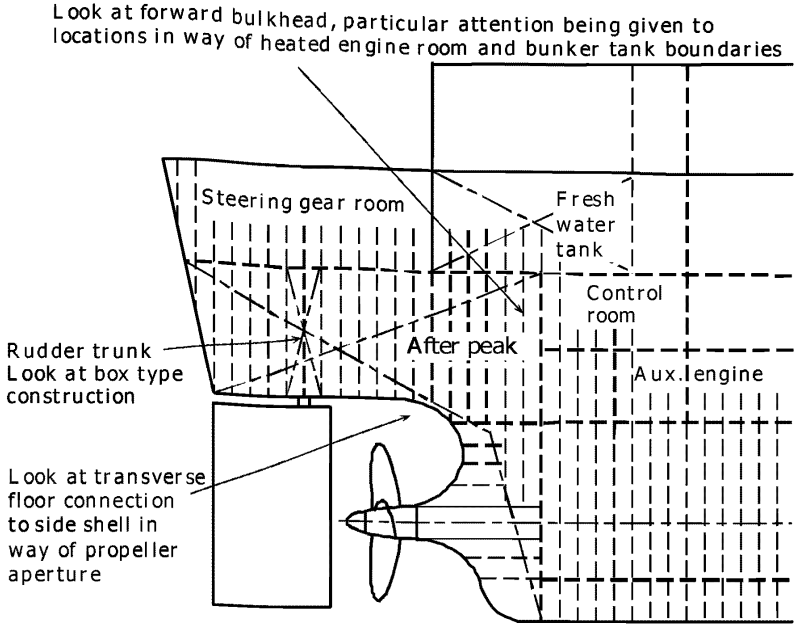

Figure 1 Aft end structure - Potential problem areas

3 General comments on repair

3.1 Material wastage

3.1.1 The necessary extent of steel renewal can be established when comparing the measured thickness to the original values, or the minimum acceptable values for this part of the structure. The repair work in the peak tanks will require planning to permit accessibility.

3.2 Deformations

3.2.1 Deformed structure caused by contact should be cropped and part renewed or faired in place depending on the extent of damage.

3.3 Fractures

3.3.1 Repairs of main engines and propeller excited vibration damage should be made by returning the structure to its original condition. In order to prevent recurrence of the damage the cause of the vibration should be ascertained and additional reinforcements provided as found necessary (See **Examples 1** and **2**).

3.3.2 Fractured structure which supports the rudder carrier is to be cropped and renewed, and may have to be reinforced (See **Example 3**).

GENERAL CARGO SHIPS	Guidelines for Surveys, Assessment and Repair of Hull Structure	
Part 2	**Fore and aft end regions**	**Example No.**
Area 2	**Aft end structure**	**1**
Detail of damage	Fractures in bulkhead in way of rudder trunk	

Sketch of damage

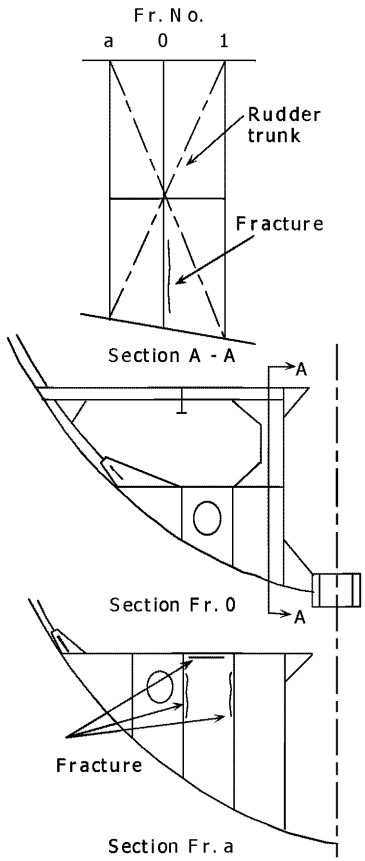

Sketch of repair

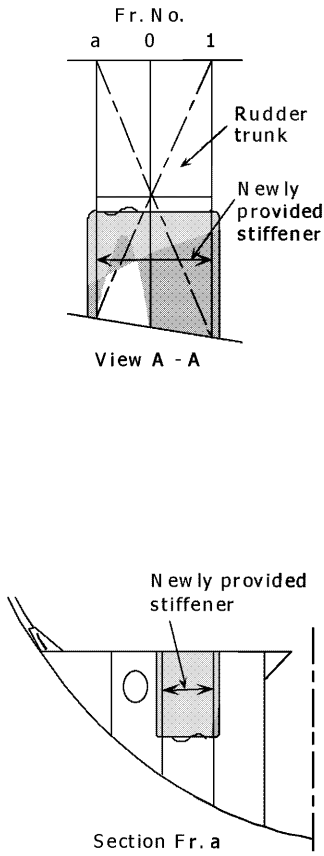

Notes on possible cause of damage

1. Vibration.

Notes on repairs

1. The fractured plating should be cropped and renewed.
2. Natural frequency of the plate between stiffeners should be changed, e.g. reinforcement by additional stiffeners.

GENERAL CARGO SHIPS	Guidelines for Surveys, Assessment and Repair of Hull Structure	
Part 2	**Fore and aft end regions**	**Example No.**
Area 2	**Aft end structure**	**2**
Detail of damage	Fractures at the connection of floors and girders/side brackets	

Sketch of damage

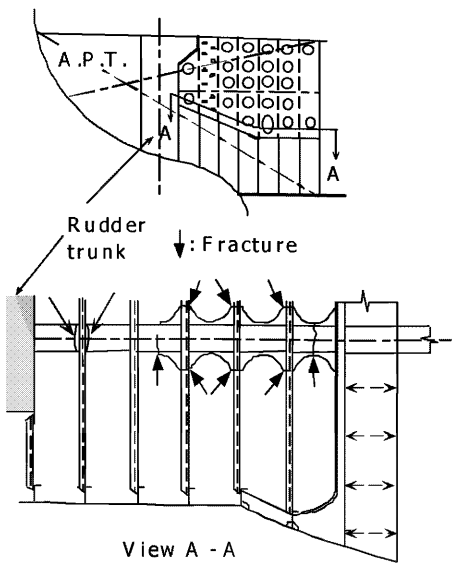

Sketch of repair

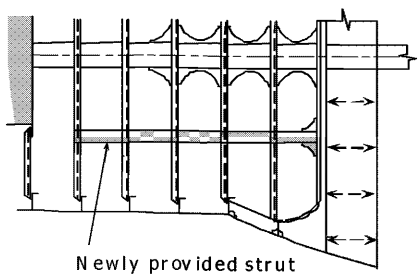

Notes on possible cause of damage

1. Vibration.

Notes on repairs

1. The fractured plating should be cropped and renewed.
2. Natural frequency of the panel should be changed, e.g. reinforcement by additional strut.

GENERAL CARGO SHIPS	Guidelines for Surveys, Assessment and Repair of Hull Structure	
Part 2	**Fore and aft end regions**	**Example No.**
Area 2	**Aft end structure**	**3-a**
Detail of damage	Fracture in flat where rudder carrier is installed in steering gear room	

Sketch of damage

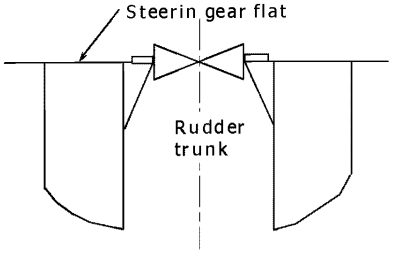

View A - A

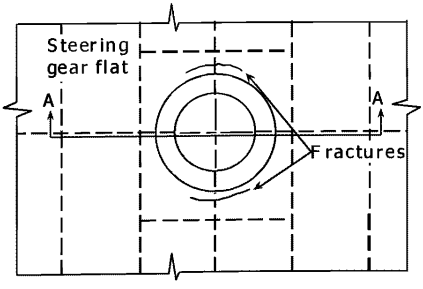

Sketch of repair

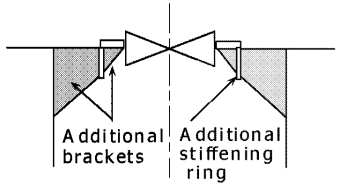

View B - B

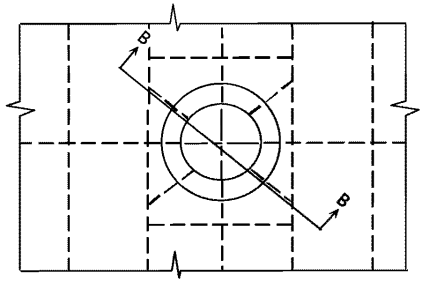

Notes on possible cause of damage

1. Inadequate design.

Notes on repairs

1. Fractured plating should be cropped and renewed.
2. Additional brackets and stiffening ring should be fitted for reinforcement.

GENERAL CARGO SHIPS	Guidelines for Surveys, Assessment and Repair of Hull Structure	
Part 2	**Fore and aft end regions**	**Example No.**
Area 2	**Aft end structure**	**3-b**
Detail of damage	Fractures in steering gear foundation brackets and deformed deck plate	

Sketch of damage

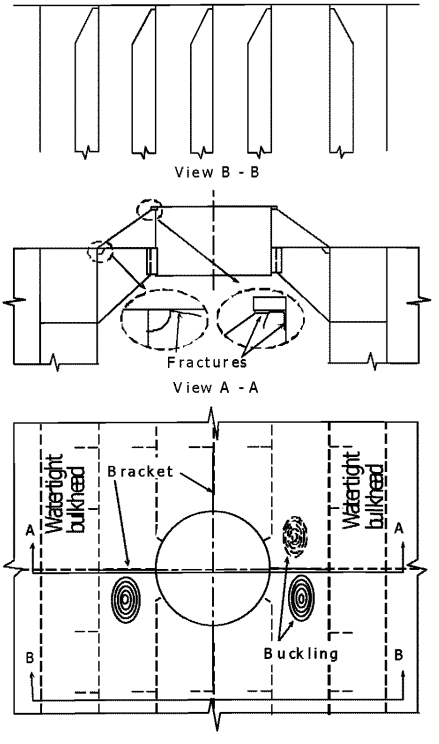

Sketch of repair

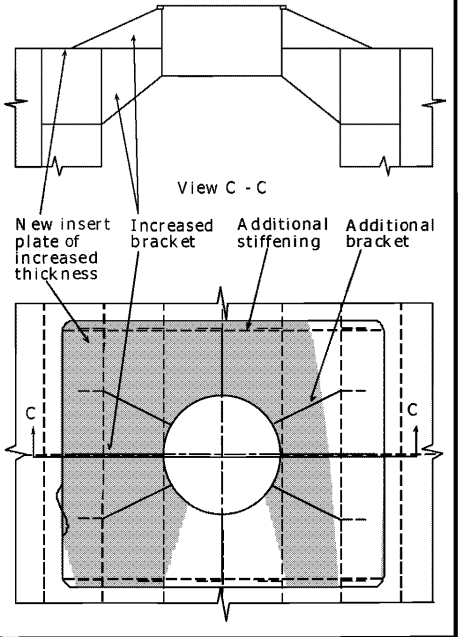

Notes on possible cause of damage

1. Insufficient deck strengthening (missing base plate).
2. Insufficient strengthening of steering gear foundation.
3. Bolts of steering gear were not sufficiently pre-loaded.

Notes on repairs

1. New insert base plate of increased plate thickness.
2. Additional longitudinal stiffening at base plate edges.
3. Additional foundation brackets above and under deck (star configuration).

Area 3 Stern frame, rudder arrangement and propeller shaft support

Contents

1 General

2 What to look for - Drydock inspection
2.1 Deformation
2.2 Fractures
2.3 Corrosion/Erosion/Abrasion

3 General comments on repair
3.1 Rudder
3.2 Repair of plate structures
3.3 Abrasion of bush and sleeve
3.4 Assembling of rudders
3.5 Repair of propeller boss and stern tube

Figures and/or Photographs - Area 3	
No.	**Title**
Figure 1	Nomenclature for stern frame, rudder arrangement and propeller shaft support
Figure 2	Potential problem areas
Photograph 1	Fractured rudder due to corrosion in rudder plating
Figure 3	Rudder stock repair by welding
Diagram 1	Preheating temperature

Examples of structural detail failures and repairs - Area 3	
Example No.	**Title**
1	Fracture in rudder plate
2	Fracture in connection of palm plate to rudder blade
3	Fracture in rudder plating of semi-spade rudder (short fracture with end located forward of the vertical web)
4	Fracture in rudder plating of semi-spade rudder extending beyond the vertical web

Examples of structural detail failures and repairs - Area 3	
Example No.	**Title**
5	Fracture in rudder plating of semi-spade rudder in way of pintle cut-out
6	Fracture in side shell plating at the connection to propeller boss
7	Fracture in stern tube at the connection to stern frame

1 General

1.1 The stern frame, possible strut bearing arrangement and connecting structures are exposed to propeller induced vibrations, which may lead to fatigue cracking in areas where stress concentrations occur.

1.2 The rudder and rudder horn are exposed to an accelerated and fluctuating stream from the propeller, which may also lead to fatigue cracking in areas where stress concentrations occur.

1.3 In extreme weather conditions the rudder may suffer wave slamming forces causing deformations of the rudder stock and the rudder horn as well as of the rudder itself.

1.4 The rudder and the rudder horn as well as struts (on shafting arrangement with strut bearings) may also come in contacts with floating object such as timber-logs or ice, causing damages similar to those described in **1.3**.

1.5 Since different materials are used in adjacent compartments and structures, accelerated (galvanic) corrosion may occur if protective coating and/or sacrificial anodes are not maintained properly.

1.6 Pre-existing manufacturing internal defects in cast pieces may lead to fatigue cracking.

1.7 A summary of potential problem areas is shown in **Figure 2**.

1.8 A complete survey of the rudder arrangement is only possible in dry dock. However, in some cases a survey including a damage survey can be carried out afloat by divers or with a trimmed ship. (Moved from **2.4**)

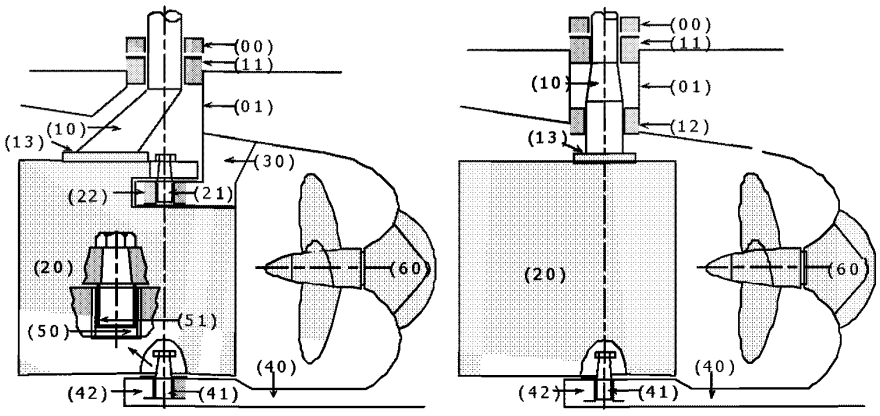

(a) Rudders supported by sole piece

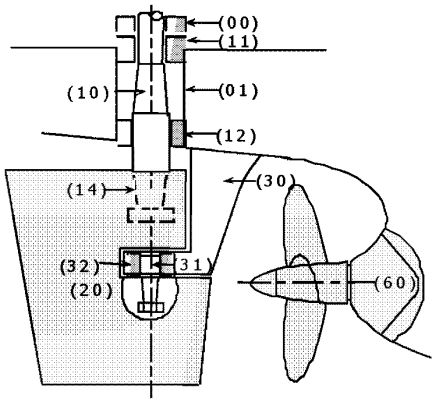

(b) Semi-spade rudder (or Mariner rudder)

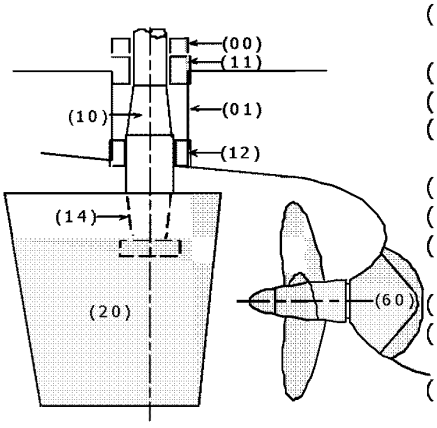

(c) Spade rudder

Nomenclature

(00) Rudder carrier
(01) Rudder trunk
(10) Rudder stock
(11) Carrier bearing
(12) Neck bearing
(13) Horizontal coupling (Flange coupling)
(14) Cone coupling
(20) Rudder blade
(21) Upper pintle
(22) Upper pintle bearing
(30) Rudder horn
(31) Horn pintle
(32) Horn pintle bearing
(40) Sole piece
(41) Bottom pintle
(42) Bottom pintle bearing
(50) Bush
(51) Sleeve (Liner)
(60) Propeller boss (Stern tube casting)
(70) Propeller shaft bracket (Tail shaft strut)

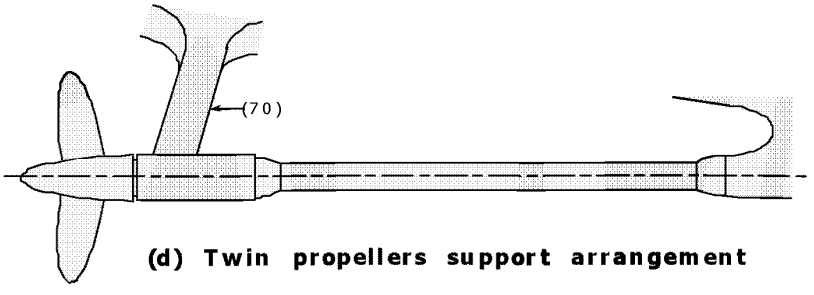

(d) Twin propellers support arrangement

Figure 1 Nomenclature for stern frame, rudder arrangement and propeller shaft support

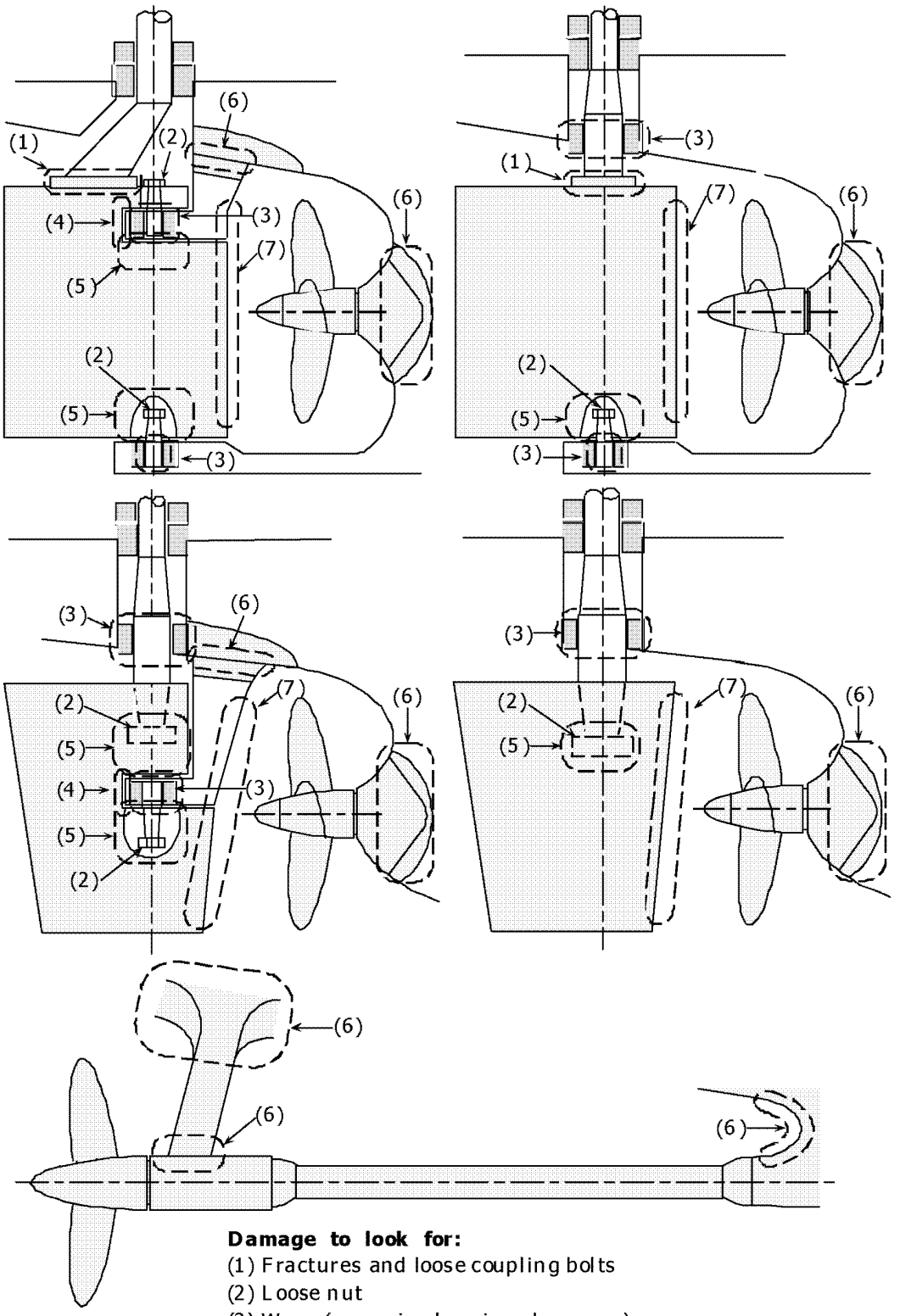

Damage to look for:

(1) Fractures and loose coupling bolts
(2) Loose nut
(3) Wear (excessive bearing clearance)
(4) Fractures in way of pintle cutout
(5) Fractures in way of removable access plate
(6) Fractures
(7) Erosion

Figure 2 Potential problem areas

2 What to look for - Drydock inspection

2.1 Deformations

2.1.1 The rudder blade, rudder stock, rudder horn and propeller boss/brackets have to be checked for deformations.

2.1.2 Indications of deformation of rudder stock/rudder horn could be found by excessive clearance.

2.1.3 Possible twisting deformation or slipping of cone connection can be observed by the difference in angle between rudder and tiller.

2.1.4 If bending or twisting deformation is found, the rudder has to be dismounted for further inspection.

2.2 Fractures

2.2.1 Fractures in rudder plating should be looked for at slot welds, welds of removable part to the rudder blade, and welds of the access plate in case of vertical cone coupling between rudder blade and rudder stock and/or pintle. Such welds may have latent defects due to the limited applicable welding procedure. Serious fractures in rudder plating may cause loss of rudder.

2.2.2 Fractures should be looked for at weld connection between rudder horn, propeller boss and propeller shaft brackets, and stern frame.

2.2.3 Fractures should be looked for at the upper and lower corners in way of the pintle recess in case of semi-spade rudders. Typical fractures are shown in **Examples 3** to **5**.

2.2.4 Fractures should be looked for at the transition radius between rudder stock and horizontal coupling (palm) plate, and the connection between horizontal coupling plate and rudder blade in case of horizontal coupling. Typical fractures are shown in **Examples 1 and 2**. Fatigue fractures should be looked for at the palm plate itself in case of loosened or lost coupling bolts.

2.2.5 Fractures should be looked for in the rudder plating in way of the internal stiffening structures since (resonant) vibrations of the plating may have occurred.

2.2.6 If the rudder stock is deformed, fractures should be looked for in rudder stock by nondestructive examinations before commencing repair measures, in particular in and around the keyway, if any.

2.3 Corrosion/Erosion/Abrasion

2.3.1 Rudder plating

Corrosion/erosion (such as deep pitting corrosion) should be looked for in rudder/rudder horn, especially in welds. In extreme cases the corrosion /erosion may cause a large fracture as shown in **Photograph 1**.



Photograph 1
Fractured rudder due to corrosion in rudder plating

2.3.2 Rudder stock and pintle

The following should be looked for on the rudder stock and pintle:

- Excessive clearance between sleeve and bush of the rudder stock/pintle beyond the allowable limit specified by the Classification Society.
- Condition of sleeve. If the sleeve is loose, ingress of water may have caused corrosion.
- Deep pitting corrosion in the rudder stock and pintle adjacent to the stainless steel sleeve.
- Slipping of rudder stock cone coupling. For a vertical cone coupling with hydraulic pressure connection, sliding of the rudder stock cone in the cast piece may cause severe surface damages.
- Where a stainless steel liner/sleeve/cladding for the pintle/rudder stock is fitted into a stainless steel bush, an additional check should be made for crevice corrosion.

3 General comments on repair

3.1 Rudder

3.1.1 Rudder stock with deformation

(a) If the rudder stock is twisted due to excessive forces such as contact or grounding and has no additional damages (fractures etc.) or other significant deformation, the stock usually can be used. The need for repair or heat treatment of the stock will depend on the amount of twist in the stock according to the requirements of the Classification Society. The keyway, if any, has to be milled in a new position.

(b) Rudder stocks with bending deformations, not having any fractures, may be repaired depending on the size of the deformation either by warm or by cold straightening in an approved workshop according to a procedure approved by the Classification Society. In the case of warm straightening, as a guideline, the temperature should usually not exceed the heat treatment temperature of 530-580 .

(c) In the case of fractures on a rudder stock with deformations, the stock may be used again depending on the nature and extent of the fractures. If a welding repair is considered acceptable, the fractures are to be

removed by machining/grinding and the welding is to be based on an approved welding procedure together with post weld heat treatment as required by the Classification Society.

3.1.2 Repair of rudder stocks/pintles by weld cladding

Rudder stocks and/or pintles may be repaired by welding replacing wasted material by similar weld material. After removal of the wasted area (corrosion, scratches, etc.) by machining and/or grinding the build-up welding has to be carried out by an automatic spiral welding according to an approved welding procedure. The welding has to be extended over the area of large bending moments (rudder stocks). In special cases post weld heat treatment has to be carried out according to the requirements of the Classification Society. After final machining, a sufficient number of layers of welding material have to remain on the rudder stock/pintle. A summary of the most important steps and conditions of this repair is shown in the **Figure 3**.

In the case of rudder stocks with bending loads, fatigue fractures in way of the transition radius between the rudder stock and the horizontal coupling plate cannot be repaired by local welding. A new rudder stock with a modified transition geometry has to be manufactured, as a rule (See **Example 1**). In exceptional cases a welding repair can be carried out based on an approved welding procedure. Measures have to be taken to avoid a coincidence of the metallurgical notch of the heat affected zone with the stress concentration in the radius' area. Additional surveys of the repair (including non-destructive fracture examination) have to be carried out at reduced intervals.

Replacing wasted material by similar ordinary weld material

- Removal of the wasted area by machining and/or grinding, non-destructive examination for fractures (magnetic particle inspection preferred)
- Build-up welding by automatic spiral welding (turning device) according to an approved welding procedure (weld process, preheating, welding consumables, etc.)
- Extension of build-up welding over the area of **large bending moments (shafts)** according to the sketch

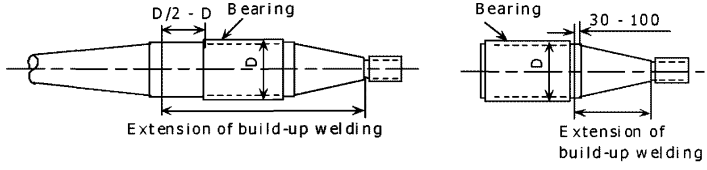

Rudder stock **Pintle**

- Sufficient number of weld layers to compensate removed material, at least one layer in excess (heat treatment of the remaining layer)
- Transition at the end of the build-up welding according to the following sketch

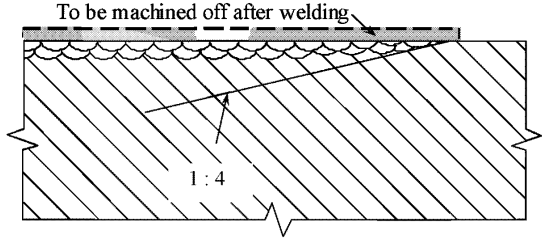

- Post weld heat treatment if required in special cases (never for stainless steel cladding on ordinary steel)
- Final machining, at least two layers of welding material have to remain on the rudder stock (See the above sketch)
- Non-destructive fracture examination

Figure 3 Rudder stock repair by welding

3.2 Repair of plate structures

3.2.1 Fatigue fractures in welding seams (butt welds) caused by welding failures (lack of fusion) can be gouged out and rewelded with proper root penetration.

3.2.2 In case of fractures, probably caused by (resonant) vibration, vibration analysis of the rudder plating has to be performed, and design modifications have to be carried out in order to change the natural frequency of the plate field.

3.2.3 Short fatigue fractures starting in the lower and/or upper corners of the pintle recess of semi-spade rudders that do not propagate into vertical or horizontal stiffening structures may be repaired by gouging out and welding. This procedure according to **Example 3** should be preferred.

In case of longer fatigue fractures starting in the lower and/or upper corners of the pintle recess of semi-spade rudders that propagate over a longer distance into the plating, thorough check of the internal structures has to be carried out. The fractured parts of the plating and internal structures, if necessary, have to be replaced by insert plates. A proper welding connection between the insert plate and the internal stiffening structure is very important (See **Examples 4** and **5**).

The area of the pintle recess corners has to be ground smooth after the repair. In many cases a modification of the radius, an increased thickness of plating and an enhanced steel quality may be necessary.

3.2.4 For the fractures at the connection between plating and cast pieces adequate pre-heating is necessary. The pre-heating temperature is to be determined taking into account the following parameters:

- chemical composition (carbon equivalent C_{eq})
- thickness of the structure
- hydrogen content in the welding consumables
- heat input

3.2.5 As a guide, the preheating temperature can be obtained from **Diagram 1** using the plate thickness and carbon equivalent of the thicker structure.

3.2.6 All welding repairs are to be carried out using qualified/approved welding procedures.

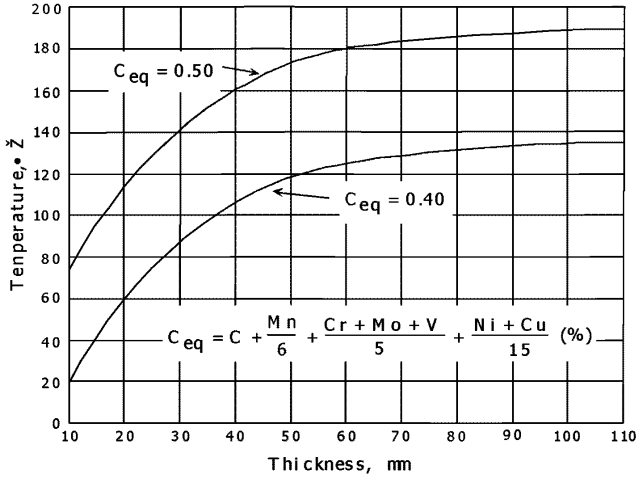

Diagram 1 Preheating temperature

3.3 Abrasion of bush and sleeve

Abrasion rate depends on the features of the ship such as frequency of maneuvering. However, if excessive clearance is found within a short period, e.g. 5 years, alignment of the rudder arrangement and the matching of the materials for sleeve and bush should be examined together with the replacement of the bush.

3.4 Assembling of rudders

After mounting of all parts of the rudder, nuts of rudder stocks with vertical cone coupling and nuts of pintles are to be effectively secured either against each other or both against the coupling plate.

3.5 Repair of propeller boss and stern tube

Repair examples for propeller boss and stern tube are shown in **Examples 6**and **7.** Regarding the welding reference is made to **3.1.2**, **3.2.4** and **3.2.5**.

GENERAL CARGO SHIPS	Guidelines for Surveys, Assessment and Repair of Hull Structure	
Part 2	**Fore and aft end regions**	**Example No.**
Area 3	**Stern frame, rudder arrangement and propeller shaft support**	**1**
Detail of damage	Fracture in rudder stock	

Sketch of damage

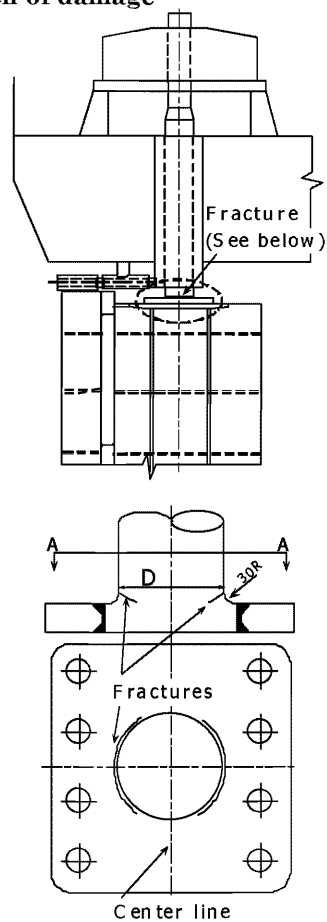

View A - A

Sketch of repair

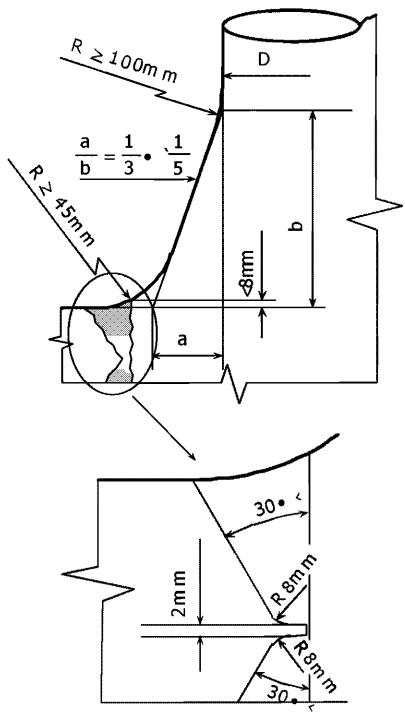

Notes on possible cause of damage

1. Inadequate design for stress concentration in rudder stock.

Notes on repairs

1. Modification of detail design of rudder stock to reduce the stress concentration.

GENERAL CARGO SHIPS	Guidelines for Surveys, Assessment and Repair of Hull Structure	
Part 2	**Fore and aft end regions**	**Example No.**
Area 3	**Stern frame, rudder arrangement and propeller shaft support**	**2**
Detail of damage	Fracture in connection of palm plate to rudder blade	

Sketch of damage

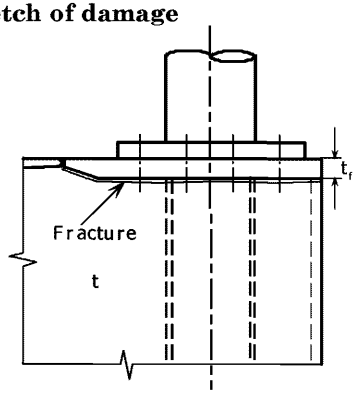

Sketch of repair

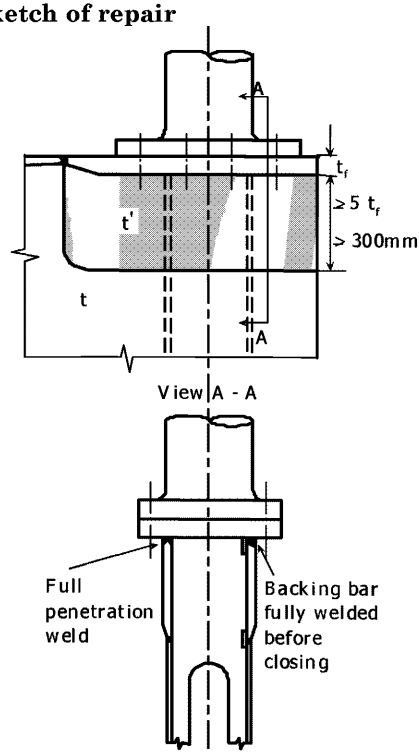

t = plate thickness, mm

t_f = actual flange thickness, mm

$t' = \frac{t_f}{3} + 5$, mm, where $t_f < 50mm$

$t' = 3\sqrt{t_f}$, mm, where $t_f \geq 50mm$

Notes on possible cause of damage

1. Inadequate connection between palm plate and rudder blade plating (insufficient plating thickness and/or insufficient fillet weld).

Notes on repairs

1. Modification of detail design of the connection by increasing the plate thickness and full penetration welding.

GENERAL CARGO SHIPS	Guidelines for Surveys, Assessment and Repair of Hull Structure	
Part 2	**Fore and aft end regions**	**Example No.**
Area 3	**Stern frame, rudder arrangement and propeller shaft support**	**3**
Detail of damage	Fracture in rudder plating of semi-spade rudder (short fracture with end located forward of the vertical web)	

Sketch of damage

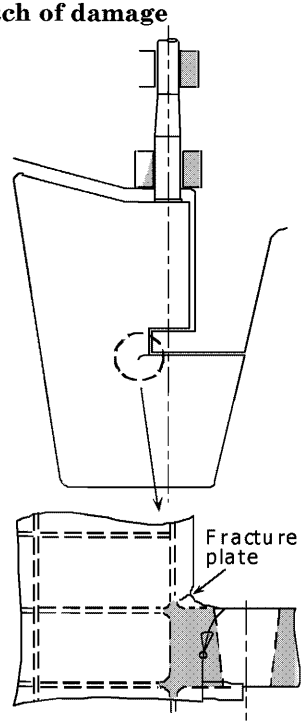

Sketch of repair

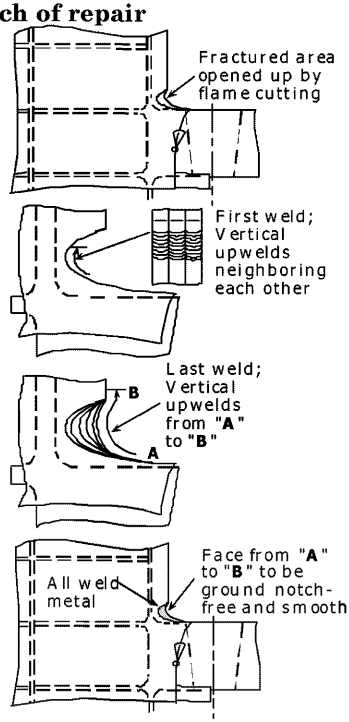

Notes on possible cause of damage

1. Stress concentration due to inadequate local design and/or fabrication notches in way of the butt weld between cast piece and plating.

Notes on repairs

1. Grooving-out and welding of the fracture is not always adequate (metallurgical notch in way of a high stressed area).
2. In the proposed repair procedure the metallurgical notches are shifted into a zone exposed to lower stresses.
3. After welding a modification of the radius according to the proposal in **Example 5** is to be carried out.
4. In case of very small crack it can be ground off by increasing the radius.

GENERAL CARGO SHIPS	Guidelines for Surveys, Assessment and Repair of Hull Structure	
Part 2	**Fore and aft end regions**	**Example No.**
Area 3	**Stern frame, rudder arrangement and propeller shaft support**	**4**
Detail of damage	Fracture in rudder plating of semi-spade rudder extending beyond the vertical web	

Sketch of damage

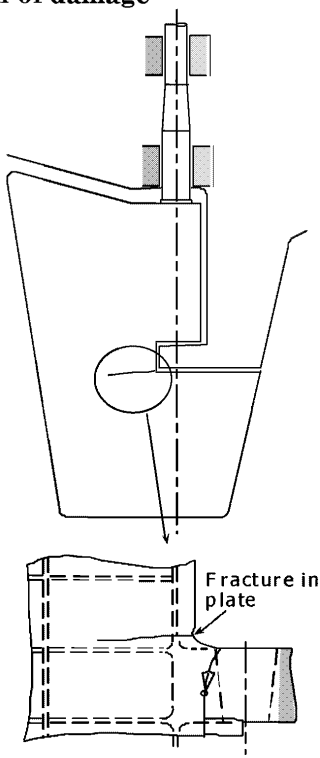

Sketch of repair

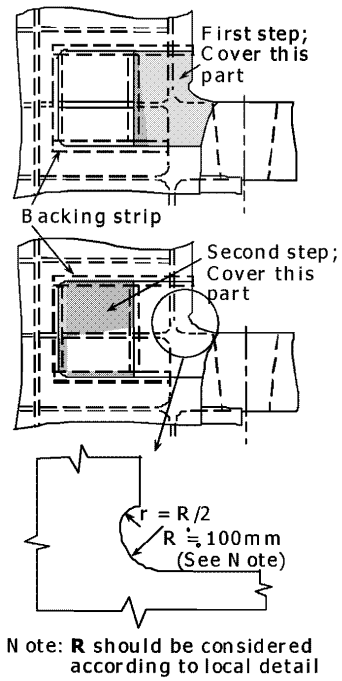

Notes on possible cause of damage

1. Stress concentration due to inadequate local design and/or fabrication notches in way of the butt weld between cast piece and plating.

Notes on repairs

1. Fractured plating is to be cut-out.
2. Internal structures are to be checked.
3. Cut-out is to be closed by an insert plating according to the sketch (welding only from one side is demonstrated).
4. Modification of the radius.
5. In case of a new cast piece, connection with the plating is to be shifted outside the high stress area.

GENERAL CARGO SHIPS	Guidelines for Surveys, Assessment and Repair of Hull Structure	
Part 2	**Fore and aft end regions**	**Example No.**
Area 3	**Stern frame, rudder arrangement and propeller shaft support**	**5**
Detail of damage	Fracture in rudder plating of semi-spade rudder in way of pintle cutout	

Sketch of damage

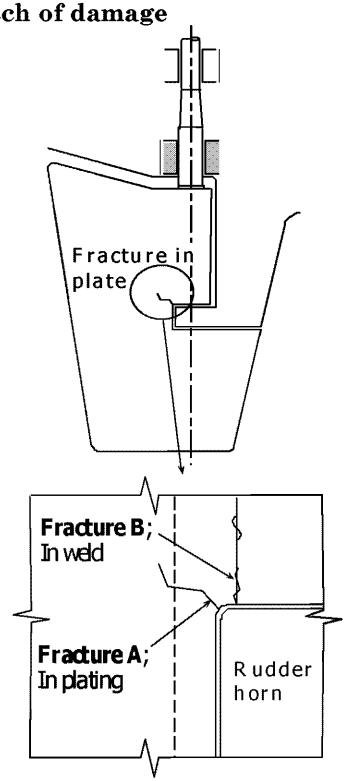

Sketch of repair

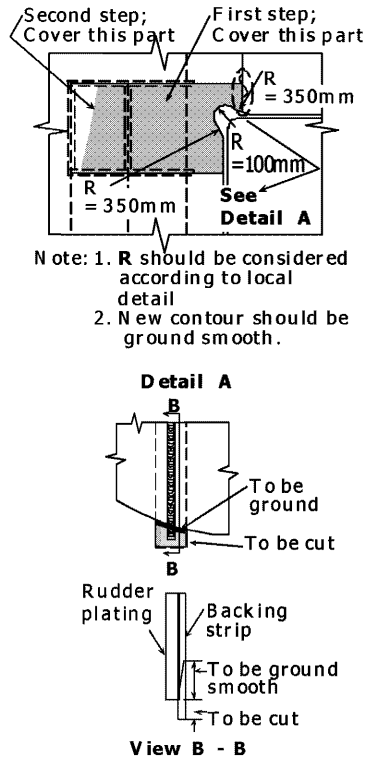

Notes on possible cause of damage

1. Inadequate design for stress concentration in way of pintle bearing
2. (**Fracture A**). Imperfection in welding seam (**Fracture B**).

Notes on repairs

1. Fractured part to be cropped off.
2. Repair by two insert plates of modified, stress releasing contour. For the vertical seam no backing strip is used 100mm off contour, welding from both sides, to be ground after welding.
3. Variant (See **Detail A**): Repair as mentioned under 2 with the use of backing strip for the compete vertical seam. After welding backing strip partly removed by grinding.

GENERAL CARGO SHIPS	Guidelines for Surveys, Assessment and Repair of Hull Structure	
Part 2	Fore and aft end regions	Example No.
Area 3	Stern frame, rudder arrangement and propeller shaft support	6
Detail of damage	Fracture in side shell plating at the connection to propeller boss	

Sketch of damage

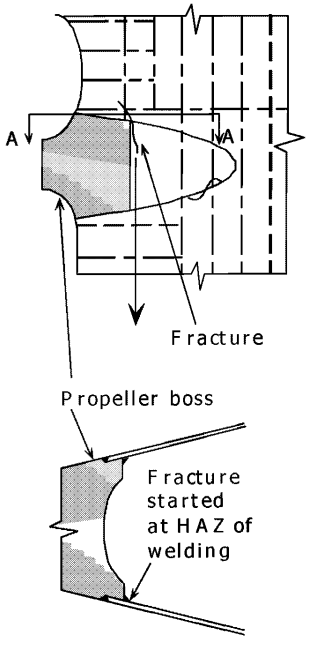

Sketch of repair

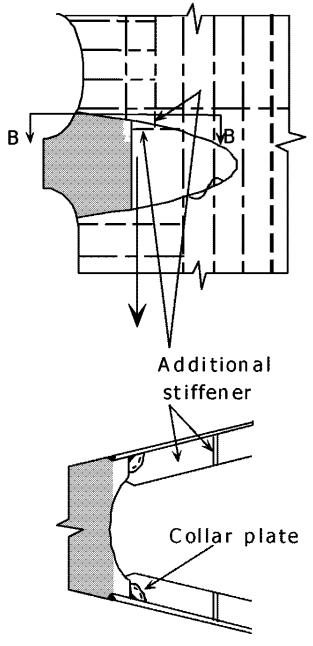

Notes on possible cause of damage

1. Fatigue fracture due to vibration.

Notes on repairs

1. Fractured side shell plating is to be cropped and part renewed.
2. Additional stiffeners are to be provided.
3. Collar plate is to be provided.

GENERAL CARGO SHIPS	Guidelines for Surveys, Assessment and Repair of Hull Structure	
Part 2	**Fore and aft end regions**	**Example No.**
Area 3	**Stern frame, rudder arrangement and propeller shaft support**	**7**
Detail of damage	Fracture in stern tube at the connection to stern frame	

Sketch of damage

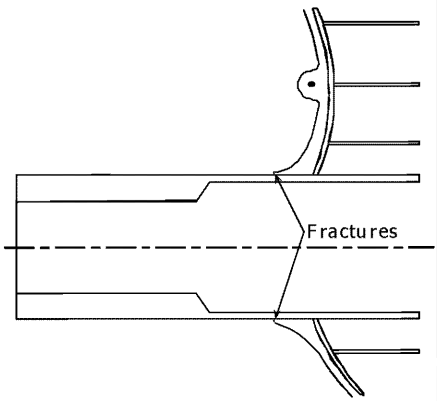

Sketch of repair

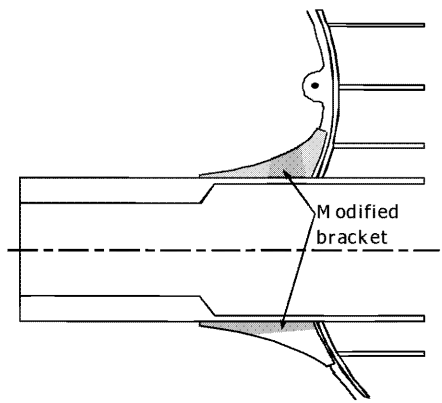

Notes on possible cause of damage

1. Fatigue fracture due to vibration.

Notes on repairs

1. Fractured tube is to be welded from both sides.
2. Brackets are to be replaced by modified brackets with soft transition.

Part 3 Machinery and accommodation spaces

Area 1 Engine room structure
Area 2 Accommodation structure

Area 1 Engine room structure

Contents

1 General

2 What to look for
2.1 Material wastage
2.2 Fractures

3 General comments on repair
3.1 Fractures

Examples of structural detail failures and repairs - Area 1	
Example No.	Title
1	Fractures in brackets at main engine foundation
2	Corrosion in bottom plating under sounding pipe in way of bilge storage tank
3	Corrosion in bottom plating under inlet/suction pipe in way of bilge storage tank

1 General

1.1 The engine room structure is categorized as follows.

- Boundary structure which consists of upper deck, bulkhead, inner bottom plating, funnel, etc.
- Deep tank structure
- Double bottom tank structure

The boundary structure can generally be inspected routinely. Therefore, if damage is found, it can be easily rectified. Other structures, however, cannot be inspected routinely and therefore damage is found only when the ship is dry-docked or a problem has occurred.

2 What to look for

2.1 Material wastage

2.1.1 Boundary structure

Tank top plating, shell plating and bulkhead plating adjacent to the tank top plating may have severe corrosion due to sea water which is derived from leakage or lack of maintenance of sea water lines.

In drydock the bilge well should be cleaned and inspected carefully, because the bilge well may have heavy pitting corrosion due to sea water which is derived from leakage at the gland packing or maintenance operation of machinery.

The funnel consists of part of the boundary structure and it often has serious corrosion which may impair fire fighting of engine room in addition to weathertightness.

2.1.2 Double bottom tank

The bilge tank is under relatively severe corrosion environment compared to other double bottom tanks, since oily bilge containing sea water is put into the tank. Severe corrosion may result in a hole in the bottom plating, especially under the sounding pipe. In cofferdam pitting corrosion caused by sea water entering from the air pipe is seldom found.

2.2 Fractures

2.2.1 Deep tank

In general deep tanks for fresh water or fuel oil are provided in the engine room. These tank structures often have fractures due to vibration. Since the double bottom structure in the engine room is extremly rigid, fractures in this structure are very rare.

3 General comments on repair

3.1 Fractures

3.1.1 Deep tank

For fractures caused by vibration, consideration should be paid to change the natural frequency of the structure in addition to repairing damage to the structure. This may be achieved by adding proper additional structural

members. However, this is often very difficult and many tentative tests may be needed before reaching the desired solution.

GENERAL CARGO SHIPS	Guidelines for Surveys, Assessment and Repair of Hull Structure	
Part 3	**Machinery and accommodation spaces**	**Example No.**
Area 1	**Engine room structure**	**1**
Detail of damage	Fractures in brackets at main engine foundation	

Sketch of damage

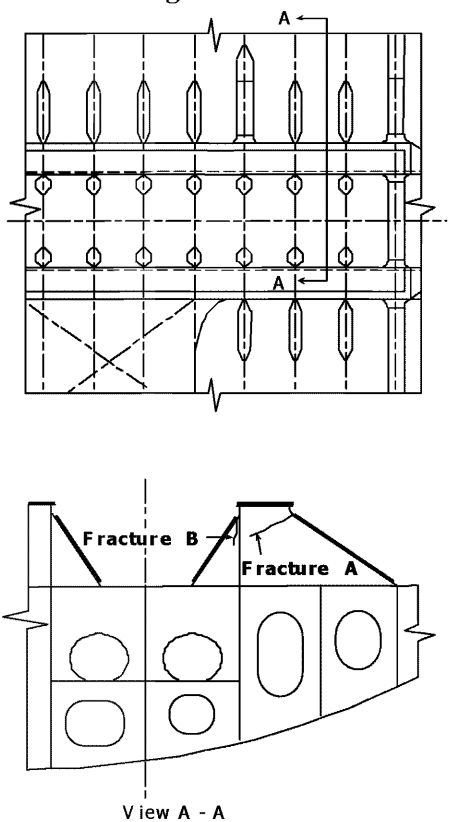

Sketch of repair

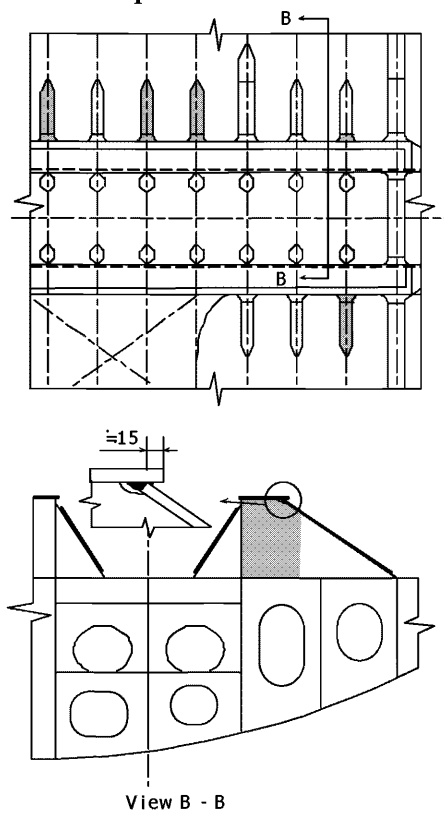

Notes on possible cause of damage

1. Vibration of main engine.
2. Insufficient strength of brackets at main engine foundation.
3. Insufficient pre-load of the bolts.

Notes on repairs

1. Fractures may be veed-out and
2. rewelded.
   New modified brackets at main engine foundation.
   Or insert pieces and additional flanges to increase section modulus of the brackets.

GENERAL CARGO SHIPS	Guidelines for Surveys, Assessment and Repair of Hull Structure	
Part 3	**Machinery and accommodation spaces**	**Example No.**
Area 1	**Engine room structure**	**2**
Detail of damage	Corrosion in bottom plating under sounding pipe in way of bilge storage tank in engine room	

Sketch of damage

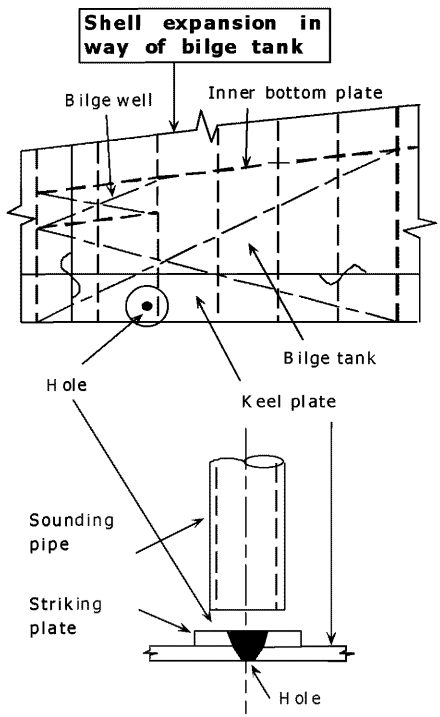

Sketch of repair

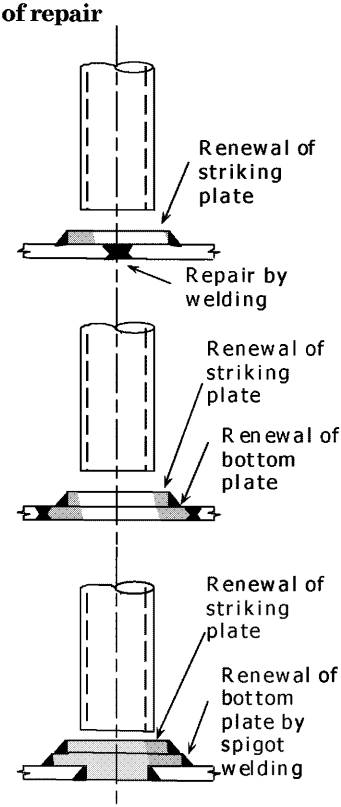

Notes on possible cause of damage

1. Heavy corrosion of bottom plating under sounding pipe.

Notes on repairs

1. Corroded striking plating should be renewed.
2. Bottom plate should be repaired depending on the condition of corrosion.
   (Note)
   Repair by spigot welding can be applied to the structure only when the stress level is considerably low. Generally this procedure cannot be applied to the repair of bottom plating of ballast tanks in cargo hold region.

GENERAL CARGO SHIPS	Guidelines for Surveys, Assessment and Repair of Hull Structure	
Part 3	**Machinery and accommodation spaces**	**Example No.**
Area 1	**Engine room structure**	**3**
Detail of damage	Corrosion in bottom plating under inlet/suction/pipe in way of bilge tank in engine room	

Sketch of damage

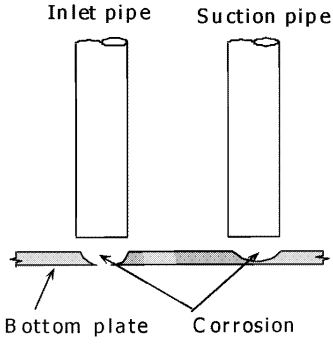

Sketch of repair

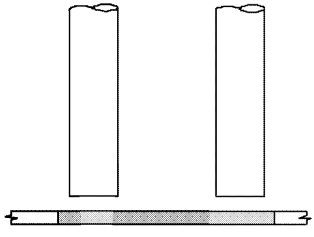

Notes on possible cause of damage

1. Heavy corrosion of bottom plating under the inlet/suction pipe.

Notes on repairs

1. Corrode bottom plate is to be cropped and part renewed. Thicker plate is
2 preferable.
Replacement of pipe end by enlarged conical opening (similar to suction head in ballast tank) is preferable.

Area 2 Accommodation structure

Contents

1 General/General comments to repair

Figures and/or Photographs - Area 1	
No.	Title
Photograph 1	Corroded accommodation house structure

1 General/General comments to repair

1.1 General

Generally accommodation structures have few damages compared to other structures due to low stress levels.

The main damage is corrosion which may cause serious problems since the structure is relatively thin. Serious corrosion may be found in exposed deck plating and its adjoining accommodation house structure where water is liable to collect (See **Photograph 1**). Corrosion is also found in accommodation bulkheads where fittings such as doors, side scuttles, ventilators, etc. are fitted and proper maintenance of the area is relatively difficult. Deterioration of the bulkheads including fittings may impair the integrity of weathertightness.

Fractures caused by vibration may be found, in the structure itself and in various stays for such structures, mast, antenna etc. For such fractures consideration should be paid to change the natural frequency of the structure in addition to the repair.



Photograph 1 Corroded accommodation house structure



International Association of
Classification Societies 1999

gost.e-ecolog.ru