No.55 GENERAL CARGO SHIPS - Guidelines For Surveys, Assessment and Repair of Hull Sturcture

(March 1999)

gost.e-ecolog.ru

IACS

INTERNATIONAL ASSOCIATION
OF CLASSIFICATION SOCIETIES



GENERAL CARGO SHIPS

Guidelines for Surveys, Assessment and Repair of Hull Structure

IACS -International Association of Classification Societies, 1999

All rights reserved.
Except as permitted under current legislation no part of this work may be photocopied, stored in a retrieval system, published, performed in public, adapted, broadcast, transmitted, recorded or reproduced in any form or by any means, without prior permission of the copyright owner.
Where IACS has granted written permission for any part of this publication to be quoted such quotation must include acknowledgment to IACS.
Enquiries should be addressed to The Permanent Secretary,
International Association of Classification Societies,
5 Old Queen Street,
London, SW1H9JA
Telephone: +44-(0)171-976 0660
Fax: +44-(0)171-976 0440
INTERNET:gost.e-ecolog.ru

TERMS AND CONDITIONS

"The International Association of Classification Societies (IACS), its Member Societies and their officers, members, employees and agents (on behalf of whom this notice is issued) shall be under no liability or responsibility in negligence or otherwise to any person in respect of any information or advice expressly or impliedly given in this document, or in respect of any inaccuracy herein or omission herefrom or in respect of any act or omission which has caused or contributed to this document being issued with the information or advice it contains (if any).

Without derogating from the generality of the foregoing, neither IACS nor its Member Societies and their officers, members, employees or agents shall be liable in negligence or otherwise howsoever for any indirect or consequential loss to any person caused by or arising from any information, advice, inaccuracy or omission being given or contained herein or any act or omission causing or contributing to any such information, advice, inaccuracy or omission being given or contained herein."

Published in 1999 for the International Association of Classification Societies.

Contents

1 Introduction

2 Class survey requirements
2.1 Periodical classification surveys
2.1.1 General
2.1.2 Special Survey
2.1.3 Annual Survey
2.1.4 Intermediate Survey
2.1.5 Drydock Survey
2.2 Damage and repair surveys

3 Technical background for surveys
3.1 General
3.2 Definitions
3.3 Structural damages and deterioration
3.3.1 General
3.3.2 Material wastage
3.3.3 Fractures
3.3.4 Deformations
3.4 Structural detail failures and repairs
3.5 IACS Early Warning Scheme (EWS) for reporting of significant damage

4 Survey planning, preparation and execution
4.1 General
4.2 Conditions for survey
4.3 Access arrangement and safety
4.4 Equipment and tools
4.4.1 Personnel protective equipment
4.4.2 Personnel survey equipment
4.4.3 Thickness measurement and fracture detection
4.5 Survey at sea or at anchorage
4.6 Documentation on board

5 Structural detail failures and repairs
5.1 General
5.2 Catalogue of structural detail failures and repairs
Part 1 Cargo hold region
Area 1 Upper deck structure

Area 2 Side structure
Area 3 Transverse bulkhead structure
Area 4 Tween deck structure
Area 5 Double bottom structure

Part 2 Fore and aft end regions

Area 1 Fore end structure
Area 2 Aft end structure
Area 3 Stern frame, rudder arrangement and propeller shaft support

Part 3 Machinery and accommodation spaces

Area 1 Engine room structure
Area 2 Accommodation structure

1 Introduction

The International Association of Classification Societies (IACS) is introducing a series of manuals with the intention of giving guidelines to assist the Surveyors of IACS Member Societies, and other interested parties involved in the survey, assessment and repair of hull structures for certain ship types.

This manual gives guidelines for a general cargo ship which is designed with one or more decks specifically for the carriage of diverse forms of dry cargo.

Figure 1 shows a typical general arrangement of a general cargo ship with single tween deck.

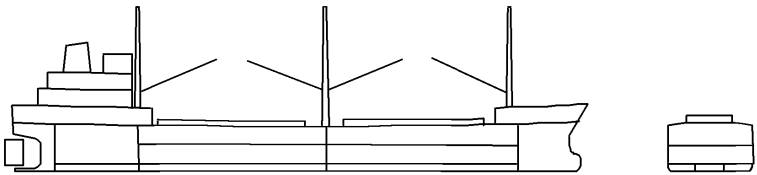

Figure 1 General view of a typical general cargo ship

The guidelines focus on the IACS Member Societies' survey procedures but may also be useful in connection with inspection/examination schemes of other regulatory bodies, owners and operators.

The manual includes a review of survey preparation guidelines which cover the safety aspects related to the performance of the survey, the necessary access facilities, and the preparation necessary before the surveys can be carried out.

The survey guidelines encompass the different main structural areas of the hull where damages have been recorded, focusing on the main features of the structural items of each area.

An important feature of the manual is the inclusion of the section which illustrates examples of structural deterioration and damages related to each structural area and gives what to look for, possible cause, and recommended repair methods, when considered appropriate.

The "IACS Early Warning Scheme (EWS)", with the emphasis on the proper reporting of significant hull damages by the respective classification societies, will enable the analysis of problems as they arise, including revisions of these Guidelines.

This manual has been developed using the best information currently available. It is intended only as guidance in support of the sound judgment of surveyors, and is to be used at the surveyors' discretion. It is recognized that alternative and satisfactory methods are already applied by surveyors. Should there be any doubt with regard to interpretation or validity in connection with particular applications, clarification should be obtained from the Classification Society concerned.

Figures 2 (a) and **(b)** show cargo hold structural configurations for general cargo ships. As many different cargoes are carried by general cargo ships, hull structures

differ in accordance with their purpose. These guidelines intend to cover those ships.

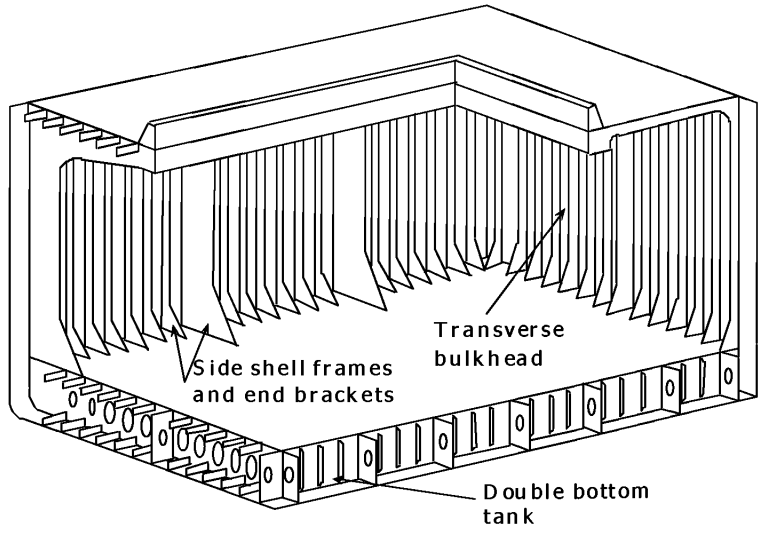

(a) Single deck ship

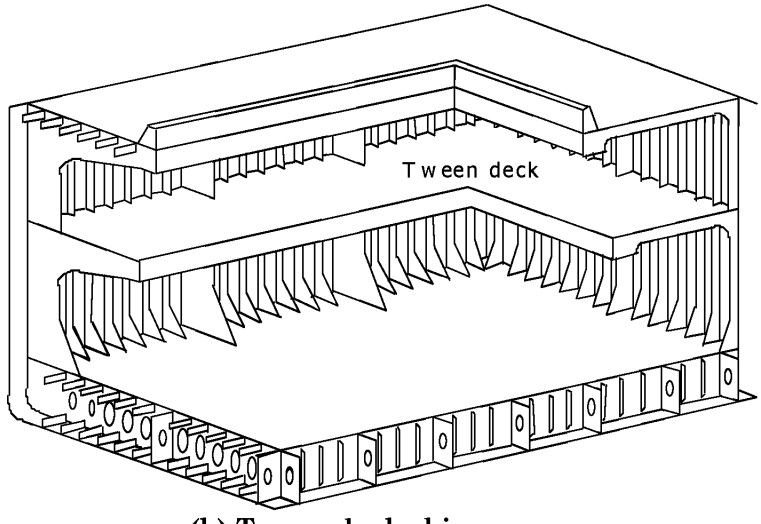

(b) Tween deck ship

Figure 2 Cargo hold structural configurations for general cargo ships

2 Class survey requirements

2.1 Periodical classification surveys

2.1.1 General

For Class the programme of ***periodical hull surveys*** is of prime importance as far as structural assessment of the cargo holds, and the adjacent tanks is concerned. The programme of ***periodical hull surveys*** consists of ***Annual***, ***Intermediate***, and ***Special Surveys***. The Purpose of the ***Annual*** and ***Intermediate Surveys*** is to confirm that the general condition of the vessel is maintained at a satisfactory level. The ***Special Surveys*** of the hull structure are carried out at five year intervals with the purpose of establishing the condition of the structure to confirm that the structural integrity is satisfactory in accordance with the Classification Requirements, and will remain fit for its intended purpose until the next ***Special Survey***, subject to proper maintenance and operation. The ***Special Surveys*** are also aimed at detecting possible damage and to establish the extent of any deterioration.

The ***Annual***, ***Intermediate***, and ***Special Surveys*** are briefly introduced in the following **2.1.2- 2.1.4**. The surveys are carried out in accordance with the requirements specified in the Rules and Regulations of each IACS Member Society.

2.1.2 Special Survey

The ***Special Survey*** concentrates on examination in association with thickness determination. The report of the thickness measurement is recommended to be retained on board. ***Protective coating condition*** will be recorded for particular attention during the survey cycle. From 1991 it is a requirement for new ships to apply a ***protective coating*** to the structure in ***water ballast tanks*** which form part of the hull boundary.

2.1.3 Annual Survey

At ***Annual Surveys*** overall survey is required. For saltwater ballast tanks, examinations may be required as a consequence of the Intermediate or Special Surveys.

2.1.4 Intermediate Survey

At ***Intermediate Surveys***, in addition to the surveys required for Annual Surveys, examination of cargo holds and ballast tanks is required depending on the ship's age.

2.1.5 Drydock Survey

Drydock Surveys are requested twice during the Special Survey interval. In some cases it may be possible to replace one ***Drydock Survey*** with an ***In-Water Survey***. This will depend on the survey requirements of the relevant Classification Society.

2.2 Damage and repair surveys

Damage surveys are occasional surveys which are, in general, outside the programme of Periodical hull surveys and are requested as a result of hull

damage or other defects. It is the responsibility of the owner or his representative to inform the Classification Society concerned when such damage or defect could impair the structural capability or watertight integrity of the hull. The damages should be inspected and assessed by the Society's surveyors and the relevant repairs, if needed, are to be performed. In certain cases, depending on the extent, type and location of the damage, permanent repairs may be deferred to coincide with the planned periodical survey.

In cases of repairs intended to be carried out by riding crew during voyage, complete procedure including all necessary surveys is to be submitted to and agreed upon by the Classification Society reasonably in advance.

3 Technical background for surveys

3.1 General

3.1.1 The purpose of carrying out the periodical hull surveys is to detect possible structural defects and damages and to establish the extent of any deterioration. To help achieve this and to identify key locations on the hull structure that might warrant special attention, knowledge of any historical problems of the particular ship or other ships of a similar class is to be considered if available. In addition to the periodical surveys, occasional surveys of damages and repairs are carried out. Records of typical occurrences and chosen solutions should be available in the ship's history file.

3.2 Definitions

3.2.1 For clarity of definition and reporting of survey data, it is recommended that standard nomenclature for structural elements be adopted. Typical sections in way of cargo holds are illustrated in **Figures 3 (a)** and **(b)**. These figures show the generally accepted nomenclature.

The terms used in these guidelines are defined as follows:

(a) **Ballast Tank** is a tank which is being used primarily for salt water ballast.

(b) **Spaces** are separate compartments including holds and tanks.

(c) **Overall Inspection** is an inspection intended to report on the overall condition of the hull structure and determine the extent of additional close-up inspections.

(d) **Close-up Inspection** is an inspection where the details of structural components are within the close visual inspection range of the surveyors, i.e. normally within reach of hand.

(e) **Transverse Section** includes all longitudinal members such as plating, longitudinals and girders at the deck, side, bottom and inner bottom.

(f) **Representative Spaces** are those which are expected to reflect the condition of other spaces of similar type and service and with similar corrosion protection systems. When selecting representative spaces, account should be taken of the service and repair history on board.

(g) **Transition Region** is a region where discontinuity in longitudinal structure occurs, e.g. at forward bulkhead of engine room, collision bulkhead and bulkheads of deep cargo tanks in cargo hold region.

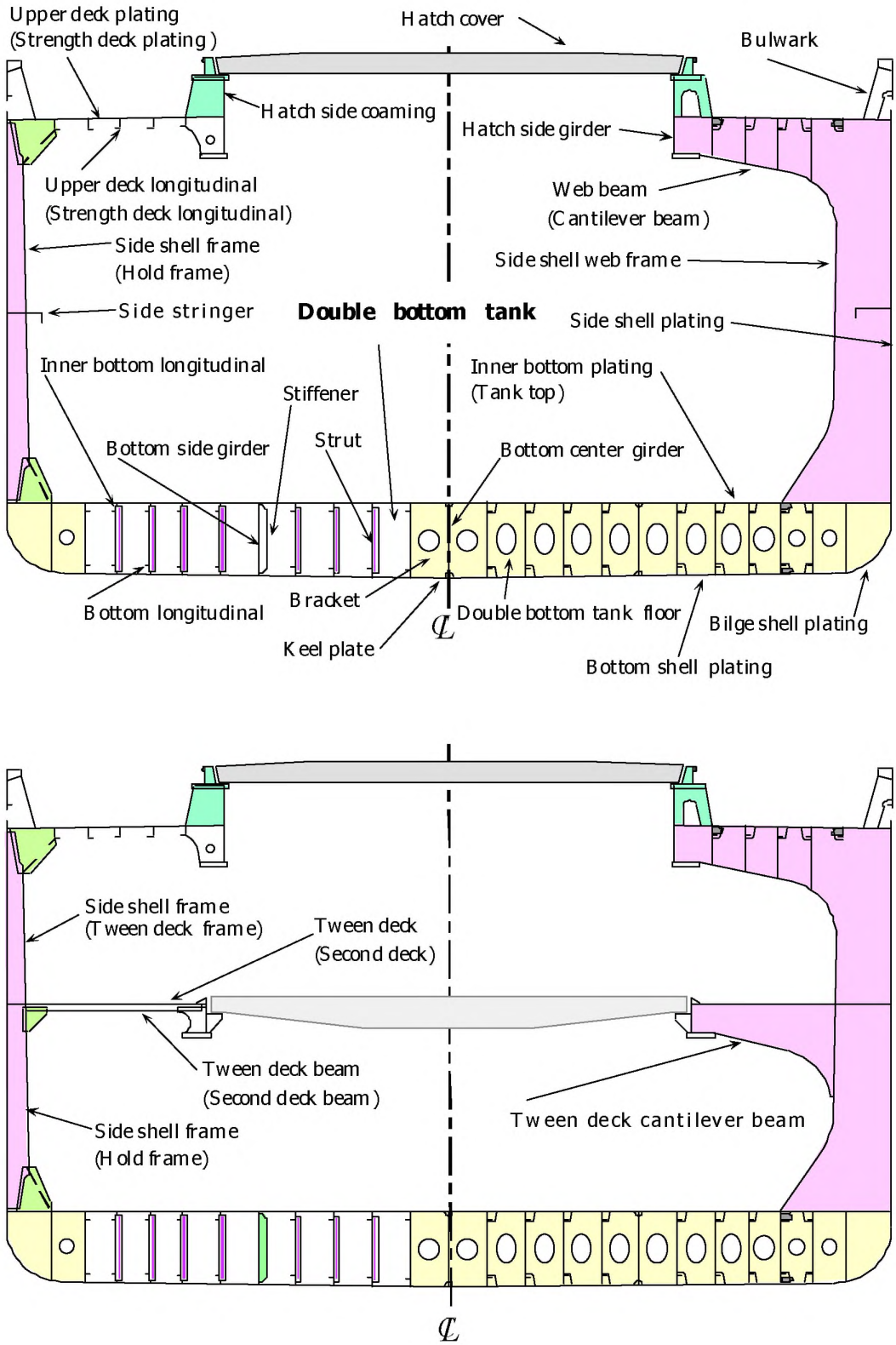

Figure 3 (a) Nomenclature for typical transverse section in way of cargo hold

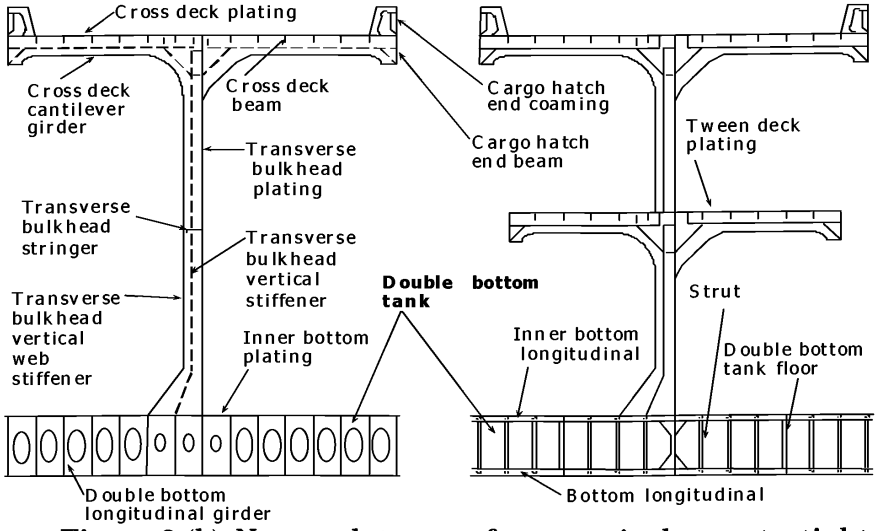

Figure 3 (b) Nomenclature for typical watertight bulkhead

3.3 Structural damages and deterioration

3.3.1 General

In the context of this manual, structural damages and deterioration imply deficiencies caused by:

- excessive corrosion
- design faults
- material defects or bad workmanship
- navigation in extreme weather conditions
- loading and unloading procedure
- wear and tear
- contact (with quay side, ice, touching underwater objects, etc.)

but not as a direct consequence of accidents such as collisions, groundings and fire/explosions.

Deficiencies are normally recognized as:

- material wastage
- fractures
- deformations

The various types of deficiencies and where they may occur are discussed in more detail as follows:

3.3.2 Material wastage

In addition to being familiar with typical structural defects likely to be encountered during a survey, it is necessary to be aware of the various forms and possible location of corrosion that may occur to the decks, holds, tanks and other structural elements.

General corrosion appears as a non-protective, friable rust which can occur uniformly on hold or tank internal surfaces that are uncoated. The rust scale continually breaks off, exposing fresh metal to corrosive attack. Thickness loss cannot usually be judged visually until excessive loss has occurred. Failure to remove mill scale during construction of the ship can accelerate corrosion experienced in service. Severe general corrosion in all types of ships, usually characterized by heavy scale accumulation, can lead to extensive steel renewals.

Grooving corrosion is often found in or beside welds, especially in the heat affected zone. The corrosion is caused by the galvanic current generated from the difference of the metallographic structure between the heat affected zone and base metal. Coating of the welds is generally less effective compared to other areas due to rough surfaces which exacerbate the corrosion. The grooving corrosion may lead to stress concentrations and further accelerate the corrosion. Grooving corrosion may be found in the base material where coating has been scratched or the metal itself has been mechanically damaged.

Pitting corrosion is often found in the bottom plating of ballast tanks. If there is a place which is liable to have corrosion due to local breakdown of coating, pitting corrosion starts. Once pitting corrosion starts, it is exacerbated by galvanic current between the pit and other metal.

Erosion which is caused by the effect of liquid and ***abrasion*** caused by mechanical effect may also be responsible for material wastage.

3.3.3 Fractures

In most cases fractures are found at locations where stress concentrations occur. Weld defects, flaws, and where lifting fittings used during the construction of the ship are not properly removed are often recognized as areas of stress concentration when fractures are found. If fractures have occurred under repeated stresses which are below the yielding stress, the fractures are called fatigue fractures. In addition to the cyclic stresses caused by wave forces, fatigue fractures are also caused by vibration forces derived from main engine or propeller especially in the afterward part of the hull. If the initiation points of the fractures are not apparent, the structure on the other side of the plating should be examined.

Fractures may not be readily visible due to lack of cleanliness, difficulty of access, poor lighting or compression of the fracture surfaces at the time of inspection. It is therefore important to identify, clean, and closely inspect potential problem areas.

Fracture initiating at latent defects in welding more commonly appear at the beginning or end of a run of welding, or rounding corners at the end of a stiffener, or at an intersection. Special attention should be paid to welding at toes of brackets, cut-outs, and intersections of welds. Fractures may also be initiated by undercutting the weld in way of stress concentrations. Although now less common, intermittent welding may cause problems because of the introduction of stress concentrations at the ends of each length of weld.

It should be noted that fractures, particularly ***fatigue fractures*** due to repeated stresses, may lead to serious damage, e.g. a fatigue fracture in a frame may propagate into shell plating and affect the watertight integrity of the hull. In extreme weather conditions the shell fracture could extend further resulting in the loss of part of the shell plating and consequent flooding of cargo hold.

3.3.4 Deformations

Deformation of structure is caused by in-plane load, out-of -plane load or combined loads. Such deformation is often identified as local deformation, such as deformation of panel including stiffener, or global deformation; such as deformation of structure including plating, beam, frame, girder, floor, etc.

If in the process of the deformation large deformation is caused due to small increase of the load, the process is called buckling.

Deformations are often caused by impact loads/contact and inadvertent overloading. Damages due to ***bottom slamming and wave impact forces*** are, in general, found in the forward part of the hull, although stern seas (pooping) have resulted in damages in way of the after part of the hull.

In the case of ***damages due to contact*** with other objects, special attention should be drawn to the fact that although damages to the shell plating may look small from the outboard side, in many cases the internal members are heavily damaged.

Permanent buckling may arise as a result of overloading, overall reduction in thickness due to corrosion, or contact damage. Elastic ***buckling*** will not be directly obvious but may be detected by coating damage, stress lines or shedding of scale. Buckling damages are often found in webs of web frames or floors. In many cases this is due to corrosion of webs/floors, too wide a spacing of stiffeners or wrongly positioned lightening holes, man-holes or slots in webs/floors.

Finally, it should be noted that inadvertent overloading may cause significant damages. In general, however, major causes of damages are associated with excessive corrosion and contact damage.

3.4 Structural detail failures and repairs

3.4.1 For examples of structural defects which have occurred in service, attention is drawn to ***Section 5 of these guidelines***. It is suggested that Surveyors and inspectors should be familiar with the contents of ***Section 5*** before undertaking a survey.

3.4.2 If replacement of defective parts must be postponed, the following temporary measures may be acceptable at the surveyor's discretion.

(a) The affected area may be sandblasted and painted in order to reduce corrosion rate.

(b) Doubler may be applied over the affected area. In case of bucking under compression, however, special consideration should be paid.

(c) Stronger members may support weakened stiffeners by applying temporarily connecting elements.
(d) Cement box may be applied over the affected area.

A suitable condition of class should be imposed when temporary measures are accepted.

3.5 IACS Early Warning Scheme (EWS) for reporting of significant hull damage

3.5.1 IACS has organised and set up a system to permit the collection, and dissemination amongst Member Societies of information (while excluding a ship's identity) on major hull damages.

3.5.2 The principal purpose of the IACS Early Warning Scheme is to enable a Classification Society with experience of a specific damage to make this information available to the other societies so that action can be implemented to avoid repetition of damage to hulls where similar structural arrangements are employed.

3.5.3 These guidelines have incorporated the experience gained from IACS EWS reporting.

4 Survey planning, preparation and execution

4.1 General

4.1.1 The owner should be aware of the scope of the forth coming survey and instruct those responsible, such as the master or the superintendent, to prepare necessary arrangements. If there is any doubt, the Classification Society concerned is to be consulted.

4.1.2 Survey execution will naturally be heavily influenced by the type of survey to be carried out. The scope of survey will have to be determined prior to the execution.

4.1.3 When deemed prudent and/or required by virtue of the periodic classification survey conducted, the surveyor should study the ship's structural arrangements and review the ship's operating and survey history and those of sister ships, where possible, to determine any known potential problem areas particular to the class of the ship. Sketches of typical structural elements should be prepared in advance so that any defects and/or ultrasonic thickness measurements can be recorded rapidly and accurately.

4.2 Conditions for survey

4.2.1 The owner is to provide the necessary facilities for a safe execution of the survey.

4.2.2 Tanks and spaces are to be safe for access, i.e. gas freed (marine chemist certificate), ventilated, etc.

4.2.3 Tanks and spaces are to be sufficiently clean and free from water, scale, dirt, oil residues, etc. and sufficient illumination is to be provided, to reveal corrosion, deformation, fractures, damages or other structural deterioration. In particular this applies to areas which are subject to thickness measurement.

4.3 Access arrangement and safety

4.3.1 In accordance with the intended survey, measures are to be provided to enable the hull structure to be examined in a safe and practical way.

4.3.2 In accordance with the intended survey in cargo holds and salt water ballast tanks a secure and acceptable means of access is to be provided. This can consist of permanent staging, temporary staging or ladders, lifts and movable platforms, or other equivalent means.

4.3.3 In addition, particular attention should be given to the following guidance:

(a) Prior to entering tanks and other enclosed spaces, e.g. chain lockers, void spaces, it is necessary to ensure that the oxygen content is to be tested and confirmed as safe. A responsible member of the crew should remain at the entrance to the space and if possible communication links should be established with both the bridge and engine room. Adequate lighting should be provided in addition to a hand held torch (flashlight).

(b) In tanks where the structure has been coated and recently deballasted, a thin slippery film may often remain on the surfaces. Care should be taken when inspecting such spaces.

(c) The removal of scale can be extremely difficult. The removal of scale by hammering may cause sheet scale to fall. When using a chipping or scaling hammer care should be taken to protect eyes, and where possible safety glasses should be worn.

If the structure is heavily scaled then it may be necessary to request de-scaling before conducting a satisfactory visual examination.

(d) Owners or their representatives have been known to request that a survey be carried out from the top of the cargo during discharging operations. For safety reason, surveys must not to be carried out during discharging operations in the hold.

(e) When entering a cargo hold or tank the bulkhead vertical ladders should be examined prior to descending to ensure that they are in good condition and rungs are not missing or loose. If holds are being entered when the hatch covers are in the closed position, then adequate lighting should be arranged in the holds. One person at a time should descend or ascend the ladder.

(f) If a portable ladder is used for survey purposes, the ladder should be in good condition and fitted with adjustable feet, to prevent it from slipping. Two crew members should be in attendance in order that the base of the ladder is adequately supported during use. The remains of cargo, in particular fine dust, on the tank top should be brushed away as this can increase the possibility of the ladder feet slipping.

(g) If an extending/articulated ladder (frame walk) is used to enable the examination of upper portions of cargo structure, the ladder should incorporate a hydraulic locking system and a built in safety harness. Regular maintenance and inspection of the ladder should be confirmed prior to its use.

(h) If a hydraulic arm vehicle ("Cherry Picker") is used to enable the examination of the upper parts of the cargo hold structure, the vehicle should be operated by qualified personnel and there should be evidence that the vehicle has been properly maintained. The standing platform should be fitted with a safety harness. For those vehicles equipped with a self leveling platform, care should be taken that the locking device is engaged after completion of maneuvering to ensure that the platform is fixed.

(i) Staging is the most common means of access provided especially where repairs or renewals are being carried out. It should always be correctly supported and fitted with handrails. Planks should be free from splits and lashed down. Staging erected hastily by inexperienced personnel should be avoided.

(j) In double bottom tanks there will often be a build up of mud on the bottom of the tank and this should be removed, in particular in way of tank boundaries, suction and sounding pipes, to enable a clear assessment of the structural condition.

4.4 Equipment and tools

4.4.1 Personal protective equipment

The following protective clothing and equipment to be worn as applicable during the surveys:

(a) ***Working clothes***: Working clothes should be of a low flammablility type and be easily visible.

(b) ***Head protection***: Hard hat (metal hats are not allowed) shall always be worn outside office building/unit accommodations.

(c) ***Hand and arm protection***: Various types of gloves are available for use, and these should be used during all types of surveys. Rubber/plastic gloves may be necessary when working in cargo holds.

(d) ***Foot protection***: Safety shoes or boots with steel toe caps and non slip soles shall always be worn outside office buildings/unit accommodations. Special footwear may be necessary on slippery surfaces or in areas with chemical residues.

(e) ***Ear protection***: Ear muffs or ear plugs are available and should be used when working in noisy areas. As a general rule, you need ear protection if you have to shout to make yourself understood by someone standing close to you.

(f) ***Eye protection***: Goggles should always be used when there is danger of solid particles or dust getting into the eyes. Protection against welding arc flashes and ultraviolet light should also be considered.

(g) ***Breathing protection***: Dust masks shall be used for protection against the inhalation of harmful dusts, paint spraying and sand blasting. Gas masks and filters should be used by personnel working for short periods in an atmosphere polluted by gases or vapour.
(Self-contained breathing apparatus: Surveyors shall not enter spaces where such equipment is necessary due to unsafe atmosphere. Only those who are specially trained and familiar with such equipment should use it and only in case of emergency).

(h) ***Lifejacket***: Recommended to be used when embarking/disembarking ships offshore, from/to pilot boat.

4.4.2 Personnel survey equipment

The following survey equipment is to be used as applicable during the surveys:

(a) ***Torches***: Torches (Flashlights) approved by a competent authority for use in a flammable atmosphere shall be used in gas dangerous areas. A high intensity beam type is recommended for in-tank inspections. Torches are recommended to be fitted with suitable straps so that both hands may be free.

(b) ***Hammer***: In addition to its normal purposes the hammer is recommended for use during surveys inside units, tanks etc. as it may be most useful for the purpose of giving distress signal in case of emergency.

(c) ***Oxygen analyser/Multigas detector***: For verification of acceptable atmosphere prior to tank entry, pocket size instruments which give an audible alarm when unacceptable limits are reached are recommended. Such equipment shall have been approved by national authorities.

(d) ***Safety belts and lines***: Safety belts and lines should be worn where high risk of falling down from more than 3 meters is present.

(e) ***Radiation meter***: For the purpose of detection of ionizing radiation (X or gamma rays) caused by radiographic examination, a radiation meter of the type which gives an audible alarm upon detection of radiation is recommended.

4.4.3 Thickness measurement and fracture detection

(a) Thickness measurement is to comply with the requirements of the Classification Society concerned. Thickness measurement should be carried out at points that adequately represent the nature and extent of any corrosion or wastage of the respective structure (plate, web, etc.).

(b) Thickness measurement is normally carried out by means of ultrasonic test equipment. The accuracy of the equipment is to be proven as required.

(c) The thickness measurement is to be carried out by a qualified company certified by the relevant Classification Society.

(d) One or more of the following fracture detection procedures may be required if deemed necessary and should be operated by experienced qualified technicians:
- radiographic equipment
- ultrasonic equipment
- magnetic particle equipment
- dye penetrant

4.5 Survey at sea or anchorage

4.5.1 Voyage surveys may be accepted provided the survey party is given the necessary assistance from the shipboard personnel. The necessary precautions and procedures for carrying out the survey are to be in accordance with **4.1** to **4.4** inclusive. Ballasting systems must be secured at all times during tank surveys.

4.5.2 A communication system is to be arranged between the survey party in the spaces under examination and the responsible officer on deck.

4.6 Documentation on board

4.6.1 The following documentation is recommended to be placed on board and maintained and updated by the owner for the life of the ship in order to be readily available for the survey party.

4.6.2 Survey Report File: This file includes Reports of Surveys and Thickness Measurement Report.

4.6.3 Supporting Documents: It is recommended that the following additional documentation be placed on board, including any other information that will assist the inspection.

(a) Main structural plans of cargo holds and ballast tanks,

(b) Previous repair history,

(c) Cargo and ballast history,
(d) Inspection and action taken by ship's personnel with reference to:
- structural deterioration in general
- leakages in bulkheads and piping
- condition of coating or corrosion protection, if any

4.6.4 Prior to inspection, it is recommended that the documents on board the vessel be reviewed as a basis for the current survey.

5 Structural detail failures and repairs

5.1 General

5.1.1 The ***catalogue of structural detail failures and repairs*** contained in this section of the ***Guidelines*** collates data supplied by the IACS Member Societies and is intended to provide guidance when considering similar cases of damage and failure. The proposed repairs reflect the experience of the surveyors of the Member Societies, but it is realized that other satisfactory alternative methods of repair may be available. However, in each case the repairs are to be completed to the satisfaction of the Classification Society Surveyor concerned.

5.2 Catalogue of structural detail failures and repairs

5.2.1 The catalogue has been sub-divided into parts and areas to be given particular attention during the surveys:

Part 1 Cargo hold region

Area 1 Upper deck structure
Area 2 Side structure
Area 3 Transverse bulkhead structure
Area 4 Tween deck structure
Area 5 Double bottom structure

Part 2 Fore and aft end regions

Area 1 Fore end structure
Area 2 Aft end structure
Area 3 Stern frame, rudder arrangement and propeller shaft support

Part 3 Machinery and accommodation spaces

Area 1 Engine room structure
Area 2 Accommodation structure

Part 1 Cargo hold region

Contents

Area 1 Upper deck structure
Area 2 Side structure
Area 3 Transverse bulkhead structure
Area 4 Tween deck structure
Area 5 Double bottom structure

Area 1 Upper deck structure

Contents

1 General

2 What to look for - On-deck inspection
2.1 Material wastage
2.2 Deformations
2.3 Fractures

3 What to look for - Under-deck inspection
3.1 Material wastage
3.2 Deformations
3.3 Fractures

4 General comments on repair
4.1 Material wastage
4.2 Deformations
4.3 Fractures
4.4 Miscellaneous

Figures and/or Photographs - Area 1	
No.	**Title**
Photograph 1	Heavy corrosion of hatch coaming

Examples of structural detail failures and repairs - Area 1	
Example No.	**Title**
1	Buckling of deck plating of transverse framing system
2	Fractures at main cargo hatch corner
3-a	Fracture of welded seam between thick plate and thin plate at cross deck
3-b	Plate buckling in thin plate near thick plate at cross deck
3-c	Overall buckling of cross deck plating
4	Buckling of web beam
5-a	Fractures in the web or in the deck at the toes of the longitudinal hatch coaming termination bracket (discontinuous longitudinal hatch coaming)
5-b	Fractures in continuous longitudinal hatch coaming extension bracket
6	Fractures in web of hatch coaming stay
7-a	Fractures in hatch coaming top plate at the termination of rail for hatch cover
7-b	Fractures in hatch coaming top plate at the termination of rail for hatch cover

Examples of structural detail failures and repairs - Area 1	
Example No.	**Title**
8	Fractures in hatch coaming top plate around resting pad
9	Fracture in deck plating at the pilot ladder access of bulwarks

1 General

1.1 Deck structures outside hatches is subjected to longitudinal hull girder bending, caused by cargo distribution and wave actions. Moreover deck structures may be subjected to severe loads due to green seas on deck, excessive deck cargo or improper handling of cargo. Certain areas of the deck may also be subjected to additional compressive stresses caused by slamming or bow flare effect at the fore ship in heavy weather.

1.2 The cross deck structure between the cargo hatches is subjected to transverse compression from the sea pressure on the ship sides and in-plane bending due to torsion distortion of the hull girders under wave action. In association with this, the area around the corner of a main cargo hatch is subjected to high cyclical stress due to the combined effect of hull girder bending moment and transverse and torsional loading.

1.3 Discontinuous cargo hatch side coamings are subjected to considerable longitudinal bending stresses although not taken into account in the strength of hull girders. This will cause additional stresses at the mid length of hatches and stress concentrations at the termination of the side coaming extensions. Continuous cargo hatch side coamings are included in the strength of hull girders and are subjected to high longitudinal bending stress at the top of the coaming amidships. Termination of continuous side coamings at the fore and aft ends are particularly vulnerable to stress concentrations.

1.4 Hatch cover operations in combination with poor maintenance can result in damage to the cleats and gasket, etc. This can result in the loss of weathertight integrity of the hold spaces. Damage to the covers can also be sustained by overloading when carrying deck cargoes.

1.5 The marine environment, the humid atmosphere due to vaporization from cargo in the cargo hold, and high temperatures on deck and hatch cover plating, from the sun and heat, may result in severe corrosion of plating and stiffeners making the structure more vulnerable to the exposures described above.

1.6 Bulwarks are provided for the protection of crew and cargoes, and lashing of cargoes on deck. Although bulwarks are not taken into account in the strength of hull girders, they are subjected to considerable longitudinal bending stresses. Therefore bulwarks may suffer fractures and corrosion, especially at the termination of bulwarks, such as at pilot ladder access or expansion joints. The fractures may propagate to deck plating and cause serious damage.

1.7 The deterioration of various fittings on deck, such as ventilators, air pipes and sounding pipes, may result in serious problems regarding weather/watertightness and/or fire fighting.

1.8 If the ship is assigned timber freeboards, fittings for stowage of timber deck cargo have to be inspected in accordance with ILLC 1966. Deterioration of the fittings may cause cargoes to shift resulting in serious damage to the ship.

2 What to look for - On-deck inspection

2.1 Material wastage

2.1.1 The general condition with regard to corrosion of the deck structure, the cargo hatch coamings and the hatch covers may be observed by visual inspection. Special attention should be paid to areas where pipes, e.g. fire main, hydraulic pipes, pipes for compressed air, are fitted close to the plating, making proper maintenance of the protective coating difficult to carry out.

2.1.2 Grooving corrosion may occur at the transition between the thicker deck plating outside the line of cargo hatches and the thinner cross deck plating, especially when the difference in plate thickness is large. The difference in plate thickness causes water to gather in this area resulting in corrosion ambience which may subsequently lead to grooving.

2.1.3 Pitting corrosion may occur throughout the cross deck strip plating and on hatch covers. The combination of accumulated water with scattered residue of certain cargoes may create a corrosive reaction.

2.1.4 Wastage/corrosion may seriously affect the integrity of the steel hatch covers, and also the additional moving parts, e.g. cleats, pot-lifts, roller wheels, etc. In some ships pontoon hatch covers together with tarpaulins are used. The tarpaulins are liable to tear due to deck cargo, such as timbers, and cause heavy corrosion to the hatch covers.

2.2 Deformations

2.2.1 Plate buckling (between stiffeners) may occur in areas subjected to in-plane compressive stresses, particularly if corrosion is evident. Special attention should be paid to areas where the compressive stresses are perpendicular to the direction of the stiffening system. Such areas may be in the foreship where deck longitudinals are terminated and replaced by transverse beams (See **Example 1**), but also in the cross deck strips between hatches when longitudinal stiffening is applied (See **Examples 3-b** and **3-c**).

2.2.2 Deformed structures may be observed in areas of the deck, hatch coamings and hatch covers where cargo has been handled/loaded or mechanical equipment, e.g. hatch covers, has been operated. Also in other areas, in particular exposed deck forward, deformation may result when green seas on deck have been suffered.

2.2.3 Sagging plate panel may have been caused by lateral overloading as a consequence of excessive deck cargo, improper distribution /support of deck cargoes, sea water on deck in heavy weather, or a combination of these factors. It is essential that an under-deck inspection is also carried out to assess the extent of such damage (See **Example 4**).

2.2.4 Deformed/twisted exposed structures above deck, such as side-coaming brackets, may result from impact of cargo or cargo handling machinery due to improper handling. Such damages may also be caused by sea water on deck in heavy weather.

2.3 Fractures

2.3.1 Fractures in areas of structural discontinuity and stress concentration will normally be detected by close-up inspection. Special attention should be given to the structures at cargo hatches in general and to corners of deck openings in particular.

2.3.2 Fractures initiated in the deck plating outside the line of hatches (See **Example 2**), may develop across the deck, with the most serious consequences. Also fractures initiated in the deck plating of the cross deck strip, in particular at the transition between the thicker deck plating outside the line of cargo hatches and the thinner cross deck plating (See **Example 3-a**), may have serious consequences if not repaired immediately.

2.3.3 Other fractures that may occur in the deck plating at hatches and in connected coamings can result/originate from:

(a) Fillet weld connection of the coaming to the deck, particularly at a radiused coaming plate at the hatch corner plating.
(b) Welded attachment and shedder plate close to or on the free edge of the hatch corner plating.
(c) The geometry of the corners of the hatch openings.
(d) The termination of the side coaming extension brackets (See **Examples 5-a** and **5-b**).
(e) Grooving caused by wire ropes of cargo gear.
(f) Wasted plating.
(g) Attachments, cut-outs and notches for securing devices, and operating mechanisms for opening/closing hatch covers at the top of the coaming and/or coaming top bar, if any, at the mid-length of the hatch (See **Examples 7-a** and **7-b**).
(h) Hatch coaming stays supporting the hatch cover resting pads in case of deck loads on the hatch covers and the connection of resting pad to the top of the coaming as well as the supporting structures (See **Example 8**).

2.3.4 Fractures in deck plating often occur at the termination of bulwarks, such as pilot ladder recess, due to stress concentration. The fractures may propagate themselves resulting in serious casualty when the deck is subject to high longitudinal bending stress.

3 What to look for - Under-deck inspection

3.1 Material wastage

3.1.1 The level of wastage of under-deck stiffeners/structures may have to be established by means of thickness measurements. As mentioned previously the combination of the effects from the marine environment and the local atmosphere will give rise to high corrosion rates.

3.1.2 Severe corrosion of the hatch coaming from inside and of under deck girders may occur due to difficult access for maintenance of the protective coating. This may in turn lead to fractures (See **Photograph 1**).

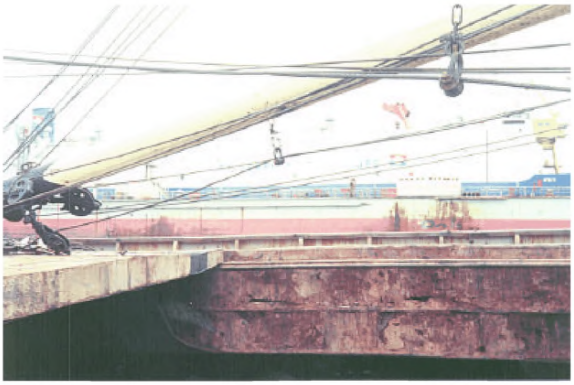

Photograph 1 Heavy corrosion of hatch coaming

3.2 Deformations

3.2.1 Buckling should be looked for in the primary supporting structure, e.g. hatch end beams and longitudinal girders beneath the longitudinal hatch coamings, if sagging of deck panels has been observed during on-deck inspection. Such buckling may also be the initial observation of damage caused by lateral overloading as a consequence of excessive deck cargo, improper distribution/support of deck cargoes, sea water on deck in heavy weather, or a combination of these causes.

3.3 Fractures

3.3.1 Fractures in the connection between the transverse bulkheads, girders/stiffeners and the deck plating may occur. This is often associated with a reduction in area of the connection due to corrosion.

3.3.2 Fractures in the primary supporting structure, e.g. hatch end beams may be found in the weld connections at the ends of the beams/girders.

4 General comments on repair

4.1 Material wastage

4.1.1 In the case of grooving corrosion at the transition between the thicker deck plating outside the ine of cargo hatches and the cross deck plating, consideration should be given to the renewal of part of, or the entire width, of the adjacent cross deck plating.

4.1.2 In the case of pitting corrosion throughout the cross deck strip plating, consideration should be given to renewal of part of or the entire cross deck plating.

4.1.3 When heavy wastage is encountered on under-deck structure, the whole or part of the structure may be cropped and renewed depending on the permissible diminution levels applied by the Classification Society concerned.

4.1.4 For wastage of cargo hatch covers a satisfactory thickness determination is to be carried out and the plating and stiffeners are to be cropped and renewed as appropriate depending on the extent of the wastage.

4.2 Deformations

4.2.1 When buckling of the deck plating has occurred, although not in association with significant corrosion, appropriate reinforcement is necessary in addition to cropping and renewal.

4.2.2 Where buckling of hatch end beams has occurred because of inadequate transverse strength, the plating should be cropped and renewed and additional panel stiffeners fitted.

4.2.3 Buckled cross deck structure due to loss in strength induced by wastage, is to be cropped and renewed as necessary. If the cross deck is stiffened longitudinally and the buckling results from inadequate transverse strength, additional transverse stiffeners should be fitted.

4.2.4 Deformations of cargo hatch covers should be cropped and partly renewed, or renewed in full, depending on the extent of the damage.

4.3 Fractures

4.3.1 Fractures in way of cargo hatch corners should be carefully considered with respect to the design details (See **Example 2**). Re-welding of such fractures is normally not considered a permanent solution. Where the difference in thickness between an insert plate and the adjacent deck plating is greater than 3 mm the edge of the insert plate should be suitably beveled. In order to reduce the residual stress arising from this repair situation, the welding sequence and procedure is to be carefully monitored and low hydrogen electrodes should be used for welding the insert plate to the adjoining structure. Where welded shedder plates are fitted into the corners of the hatch coamings the deck connection should be left unwelded.

4.3.2 In the case of fractures at the transition between the thicker deck plating outside the line of cargo hatches and the cross deck plating, consideration should be given to renewal of part or the entire width of the adjacent cross deck plating, possibly with increased thickness (See **Example 3-a**).

4.3.3 When fractures have occurred in the connection of transverse bulkheads to the cross deck structure, consideration should be given to renewing and re-welding the connecting structure beyond the damaged area with the aim of increasing the area of the connection.

4.3.4 Fractures of hatch end beams should be repaired by renewing the damaged structure, and by full penetration welding to the deck.

4.3.5 To reduce the possibility of future fractures in cargo hatch coamings the following details should be observed:

(a) Cut-outs and other discontinuities at the top of coamings and/or coaming top bar should have rounded corners (preferably elliptical or circular in shape) (See **Example 7-b**).

Any local reinforcement should be given a tapered transition in the longitudinal direction and the rate of taper should not exceed 1 in 3 (See **Example 7-a**).

(b) Fractures, which occur in the fillet weld connections to the deck of radiused coaming plates at the corners, should be repaired by replacing existing fillet welds with full penetration welding using low hydrogen electrodes or equivalent. If the fractures are extensive and recurring, the coamings should be redesigned to form square corners with the side coaming extending in the form of tapered brackets. Continuation brackets also to be arranged transversely in line with the hatch end coamings and the under-deck transverse.

(c) Cut-outs and drain holes are to be avoided in the hatch side coaming extension brackets. For fractured brackets, see **Examples 5-a** and **5-b**.

4.3.6 For cargo hatch covers, fractures of a minor nature may be veed-out and welded. For more extensive fractures, the structure should be cropped and partly renewed.

4.3.7 For fractures (and heavy corrosion) at the end of bulwarks an attempt should be made to modify the design in order to reduce the stress concentration in connection with general cropping and renewal (See **Example 9**).

4.4 Miscellaneous

4.4.1 Ancillary equipment such as cleats, rollers etc. on cargo hatch covers is to be renewed when damaged or corroded.

GENERAL CARGO SHIPS	Guidelines for Surveys, Assessment and Repair of Hull Structure	
Part 1	**Cargo hold region**	**Example No.**
Area 1	**Upper deck structure**	**1**
Detail of damage	Buckling of deck plating of transverse framing system	

Sketch of damage

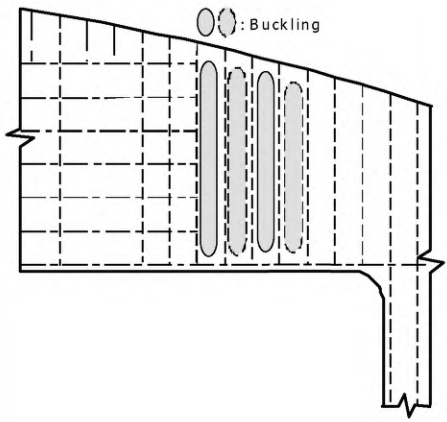

Sketch of repair

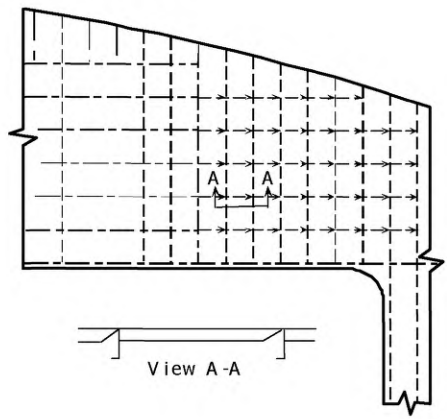

Notes on possible cause of damage

1. Excessive compressive stress due to slamming or bow flare effect.
2. Insufficient longitudinal stiffening of deck plating.

Notes on repairs

1. Buckled plating should be cropped and renewed. Longitudinal internal stiffeners should be provided. (Instead of longitudinal stiffeners, renewal by thicker deck plating can be
2. accepted.) Stress concentration may occur at the end of sniped stiffener resulting in fatigue fracture. For locations where high cyclic stress may occur, appropriate connection such as lug-connection should be considered.

GENERAL CARGO SHIPS	Guidelines for Surveys, Assessment and Repair of Hull Structure	
Part 1	**Cargo hold region**	**Example No.**
Area 1	**Upper deck structure**	**2**
Detail of damage	Fractures at main cargo hatch corner	

Sketch of damage

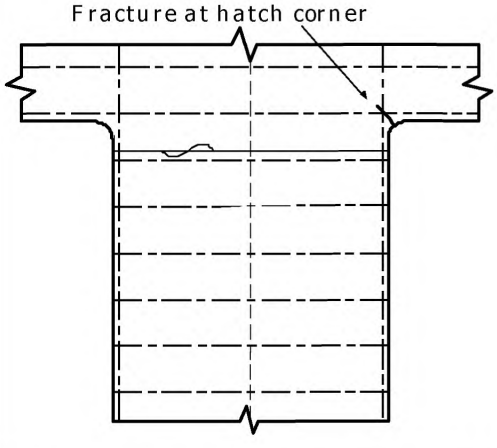

Sketch of repair

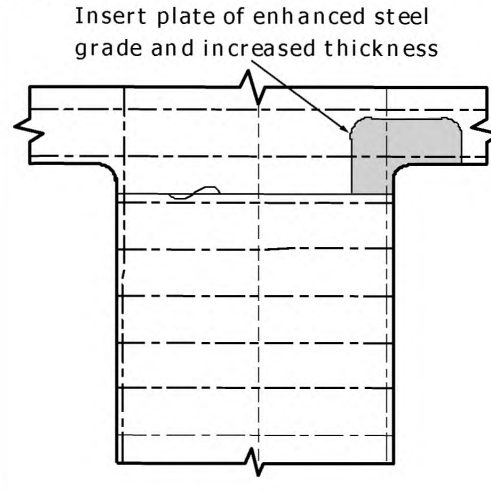

Notes on possible cause of damage

1. Stress concentration at hatch corners, i.e. radius of corner.
2. Welded attachment of shedder plate close to edge of hatch corner.
3. Wire rope groove.

Notes on repairs

1. The corner plating in way of the fracture is to be cropped and renewed. If stress concentration is primary cause, insert plate should be of increased thickness, enhanced steel grade and/or improved geometry.
   Insert plate should be continued beyond the longitudinal and transverse extent of the hatch corner radius ellipse or parabola, and the butt welds to the adjacent deck plating should be located well clear of the butts in the hatch coaming.
   It is recommended that the edges of the insert plate and the butt welds connecting the insert plates to the surrounding deck plating be made smooth by grinding. In this respect caution should be taken to ensure that the micro grooves of the grinding are parallel to the plate edge.
2. If the cause of fracture is welded attachment of shedder plate, the deck connection should be left unwelded.
3. If the cause of the fracture is wire rope groove, replacement to the original design can be accepted.

GENERAL CARGO SHIPS	Guidelines for Surveys, Assessment and Repair of Hull Structure	
Part 1	**Cargo hold region**	**Example No.**
Area 1	**Upper deck structure**	**3-a**
Detail of damage	Fracture of welded seam between thick plate and thin plate at cross deck	

Sketch of damage

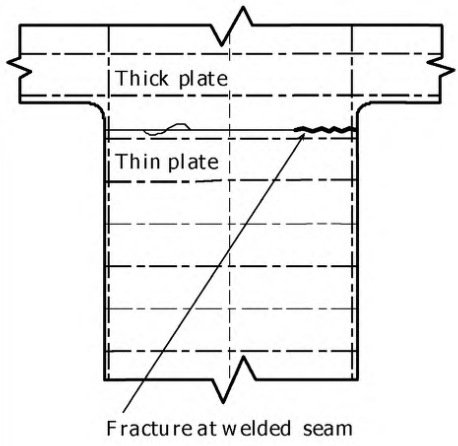

Sketch of repair

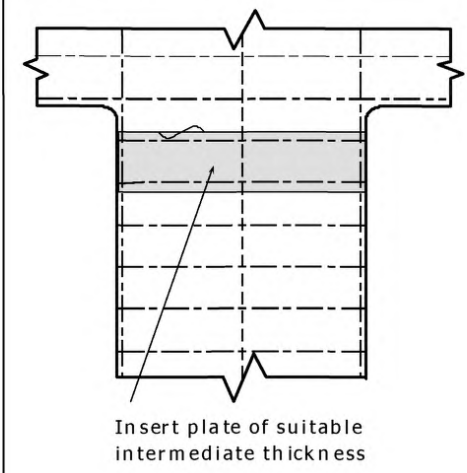

Notes on possible cause of damage

1. Stress concentration created by abrupt change in deck plating thickness.
2. In-plane bending in cross deck strip due to torsional (longitudinal) movements of ship sides.
3. Welded seam not clear of tangent point of hatch corner.

Notes on repairs

1. Insert plate of intermediate thickness is recommended.
2. Smooth transition between plates (beveling) should be considered.

GENERAL CARGO SHIPS	Guidelines for Surveys, Assessment and Repair of Hull Structure	
Part 1	**Cargo hold region**	**Example No.**
Area 1	**Upper deck structure**	**3-b**
Detail of damage	Plate buckling in thin plate near thick plate at cross deck	

Sketch of damage

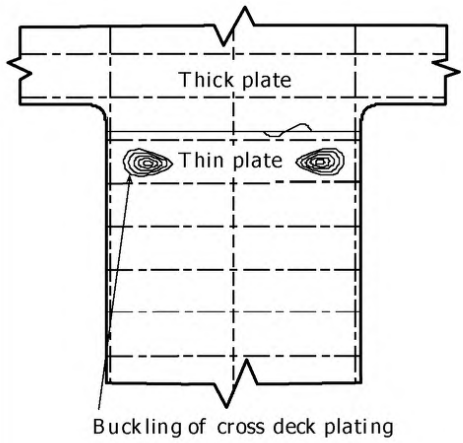

Sketch of repair

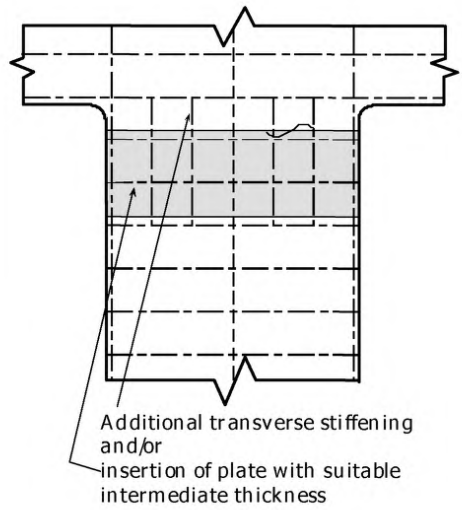

Notes on possible cause of damage

1. In-plane bending of cross deck strip due to torsional (longitudinal) movement of ship sides, often in combination with
2. corrosion.
   Insufficient transverse stiffening.

Notes on repairs

1. Transverse stiffeners extending from hatch sides towards centerline at least 10% of breadth of hatch, and/or increased plate thickness in the same area.

GENERAL CARGO SHIPS	Guidelines for Surveys, Assessment and Repair of Hull Structure	
Part 1	**Cargo hold region**	**Example No.**
Area 1	**Upper deck structure**	**3-c**
Detail of damage	Overall buckling of cross deck plating	

Sketch of damage

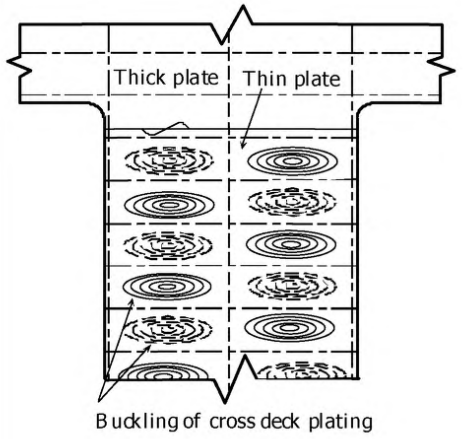

Sketch of repair

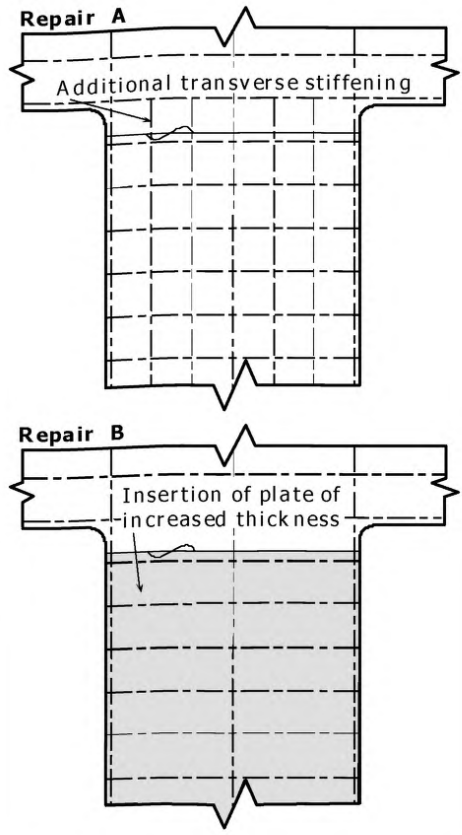

Notes on possible cause of damage

1. Transverse compression of deck due to sea load.
2. Insufficient transverse stiffening.

Notes on repairs

1. **Repair A**
   Plating of original thickness in combination with additional transverse stiffening.
2. **Repair B**
   Insertion of plating of increased thickness.

GENERAL CARGO SHIPS	Guidelines for Surveys, Assessment and Repair of Hull Structure	
Part 1	**Cargo hold region**	**Example No.**
Area 1	**Upper deck structure**	**4**
Detail of damage	Buckling of web beam	

Sketch of damage

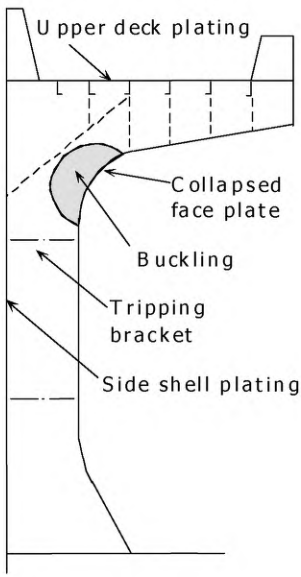

Sketch of repair

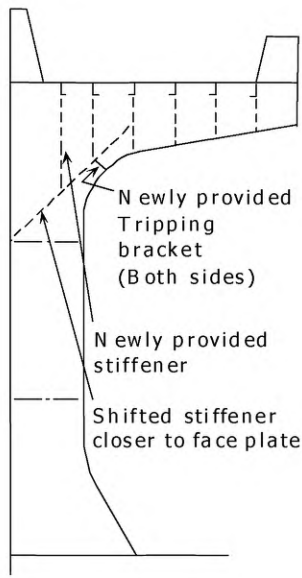

Notes on possible cause of damage

1. Overloading by green sea on deck or by excessive deck cargo.
2. Excessive corrosion.
3. Insufficient/improper web stiffening.

Notes on repairs

1. Buckled part is to be cropped and renewed .
2. If corrosion is not the cause, renewal by thicker plate (web and/or face) and/or reinforcement by stiffener and tripping bracket should be considered.

.

GENERAL CARGO SHIPS	Guidelines for Surveys, Assessment and Repair of Hull Structure	
Part 1	**Cargo hold region**	**Example No.**
Area 1	**Upper deck structure**	**5-a**
Detail of damage	Fractures in the web or in the deck at the toes of the longitudinal hatch coaming termination bracket (discontinuous longitudinal hatch coaming)	

Sketch of damage

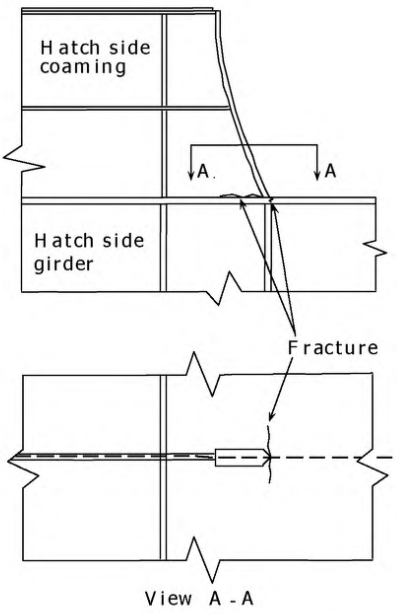

Sketch of repair

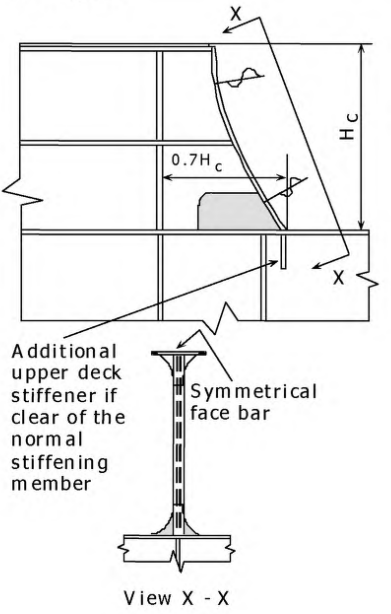

Notes on possible cause of damage

1. This damage is caused by stress concentrations attributed to the design of the bracket.

Notes on repairs

1. The design of the bracket can be altered as shown above, however, it is to be ensured that an additional under deck stiffener is provided at the toe of the termination bracket, where the toe is clear of the normal stiffening member.
2. Full penetration weld for a distance of 0.15 H_C from toe of side coaming termination bracket and for connection of athwartship gusset bracket to deck.
3. The fracture in deck plating to be veed-out and rewelded or deck plating cropped and part renewed as appropriate, using low hydrogen electrodes for welding.

GENERAL CARGO SHIPS	Guidelines for Surveys, Assessment and Repair of Hull Structure	
Part 1	**Cargo hold region**	**Example No.**
Area 1	**Upper deck structure**	**5-b**
Detail of damage	Fractures in continuous longitudinal hatch coaming extension bracket	

Sketch of damage

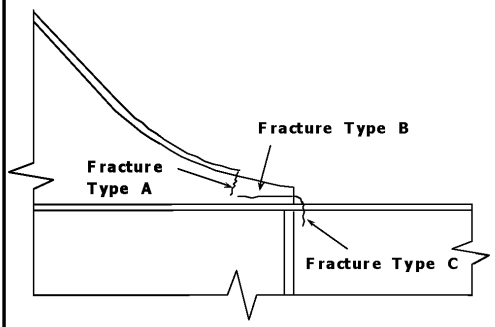

Sketch of repair

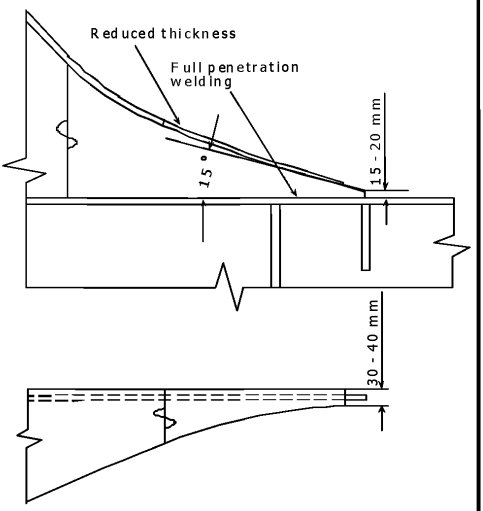

Notes on possible cause of damage

1. Flange force at the end of the flange too high due to insufficient tapering (**Fracture Type A**, propagating in the
2. web).
   Shear force in the web plate too high due to insufficient reduction of the web height at the end (**Fracture Type B**, propagating in the web at the undercut or
3. HAZ of the fillet weld).
   Insufficient support of the extension bracket below the deck (**Fracture Type C**, starting from undercut or HAZ of the fillet weld and propagating in the deck plating).

Notes on repairs

1. Extend the extension bracket as long as possible to arrange a gradual
2. transition.
   Reduce the web height at the end of the bracket; in case of high stress areas grind smooth the transition to the deck
3. plating welding.
   Reduce the cross sectional area of the
4. flange at the end as far as possible.
   Provide longitudinal structure in way of the web of the extension bracket to the next transverse structure or provide a new transverse structure.

GENERAL CARGO SHIPS	Guidelines for Surveys, Assessment and Repair of Hull Structure	
Part 1	**Cargo hold region**	**Example No.**
Area 1	**Upper deck structure**	**6**
Detail of damage	Fractures in web of transverse hatch coaming stay	

Sketch of damage

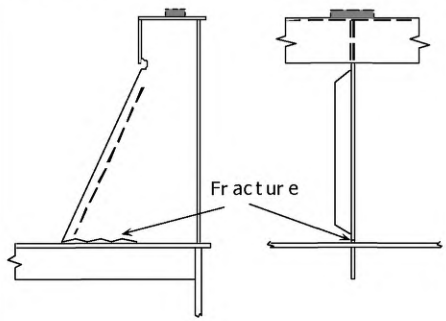

Sketch of repair

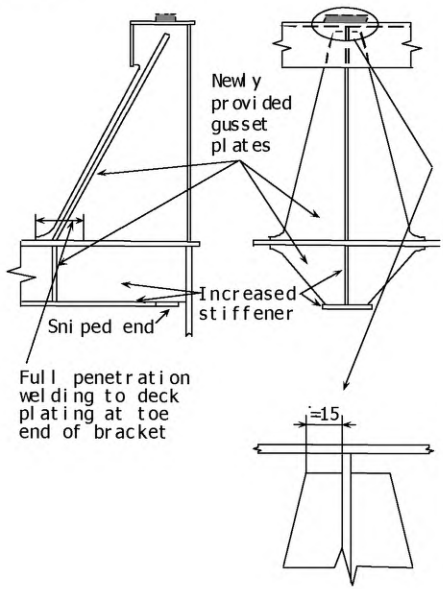

Notes on possible cause of damage

1. Insufficient consideration of the horizontal friction forces in way of the resting pads for hatch cover.

Notes on repairs

1. Modification of the design of the hatch coaming stay.
2. Full penetration welding between gusset plates and deck plating.
3. Strengthening and continuation of the structure below the deck.
4. Use pads with smaller coefficient of friction.

GENERAL CARGO SHIPS	Guidelines for Surveys, Assessment and Repair of Hull Structure	
Part 1	**Cargo hold region**	**Example No.**
Area 1	**Upper deck structure**	**7-a**
Detail of damage	Fractures in hatch coaming top plate at the termination of rail for hatch cover	

Sketch of damage

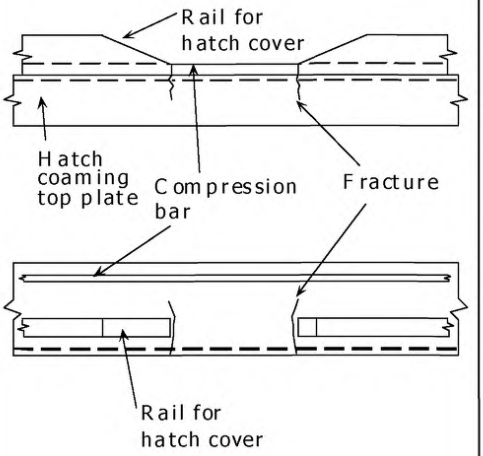

Sketch of repair

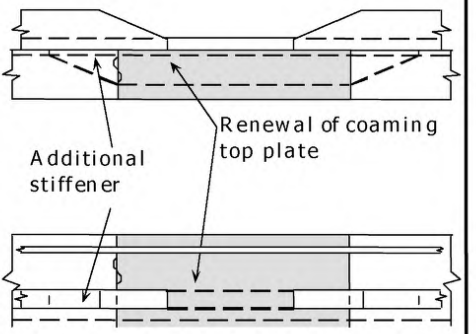

Notes on possible cause of damage

1. Stress concentration at the termination of the rail for hatch cover.

Notes on repairs

1. Fractured plate is to be cropped and part renewed.
2. Thicker insert plate and/or reinforcement by additional stiffener under the top plate should be considered. Also refer to **Example 7-b**.

GENERAL CARGO SHIPS	Guidelines for Surveys, Assessment and Repair of Hull Structure	
Part 1	**Cargo hold region**	**Example No.**
Area 1	**Upper deck structure**	**7-b**
Detail of damage	Fractures in hatch coaming top plate at the termination of rail for hatch cover	

Sketch of damage

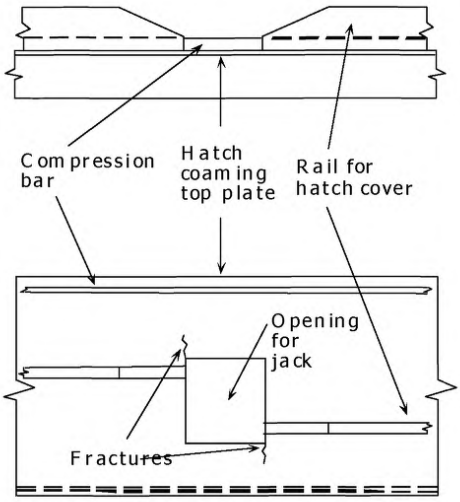

Sketch of repair

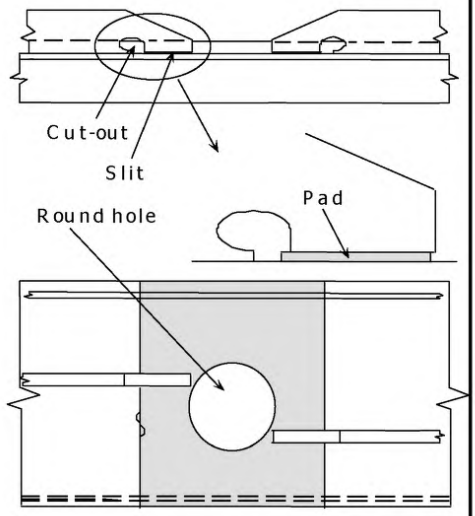

Notes on possible cause of damage

1. Stress concentration at the termination of the rail for hatch cover.

Notes on repairs

1. Fractured plate is to be cropped and part renewed.
2. Thicker insert plate and/or reduction of stress concentration adopting large radius should be considered.
   Or cut-out in the rail and detachment of the welds as shown in the above drawing should be considered in order to reduce the stress of the corner of the opening.

GENERAL CARGO SHIPS	Guidelines for Surveys, Assessment and Repair of Hull Structure	
Part 1	**Cargo hold region**	**Example No.**
Area 1	**Upper deck structure**	**8**
Detail of damage	Fractures in hatch coaming top plate around resting pad	

Sketch of damage

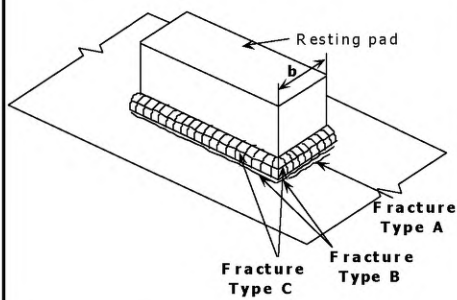

Fracture Type A:
Starting in way of the undercut or HAZ of the transverse fillet weld and propagating in the top plating.

Fracture Type B:
Starting in way of the undercut or HAZ of the longitudinal fillet weld and propagating in the top plating.

Fracture Type C:
Starting and propagating in fillet weld

Sketch of repair

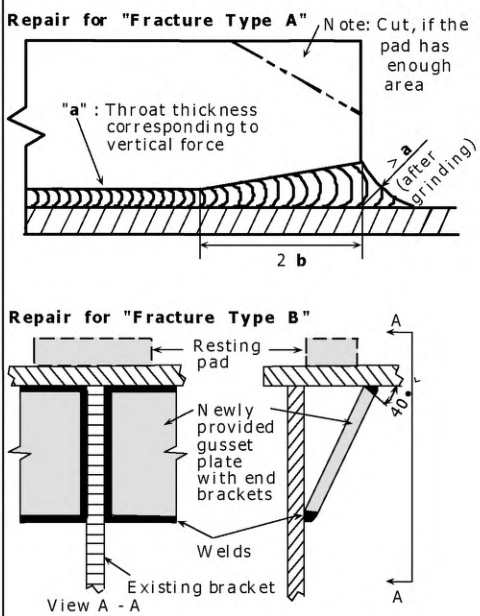

Notes on possible cause of damage

1. **Fracture Type A**:
   Inappropriate transition from the hatch coaming top plating to the resting pad in respect to longitudinal stresses.
2. **Fracture Type B**:
   Insufficient support of the resting pad below the top plating.
3. **Fracture Type C**:
   Insufficient throat thickness of the fillet weld in relation to the vertical forces.

Notes on repairs

1. **Fracture Type A**:
   Modification of the transverse fillet weld according to the sketch; in some cases smoothing of the transition by grinding is acceptable.
2. **Fracture Type B**:
   Strengthening of the structures below the top plating according to the sketch.
3. **Fracture Type C**:
   Increasing the throat thickness corresponding to the acting vertical forces.

GENERAL CARGO SHIPS	Guidelines for Surveys, Assessment and Repair of Hull Structure	
Part 1	**Cargo hold region**	**Example No.**
Area 1	**Upper deck structure**	**9**
Detail of damage	Fracture in deck plating at the pilot ladder access of bulwarks	

Sketch of damage

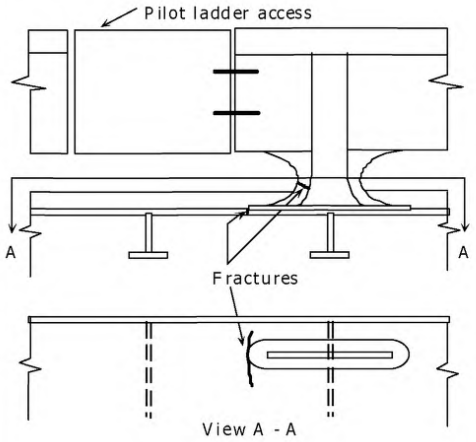

Sketch of repair

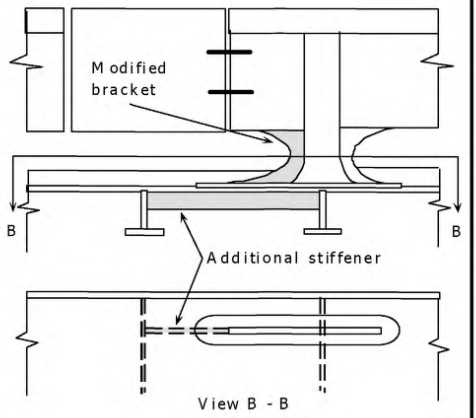

Notes on possible cause of damage

1. Stress concentration at the termination of bulwarks.

Notes on repairs

1. Fractured deck plating should be cropped and part renewed.
2. Reduction of stress concentration should be considered. In the above figure gusset plate was replaced with soft type for the fracture in gusset plate and pad plate was increased. Additional stiffeners were provided for the fracture in deck plating.

Area 2 Side structure

Contents

1 General

2 What to look for - Internal inspection
2.1 Material wastage
2.2 Deformations
2.3 Fractures

3 What to look for - External inspection
3.1 Material wastage
3.2 Deformations
3.3 Fractures

4 General comments on repair
4.1 Material wastage
4.2 Deformations
4.3 Fractures

Figures and/or Photographs - Area 2	
No.	**Title**
Figure 1	Potential problem areas
Photograph 1	Leakage from side shell plating due to heavy corrosion
Photograph 2	Timber carriers listing due to ingress of water

Examples of structural detail failures and repairs - Area 2	
Example No.	**Title**
1	Fracture in side shell frame at lower bracket
2	Fractures in side shell frame/lower bracket and side shell plating near tank top
3	Adverse effect of corrosion on the frame of forward/afterward hold
4	Fractures at the supporting brackets in way of collision bulkhead, (with no side shell panting stringers fitted in hold)
5	Fractures in way of continuation/extension bracket in aftermost hold at the engine room bulkhead
6	Fracture in way of continuation/extension brackets at the end of deep cargo tank

1 General

1.1 The shear capacity is the main contribution of the side shell to the general structural strength of the ship's hull. Shear stresses arise as a consequence of local unbalance longitudinally between the vertical forces of cargo loads and steel-weight, and the up-thrust of buoyancy.

1.2 In addition to the contribution to the general structural strength of the ship's hull, the side shell is the defense against ingress/leakage of sea water, when subjected to static sea pressure and dynamic effects of ship movement and wave actions in heavy weather.

1.3 The ship side may suffer damage due to contact with the quay during berthing and impacts from cargo and/or equipment during cargo handling.

1.4 The marine environment (such as ultraviolet rays, high temperature, alternate wet and dry conditions due to wave or change of loading conditions etc.) in association with the characteristics of certain cargoes (e.g. wet timber loaded from sea water) may result in deterioration of coating and severe corrosion of plating and stiffeners. This situation makes the structure more vulnerable to the exposures described above.

1.5 The transition regions are subject to stress concentrations due to structural discontinuities. The side shell plating in fore and aft transition regions is also subject to panting. The lack of continuity of the longitudinal structure, and the greater slenderness and flexibility of the side structure near the more rigid end structures, can result in damages.

1.6 A summary of potential problem areas is shown in **Figures 1 (a)** and **(b)**. Serious consequences of damaged ship sides are illustrated in **Photographs 1** and **2**.

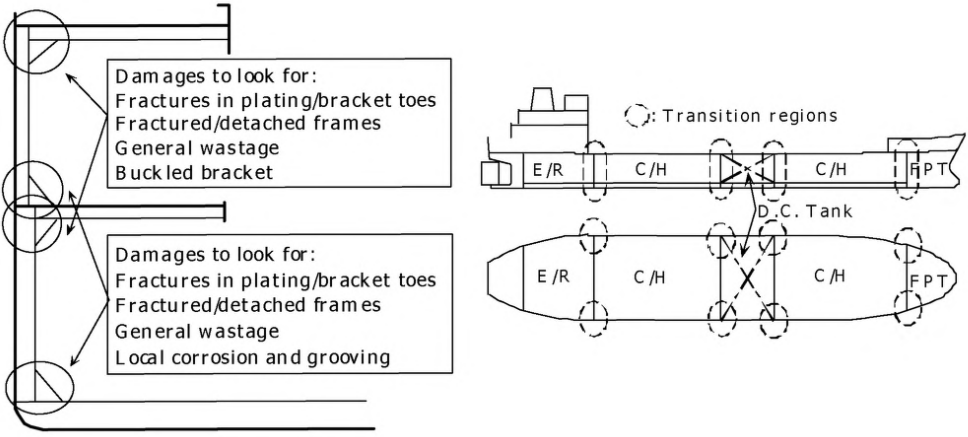

(a) Side shell frames **(b) Transition regions**

Figure 1 Potential problems areas



Photograph Leakage from side shell plating due to heavy corrosion



Photograph 2 Timber carrier listing due to ingress of water

2 What to look for - Internal inspection

2.1 Material wastage

2.1.1 Attention is drawn to the fact that the tween deck and side shell frames may be significantly weakened by loss of thickness although diminution and deformations may not be apparent. Inspection should be made after the removal of any scale or rust deposit and thickness measurement gauging may be necessary, particularly if the corrosion is smooth and uniform.

2.1.2 It is not unusual to find highly localised corrosion on uncoated side shell frames and their end connections. The loss in the thickness is normally greater close to the side shell plating rather than near the faceplate (See **Example 2**). This situation, if not remedied, can result in loss of support to the shell plating and hence large inboard deflections. In many cases such deflections of the side shell plating can generate fractures in the shell plating and fracturing and buckling of the frame web plates and eventually result in detachment of the end brackets from the tank top.

2.1.3 Heavy wastage and possible grooving of the framing in forward/ aft hold, where side shell plating is oblique to the frames it may have a more severe effect as shown in **Example 3**.

2.2 Deformations

2.2.1 It is normally to be expected that the lower region of the frames will receive some level of damage during operational procedures, e.g. unloading with grabs or loading of logs. This can range from damage of the frame end bracket face plates to large physical deformations of a number of frames and in some cases can initiate fractures.

These individual frames and frame brackets, if rendered ineffective, will place

additional load on the adjacent frames and failure by the "domino effect" can in many cases extend over the side shell of a complete hold.

2.3 Fractures

2.3.1 Fractures are more evident at the toes of the upper and lower bracket(s) or at the connections between brackets and frames. In most cases the fractures may be attributed to stress concentrations and stress variations created, in the main, by loads from the seaway. The stress concentrations can be a result of poor detail design and/or bad workmanship. Localised fatigue fracturing, possibly in association with localised corrosion, may be difficult to detect and it is stressed that the areas in question should receive close attention during periodical surveys.

2.3.2 Fractures in shell plating and supporting or continuation/extension brackets at collision bulkheads, deep tank bulkheads, and engine room bulkheads are frequently found by close-up inspection.

3 What to look for - External inspection

3.1 Material wastage

3.1.1 The general condition with regard to wastage of the ship's sides may be observed by visual inspection from the quayside of the area above the waterline. Special attention should be paid to areas where the painting has deteriorated.

3.2 Deformations

3.2.1 The side shell should be carefully inspected with respect to possible deformations. The side shell below water line can usually only be inspected when the ship is dry docked. Therefore special attention with respect to possible deformations should be made during dry-docking taking into account the period until the next dry-docking. When deformation of the shell plating is found, the area should also be inspected internally since even a small deformation may indicate serious damage to the internal structure.

3.3 Fractures

3.3.1 Fractures in the shell plating in way of ballast tanks may be detected above the water line and below the water line during dry-docking in a wet area in contrast to otherwise dry shell plating.

4 General comments on repair

4.1 Material wastage

4.1.1 In general, where part of the hold framing and/or associated end brackets has corroded to the permissible minimum thickness at the time of inspection (judged to have sufficient corrosion margin until next major survey), then the normal practice is to crop and renew the area affected. If the remaining section of the frames/brackets marginally remain within the allowable limit, surveyors should request that affected frames and associated end brackets be renewed. Alignment of end brackets with the structure inside the double

bottom or the opposite side of tween deck is to be ensured. It is recommended that repaired areas be coated.

4.2 Deformations

4.2.1 The structure should be restored to its original shape and position either by fairing in place or by cropping and renewing the affected structure, based on the depth and extent of the deformations.

4.3 Fractures

4.3.1 All fractures in side shell frames or their end brackets are to be repaired.

4.3.2 Fractured parts of supporting brackets and continuation/extension brackets at collision bulkhead, deep tank bulkheads, and engine room bulkhead are to be part renewed. Modification of shape and possible extension of the brackets should be considered. Affected shell plating in way of the damaged brackets should be cropped and renewed.

GENERAL CARGO SHIPS	Guidelines for Surveys, Assessment and Repair of Hull Structure	
Part 1	**Cargo hold region**	**Example No.**
Area 2	**Side structure**	**1**
Detail of damage	Fracture in side shell frame at lower bracket	

Sketch of damage

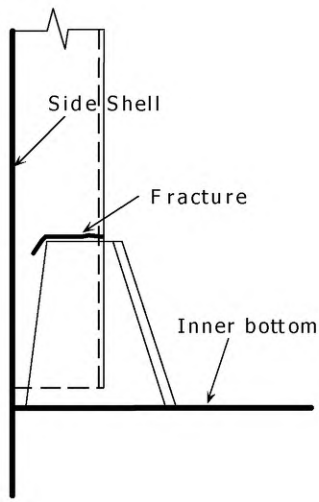

Sketch of repair

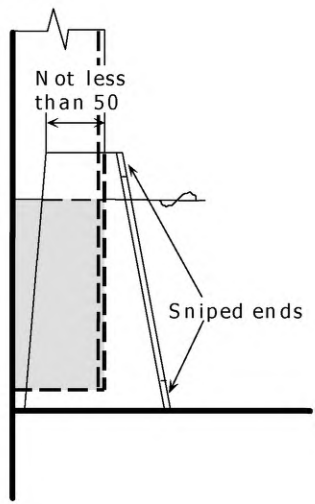

Notes on possible cause of damage

1. This type of damage is caused due to stress concentration.

Notes on repairs

1. For small fractures, e. g. hairline fractures, the fracture can be veed-out, welded up, ground, examined by NDT for fractures, and rewelded.
2. For larger/significant fractures consideration is to be given to cropping and partly renewing/ renewing the frame brackets. If renewing the brackets, end of frames can be sniped to soften them.
3. If felt prudent, soft toes are to be incorporated at the boundaries of the bracket to the inner bottom plating.

GENERAL CARGO SHIPS	Guidelines for Surveys, Assessment and Repair of Hull Structure	
Part 1	**Cargo hold region**	**Example No.**
Area 2	**Side structure**	**2**
Detail of damage	Fractures in side shell frame/lower bracket and side shell plating near tank top	

Sketch of damage

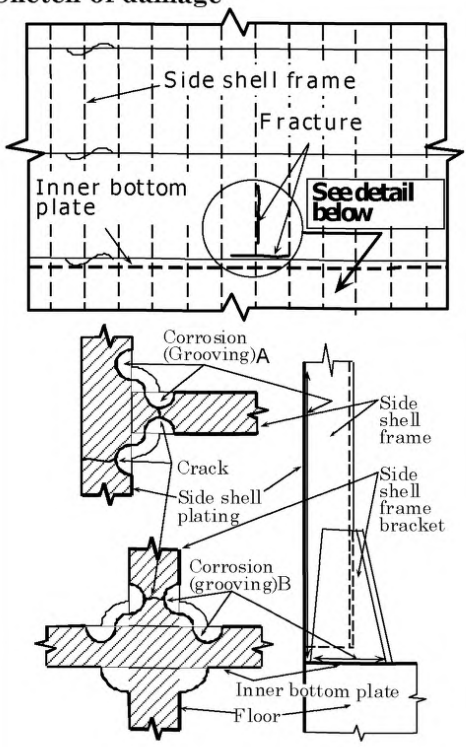

Sketch of repair

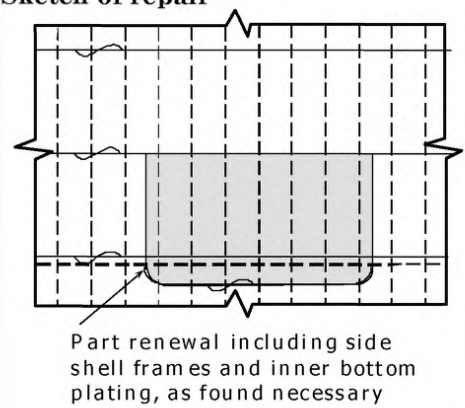

Notes on possible cause of damage

1. Fracture in side shell plating along side shell frame: Heavy corrosion (grooving) along side shell frame (See A).
2. Fracture in side shell plating along tank top: Heavy corrosion (grooving) along tank top (See B) resulting detachment of side shell frame bracket from inner bottom plating.

Notes on repairs

1. Sketch of repair applies when damage extends over several frames.
2. Isolated fractures may be repaired by veeing-out and rewelding.
3. Isolated cases of grooving may be repaired by build up of welding.

GENERAL CARGO SHIPS	Guidelines for Surveys, Assessment and Repair of Hull Structure	
Part 1	**Cargo hold region**	**Example No.**
Area 2	**Side structure**	**3**
Detail of damage	Adverse effect of corrosion on the frame of forward/afterward hold	

Sketch of damage

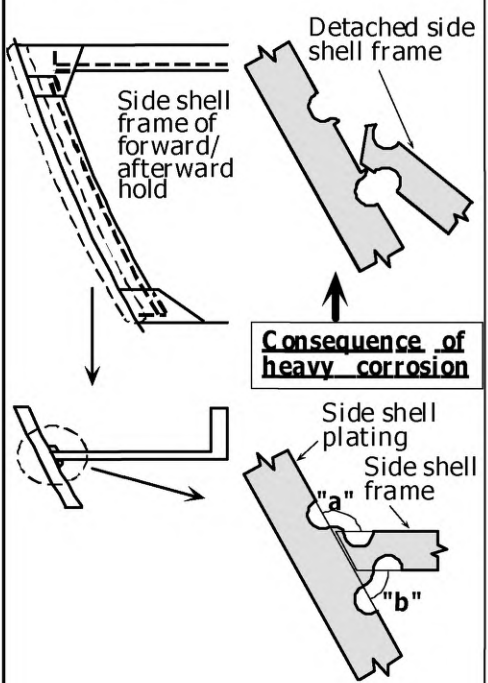

Sketch of repair

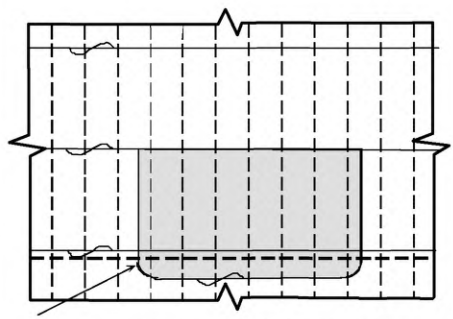

1. Part renewal including side shell frames and inner bottom plating, as found necessary
2. Deep penetration welding at the connections of side shell frames to side shell plating

Notes on possible cause of damage

1. Heavy corrosion (grooving) of side shell frame along side shell plating and difference of throat thickness "**a**" from "**b**".
   (Since original throat thickness of "**a**" is usually smaller than that of "**b**", if same welding procedure is applied, the same corrosion has a more severe effect on "**a**", and may cause collapse and/or detachment of side shell frame.)

Notes on repairs

1. Sketch of repair applies when damage extends over several frames.
2. Isolated fractures may be repaired by veeing-out and rewelding.
3. Isolated cases of grooving may be repaired by build up of welding.

GENERAL CARGO SHIPS	Guidelines for Surveys, Assessment and Repair of Hull Structure	
Part 1	**Cargo hold region**	**Example No.**
Area 2	**Side structure**	**4**
Detail of damage	Fractures at the supporting brackets in way of the collision bulkhead, (with no side shell panting stringers fitted in hold)	

Sketch of damage

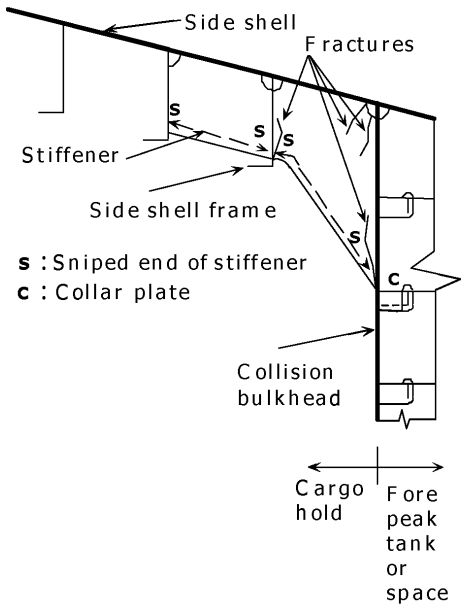

Sketch of repair

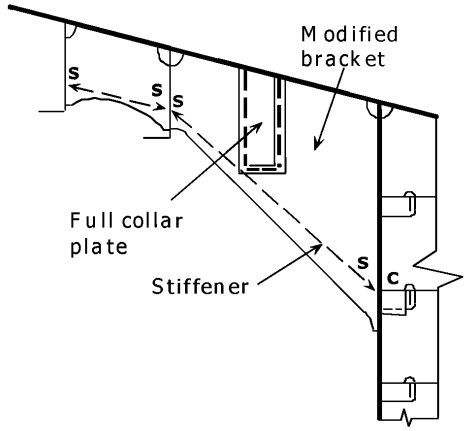

Notes on possible cause of damage

1. Insufficient bracket size resulting in high stress due to load cantilevered from side frame.
2. Stress concentration at toe of bracket and misalignment between bracket and stringer in fore peak tank or space.

Notes on repairs

1. The extended bracket arm connection to the collision bulkhead is to have a soft toe, and any cut-outs for stiffeners in the fore peak tank or space are to be collared when situated in the vicinity of the bracket toe.
2. When fractures have extended into the side shell or bulkhead plating, the plating is to be cropped and part renewed.

GENERAL CARGO SHIPS	Guidelines for Surveys, Assessment and Repair of Hull Structure	
Part 1	**Cargo hold region**	**Example No.**
Area 2	**Side structure**	**5**
Detail of damage	Fractures in way of continuation /extension brackets in aftermost hold at the engine room bulkhead	

Sketch of damage

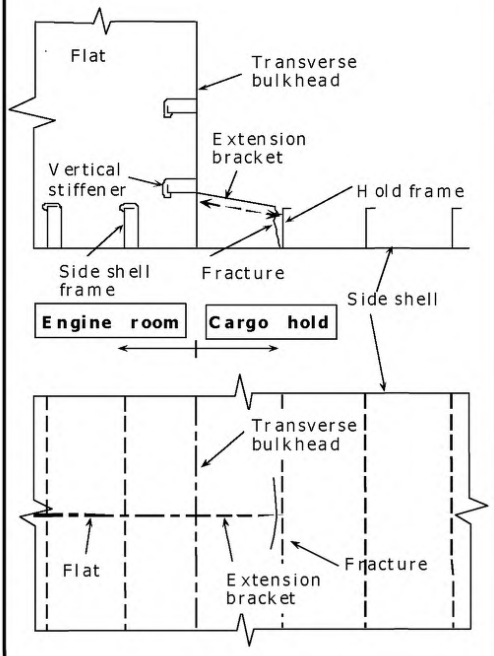

Sketch of repair

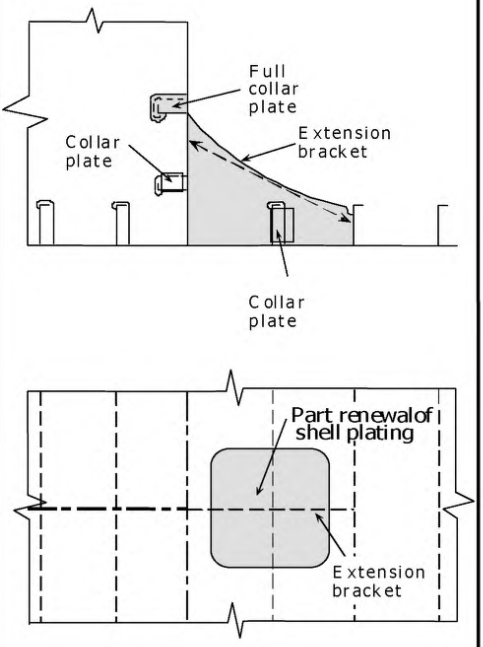

Notes on possible cause of damage

1. Damage caused by stress concentration leading to fatigue fracture on side shell. This will be exacerbated because of the greater flexibility of the hold structure in relation to the engine room structure.

Notes on repairs

1. The fractured shell plating is to be cropped and part renewed as
2. necessary.
   Extension bracket is to be modified and collar plates to cut-outs in engine room flat are to be installed.

GENERAL CARGO SHIPS	Guidelines for Surveys, Assessment and Repair of Hull Structure	
Part 1	**Cargo hold region**	**Example No.**
Area 2	**Side structure**	**6**
Detail of damage	Fractures in way of continuation/extension brackets at the end of deep cargo tank	

Sketch of damage

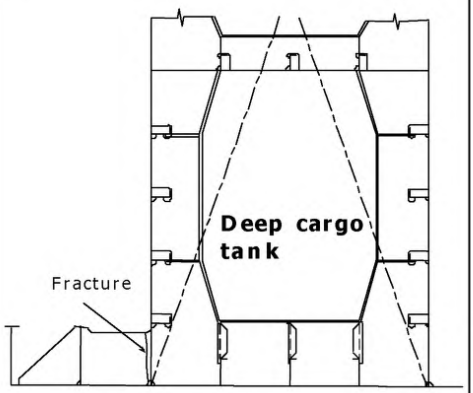

Sketch of repair

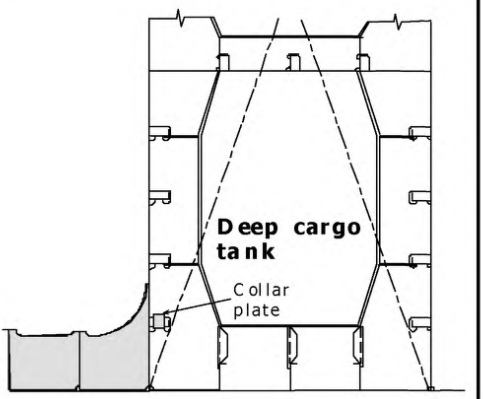

Notes on possible cause of damage

1. Damage caused by stress concentration leading to fatigue fracture on side shell. This will be exacerbated because of the greater flexibility of the ordinary hold structure in relation to the deep cargo tank structure.

Notes on repairs

1. The fractured shell plate is to be cropped and part renewed as necessary.
2. Brackets should be modified.

Area 3 Transverse bulkhead structure

Contents

1 General

2 What to look for
2.1 Material wastage
2.2 Deformations
2.3 Fractures

3 General comments on repair
3.1 Material wastage
3.2 Deformations
3.3 Fractures

Figures and/or Photographs - Area 3	
No.	Title
Figure 1	Transverse bulkhead - Potential problems areas

Examples of structural detail failures and repairs - Area 3	
Example No.	Title
1	Corrosion along inner bottom or tween deck plating
2	Shear buckling in transverse bulkhead

1 General

1.1 Watertight transverse bulkheads are usually plane bulkheads stiffened vertically.

1.2 The opportunity is taken to emphasize that for ordinary transverse watertight bulkheads, in addition to withstanding water pressure in an emergency situation, i.e. flooding, the bulkhead structures constitute main structural strength elements in the structural design of the intact ship. Ensuring that acceptable strength is maintained for these structures is therefore of major importance.

The structure may sometimes appear to be in good condition when it is in fact excessively corroded. In view of this, appropriate access arrangements as indicated in **Chapter 4 Survey planning, preparation and execution** of the guidelines, should be provided to enable a proper close-up inspection and thickness measurement (See **Figure 1**).

1.3 Deformation of the plating may lead to the failure and collapse of the bulkhead under water pressure in an emergency situation.

1.4 It is important to realize that in the event of one hold flooding, the transverse watertight bulkheads should prevent progressive flooding and possible consequent sinking.

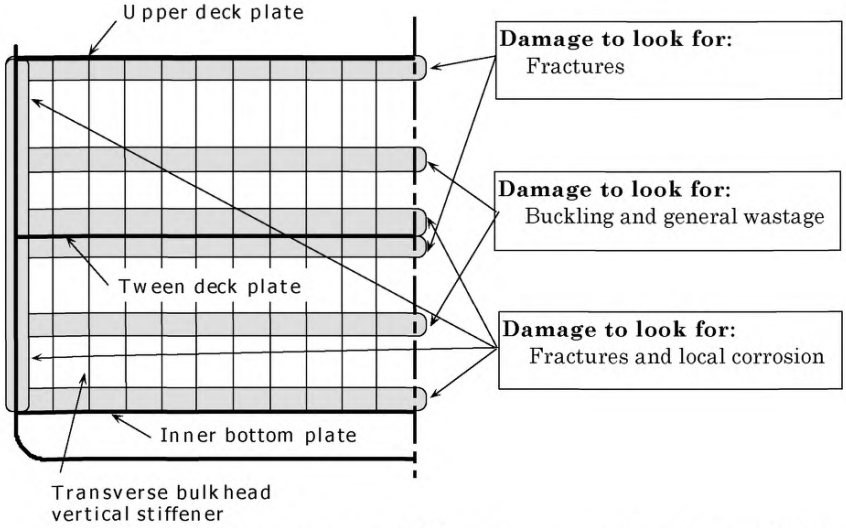

Figure 1 Transverse bulkhead - potential problem areas

2 What to look for

2.1 Material wastage

2.1.1 Excessive corrosion, in particular at the bottom of the bulkheads. This is created by the corrosive effect of cargo and environment, in particular when the structure is not coated.

2.1.2 If coatings have broken down and there is evidence of corrosion, it is recommended that random thickness measurements be taken to establish the level of diminution.

2.1.3 Where the terms and requirements of the periodical survey dictate thickness measurement, or when the Surveyor deems necessary, it is important that the extent of the gauging be sufficient to determine the general condition of the structure.

2.2 Deformations

2.2.1 Deformation due to mechanical damage is often found in bulkhead structure.

2.2.2 When the bulkhead has sustained serious uniform corrosion, the bulkhead may suffer shear buckling. Evidence of buckling may be indicated by the peeling of paint or rust. Where, however, deformation resulting from bending or shear buckling has occurred on a bulkhead with a small diminution in thickness, this could be due to poor design or overloading and this aspect should be investigated before proceeding with repairs.

2.3 Fractures

2.3.1 Fractures occur at the boundaries of bulkheads, particularly in way of tank top and side shell.

3 General comments on repair

3.1 Material wastage

3.1.1 When the scantlings of transverse watertight bulkheads have reached the diminution levels permitted by the Classification Society involved, the wasted plating and stiffeners are to be cropped and renewed.

3.3 Deformations

3.3.1 If the deformation is local and of a limited extent, it could generally be faired out. Deformed plating in association with a generalized reduction in thickness should be partly or completely renewed.

3.3.2 Buckling of the bulkhead plating can also occur in way of the side shell resulting from contact damage and this is usually quite obvious. In such cases the damaged area is to be cropped and partly renewed. If the deformation is extensive, replacement of the plating, partly or completely, may be necessary. If the deformation is not in association with generalized reduction in thickness or due to excessive loading, additional strengthening should be considered.

3.2 Fractures

3.2.1 Fractures that occur at the boundary weld connections as a result of latent weld defects should be veed-out, appropriately prepared and re-welded preferably using low hydrogen electrodes or equivalent.

3.2.2 For fractures other than described in **3.2.1** re-welding may not be a permanent solution and an attempt should be made to improve the design and construction in order to obviate a recurrence.

GENERAL CARGO SHIPS	Guidelines for Surveys, Assessment and Repair of Hull Structure	
Part 1	**Cargo hold region**	**Example No.**
Area 3	**Transverse bulkhead structure**	**1**
Detail of damage	Corrosion along inner bottom or tween deck plating	

Sketch of damage

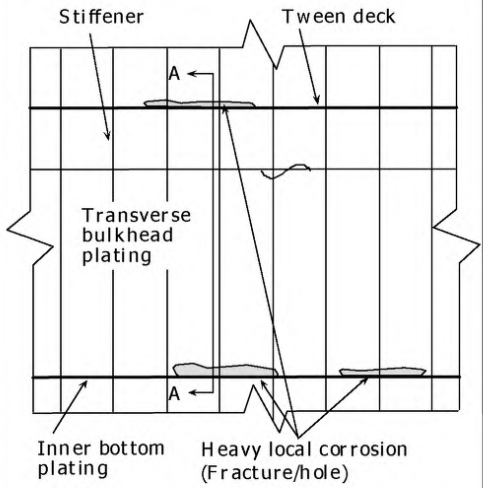

Note: Regarding "**View A-A**", refer to **Example 2** of **Area 2** of this part

Sketch of repair

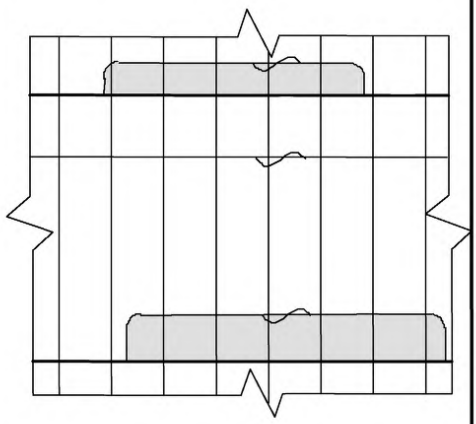

Notes on possible cause of damage

1. Heavy corrosion including grooving along inner bottom plating or tween deck due to poor drainage.

Notes on repairs

1. The extent of the renewal should be determined carefully. If the renewal plate (original thickness) is welded to thin plate (corroded plate), it may cause stress concentration and cause
2. fracture.
   Protective coating should be applied.

GENERAL CARGO SHIPS	Guidelines for Surveys, Assessment and Repair of Hull Structure	
Part 1	**Cargo hold region**	**Example No.**
Area 3	**Transverse bulkhead structure**	**2**
Detail of damage	Buckling in transverse bulkhead	

Sketch of damage

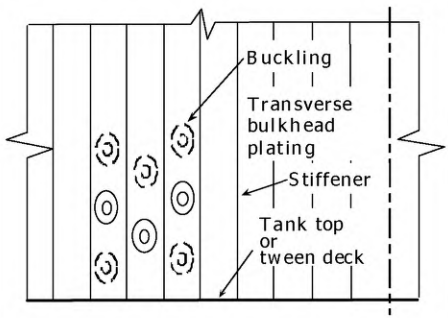

Sketch of repair

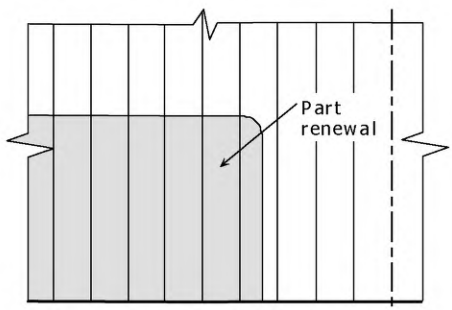

Notes on possible cause of damage

1. Heavy general corrosion.

Notes on repairs

1. The extent of the renewal should be determined carefully. If the renewal plating (original thickness) is welded to thin plating (corroded plating), it may cause stress concentration and fracture.
2. Protective coating should be applied.

Area 4 Tween deck structure

Contents

1 General

2 What to look for
2.1 Material wastage
2.2 Deformations
2.3 Fractures

3 General comments on repair
3.1 Material wastage
3.2 Deformations
3.3 Fractures

Examples of structural detail failures and repairs - Area 4	
Example No.	Title
1	Sagging of deck panel/buckling of cantilever beam

1 General

1.1 A main design principle of the tween deck is to provide easy access to cargo stowed on and underneath the deck. Therefore obstructions such as hatch coamings and deep under deck supporting girders, are usually avoided. The tween deck's main structure consists of cantilever beams supported only by the ship's side structure and cantilever girders supported only by the transverse bulkhead structure (cantilever girders). In some cases the structure may be additionally supported by pillars.

1.2 The design of the tween deck makes it particularly vulnerable to excess loads of cargo and cargo inertia forces in extreme weather conditions.

2 What to look for

2.1 Material wastage

2.1.1 Heavy wastage along the boundaries at ship's sides and at transverse bulkheads may occur as a result of seawater accumulated from wet cargo due to poor drainage. Such damages are related to those suffered at the lower end of side structures and transverse bulkhead structures (See **Area 2**, **Example 2** and **Area 3**, **Example 1**).

2.2 Deformations

2.2.1 Deformed structure may be observed near hatch openings where cargo and/ or hatch cover pontoons may have bumped into the structure during lift on or lift off operations.

2.2.2 Sagging of plate panels may be caused by lateral overloading as a consequence of excessive cargo loads, improper distribution /support of cargo loads, excessive inertia forces imposed by the cargo in extreme weather conditions, or a combination of these causes. It is essential that an under-deck inspection also be carried out to assess the extent of such damage (See **Example 1**). If the tween deck is supported by pillars, excessive loads could be transmitted to the double bottom structure (inner bottom plating, floors, girders) which could be damaged. Therefore inspection of double bottom tanks may be necessary (See **Area 5**, **Example 2**).

2.3 Fractures

2.3.1 Fatigue fractures are not a common problem on tween decks due to the generally low level of dynamic forces. Fractures may, however, occur in combination with corrosion and deformations described above.

3 General comments on repair

3.1 Material wastage

3.1.1 Where parts of the tween deck plating have corroded to the permissible minimum thickness the normal practice is to crop and renew the area affected. Surveyors should request that adjacent areas that remain

marginally within the allowable limit should also be renewed. It is recommended that repaired areas be coated.

3.2 Deformations

3.2.1 For deformations caused by abusive handling or obvious overloading, the damaged structure should be cropped and renewed to original scantlings.

3.2.2 If the cause of the deformations is not clear and design weakness is suspected, an appropriate reinforcement is to be considered in addition to cropping and renewal of the damaged part.

3.3 Fractures

3.3.1 The proposed repair for corrosion and deformations described above also apply when associated fractures occur.

GENERAL CARGO SHIPS	Guidelines for Surveys, Assessment and Repair of Hull Structure	
Part 1	**Cargo hold region**	**Example No.**
Area 4	**Tween deck structure**	**1**
Detail of damage	Sagging of deck panel/buckling of cantilever beam	

Sketch of damage

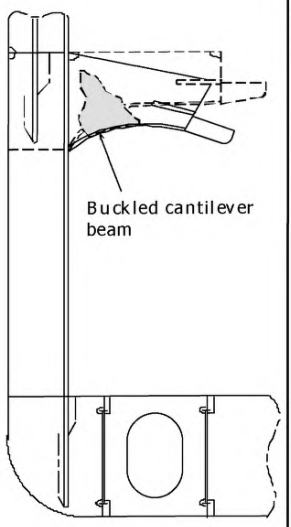

Sketch of repair

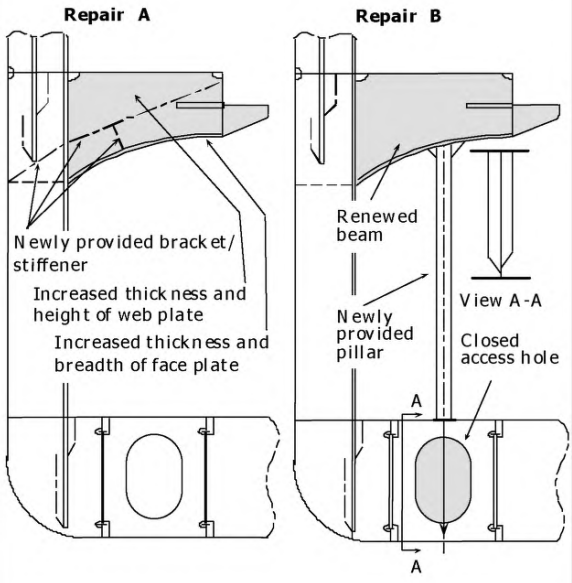

Notes on possible cause of damage

1. Poor design, overloading and/or excessive inertia force caused in heavy weather.

Notes on repairs

1. The affected structures are to be cropped and renewed.
2. **Repair A**:
   Reinforcement should be considered by increased scantlings of beam and/or additional stiffeners.
3. **Repair B**:
   Pillars may be provided for reinforcement subject to the approval of the owner. In such a case, reinforcement of the floor under the pillar should be considered. (In the above example, access hole was closed.)

Area 5 Double bottom structure

Contents

1 General

2 What to look for - Tank top inspection
2.1 Material wastage
2.2 Deformations
2.3 Fractures

3 What to look for - Double bottom tank inspection
3.1 Material wastage
3.2 Deformations
3.3 Fractures

4 What to look for - External bottom inspection
4.1 Material wastage
4.2 Deformations
4.3 Fractures

5 General comments on repair
5.1 Material wastage
5.2 Deformations
5.3 Fractures

Figures and/or Photographs - Area 5	
No.	Title
Photograph 1	Fractured inner bottom plating due to heavy corrosion on both sides
Photograph 2	Grooving corrosion of welding of bottom plating
Photograph 3	Section of the grooving shown in Photograph 2

Examples of structural detail failures and repairs - Area 5	
Example No.	Title
1	Fractures in inner bottom plating around container bottom pocket
2	Dented inner bottom plating and buckled/fractured floor under pillar
3-a	Fractures at the connection of bottom/inner bottom longitudinal to floor stiffener

Examples of structural detail failures and repairs - Area 5	
Example No.	**Title**
3-b	Fractures at the connection of bottom/inner bottom longitudinal to floor stiffener
4	Fractures and buckling in way of a cut-out for the passage of a longitudinal through a transverse primary member
5	Fractures in bottom shell plating/inner bottom plating at the corner of drain hole/air hole in longitudinal
6	Fracture in bottom shell plating along side girder and/or bottom longitudinal
7	Fracture in bottom plating below suction head
8	Fracture in shell plating at the termination of bilge keel

1 General

1.1 Double bottom structure is subjected to longitudinal hull girder bending, caused by cargo distribution and wave action. It is also subjected to longitudinal and transverse local bending due to the effects of cargo load from the inside in association with the counteracting forces from the outside. The double bottom structure is also subjected to the effects of cargo loading and unloading. The double bottom structure forward may also be subjected to increased dynamic forces due to slamming.

2 What to look for - Tank top inspection

2.1 Material wastage

2.1.1 The general condition with regard to corrosion of the tank top structure may be observed by visual inspection. The level of wastage of tank top plating may have to be established by means of thickness measurement. Special attention should be given to the intersection of the tank top with the side shell and transverse bulkheads where water may have accumulated and consequently accelerated the rate of corrosion.

2.1.2 When the tank top plating has been covered with dunnage or ceiling the plating may have suffered heavy corrosion, due to high humidity, and lack of proper maintenance (See **Photograph 1**).

2.1.3 The bilge wells should be cleaned and inspected closely since heavy pitting corrosion may have occurred due to accumulated water in the wells. Special attention should be paid to the plating in way of the bilge suction and sounding pipes.

2.1.4 Special attention should also be paid to areas where pipes penetrate the tank top.



Photograph 1
Fractured inner bottom plating due to heavy corrosion on both sides

2.2 Deformations

2.2.1 Buckling of the tank top plating may occur between longitudinals in areas subject to in-plane transverse compressive stresses or between floors in areas

subject to in-plane longitudinal compressive stresses.

2.2.2 Deformed structures may be observed in areas of the tank top due to overloading of cargo, impact of cargo during loading/unloading operations, or the use of mechanical unloading equipment.

2.2.3 Deformations may also occur at the heel of pillars fitted to support the tween deck structure (See **Example 2**).

2.2.4 Whenever deformations are observed on the tank top, further inspection in the double bottom tanks is imperative in order to determine the extent of the damage. The deformation may cause the breakdown of coating, if fitted, within the double bottom, which in turn may lead to accelerated corrosion rate in these unprotected areas.

2.3 Fractures

2.3.1 Fractures will normally be found by close-up inspection paying particular attention to the boundary connections of the tank top and to penetrations through the tank top (See **Example 1**).

2.3.2 Fractures that extend through the thickness of the plating or through the boundary welds may be observed during pressure testing of the double bottom tanks.

3 What to look for - Double bottom tank inspection

3.1 Material wastage

3.1.1 The level of wastage of double bottom internal structure (longitudinals, frames, floors, girders, etc.) may have to be established by means of thickness measurements. The combined effects of the marine environment, the carriage of seawater ballast, cyclical loading etc. may result in high corrosion rates.

3.1.2 If the protective coating is not properly maintained, structure in the ballast tank may suffer heavy corrosion. Upper part of the structure of double bottom tanks usually has more severe corrosion than the lower part.

3.1.3 Corrosion in the structure of ballast tanks near heated fuel tanks may be accelerated by the high temperature due to heated fuel oil. The rate of corrosion depends on several factors such as:

- Temperature and heat input to the ballast tank.
- Condition of original coating and its maintenance. (It is preferable for applying the protective coating of ballast tank at the building of the ship, and for subsequent maintenance, that the stiffeners on the boundaries of the fuel tank be fitted within the fuel tank instead of the ballast tank).
- Ballasting frequency and operations.
- Age of ship and associated stress levels as corrosion reduces the thickness of the structural elements and can result in fracturing and buckling.

3.1.4 Shell plating localized wear is caused by erosion and cavitation of the fluid flowing through the suction head. In addition, the suction head will be

positioned in the lowest part of the tank and water/mud will cover the area even when the tank is empty. The condition of the shell plating may be established by feeling by hand beneath the suction head. When in doubt, the lower part of the suction head should be removed and thickness measurements taken. If the vessel is docked, the thickness can be measured from below. If the distance between the suction head and the underlying shell plating is too small to permit access, the suction head should be dismantled. The shell plating below the sounding pipe should also be carefully examined. When a striking plate has not been fitted or is worn out, heavy corrosion can be caused by the striking of the weight of the sounding tape (See **Example 2** in **Part 3**).

3.2 Deformations

3.2.1 Deformations may occur due to the overloading of the cargo, dynamic forces due to slamming in the forward part of the vessel, or from the impact of cargo loading/unloading. Special attention should be paid to those areas of deformation identified during the tank top or external bottom inspections. Deformations in the structure not only reduce the strength of the structure but may also cause breakdown of the coating, leading to accelerated corrosion.

3.3 Fractures

3.3.1 Fractures may be caused by the cyclic deflection of the double bottom induced by repeated loading from the sea or due to poor "through-thickness" properties of the plating. Scallops in the bottom girders can create areas of stress concentrations which further increase the risk of fractures.

4 What to look for - External bottom inspection

4.1 Material wastage

4.1.1 Hull structure below the water line can usually be inspected only when the ship is dry-docked. Therefore, the structure should be inspected carefully, taking into account the period until the next scheduled dry-docking. The level of wastage of the bottom plating may have to be established by means of thickness measurements.

4.1.2 Severe grooving along welding of bottom plating is often found (See **Photographs 2** and **3**). This grooving can be accelerated by poor maintenance of the protective coating and/or sacrificial anodes fitted to the bottom plating.

4.1.3 Bottom or "docking" plugs should be carefully examined for excessive corrosion along the edge of the weld connecting the plug to the bottom plating.

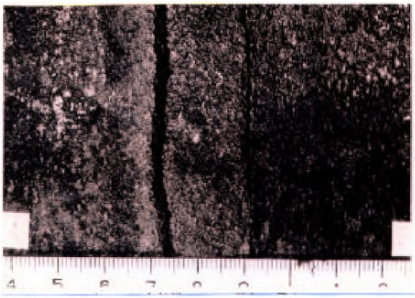

Photograph 2
Grooving corrosion of welding of bottom plating

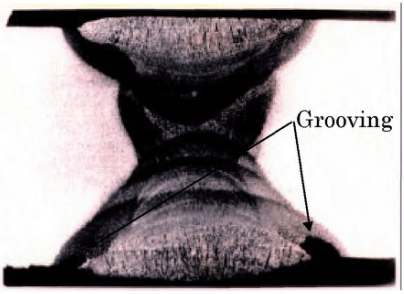

Photograph 3
Section of the grooving shown in Photograph 2

4.2 Deformations

4.2.1 Buckling of the bottom shell plating may occur between longitudinals or floors in areas subject to in-plane compressive stresses (either longitudinally or transversely). Deformations may also be attributed to slamming due to wave action in the forward part of the vessel, or contact with an underwater object. When deformation of the shell plating is found, the area should be inspected internally. Even if the deformation is small, the internal structure may have suffered serious damage.

4.3 Fractures

4.3.1 The bottom shell plating should be inspected when it has dried since fractures in shell plating may be easily detected if water comes out of the fracture in clear contrast to the dry shell plating. Therefore if the ship has been inspected while wet, it is recommended that the ship be inspected again when dry.

4.3.2 Fractures in butt welds and fillet welds (particularly at the wrap around at scallops and ends of bilge keels) are sometimes observed and may propagate into the bottom plating. The cause of the fractures in butt welds is usually a weld defect or grooving. If the bilge keels are divided at the block joints of hull, all ends of the bilge keels are to be inspected.

5 General comments on repair

5.1 Material wastage

5.1.1 In general, where the tank top, double bottom internal structure, and bottom shell plating have wasted to the allowable level, the normal practice is to crop and renew the affected area. Where possible, plate renewals should be for the full width of the plate but in no case should they be less than 450mm in width to avoid build up of residual stresses due to welding. Repair work in double bottom will require careful planning, accessibility, and gas freeing of fuel oil tanks. Doubler plates are not to be used for compensation of wasted plates.

5.1.2 Plating below suction heads and sounding pipes is to be replaced if the

average thickness is below the acceptable limit for replacement (See **Example 7**). When scattered deep pitting is found it may be repaired by welding.

5.2 Deformations

5.2.1 Extensive deformation should be corrected by replacement of the tank top and bottom shell plating, and the deformed portion of affected girders or floors. If there is no evidence that the deformation was caused by grounding or other excessive local loading, or that it is associated with excessive wastage, additional internal stiffening may need to be provided. In this regard, the Classification Society concerned should be contacted.

5.3 Fractures

5.3.1 Fractures of a minor nature may be veed-out and rewelded. Where cracking is more extensive, the structure is to be cropped and renewed.

5.3.2 For fractures caused by the cyclic deflection of the double bottom, reinforcement of the structure may be required in addition to cropping and renewal of the fractured part.

5.3.3 For fractures due to poor through thickness properties of the plating, cropping and renewal with steel having adequate through thickness properties is an acceptable solution.

5.3.4 Damaged bilge keels must be promptly repaired if there is distortion or fractures. Since the bilge keel is subjected to the same longitudinal stress level as the bilge plating, propagation of fractures into the shell could result in a serious failure. Fractured butt welds should be repaired using full penetration welds and proper welding procedures.

5.3.5 Ends of bilge keels require internal support. This should be taken into account when cropping a damaged part of a bilge keel (See **Example 8**).

GENERAL CARGO SHIPS	Guidelines for Surveys, Assessment and Repair of Hull Structure	
Part 1	**Cargo hold region**	**Example No.**
Area 5	**Double bottom structure**	**1**
Detail of damage	Fractures in inner bottom plating around container bottom pocket	

Sketch of damage

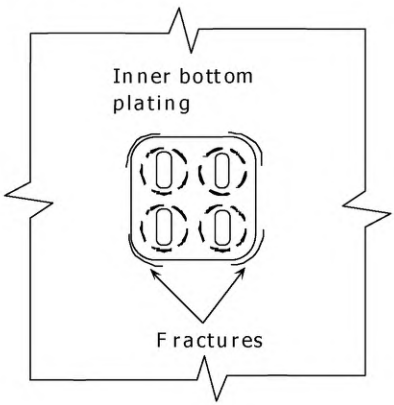

Sketch of repair

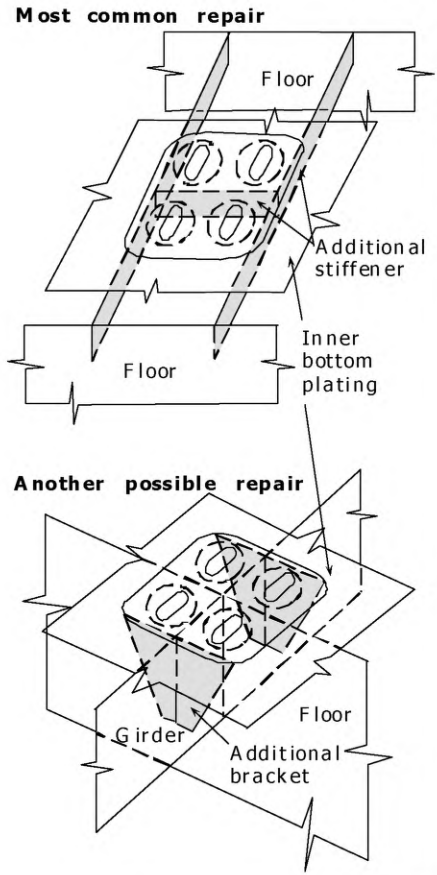

Notes on possible cause of damage

1. Pocket is not supported correctly by floor, longitudinal and/or stiffener.

Notes on repairs

1. Fractured plating should be cropped and part renewed.
2. Adequate reinforcement should be considered.

GENERAL CARGO SHIPS	Guidelines for Surveys, Assessment and Repair of Hull Structure	
Part 1	**Cargo hold region**	**Example No.**
Area 5	**Double bottom structure**	**2**
Detail of damage	Dented inner bottom plating and buckled/fractured floor under pillar	

Sketch of damage

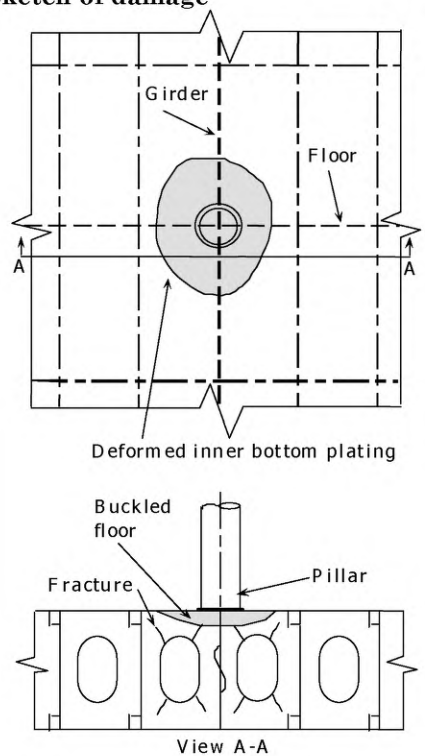

Sketch of repair

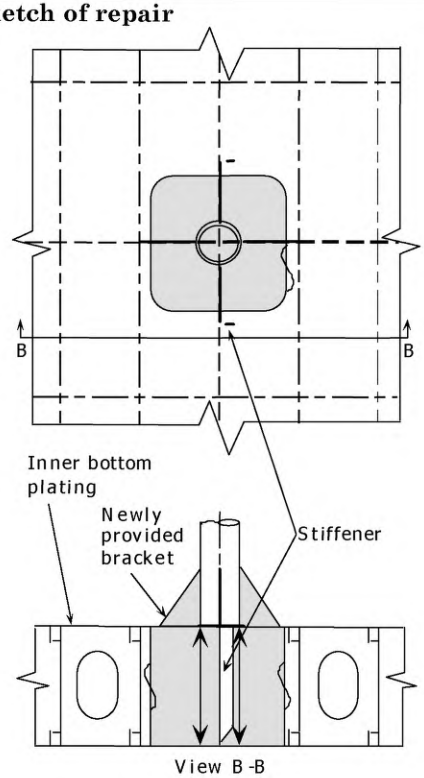

Notes on possible cause of damage

1. Inadequate arrangement and/or reinforcement of access holes.
2. Excessive deck-loading on tween deck.

Notes on repairs

1. Dented inner bottom plating is to be cropped and part renewed.
2. The fractured floor is to be cropped and part renewed.
3. Access holes should be closed by insert plates.
4. Stiffener on floor/girder and/or brackets should be considered. (Fitting of brackets in the hold is subject to the agreement of the owner.)

GENERAL CARGO SHIPS	Guidelines for Surveys, Assessment and Repair of Hull Structure	
Part 1	**Cargo hold region**	**Example No.**
Area 5	**Double bottom structure**	**3-a**
Detail of damage	Fractures at the connection of bottom/inner bottom longitudinal to floor stiffener	

Sketch of damage

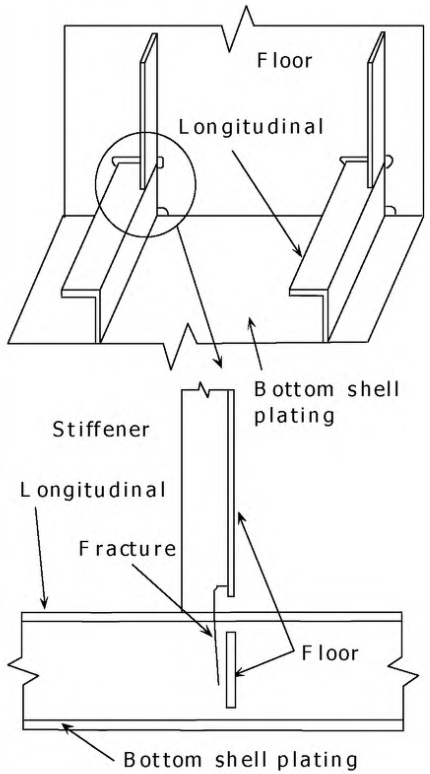

Note: same damage may occur at similar connection to inner bottom plating

Sketch of repair

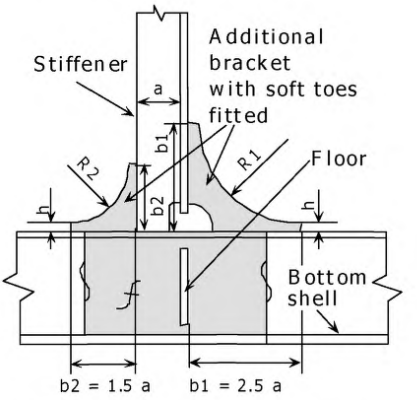

f: Where required, the longitudinal to be cropped and part renewed

1. For a slope at toes max. 1 : 3, R1 = (b1-h) x 1.6 and R2 = (b2-h) x 1.6
2. Soft toe bracket to be welded first to longitudinal
3. Scallop in bracket to be as small as possible, recommended max. 35 mm
4. If toes of brackets are ground smooth, full penetration welds in way to be provided
5. Maximum length to thickness ratio = 50 : 1 for unstiffened bracket edge
6. Toe height, h, to be as small as possible (10- 15 mm)

Notes on possible cause of damage

1. Damage can be caused by stress concentrations leading to accelerated fatigue in this region.

Notes on repairs

1. If fracture extends to over one third of the depth of the longitudinal, then crop and part renew. Otherwise the fracture can be veed-out and welded.

GENERAL CARGO SHIPS	Guidelines for Surveys, Assessment and Repair of Hull Structure	
Part 1	**Cargo hold region**	**Example No.**
Area 5	**Double bottom structure**	**3-b**
Detail of damage	Fractures at the connection of bottom/inner bottom longitudinal to floor stiffener	

Sketch of damage

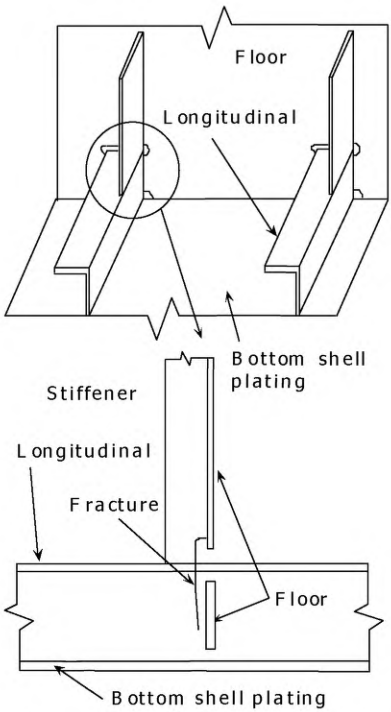

Note: same damage may occur at similar connection to inner bottom plating

Sketch of repair

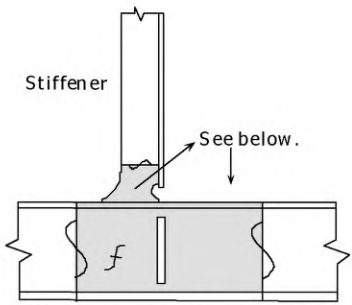

f: Where required, the longitudinal to be cropped and part renewed

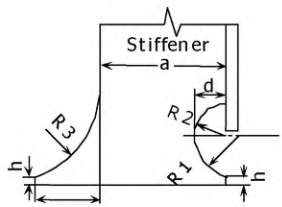

Various cut-out shapes have been developed. The following is one example.

1. Toe height as small as possible (h = 10 - 15 mm)
2. Depth "d" of key hole notch as small a possible, max. 30 mm
3. For a slope at toe max. 1 : 3
4. R1 = 1.5d, R2 = d and R3 = 1.5c

Notes on possible cause of damage

1. Damage can be caused by stress concentrations leading to accelerated fatigue in this region.

Notes on repairs

1. If fracture extends to over one third of the depth of the longitudinal, then crop and part renew. Otherwise the fracture can be veed-out and welded.

GENERAL CARGO SHIPS	Guidelines for Surveys, Assessment and Repair of Hull Structure	
Part 1	**Cargo hold region**	**Example No.**
Area 5	**Double bottom structure**	**4**
Detail of damage	Fractures and buckling in way of a cut-out for the passage of a longitudinal through a transverse primary member	

Sketch of damage

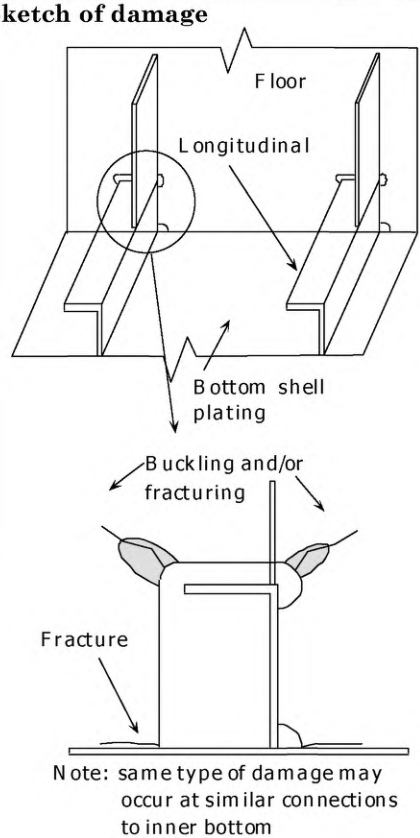

Note: same type of damage may occur at similar connections to inner bottom

Sketch of repair

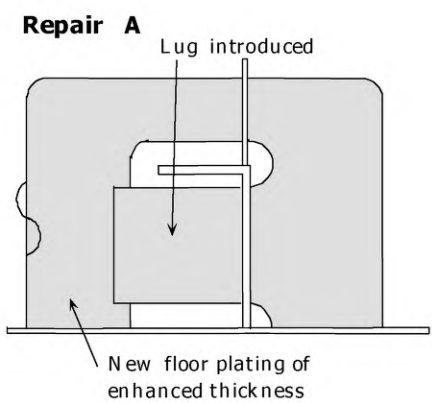

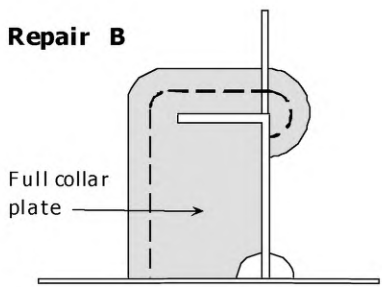

Notes on possible cause of damage

1. Damage can be caused by general levels of corrosion and presence of stress concentration associated with the presence of a cut-out.

Notes on repairs

1. If fractures are significant then crop and part renew the floor plating otherwise the fracture can be veed-out and welded provided the plating is not generally corroded.
2. **Repair B** is to be incorporated if the lug proves to be ineffective.

GENERAL CARGO SHIPS	Guidelines for Surveys, Assessment and Repair of Hull Structure	
Part 1	**Cargo hold region**	**Example No.**
Area 5	**Double bottom structure**	**5**
Detail of damage	Fractures in bottom shell plating/inner bottom plating at the corner drain hole/air hole in longitudinal	

Sketch of damage

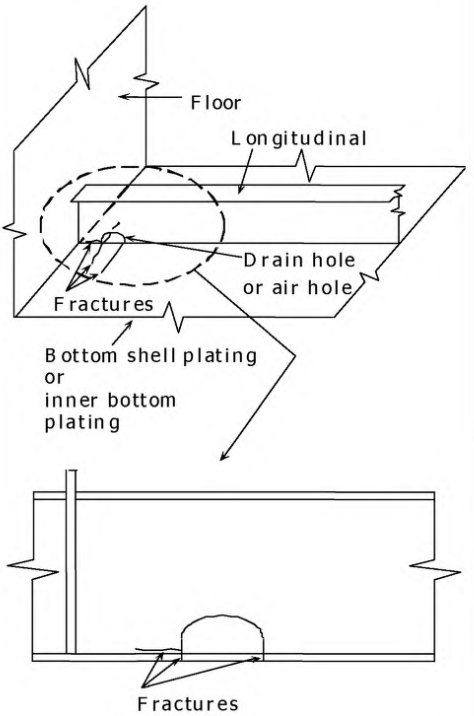

Sketch of repair

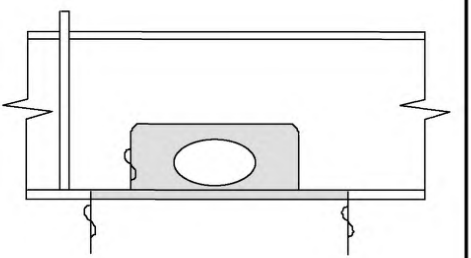

Notes on possible cause of damage

1. Stress concentration and/or corrosion due to stress concentration at the corner of drain hole/air hole.

Notes on repairs

1. Fractured plating should be cropped and part renewed.
2. If fatigue life is to be improved, change of drain hole/air hole shape is to be considered.

GENERAL CARGO SHIPS	Guidelines for Surveys, Assessment and Repair of Hull Structure	
Part 1	**Cargo hold region**	**Example No.**
Area 5	**Double bottom structure**	**6**
Detail of damage	Fracture in bottom shell plating along side girder and/or bottom longitudinal	

Sketch of damage

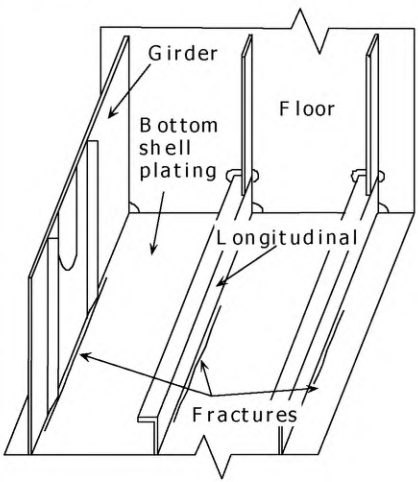

Sketch of repair

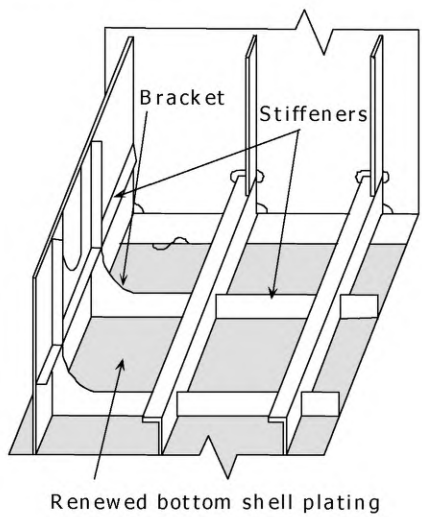

Notes on possible cause of damage

1. Vibration.

Notes on repairs

1. Fractured bottom shell plating should be cropped and renewed.
2. Natural frequency of the panel should be changed, e.g. reinforcement by additional stiffener/bracket.

GENERAL CARGO SHIPS	Guidelines for Surveys, Assessment and Repair of Hull Structure	
Part 1	**Cargo hold region**	**Example No.**
Area 5	**Double bottom structure**	**7**
Detail of damage	Corrosion in bottom plating below suction head	

Sketch of damage

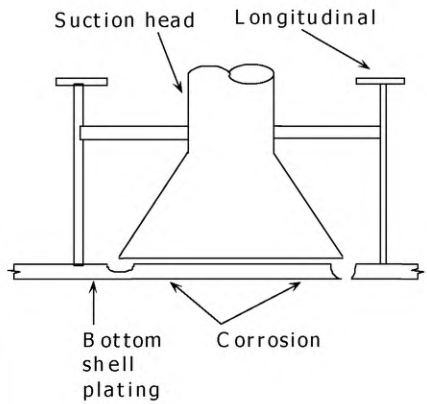

Sketch of repair

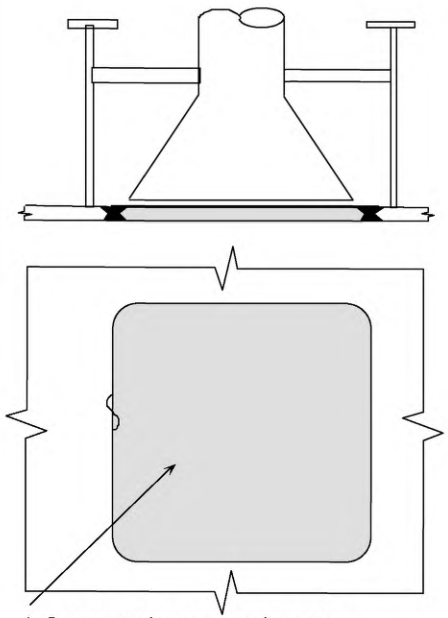

1. Insert to have round corners
2. Non-destructive examination to be applied after welding based on the Society's rules

Notes on possible cause of damage

1. High flow rate associated with insufficient corrosion prevention
2. system.
   Galvanic action between dissimilar metals

Notes on repairs

1. Affected plating should be cropped and part renewed. Thicker plate and suitable beveling should be considered.
2. If the corrosion is limited to a small area, i.e. pitting corrosion, repair by welding is acceptable.

GENERAL CARGO SHIPS	Guidelines for Surveys, Assessment and Repair of Hull Structure	
Part 1	**Cargo hold region**	**Example No.**
Area 5	**Double bottom structure**	**8**
Detail of damage	Fracture in shell plating at the termination of bilge keel	

Sketch of damage

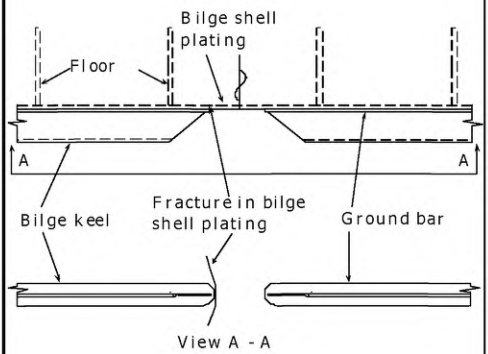

Sketch of repair

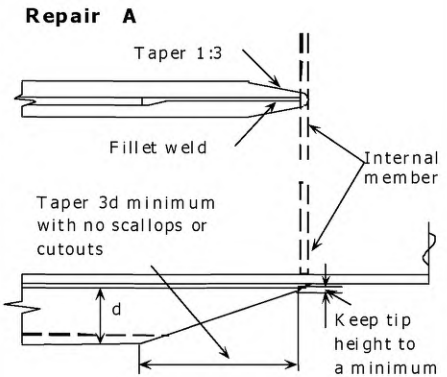

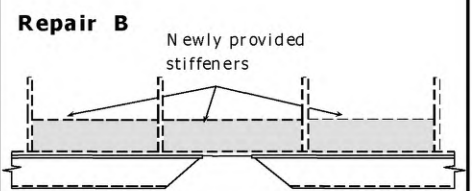

Notes on possible cause of damage

1. Poor design causing stress concentration.

Notes on repairs

1. Fractured plating is to be cropped and renewed.
2. Reduction of stress concentration of the bilge keel end should be considered.
   Repair A: Modification of the detail of end
   Repair B: New internal stiffeners
3. Instead of **Repair A** or **B** continuous ground bar and bilge keel should be considered.

Part 2 Fore and aft end regions

Contents

Area 1 - Fore end structure
Area 2 - Aft end structure
Area 3 - Stern frame, rudder arrangement and propeller shaft supports

---

Area 1 Fore End Structure

Contents

1 General

2 What to look for
2.1 Material wastage
2.2 Deformations
2.3 Fractures

3 General comments on repair
3.1 Material wastage
3.2 Deformations
3.3 Fractures

Figures and/or Photographs - Area 1	
No.	**Title**
Figure 1	Fore end structure - Potential problem areas

Examples of structural detail failures and repairs - Area 1	
Example No.	**Title**
1	Fracture and deformation of bow transverse web in way of cut-outs for side longitudinals
2	Fracture at toe of web frame bracket connection to stringer platform bracket
3	Fracture in side shell plating in way of chain locker
4	Deformation of forecastle deck
5	Deformation of side shell plating in way of forecastle space
6	Fracture in forecastle deck plating at bulwark

1 General

1.1 Due to the environmental conditions, wastage of the internal structure of the fore peak tank can be a major problem for many, and in particular ageing, general cargo ships. Corrosion may be accelerated in the cases of uncoated tanks or where the coating has not been maintained, and can lead to fractures of the internal structure, and the tank boundaries.

1.2 Deformation can be caused by contact which may result in damage to the internal structure and lead to fractures in the shell plating.

1.3 Fractures to the internal structure in the fore peak tank and spaces can also result from wave impact load due to slamming/panting.

1.4 Forecastle structure is exposed to severe environments and suffers damage, such as deformation of deck structure, deformation and fracture of bulwarks and collapse of masts, etc.

1.5 Shell plating around anchor and hawse pipe may have corrosion, deformation and possible fracture due to movement of improperly stowed anchor.

2 What to look for

2.1 Material wastage

2.1.1 Wastage (and possible subsequent fractures) is more likely to show initially in locations as indicated in **Figure 1**. A close-up inspection should be carried out. In addition, a representative selection of thickness measurements should be taken with particular attention being given to locations such as chain lockers.

2.1.2 Structure in chain lockers is liable to have heavy corrosion because of mechanical damage to the protective coating by anchor chains. In some ships, e.g. relatively small ships, side shell plating may form boundaries of the chain lockers. Consequently, heavy corrosion may result in a hole in the side shell plating.

2.2 Deformations

2.2.1 Contact with quaysides, etc. can result in large deformations and fractures of the internal structure. This may affect the watertight integrity of the tank boundaries and collision bulkhead. A close-up examination of the damaged area should be carried out.

2.3 Fractures

2.3.1 Fractures in the fore peak tank are normally found by close-up inspection of the internal structure.

2.3.2 Fractures that extend through the thickness of the plating or through the boundary welds may be observed during pressure testing of the double bottom tanks.

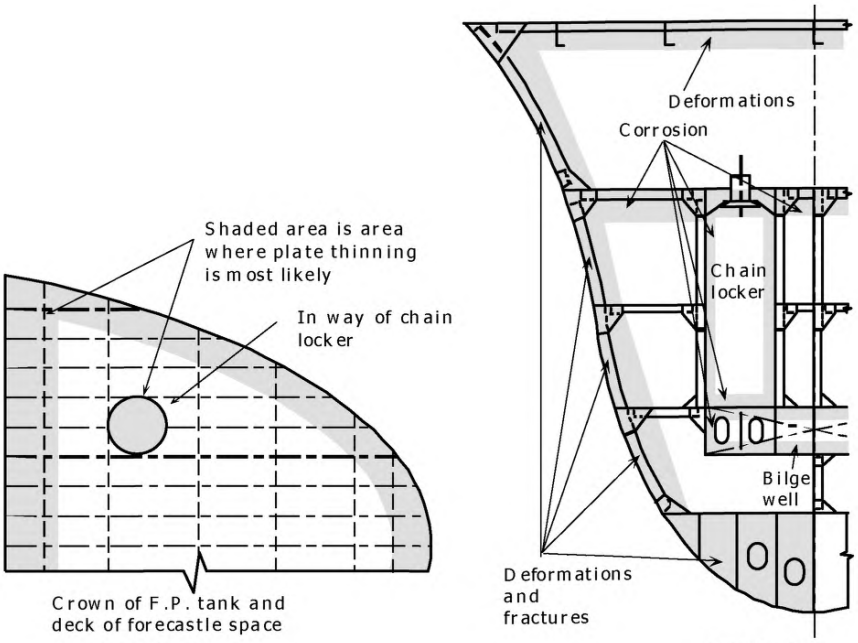

Figure 1 Fore end structure - Potential problem areas

3 General comments on repair

3.1 Material wastage

3.1.1 The necessary extent of steel renewal can be established when comparing the measured thickness to the original values, or the minimum acceptable values for this part of the structure. The repair work in the tank will require planning, to permit accessibility.

3.2 Deformations

3.2.1 Deformed structure caused by contact should be cropped and part renewed or faired in place depending on the nature and extent of damage.

3.3 Fractures

3.3.1 In the case of fractures caused by sea-loads the structure should be cropped and renewed. Increased thickness of plating and/or design modification to reduce stress concentrations should be considered (See **Examples 1**, **2** and **6**).

GENERAL CARGO SHIPS	Guidelines for Surveys, Assessment and Repair of Hull Structure	
Part 2	**Fore and aft end regions**	**Example No.**
Area 1	**Fore end structure**	**1**
Detail of damage	Fracture and deformation of bow transverse web in way of cut-outs for side longitudinals	

Sketch of damage

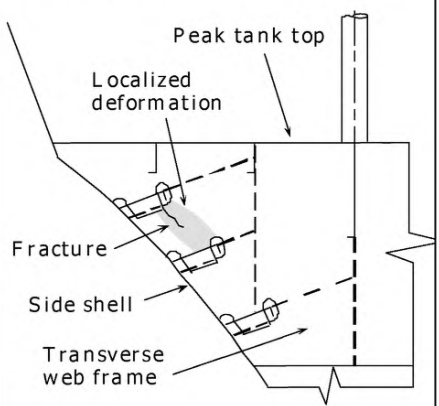

Sketch of repair

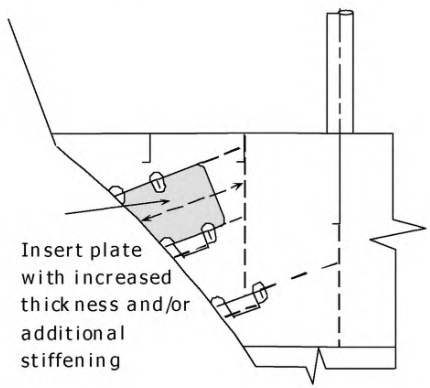

Notes on possible cause of damage

1. Localized material wastage in way of coating failure at cut-outs and sharp edges due to working of the structure.
2. Dynamic seaway loading in way of bow flare.

Notes on repairs

1. Sufficient panel strength to be provided to absorb the dynamic loads enhanced by bow flare shape.

GENERAL CARGO SHIPS	Guidelines for Surveys, Assessment and Repair of Hull Structure	
Part 2	**Fore and aft end regions**	**Example No.**
Area 1	**Fore end structure**	**2**
Detail of damage	Fracture at toe of web frame bracket connection to stringer platform bracket	

Sketch of damage

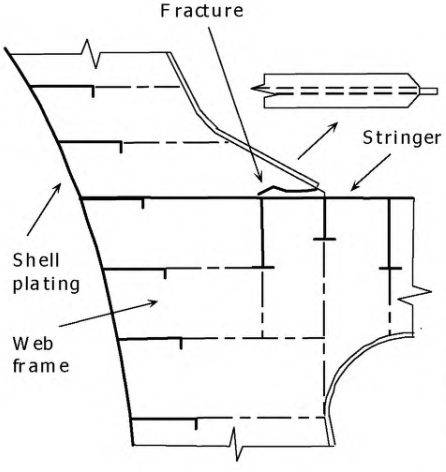

Sketch of repair

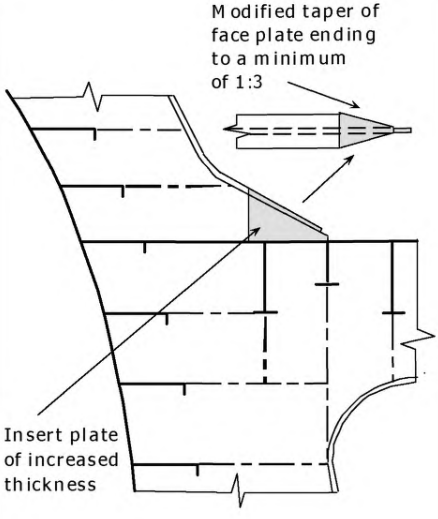

Notes on possible cause of damage

1. Inadequate bracket forming the web frame connection to the stringer.
2. Localized material wastage in way of coating failure at bracket due to flexing of the structure.
3. Dynamic seaway loading in way of bow flare.

Notes on repairs

1. Adequate soft nose bracket endings with a face plate taper of at least 1 : 3 to be provided.

GENERAL CARGO SHIPS	Guidelines for Surveys, Assessment and Repair of Hull Structure	
Part 2	**Fore and aft end regions**	**Example No.**
Area 1	**Fore end structure**	**3**
Detail of damage	Fracture in side shell plating in way of chain locker	

Sketch of damage

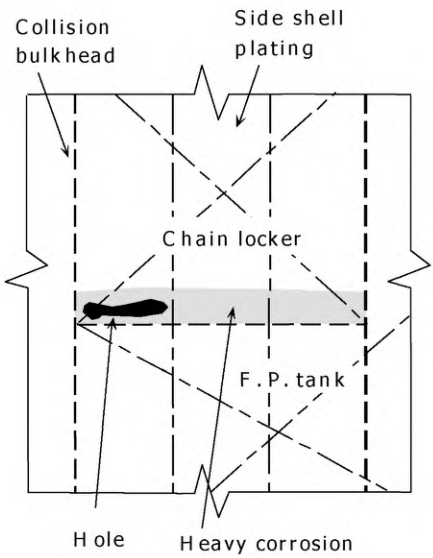

Sketch of repair

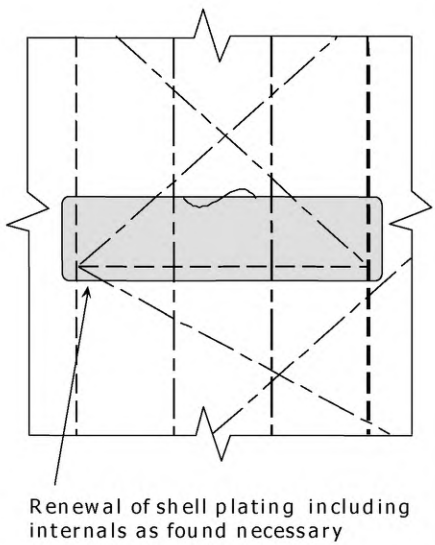

Notes on possible cause of damage

1. Heavy corrosion in region where mud is accumulated.

Notes on repairs

1. Corroded plating should be cropped and renewed.
2. Protective coating should be applied.

GENERAL CARGO SHIPS	Guidelines for Surveys, Assessment and Repair of Hull Structure	
Part 2	**Fore and aft end regions**	**Example No.**
Area 1	**Fore end structure**	**4**
Detail of damage	Deformation of forecastle deck	

Sketch of damage

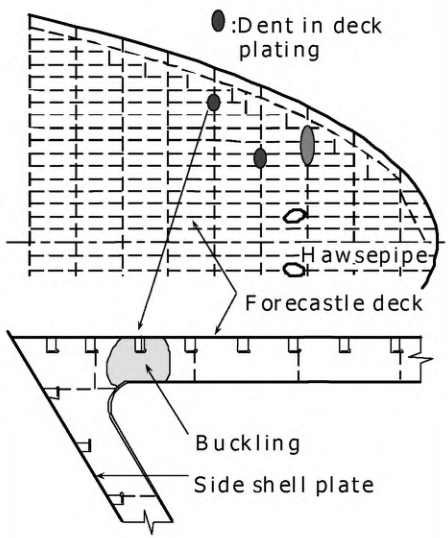

Sketch of repair

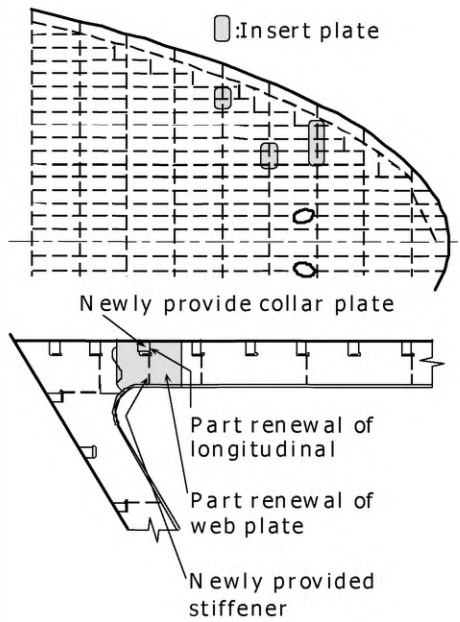

Notes on possible cause of damage

1. Green sea on deck.
2. Insufficient strength.

Notes on repairs

1. Deformed structure should be cropped and renewed.
2. Additional stiffeners on web of beam should be considered for reinforcement.

GENERAL CARGO SHIPS	Guidelines for Surveys, Assessment and Repair of Hull Structure	
Part 2	**Fore and aft end regions**	**Example No.**
Area 1	**Fore end structure**	**5**
Detail of damage	Deformation of side shell plating in way of forecastle space	

Sketch of damage

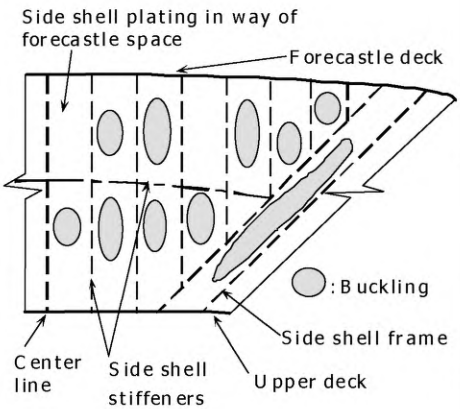

Sketch of repair

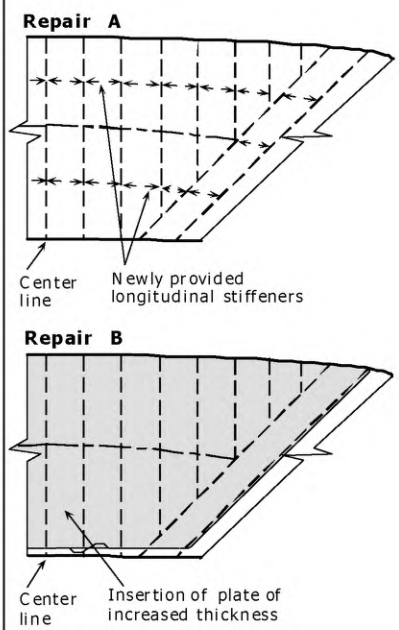

Notes on possible cause of damage

1. Heavy weather.
2. Insufficient strength.

Notes on repairs

1. Deformed part should be cropped and part renewed.
2. **Repair A**
   Additional stiffeners between existing stiffeners should be considered.
   Repair B
   Insertion of plate of increased thickness with additional stiffeners

GENERAL CARGO SHIPS	Guidelines for Surveys, Assessment and Repair of Hull Structure	
Part 2	**Fore and aft end regions**	**Example No.**
Area 1	**Fore end structure**	**6**
Detail of damage	Fracture in forecastle deck plating at bulwark	

Sketch of damage

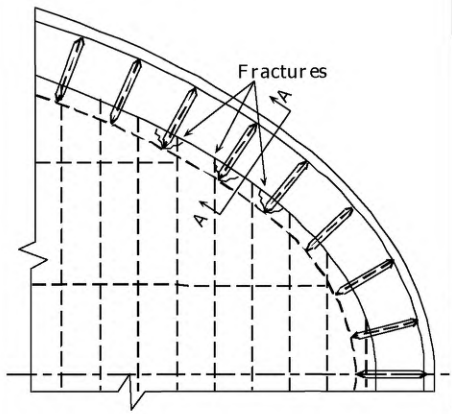

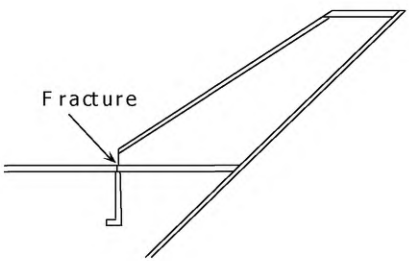

View A-A

Sketch of repair

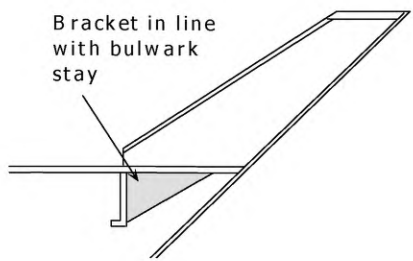

View A-A

Notes on possible cause of damage

1. Bow flare effect in heavy weather.
2. Stress concentration due to poor design.

Notes on repairs

1. Fractured deck plating should be cropped and renewed.
2. Bracket in line with the bulwark stay to be fitted to reduce stress concentration.

Area 2 Aft end structure

Contents

1 General

2 What to look for
2.1 Material wastage
2.2 Deformations
2.3 Fractures

3 General comments on repair
3.1 Material wastage
3.2 Deformations
3.3 Fractures

Figures and/or Photographs - Area 2	
No.	Title
Figure 1	Aft end structure - Potential problem areas

Examples of structural detail failures and repairs - Area 2	
Example No.	Title
1	Fractures in longitudinal bulkhead in way of rudder trunk
2	Fractures at the connection of floors and girder/side brackets
3-a	Fractures in flat where rudder carrier is installed in steering gear room
3-b	Fractures in steering gear foundation brackets and deformed deck plate

1 General

1.1 Due to environmental conditions, wastage of the internal structure of the aft peak tanks can be a major problem for many, and in particular ageing, general cargo ships. Wastage may be found to be accelerated in the case of uncoated tanks or where the coating has not been maintained, and can lead to fractures of the internal structure, and the tanks boundaries.

1.2 Deformation can be caused by contact or due to wave impact from astern which can result in damage to the internal structure and lead to fractures in the shell plating.

1.3 Fractures to the internal structure in the aft peak tank and spaces can also result from main engine and propeller excited vibration.

2 What to look for

2.1 Material wastage

2.1.1 Wastage (and possible subsequent fractures) is more likely to show initially in locations as indicated in **Figure 1**. A close-up inspection should be carried out. In addition, a representative selection of thickness measurements should be taken with particular attention being given to locations such as bunker tank boundaries and spaces adjacent to heated engine rooms.

2.2 Deformations

2.2.1 Contact with quaysides etc. can result in large deformations and fractures of the internal structure. This may affect the watertight integrity of the tank boundaries and bulkheads. A close-up examination of the damaged area should be carried out.

2.3 Fractures

2.3.1 Fractures in floor connection welds and in other locations in the aft peak tanks and rudder trunk spaces are normally found by close-up inspection.

2.3.2 The structure supporting the rudder carrier may fracture and/or deform due to the rudder having suffered excessive loads. Bolts connecting the rudder carrier to the steering gear flat may also be damaged due to such loads.

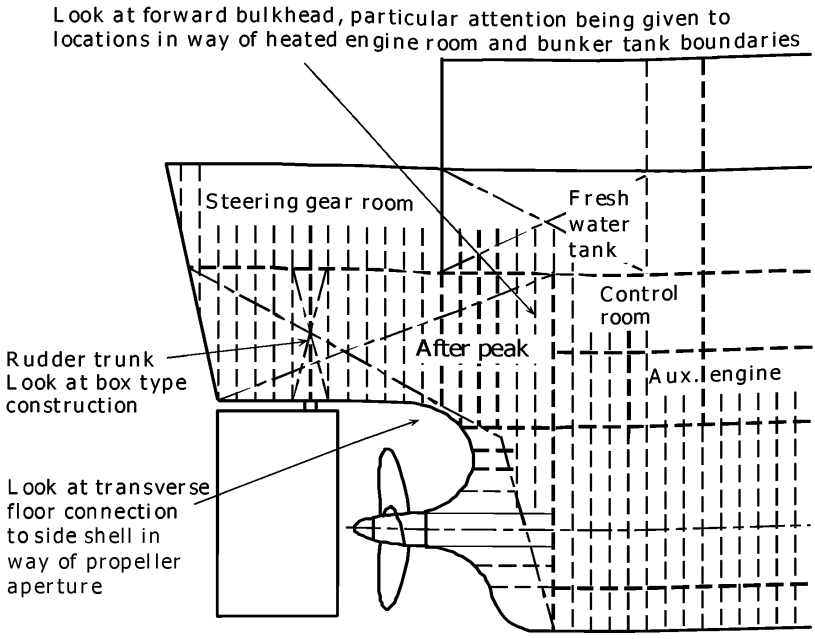

Figure 1 Aft end structure - Potential problem areas

3 General comments on repair

3.1 Material wastage

3.1.1 The necessary extent of steel renewal can be established when comparing the measured thickness to the original values, or the minimum acceptable values for this part of the structure. The repair work in the peak tanks will require planning to permit accessibility.

3.2 Deformations

3.2.1 Deformed structure caused by contact should be cropped and part renewed or faired in place depending on the extent of damage.

3.3 Fractures

3.3.1 Repairs of main engines and propeller excited vibration damage should be made by returning the structure to its original condition. In order to prevent recurrence of the damage the cause of the vibration should be ascertained and additional reinforcements provided as found necessary (See **Examples 1** and **2**).

3.3.2 Fractured structure which supports the rudder carrier is to be cropped and renewed, and may have to be reinforced (See **Example 3**).

GENERAL CARGO SHIPS	Guidelines for Surveys, Assessment and Repair of Hull Structure	
Part 2	**Fore and aft end regions**	**Example No.**
Area 2	**Aft end structure**	**1**
Detail of damage	Fractures in bulkhead in way of rudder trunk	

Sketch of damage

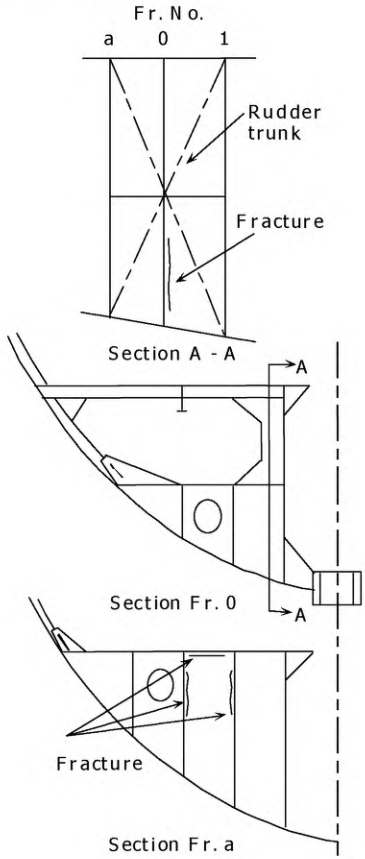

Sketch of repair

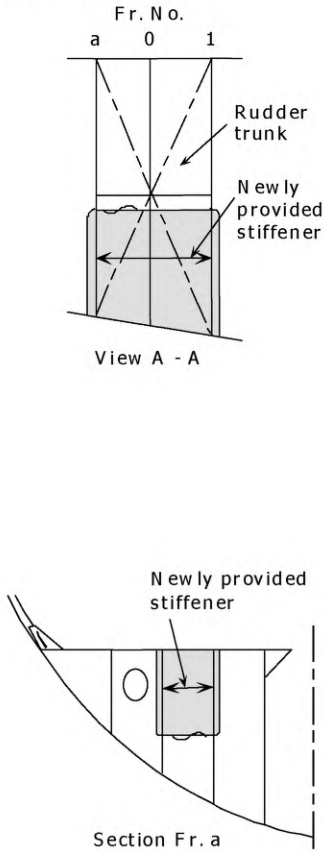

Notes on possible cause of damage

1. Vibration.

Notes on repairs

1. The fractured plating should be cropped and renewed.
2. Natural frequency of the plate between stiffeners should be changed, e.g. reinforcement by additional stiffeners.

GENERAL CARGO SHIPS	Guidelines for Surveys, Assessment and Repair of Hull Structure	
Part 2	**Fore and aft end regions**	**Example No.**
Area 2	**Aft end structure**	**2**
Detail of damage	Fractures at the connection of floors and girders/side brackets	

Sketch of damage

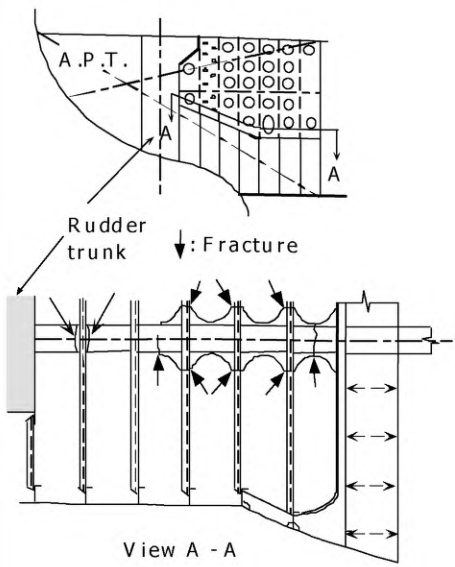

Sketch of repair

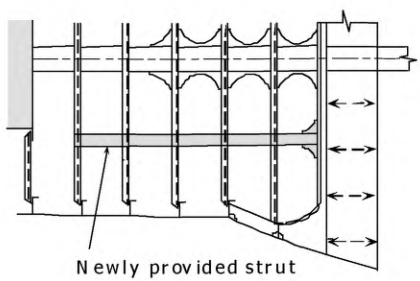

Notes on possible cause of damage

1. Vibration.

Notes on repairs

1. The fractured plating should be cropped and renewed.
2. Natural frequency of the panel should be changed, e.g. reinforcement by additional strut.

GENERAL CARGO SHIPS	Guidelines for Surveys, Assessment and Repair of Hull Structure	
Part 2	**Fore and aft end regions**	**Example No.**
Area 2	**Aft end structure**	**3-a**
Detail of damage	Fracture in flat where rudder carrier is installed in steering gear room	

Sketch of damage

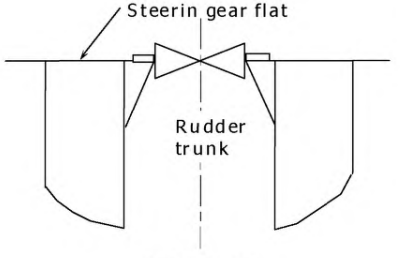

View A - A

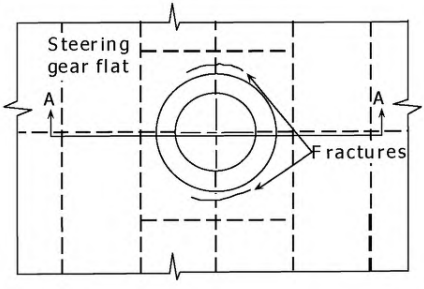

Sketch of repair

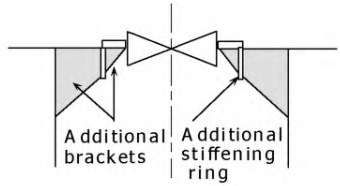

View B - B

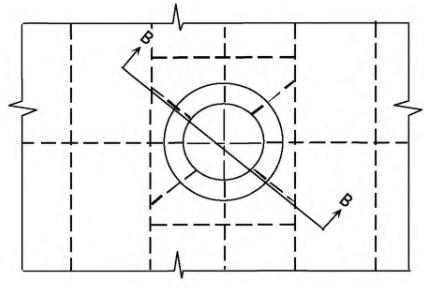

Notes on possible cause of damage

1. Inadequate design.

Notes on repairs

1. Fractured plating should be cropped and renewed.
2. Additional brackets and stiffening ring should be fitted for reinforcement.

GENERAL CARGO SHIPS	Guidelines for Surveys, Assessment and Repair of Hull Structure	
Part 2	**Fore and aft end regions**	**Example No.**
Area 2	**Aft end structure**	**3-b**
Detail of damage	Fractures in steering gear foundation brackets and deformed deck plate	

Sketch of damage

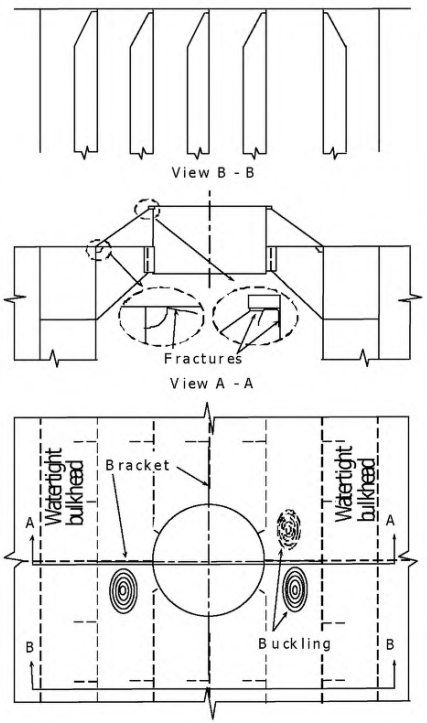

Sketch of repair

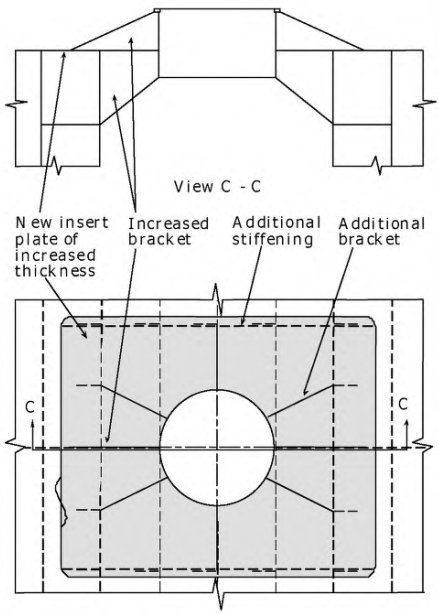

Notes on possible cause of damage

1. Insufficient deck strengthening (missing base plate).
2. Insufficient strengthening of steering gear foundation.
3. Bolts of steering gear were not sufficiently pre-loaded.

Notes on repairs

1. New insert base plate of increased plate thickness.
2. Additional longitudinal stiffening at base plate edges.
3. Additional foundation brackets above and under deck (star configuration).

Area 3 Stern frame, rudder arrangement and propeller shaft support

Contents

1 General

2 What to look for - Drydock inspection
2.1 Deformation
2.2 Fractures
2.3 Corrosion/Erosion/Abrasion

3 General comments on repair
3.1 Rudder
3.2 Repair of plate structures
3.3 Abrasion of bush and sleeve
3.4 Assembling of rudders
3.5 Repair of propeller boss and stern tube

Figures and/or Photographs - Area 3	
No.	Title
Figure 1	Nomenclature for stern frame, rudder arrangement and propeller shaft support
Figure 2	Potential problem areas
Photograph 1	Fractured rudder due to corrosion in rudder plating
Figure 3	Rudder stock repair by welding
Diagram 1	Preheating temperature

Examples of structural detail failures and repairs - Area 3	
Example No.	Title
1	Fracture in rudder plate
2	Fracture in connection of palm plate to rudder blade
3	Fracture in rudder plating of semi-spade rudder (short fracture with end located forward of the vertical web)
4	Fracture in rudder plating of semi-spade rudder extending beyond the vertical web

Examples of structural detail failures and repairs - Area 3	
Example No.	**Title**
5	Fracture in rudder plating of semi-spade rudder in way of pintle cut-out
6	Fracture in side shell plating at the connection to propeller boss
7	Fracture in stern tube at the connection to stern frame

1 General

1.1 The stern frame, possible strut bearing arrangement and connecting structures are exposed to propeller induced vibrations, which may lead to fatigue cracking in areas where stress concentrations occur.

1.2 The rudder and rudder horn are exposed to an accelerated and fluctuating stream from the propeller, which may also lead to fatigue cracking in areas where stress concentrations occur.

1.3 In extreme weather conditions the rudder may suffer wave slamming forces causing deformations of the rudder stock and the rudder horn as well as of the rudder itself.

1.4 The rudder and the rudder horn as well as struts (on shafting arrangement with strut bearings) may also come in contacts with floating object such as timber-logs or ice, causing damages similar to those described in **1.3**.

1.5 Since different materials are used in adjacent compartments and structures, accelerated (galvanic) corrosion may occur if protective coating and/or sacrificial anodes are not maintained properly.

1.6 Pre-existing manufacturing internal defects in cast pieces may lead to fatigue cracking.

1.7 A summary of potential problem areas is shown in **Figure 2**.

1.8 A complete survey of the rudder arrangement is only possible in dry dock. However, in some cases a survey including a damage survey can be carried out afloat by divers or with a trimmed ship. (Moved from **2.4**)

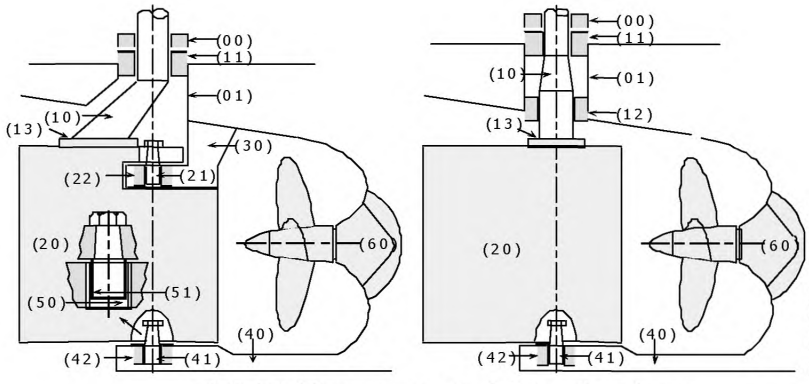

(a) Rudders supported by sole piece

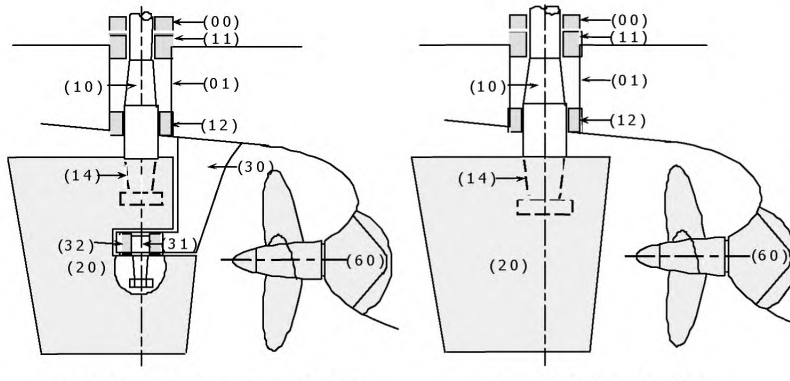

(b) Semi-spade rudder (or Mariner rudder)

(c) Spade rudder

Nomenclature

(00) Rudder carrier
(01) Rudder trunk
(10) Rudder stock
(11) Carrier bearing
(12) Neck bearing
(13) Horizontal coupling (Flange coupling)
(14) Cone coupling
(20) Rudder blade
(21) Upper pintle
(22) Upper pintle bearing
(30) Rudder horn
(31) Horn pintle
(32) Horn pintle bearing
(40) Sole piece
(41) Bottom pintle
(42) Bottom pintle bearing
(50) Bush
(51) Sleeve (Liner)
(60) Propeller boss (Stern tube casting)
(70) Propeller shaft bracket (Tail shaft strut)

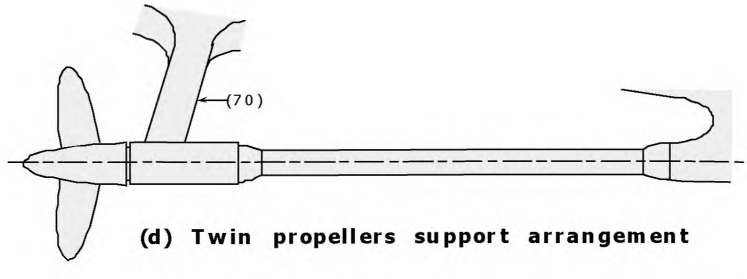

(d) Twin propellers support arrangement

Figure 1 Nomenclature for stern frame, rudder arrangement and propeller shaft support

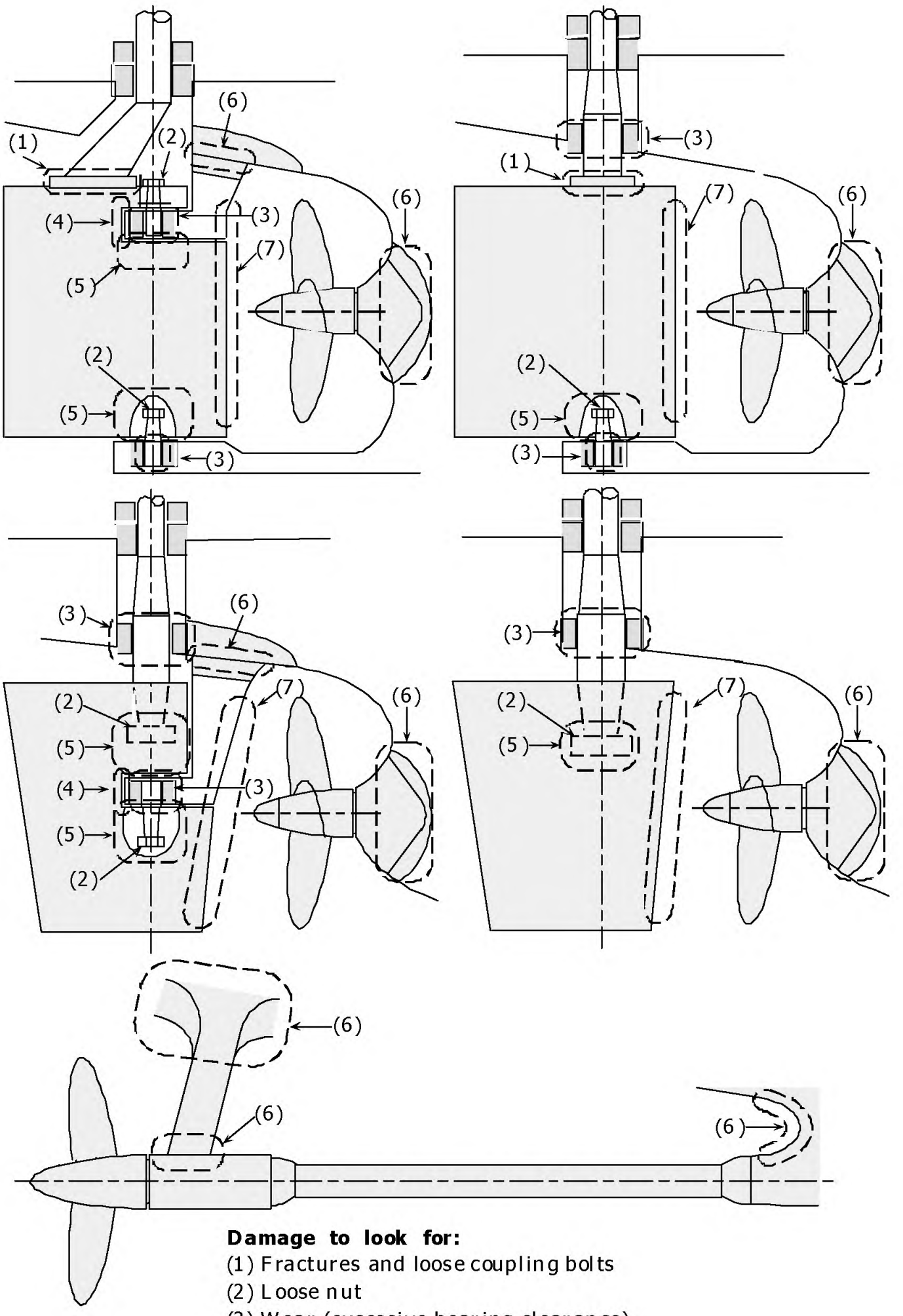

Damage to look for:

(1) Fractures and loose coupling bolts
(2) Loose nut
(3) Wear (excessive bearing clearance)
(4) Fractures in way of pintle cutout
(5) Fractures in way of removable access plate
(6) Fractures
(7) Erosion

Figure 2 Potential problem areas

2 What to look for - Drydock inspection

2.1 Deformations

2.1.1 The rudder blade, rudder stock, rudder horn and propeller boss/brackets have to be checked for deformations.

2.1.2 Indications of deformation of rudder stock/rudder horn could be found by excessive clearance.

2.1.3 Possible twisting deformation or slipping of cone connection can be observed by the difference in angle between rudder and tiller.

2.1.4 If bending or twisting deformation is found, the rudder has to be dismounted for further inspection.

2.2 Fractures

2.2.1 Fractures in rudder plating should be looked for at slot welds, welds of removable part to the rudder blade, and welds of the access plate in case of vertical cone coupling between rudder blade and rudder stock and/or pintle. Such welds may have latent defects due to the limited applicable welding procedure. Serious fractures in rudder plating may cause loss of rudder.

2.2.2 Fractures should be looked for at weld connection between rudder horn, propeller boss and propeller shaft brackets, and stern frame.

2.2.3 Fractures should be looked for at the upper and lower corners in way of the pintle recess in case of semi-spade rudders. Typical fractures are shown in **Examples 3** to **5**.

2.2.4 Fractures should be looked for at the transition radius between rudder stock and horizontal coupling (palm) plate, and the connection between horizontal coupling plate and rudder blade in case of horizontal coupling. Typical fractures are shown in **Examples 1** and **2**. Fatigue fractures should be looked for at the palm plate itself in case of loosened or lost coupling bolts.

2.2.5 Fractures should be looked for in the rudder plating in way of the internal stiffening structures since (resonant) vibrations of the plating may have occurred.

2.2.6 If the rudder stock is deformed, fractures should be looked for in rudder stock by nondestructive examinations before commencing repair measures, in particular in and around the keyway, if any.

2.3 Corrosion/Erosion/Abrasion

2.3.1 Rudder plating

Corrosion/erosion (such as deep pitting corrosion) should be looked for in rudder/rudder horn, especially in welds. In extreme cases the corrosion /erosion may cause a large fracture as shown in **Photograph 1**.



Photograph 1
Fractured rudder due to corrosion in rudder plating

2.3.2 Rudder stock and pintle

The following should be looked for on the rudder stock and pintle:

- Excessive clearance between sleeve and bush of the rudder stock/pintle beyond the allowable limit specified by the Classification Society.
- Condition of sleeve. If the sleeve is loose, ingress of water may have caused corrosion.
- Deep pitting corrosion in the rudder stock and pintle adjacent to the stainless steel sleeve.
- Slipping of rudder stock cone coupling. For a vertical cone coupling with hydraulic pressure connection, sliding of the rudder stock cone in the cast piece may cause severe surface damages.
- Where a stainless steel liner/sleeve/cladding for the pintle/rudder stock is fitted into a stainless steel bush, an additional check should be made for crevice corrosion.

3 General comments on repair

3.1 Rudder

3.1.1 Rudder stock with deformation

(a) If the rudder stock is twisted due to excessive forces such as contact or grounding and has no additional damages (fractures etc.) or other significant deformation, the stock usually can be used. The need for repair or heat treatment of the stock will depend on the amount of twist in the stock according to the requirements of the Classification Society. The keyway, if any, has to be milled in a new position.

(b) Rudder stocks with bending deformations, not having any fractures, may be repaired depending on the size of the deformation either by warm or by cold straightening in an approved workshop according to a procedure approved by the Classification Society. In the case of warm straightening, as a guideline, the temperature should usually not exceed the heat treatment temperature of 530-580 .

(c) In the case of fractures on a rudder stock with deformations, the stock may be used again depending on the nature and extent of the fractures. If a welding repair is considered acceptable, the fractures are to be

removed by machining/grinding and the welding is to be based on an approved welding procedure together with post weld heat treatment as required by the Classification Society.

3.1.2 Repair of rudder stocks/pintles by weld cladding

Rudder stocks and/or pintles may be repaired by welding replacing wasted material by similar weld material. After removal of the wasted area (corrosion, scratches, etc.) by machining and/or grinding the build-up welding has to be carried out by an automatic spiral welding according to an approved welding procedure. The welding has to be extended over the area of large bending moments (rudder stocks). In special cases post weld heat treatment has to be carried out according to the requirements of the Classification Society. After final machining, a sufficient number of layers of welding material have to remain on the rudder stock/pintle. A summary of the most important steps and conditions of this repair is shown in the **Figure 3**.

In the case of rudder stocks with bending loads, fatigue fractures in way of the transition radius between the rudder stock and the horizontal coupling plate cannot be repaired by local welding. A new rudder stock with a modified transition geometry has to be manufactured, as a rule (See **Example 1**). In exceptional cases a welding repair can be carried out based on an approved welding procedure. Measures have to be taken to avoid a coincidence of the metallurgical notch of the heat affected zone with the stress concentration in the radius' area. Additional surveys of the repair (including non-destructive fracture examination) have to be carried out at reduced intervals.

Replacing wasted material by similar ordinary weld material

- Removal of the wasted area by machining and/or grinding, non-destructive examination for fractures (magnetic particle inspection preferred)
- Build-up welding by automatic spiral welding (turning device) according to an approved welding procedure (weld process, preheating, welding consumables, etc.)
- Extension of build-up welding over the area of **large bending moments (shafts)** according to the sketch

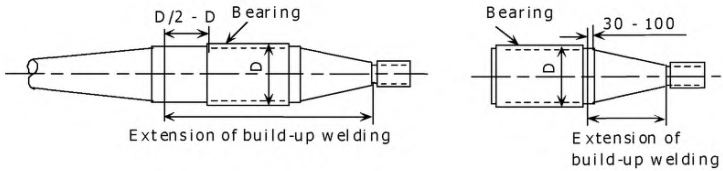

Rudder stock **Pintle**

- Sufficient number of weld layers to compensate removed material, at least one layer in excess (heat treatment of the remaining layer)
- Transition at the end of the build-up welding according to the following sketch

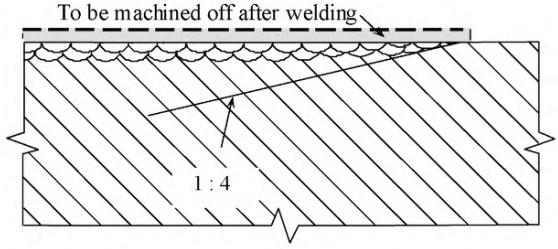

- Post weld heat treatment if required in special cases (never for stainless steel cladding on ordinary steel)
- Final machining, at least two layers of welding material have to remain on the rudder stock (See the above sketch)
- Non-destructive fracture examination

Figure 3 Rudder stock repair by welding

3.2 Repair of plate structures

3.2.1 Fatigue fractures in welding seams (butt welds) caused by welding failures (lack of fusion) can be gouged out and rewelded with proper root penetration.

3.2.2 In case of fractures, probably caused by (resonant) vibration, vibration analysis of the rudder plating has to be performed, and design modifications have to be carried out in order to change the natural frequency of the plate field.

3.2.3 Short fatigue fractures starting in the lower and/or upper corners of the pintle recess of semi-spade rudders that do not propagate into vertical or horizontal stiffening structures may be repaired by gouging out and welding. This procedure according to **Example 3** should be preferred.

In case of longer fatigue fractures starting in the lower and/or upper corners of the pintle recess of semi-spade rudders that propagate over a longer distance into the plating, thorough check of the internal structures has to be carried out. The fractured parts of the plating and internal structures, if necessary, have to be replaced by insert plates. A proper welding connection between the insert plate and the internal stiffening structure is very important (See **Examples 4** and **5**).

The area of the pintle recess corners has to be ground smooth after the repair. In many cases a modification of the radius, an increased thickness of plating and an enhanced steel quality may be necessary.

3.2.4 For the fractures at the connection between plating and cast pieces adequate pre-heating is necessary. The pre-heating temperature is to be determined taking into account the following parameters:

- chemical composition (carbon equivalent C_{eq})
- thickness of the structure
- hydrogen content in the welding consumables
- heat input

3.2.5 As a guide, the preheating temperature can be obtained from **Diagram 1** using the plate thickness and carbon equivalent of the thicker structure.

3.2.6 All welding repairs are to be carried out using qualified/approved welding procedures.

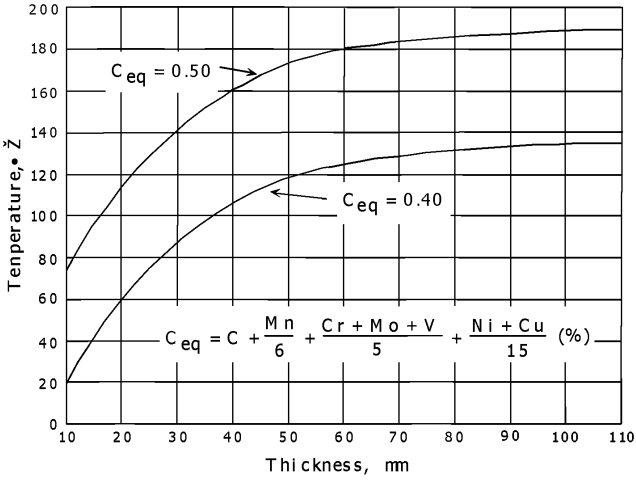

Diagram 1 Preheating temperature

3.3 Abrasion of bush and sleeve

Abrasion rate depends on the features of the ship such as frequency of maneuvering. However, if excessive clearance is found within a short period, e.g. 5 years, alignment of the rudder arrangement and the matching of the materials for sleeve and bush should be examined together with the replacement of the bush.

3.4 Assembling of rudders

After mounting of all parts of the rudder, nuts of rudder stocks with vertical cone coupling and nuts of pintles are to be effectively secured either against each other or both against the coupling plate.

3.5 Repair of propeller boss and stern tube

Repair examples for propeller boss and stern tube are shown in **Examples 6**and **7.** Regarding the welding reference is made to **3.1.2**, **3.2.4** and **3.2.5**.

GENERAL CARGO SHIPS	Guidelines for Surveys, Assessment and Repair of Hull Structure	
Part 2	**Fore and aft end regions**	**Example No.**
Area 3	**Stern frame, rudder arrangement and propeller shaft support**	**1**
Detail of damage	Fracture in rudder stock	

Sketch of damage

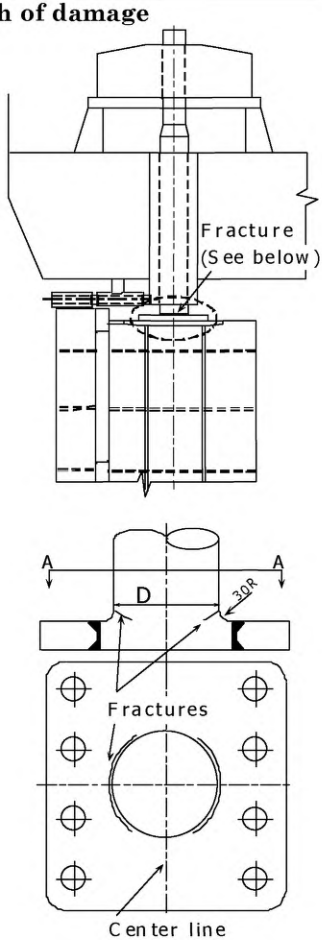

View A - A

Sketch of repair

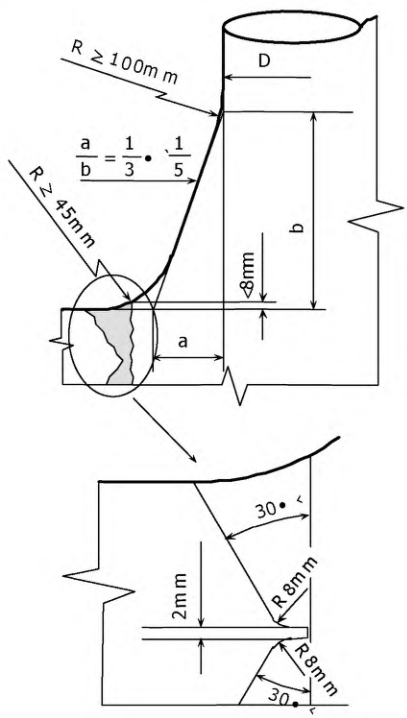

Notes on possible cause of damage

1. Inadequate design for stress concentration in rudder stock.

Notes on repairs

1. Modification of detail design of rudder stock to reduce the stress concentration.

GENERAL CARGO SHIPS	Guidelines for Surveys, Assessment and Repair of Hull Structure	
Part 2	**Fore and aft end regions**	**Example No.**
Area 3	**Stern frame, rudder arrangement and propeller shaft support**	**2**
Detail of damage	Fracture in connection of palm plate to rudder blade	

Sketch of damage

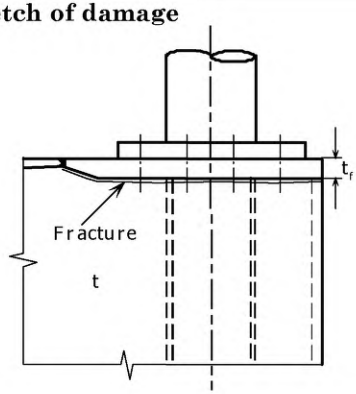

Sketch of repair

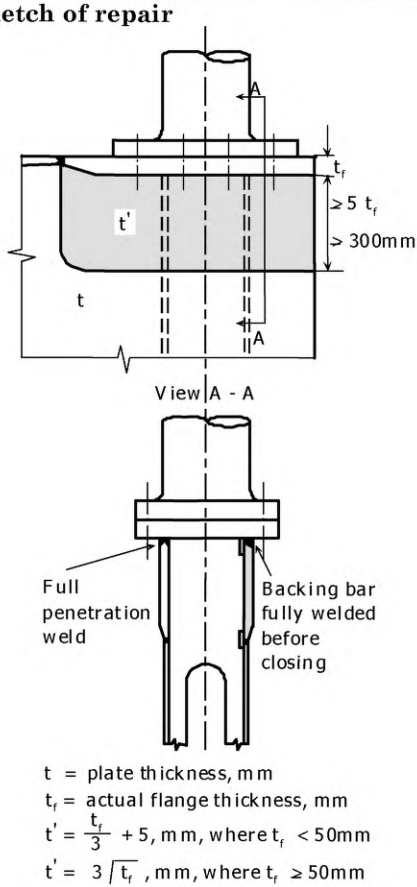

t = plate thickness, mm

t_f = actual flange thickness, mm

$t' = \frac{t_f}{3} + 5$, mm, where $t_f < 50$mm

$t' = 3\sqrt{t_f}$, mm, where $t_f \geq 50$mm

Notes on possible cause of damage

1. Inadequate connection between palm plate and rudder blade plating (insufficient plating thickness and/or insufficient fillet weld).

Notes on repairs

1. Modification of detail design of the connection by increasing the plate thickness and full penetration welding.

GENERAL CARGO SHIPS	Guidelines for Surveys, Assessment and Repair of Hull Structure	
Part 2	Fore and aft end regions	Example No.
Area 3	Stern frame, rudder arrangement and propeller shaft support	3
Detail of damage	Fracture in rudder plating of semi-spade rudder (short fracture with end located forward of the vertical web)	

Sketch of damage

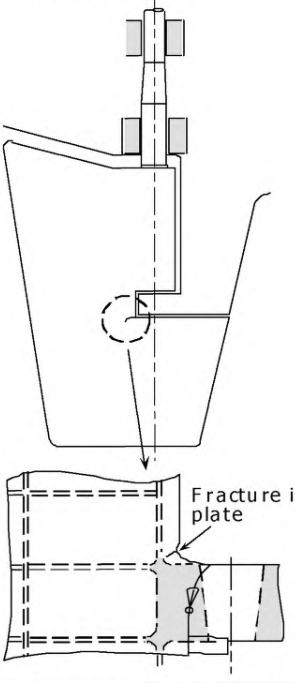

Sketch of repair

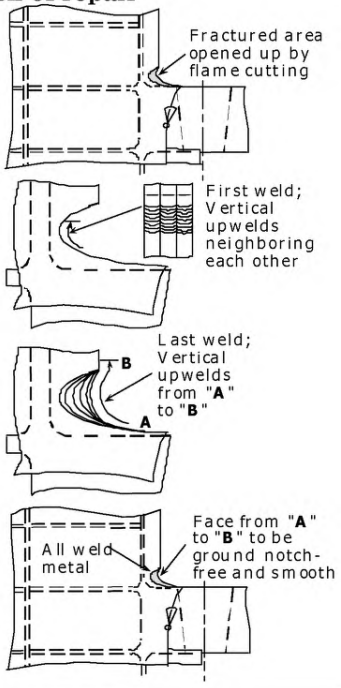

Notes on possible cause of damage

1. Stress concentration due to inadequate local design and/or fabrication notches in way of the butt weld between cast piece and plating.

Notes on repairs

1. Grooving-out and welding of the fracture is not always adequate (metallurgical notch in way of a high stressed area).
2. In the proposed repair procedure the metallurgical notches are shifted into a zone exposed to lower stresses.
3. After welding a modification of the radius according to the proposal in **Example 5** is to be carried out.
4. In case of very small crack it can be ground off by increasing the radius.

GENERAL CARGO SHIPS	Guidelines for Surveys, Assessment and Repair of Hull Structure	
Part 2	**Fore and aft end regions**	**Example No.**
Area 3	**Stern frame, rudder arrangement and propeller shaft support**	**4**
Detail of damage	Fracture in rudder plating of semi-spade rudder extending beyond the vertical web	

Sketch of damage

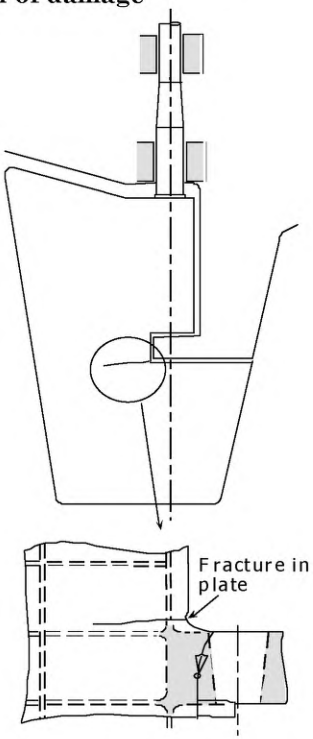

Sketch of repair

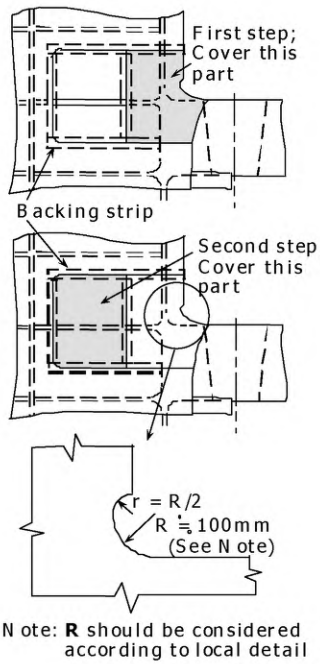

Notes on possible cause of damage

1. Stress concentration due to inadequate local design and/or fabrication notches in way of the butt weld between cast piece and plating.

Notes on repairs

1. Fractured plating is to be cut-out.
2. Internal structures are to be checked.
3. Cut-out is to be closed by an insert plating according to the sketch (welding only from one side is demonstrated).
4. Modification of the radius.
5. In case of a new cast piece, connection with the plating is to be shifted outside the high stress area.

GENERAL CARGO SHIPS	Guidelines for Surveys, Assessment and Repair of Hull Structure	
Part 2	Fore and aft end regions	Example No.
Area 3	Stern frame, rudder arrangement and propeller shaft support	5
Detail of damage	Fracture in rudder plating of semi-spade rudder in way of pintle cutout	

Sketch of damage

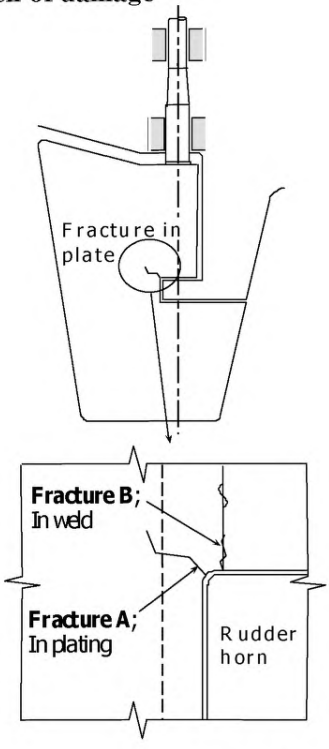

Sketch of repair

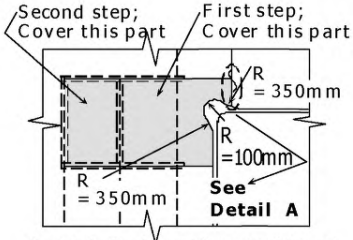

Note: 1. **R** should be considered according to local detail
2. New contour should be ground smooth.

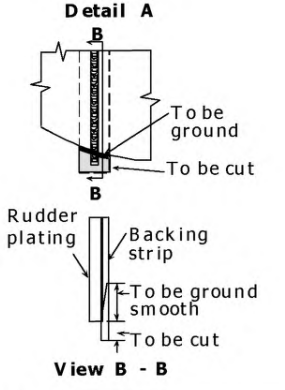

Notes on possible cause of damage

1. Inadequate design for stress concentration in way of pintle bearing
2. (**Fracture A**). Imperfection in welding seam (**Fracture B**).

Notes on repairs

1. Fractured part to be cropped off.
2. Repair by two insert plates of modified, stress releasing contour. For the vertical seam no backing strip is used 100mm off contour, welding from both sides, to be ground after welding.
3. Variant (See **Detail A**): Repair as mentioned under 2 with the use of backing strip for the compete vertical seam. After welding backing strip partly removed by grinding.

GENERAL CARGO SHIPS	Guidelines for Surveys, Assessment and Repair of Hull Structure	
Part 2	**Fore and aft end regions**	**Example No.**
Area 3	**Stern frame, rudder arrangement and propeller shaft support**	**6**
Detail of damage	Fracture in side shell plating at the connection to propeller boss	

Sketch of damage

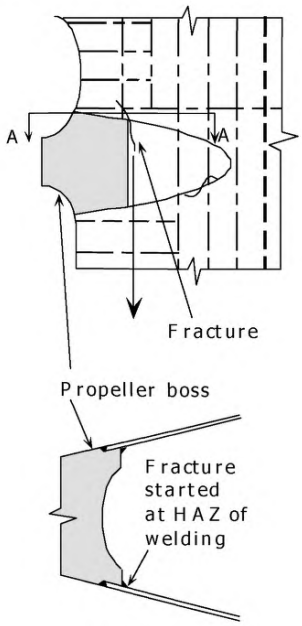

Sketch of repair

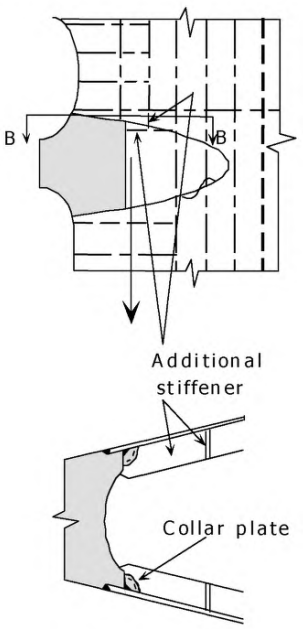

Notes on possible cause of damage

1. Fatigue fracture due to vibration.

Notes on repairs

1. Fractured side shell plating is to be cropped and part renewed.
2. Additional stiffeners are to be provided.
3. Collar plate is to be provided.

GENERAL CARGO SHIPS	Guidelines for Surveys, Assessment and Repair of Hull Structure	
Part 2	**Fore and aft end regions**	**Example No.**
Area 3	**Stern frame, rudder arrangement and propeller shaft support**	**7**
Detail of damage	Fracture in stern tube at the connection to stern frame	

Sketch of damage

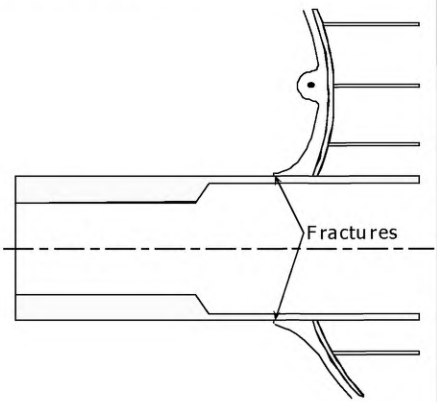

Sketch of repair

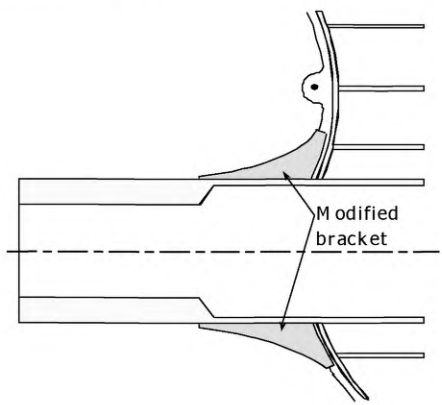

Notes on possible cause of damage

1. Fatigue fracture due to vibration.

Notes on repairs

1. Fractured tube is to be welded from both sides.
2. Brackets are to be replaced by modified brackets with soft transition.

Part 3 Machinery and accommodation spaces

Area 1 Engine room structure
Area 2 Accommodation structure

Area 1 Engine room structure

Contents

1 General

2 What to look for
2.1 Material wastage
2.2 Fractures

3 General comments on repair
3.1 Fractures

Examples of structural detail failures and repairs - Area 1	
Example No.	Title
1	Fractures in brackets at main engine foundation
2	Corrosion in bottom plating under sounding pipe in way of bilge storage tank
3	Corrosion in bottom plating under inlet/suction pipe in way of bilge storage tank

1 General

1.1 The engine room structure is categorized as follows.

- Boundary structure which consists of upper deck, bulkhead, inner bottom plating, funnel, etc.
- Deep tank structure
- Double bottom tank structure

The boundary structure can generally be inspected routinely. Therefore, if damage is found, it can be easily rectified. Other structures, however, cannot be inspected routinely and therefore damage is found only when the ship is dry-docked or a problem has occurred.

2 What to look for

2.1 Material wastage

2.1.1 Boundary structure

Tank top plating, shell plating and bulkhead plating adjacent to the tank top plating may have severe corrosion due to sea water which is derived from leakage or lack of maintenance of sea water lines.

In drydock the bilge well should be cleaned and inspected carefully, because the bilge well may have heavy pitting corrosion due to sea water which is derived from leakage at the gland packing or maintenance operation of machinery.

The funnel consists of part of the boundary structure and it often has serious corrosion which may impair fire fighting of engine room in addition to weathertightness.

2.1.2 Double bottom tank

The bilge tank is under relatively severe corrosion environment compared to other double bottom tanks, since oily bilge containing sea water is put into the tank. Severe corrosion may result in a hole in the bottom plating, especially under the sounding pipe. In cofferdam pitting corrosion caused by sea water entering from the air pipe is seldom found.

2.2 Fractures

2.2.1 Deep tank

In general deep tanks for fresh water or fuel oil are provided in the engine room. These tank structures often have fractures due to vibration. Since the double bottom structure in the engine room is extremly rigid, fractures in this structure are very rare.

3 General comments on repair

3.1 Fractures

3.1.1 Deep tank

For fractures caused by vibration, consideration should be paid to change the natural frequency of the structure in addition to repairing damage to the structure. This may be achieved by adding proper additional structural

members. However, this is often very difficult and many tentative tests may be needed before reaching the desired solution.

GENERAL CARGO SHIPS	Guidelines for Surveys, Assessment and Repair of Hull Structure	
Part 3	**Machinery and accommodation spaces**	**Example No.**
Area 1	**Engine room structure**	**1**
Detail of damage	Fractures in brackets at main engine foundation	

Sketch of damage

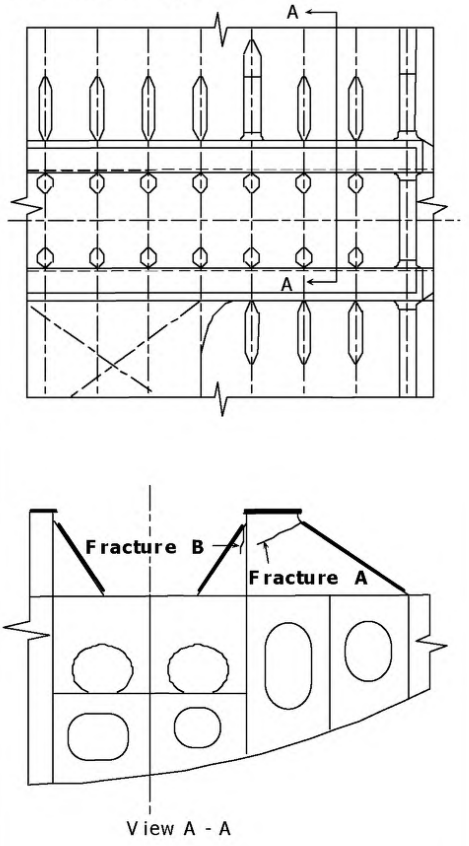

Sketch of repair

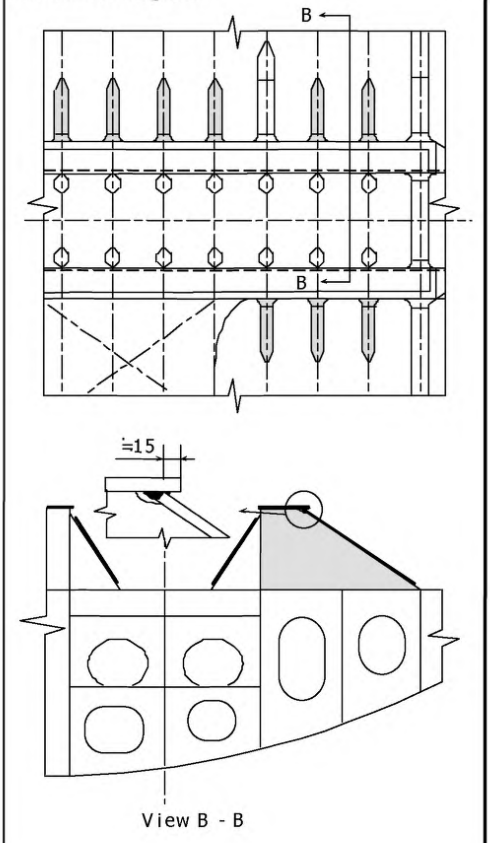

Notes on possible cause of damage

1. Vibration of main engine.
2. Insufficient strength of brackets at main engine foundation.
3. Insufficient pre-load of the bolts.

Notes on repairs

1. Fractures may be veed-out and
2. rewelded.
   New modified brackets at main engine foundation.
   Or insert pieces and additional flanges to increase section modulus of the brackets.

GENERAL CARGO SHIPS	Guidelines for Surveys, Assessment and Repair of Hull Structure	
Part 3	**Machinery and accommodation spaces**	**Example No.**
Area 1	**Engine room structure**	**2**
Detail of damage	Corrosion in bottom plating under sounding pipe in way of bilge storage tank in engine room	

Sketch of damage

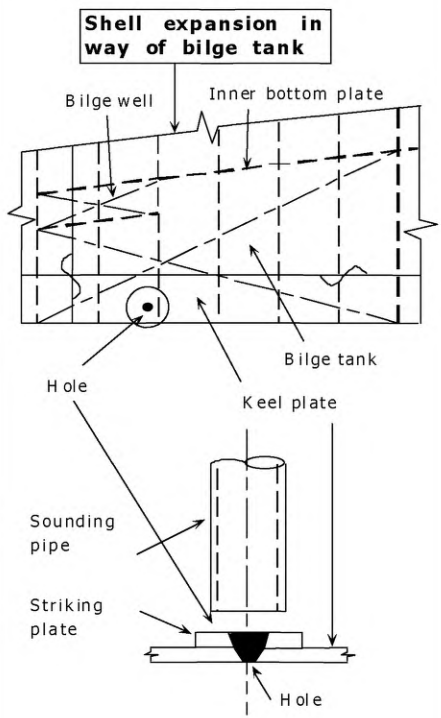

Sketch of repair

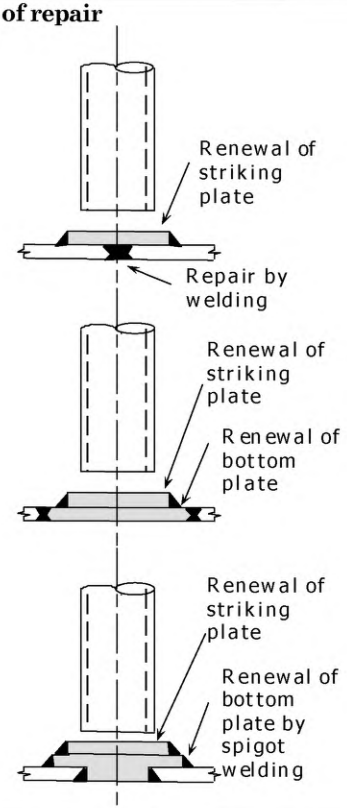

Notes on possible cause of damage

1. Heavy corrosion of bottom plating under sounding pipe.

Notes on repairs

1. Corroded striking plating should be renewed.
2. Bottom plate should be repaired depending on the condition of corrosion.
   (Note)
   Repair by spigot welding can be applied to the structure only when the stress level is considerably low. Generally this procedure cannot be applied to the repair of bottom plating of ballast tanks in cargo hold region.

GENERAL CARGO SHIPS	Guidelines for Surveys, Assessment and Repair of Hull Structure	
Part 3	**Machinery and accommodation spaces**	**Example No.**
Area 1	**Engine room structure**	**3**
Detail of damage	Corrosion in bottom plating under inlet/suction/pipe in way of bilge tank in engine room	

Sketch of damage

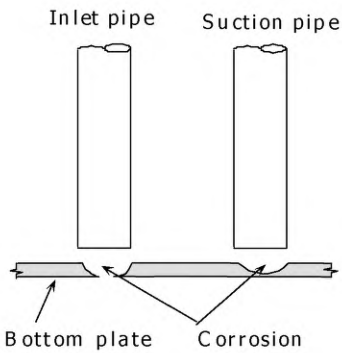

Sketch of repair

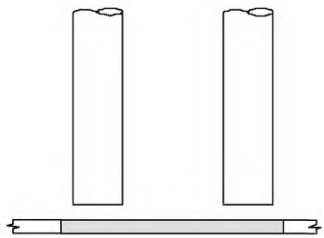

Notes on possible cause of damage

1. Heavy corrosion of bottom plating under the inlet/suction pipe.

Notes on repairs

1. Corrode bottom plate is to be cropped and part renewed. Thicker plate is
2 preferable.
   Replacement of pipe end by enlarged conical opening (similar to suction head in ballast tank) is preferable.

Area 2 Accommodation structure

Contents

1 General/General comments to repair

Figures and/or Photographs - Area 1	
No.	Title
Photograph 1	Corroded accommodation house structure

1 General/General comments to repair

1.1 General

Generally accommodation structures have few damages compared to other structures due to low stress levels.

The main damage is corrosion which may cause serious problems since the structure is relatively thin. Serious corrosion may be found in exposed deck plating and its adjoining accommodation house structure where water is liable to collect (See **Photograph 1**). Corrosion is also found in accommodation bulkheads where fittings such as doors, side scuttles, ventilators, etc. are fitted and proper maintenance of the area is relatively difficult. Deterioration of the bulkheads including fittings may impair the integrity of weathertightness.

Fractures caused by vibration may be found, in the structure itself and in various stays for such structures, mast, antenna etc. For such fractures consideration should be paid to change the natural frequency of the structure in addition to the repair.



Photograph 1 Corroded accommodation house structure



International Association of
Classification Societies 1999

gost.e-ecolog.ru