No. 96 (April 2007) **Double Hull Oil Tankers -** Guidelines for Surveys, Assessment and Repair of Hull Structures

gost.e-ecolog.ru

IACS

**INTERNATIONAL ASSOCIATION
OF CLASSIFICATION SOCIETIES**



DOUBLE HULL OIL TANKERS

Guidelines for Surveys, Assessment and Repair of Hull Structures

Copyright
© IACS - the International Association of Classification Societies and the International Association of Classification Societies Limited, 2007.

All rights reserved.

Except as permitted under current English legislation no part of this work may be photocopied, stored in a retrieval system, published, performed in public, adapted, broadcast, transmitted, recorded or reproduced in any form or by means, without prior permission of the copyright owner.

Where IACS has granted written permission for any part of this publication to be quoted such quotation must include acknowledgement to IACS.

Enquiries should be addressed to the Permanent Secretary:

International Association of Classification Societies Ltd,
36 Broadway
London, SW1H 0BH
Telephone: 020 7976 0660
Fax: 020 7808 1100
Email: gost.e-ecolog.ru

Terms and Conditions

The International Association of Classification Societies (IACS), its Member Societies and IACS Ltd. and their directors, officers, members, employees and agents (on behalf of whom this notice is issued) shall be under no liability or responsibility in contract or negligence or otherwise howsoever to any person in respect of any information or advice expressly or impliedly given in this document, or in respect of any inaccuracy herein or omission herefrom or in respect of any act or omission which has caused or contributed to this document being issued with the information or advice it contains (if any).
Without derogating from the generality of the foregoing, neither the International Association of Classification Societies (IACS) nor IACS Ltd. nor its Member Societies nor their directors, officers, members, employees or agents shall be liable in contract or negligence or otherwise howsoever for any direct, indirect or consequential loss to any person caused by or arising from any information, advice, inaccuracy or omission given or contained herein or any act or omission causing or contributing to any such information, advice, inaccuracy or omission given or contained herein.

Any dispute concerning the provision of material herein is subject to the exclusive jurisdiction of the English courts and will be governed by English Law.

Note: Cover photo used with the kind permission of Novoship

Contents

1 Introduction

2 Classification survey requirements
2.1 General
2.2 Annual Surveys
2.3 Intermediate Surveys
2.4 Special Surveys
2.5 Drydocking (Bottom) Surveys
2.6 Damage and Repair Surveys

3 Technical background for surveys
3.1 General
3.2 Definitions
3.3 Structural Load Descriptions
3.4 Structural defects, damages and deterioration
3.5 Structural detail failures and repairs

4 Survey planning, preparation and execution
4.1 General
4.2 Survey Programme
4.3 Survey Planning Meeting
4.4 Conditions for survey
4.5 Access arrangement and safety
4.6 Use of Boats and Rafts
4.7 Personal equipment
4.8 Thickness measurement and fracture detection
4.9 Survey at sea or at anchorage
4.10 Documentation on board
4.11 Reporting and Evaluation of Survey

5 Structural detail failures and repairs
5.1 General
5.2 Actions to be taken by the Classification Society when Fatigue Failures have been Identified
5.3 Catalogue of structural detail failures and repairs
1 Bilge Hopper
2 Wing Ballast Tank
3 Bottom Ballast Tank
4 Web Frames in Cargo Tanks
5 Transverse Bulkhead in Cargo Tank
6 Deck Structure
7 Fore and Aft End Regions
8 Machinery and Accommodation Spaces

1 Introduction

The International Association of Classification Societies (IACS) is introducing a series of manuals with the intention of giving guidelines to assist the Surveyors of IACS Member Societies, and other interested parties involved in the survey, assessment and repair of hull structures for certain ship types.

This manual gives guidelines for a double hull oil tanker which is constructed primarily for the carriage of oil in bulk and which has the cargo tanks protected by a double hull which extends for the entire length of the cargo area, consisting of double sides and double bottom spaces for the carriage of water ballast or void spaces. **Figures 1 & 2** show the general views of typical double hull oil tankers with two longitudinal bulkheads or one centreline longitudinal bulkhead respectively.

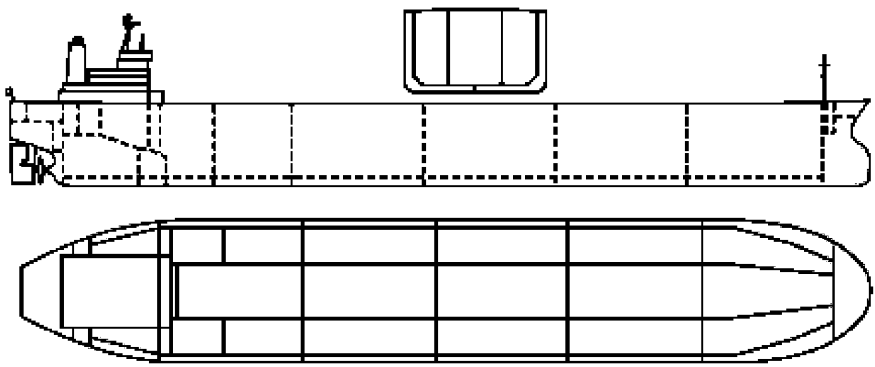

Figure 1 General view of a typical double hull oil tanker (150,000 DWT and greater)

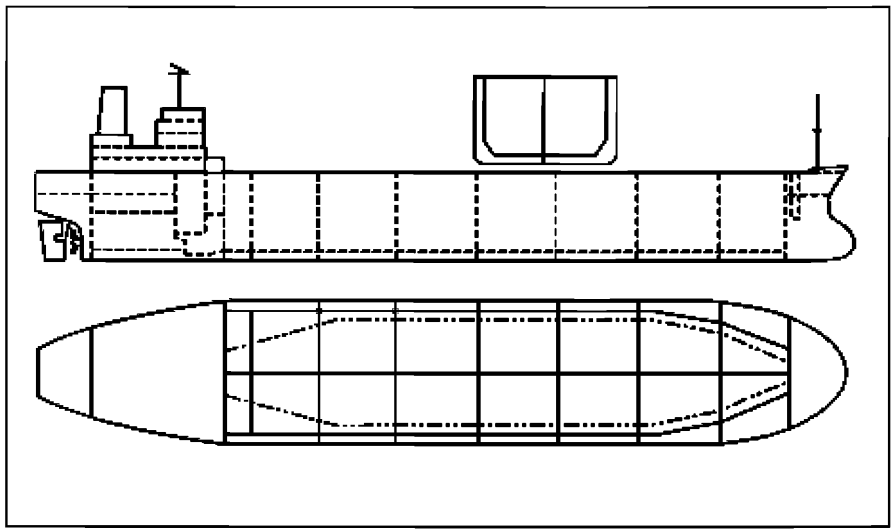

Figure 2 General view of a typical double hull oil tanker (150,000 DWT or less)

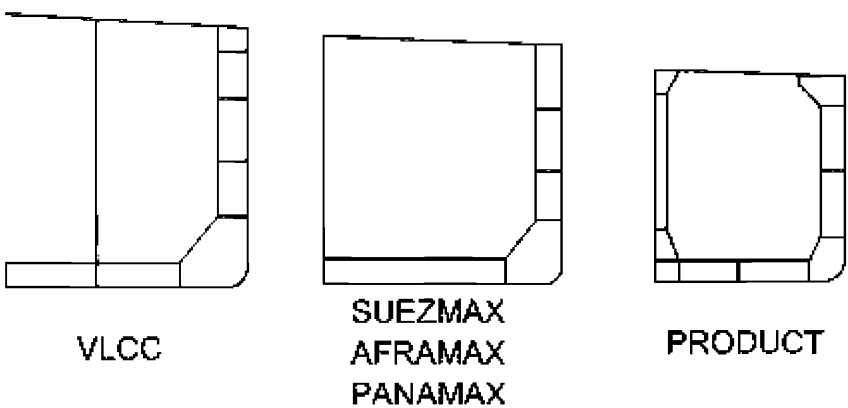

Figure 3 Categories of Bulkhead Configurations

Figures 4 to 6 show the typical nomenclature used for the midship section and transverse bulkhead.

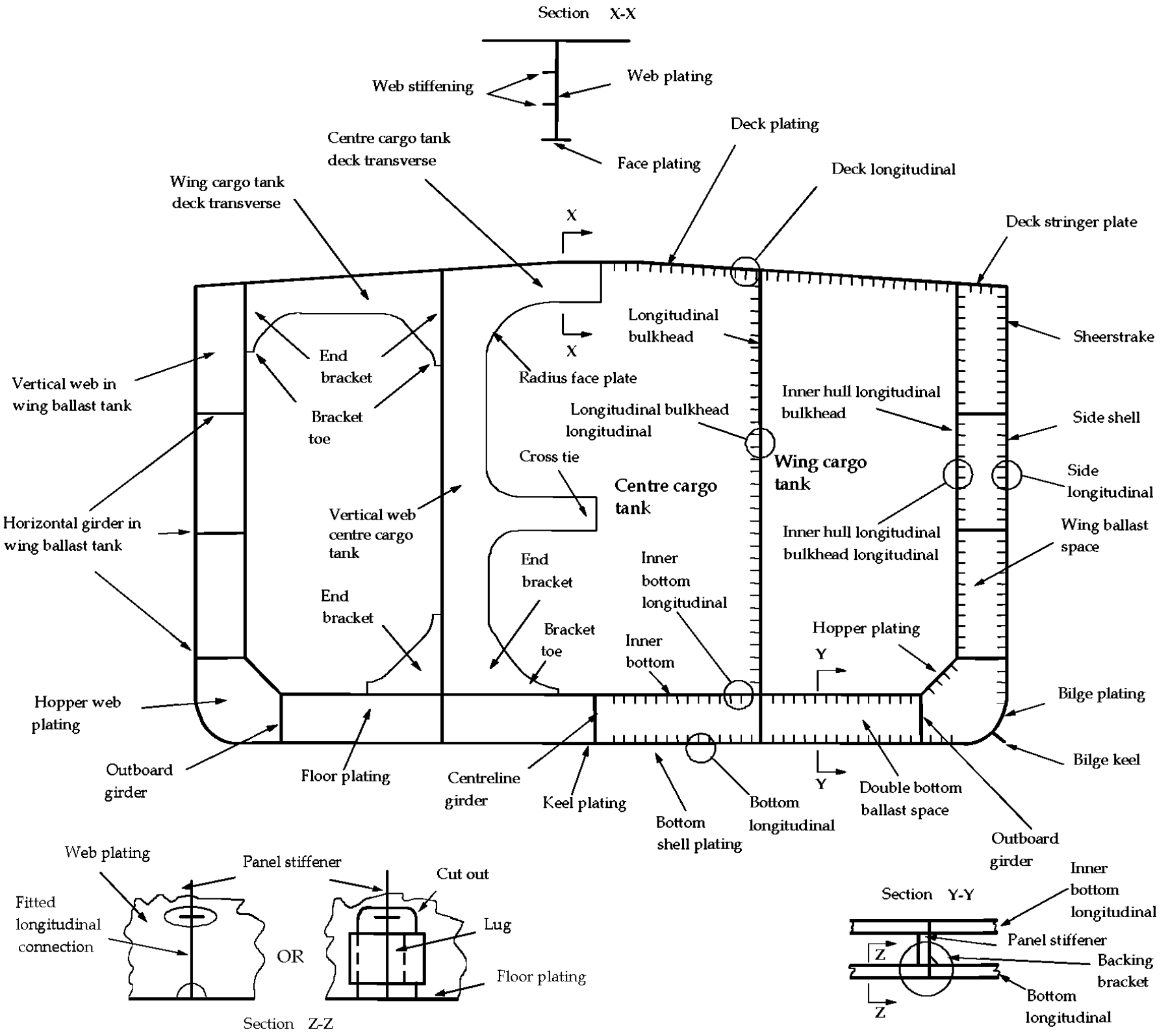

Figure 4 Typical midship section of a double hull oil tanker with two longitudinal bulkheads including nomenclature

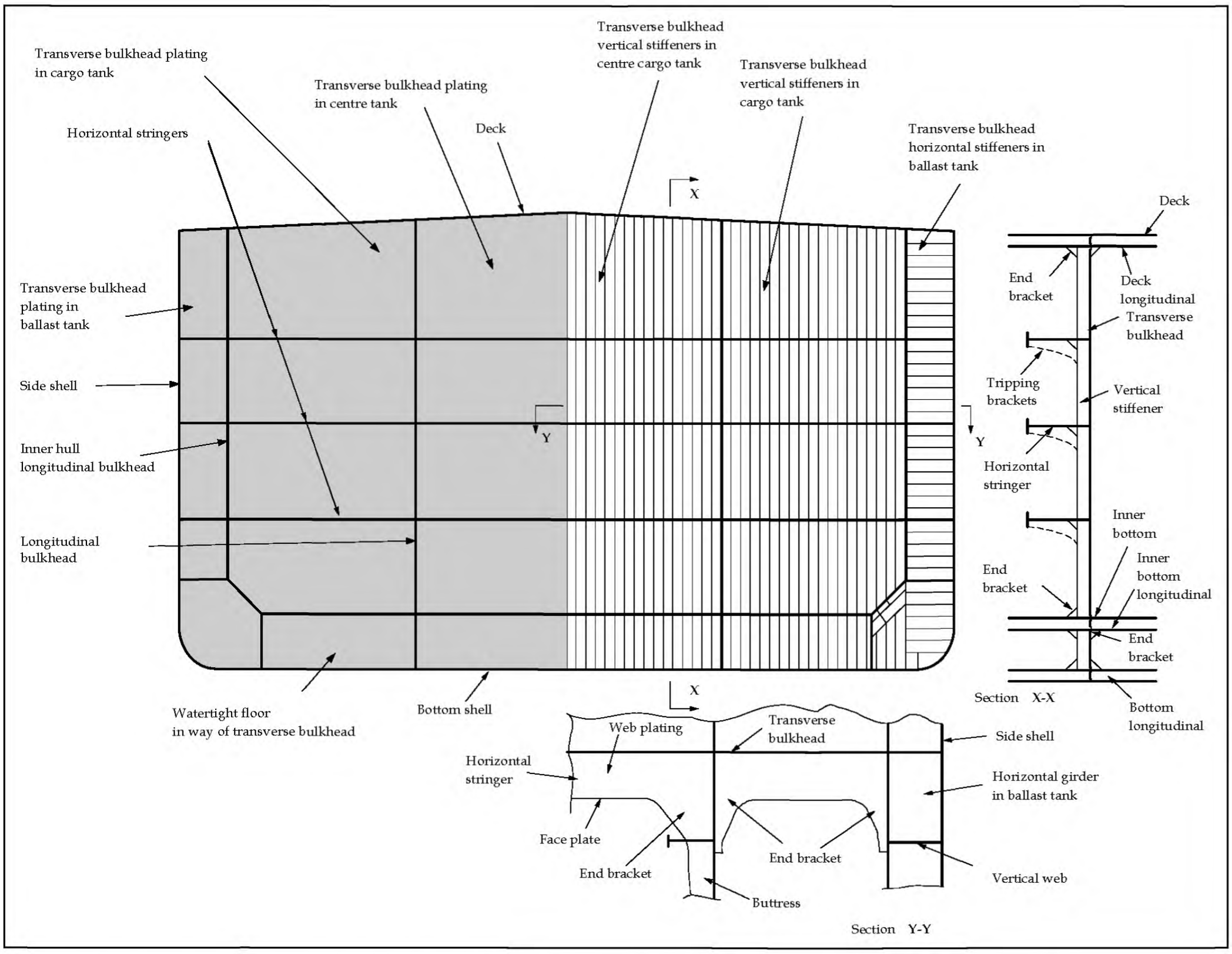

Figure 5 Double Hull Tanker – Typical Transverse Bulkhead

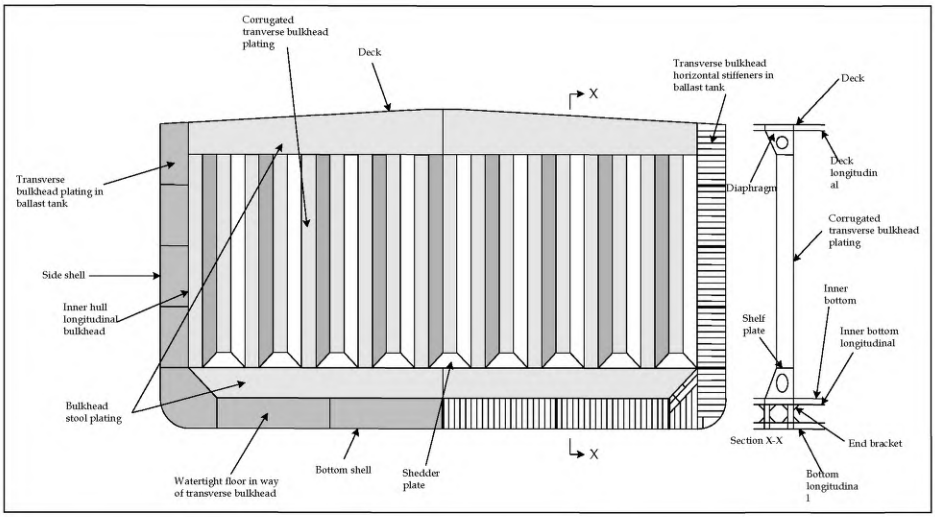

Figure 6 Corrugated Transverse Bulkhead Nomenclature

The guidelines focus on the IACS Member Societies' survey procedures but may also be useful in connection with survey/examination schemes of other regulatory bodies, owners and operators.

The manual includes a review of survey preparation guidelines, which cover the safety aspects related to the performance of the survey, the necessary access facilities, and the preparation necessary before the surveys can be carried out.

The survey guidelines encompass the different main structural areas of the hull where damages have been recorded, focusing on the main features of the structural items of each area.

An important feature of the manual is the inclusion of the section, which illustrates examples of structural deterioration and damages related to each structural area and gives what to look for, possible cause, and recommended repair methods, when considered appropriate.

This manual has been developed using the best information currently available. It is intended only as guidance in support of the sound judgment of Surveyors, and is to be used at the Surveyors' discretion. It is recognized that alternative and satisfactory methods are already applied by Surveyors. Should there be any doubt with regard to interpretation or validity in connection with particular applications, clarification should be obtained from the Classification Society concerned.

Surveyors dealing with single hull oil tankers should be encouraged to read the "Guidance Manual for Oil Tankers" by Tanker Structure Co-operative Forum.

IACS Common Structural Rules for Tankers implemented from April 2006 have been

developed in response to a consistent and persistent call from industry for an increased standard of structural safety. This has been achieved through enhancing the design basis and applying engineering first principles. The development of the CSR for Tankers included review of existing Rules, new development using a first principle approach, application of the net thickness philosophy, an enhanced design environment and a longer life i.e. 25 years North Atlantic. These Rules are applicable to double hull oil tankers exceeding a length of 150 metres.

Note: Throughout this document reference is made to various IACS Unified Requirements (UR), Procedural Requirements (PR) and Recommendations. All URs and PRs and key recommendations are available from the IACS website (gost.e-ecolog.ru).

2 Classification Survey Requirements

2.1 General

2.1.1 The programme of periodical surveys is of prime importance as a means for assessment of the structural condition of the hull, in particular, the structure of cargo and ballast tanks. The programme consists of Special (or Renewal) Surveys carried out at five-year interval with Annual and Intermediate Surveys carried out in between Special Surveys.

2.1.2 Since 1991, it has been a requirement for new oil tankers to apply a protective coating to the structure in water ballast tanks, which form part of the hull boundary.

2.1.3 From 1 July 2001, oil tankers of 20,000 DWT and above, to which the Enhanced Survey Programme (ESP) requirements apply, starting with the 3rd Special Survey, all Special and Intermediate hull classification surveys are to be carried out by at least two exclusive Surveyors. Further, one exclusive Surveyor is to be on board while thickness measurements are taken to the extent necessary to control the measurement process. From 1 July 2005, thickness measurements of structures in areas where close-up surveys are required are to be carried out simultaneously with close-up surveys. Refer to IACS PR 19 and PR 20.

2.1.4 The detailed survey requirements complying with ESP are specified in the Rules and Regulations of each IACS Member Society.

2.1.5 ESP is based on two principal criteria: the condition of the coating and the extent of structural corrosion. Of primary importance is when a coating has been found to be in a "less than good" condition ("good" is with only minor spot rusting) or when a structure has been found to be *substantially* corroded (i.e. a wastage between 75 % and 100 % of the allowable diminution for the structural member in question). Note, for vessels built under the IACS Common Structural Rules, substantial corrosion is an extent of corrosion such that the assessment of the corrosion pattern indicates a gauged (or measured) thickness between t_{net} + 0.5mm and t_{net}.

Reference is also made to SOLAS 74 as amended regulation Part A-1/3.2 regarding corrosion protection system for seawater ballast tanks at time of construction.

2.2 Annual Surveys

2.2.1 The purpose of an Annual Survey is to confirm that the general condition of the hull is maintained at a satisfactory level.

2.2.2 Generally as the ship ages, ballast tanks are required to be subjected to more extensive overall and close-up surveys at Annual Surveys.

2.2.3 In addition, a Ballast Tank is to be examined at annual intervals where:

a. a hard protective coating has not been applied from the time of construction, or
b. a soft coating has been applied, or
c. substantial corrosion is found within the tank at a previous survey, or
d. the hard protective coating is found to be in less than GOOD condition and the hard protective coating is not repaired to the satisfaction of the Surveyor at a previous survey.

2.3 Intermediate Surveys

2.3.1 The Intermediate Survey may be held at or between the second or third Annual Survey in each five year Special Survey cycle. Those items, which are additional to the requirements of the Annual Surveys, may be surveyed either at or between the 2nd and 3rd Annual Survey. The intermediate survey contains requirements for extended overall and close-up surveys including thickness measurements of cargo and ballast tanks.

2.3.2 Areas in ballast tanks and cargo tanks found suspect at the previous surveys are subject to overall and close-up surveys, the extent of which becomes progressively more extensive commensurate with the age of the vessel.

2.3.3 For oil tankers exceeding 10 years of age, the requirements of the Intermediate Survey are to be of the same extent as the previous Special Survey. However, pressure testing of cargo and ballast tanks and the requirements for longitudinal strength evaluation of Hull Girder are not required unless deemed necessary by the attending Surveyor.

2.4 Special Surveys

2.4.1 The Special (or Renewal) Surveys of the hull structure are carried out at five-year intervals for the purpose of establishing the condition of the structure to confirm that the structural integrity is satisfactory in accordance with the Classification Requirements, and will remain fit for its intended purpose for another five-year period, subject to proper maintenance and operation of the ship and to periodical surveys carried out at the due dates.

2.4.2 The Special Survey concentrates on close-up surveys in association with thickness measurements and is aimed at detecting fractures, buckling, corrosion and other types of structural deterioration. See Figure 7.

2.4.3 Thickness measurements are to be carried out upon agreement with the Classification Society concerned in conjunction with the Special Survey.

The Special Survey may be commenced at the 4th Annual Survey and be progressed with a view to completion by the 5th anniversary date.

2.4.4 Deteriorated protective coating in *less than good* condition in salt water ballast spaces and structural areas showing substantial corrosion and/or considered by the

Surveyor to be prone to rapid wastage will be recorded for particular attention during the following survey cycle, if not repaired at the special survey.

2.5 Drydocking (Bottom) Surveys

2.5.1 There is to be a minimum of two examinations of the outside of the ship's bottom and related items during each five-year special survey period. One such examination is to be carried out in conjunction with the special survey. In all cases the interval between any two such examinations is not to exceed 36 months. An extension of examination of the ship's bottom of 3 months beyond the due date can be granted in exceptional circumstances. Refer to IACS Unified Requirement Z3.

2.5.2 For oil tankers of 15 years of age and over, survey of the outside of the ship's bottom is to be carried out with the ship in dry dock. For oil tankers less than 15 years of age, alternative surveys of the ship's bottom not conducted in conjunction with the Special Survey may be carried out with the ship afloat. Survey of the ship afloat is only to be carried out when; the conditions are satisfactorily and the proper equipment and suitably qualified staff are available.

2.6 Damage and repair surveys

2.6.1 Damage surveys are occasional surveys, which are, in general, outside the programme of periodical hull surveys and are requested as a result of hull damage or other defects. It is the responsibility of the owner or owner's representative to inform the Classification Society concerned when such damage or defect could impair the structural capability or watertight integrity of the hull. The damages should be inspected and assessed by the Society's Surveyors and the relevant repairs, if needed, are to be performed. In certain cases, depending on the extent, type and location of the damage, permanent repairs may be deferred to coincide with the planned periodical survey.

Any damage in association with wastage over the allowable limits (including buckling, grooving, detachment or fracture), or extensive areas of wastage over the allowable limits, which affects or, in the opinion of the Surveyor, will affect the vessel's structural watertight or weathertight integrity, is to be promptly and thoroughly repaired. Areas to be considered to are to include:

- bottom structure and bottom plating;
- side structure and side plating;
- deck structure and deck plating;
- watertight or oiltight bulkheads.

2.6.2 In cases of repairs intended to be carried out by riding crew during voyage, the complete procedure of the repair, including all necessary surveys, is to be submitted to and agreed upon by the Classification Society reasonably in advance.

2.6.3 IACS Unified Requirement Z13 "Voyage Repairs and Maintenance" provides useful guidance for repairs to be carried out by a riding crew during a voyage.

2.6.4 For locations of survey where adequate repair facilities are not available, consideration may be given to allow the vessel to proceed directly to a repair facility. This may require discharging the cargo and/or temporary repairs for the intended voyage. A suitable condition of class will be imposed when temporary measures are accepted.

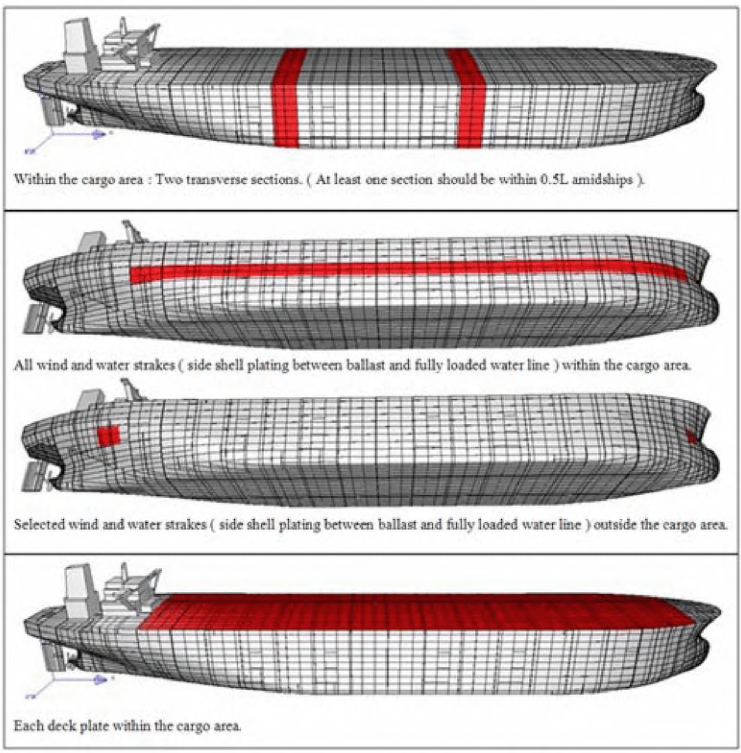

Figure 7 **Example of Transverse Sections of Shell Plating and Main Deck Thickness Measurement Requirements for an oil tanker 15 years of age.**

3 Technical Background for Surveys

3.1 General

3.1.1 The purpose of carrying out a structural survey of any tank is to determine the extent of corrosion wastage and structural defects present in the tank. To help achieve this and to identify key locations in the tank that might warrant special attention, the Surveyor should be familiar with the service record of the tank and any historical problems of the particular vessel or other vessels of a similar class.

An experienced Surveyor will be aware of typical structural defects likely to be encountered and some knowledge of the contributing factors to corrosion (including the effectiveness of corrosion control systems) will assist him in assessing the corrosion patterns he finds.

3.2 Definitions

3.2.1 For clarity of definition and reporting of survey data, it is recommended that standard nomenclature for structural elements be adopted. A typical midship section is illustrated in **Figures 4 to 6**. These figures show the generally accepted nomenclature.

The terms used in these guidelines are defined as follows:

(a) A **Ballast Tank** is a tank, which is used solely for the carriage of salt water ballast.

(b) A **Combined Cargo/Ballast Tank** is a tank, which is used for the carriage of cargo, or ballast water as a routine part of the vessel's operation and will be treated as a Ballast Tank. Cargo tanks in which water ballast might be carried only in exceptional cases per MARPOL I/13(3) are to be treated as cargo tanks.

(c) An **Overall Survey** is a survey intended to report on the overall condition of the hull structure and determine the extent of additional Close-up Surveys.

(d) A **Close-up Survey** is a survey where the details of structural components are within the close visual inspection range of the Surveyor, i.e. normally within reach of hand.

(e) A **Transverse Section** includes all longitudinal members such as plating, longitudinals and girders at the deck, sides, bottom, inner bottom and longitudinal bulkheads.

(f) **Representative Tanks** are those, which are expected to reflect the condition of other tanks of similar type and service and with similar corrosion prevention systems. When selecting Representative Tanks account is to be taken of the service and repair history onboard and identifiable Critical Structural Areas and/or Suspect Areas.

Note: Critical Structural Areas are locations, which have been identified from calculations to require monitoring or from the service history of the subject ship or from similar or sister ships (if available) to be sensitive to cracking, buckling or corrosion, which

would impair the structural integrity of the ship. For additional details refer to Annex I of IACS Unified Requirement Z10.4.

(g) **Suspect Areas** are locations showing Substantial Corrosion and/or are considered by the Surveyor to be prone to rapid wastage.

(h) **Substantial Corrosion** is an extent of corrosion such that assessment of corrosion pattern indicates a wastage in excess of 75% of allowable margins, but within acceptable limits.

For vessels built under the IACS Common Structural Rules, substantial corrosion is an extent of corrosion such that the assessment of the corrosion pattern indicates a gauged (or measured) thickness between t_{net} + 0.5mm and t_{net}.

(i) A **Corrosion Prevention System** is normally considered a full hard coating. Hard Protective Coating is usually to be epoxy coating or equivalent. Other coating systems may be considered acceptable as alternatives provided that they are applied and maintained in compliance with the manufacturer's specification.

(j) Coating condition is defined as follows:

- **GOOD** condition with only minor spot rusting,
- **FAIR** condition with local breakdown at edges of stiffeners and weld connections and/or light rusting over 20% or more of areas under consideration, but less than as defined for POOR condition,
- **POOR** condition with general breakdown of coating over 20% or more, or hard scale at 10% or more, of areas under consideration.

Reference is made to IACS Recommendation No.87 "Guidelines for Coating Maintenance & Repairs for Ballast Tanks and Combined Cargo / Ballast Tanks on Oil Tankers" which contains clarification of the above.

(k) **Cargo Area** is that part of the ship which contains cargo tanks, slop tanks and cargo/ballast pump-rooms, cofferdams, ballast tanks and void spaces adjacent to cargo tanks and also deck areas throughout the entire length and breadth of the part of the ship over the above mentioned spaces.

(l) **Special consideration** or **specially considered** (in connection with close-up surveys and thickness measurements) means sufficient close-up survey and thickness measurements are to be taken to confirm the actual average condition of the structure under the coating.

(m) A **Prompt and Thorough Repair** is a permanent repair completed at the time of survey to the satisfaction of the Surveyor, therein removing the need for the imposition of any associated condition of classification, or recommendation.

3.3 Structural Load Descriptions

(a) Structural Aspects

A tanker must maintain its structural integrity and water tight envelope when exposed to internal static and dynamic liquid loads, including sloshing loads, to external hydrostatic and dynamic sea loads, and to longitudinal hull girder bending. Longitudinally stiffened

plate is typically the primary structure of a tanker. This stiffened plate is supported by web frames, girders and bulkheads. The hydrostatic and hydrodynamic pressures flow from the plate through the stiffeners into the web frames, girders and bulkheads where they balance other loads or contribute to accelerations.

Most loads are cyclic with many different frequencies. The cyclic loads affecting fatigue are described in section 3.4.3. The following describe the loads that the major structural elements must resist.

(b) Tank Bottom Structures

The bottom structure must resist the axial loads from hull girder bending plus local bending from cargo, ballast and seawater pressure and structural loads from adjacent tanks. The hull girder bending loads are generally the highest midships and combine with the hydrostatic loads to generate the maximum stresses. The hydrostatic loads on the bottom are the highest in the vessel but are generally varying less than the side shell frame external wave loads.

(c) Side Shell, Longitudinal and Transverse Bulkheads

The side shell, longitudinal and transverse bulkheads maintain each tank's integrity and resist hydrostatic pressures as well as internal sloshing and external wave loads. The side shell and longitudinal bulkheads are also the webs of the hull girder and transmit the shear loads from tank to tank and along the length of the vessel. These members also contribute somewhat to resisting the longitudinal bending near the deck and bottom. The transverse bulkheads transmit the transverse shear loads and maintains the hull girder's form along with the transverse web frame rings.

The girders, stringers and vertical web frames that support the bulkheads resist bending and shear loads as they transmit the local pressure loads into the hull girder.

The hydrostatic loading increases linearly with depth and is often balanced with a liquid on the opposite side of the structure. The wave loading on the ship is cyclic and is the primary cause of the vessel fatigue, see section 3.4.3.

(d) Deckhead Structures

The main load on the deck is axial due to hull girder bending and transverse due to tank loading and waves. The axial stresses in the deck are the highest in the vessel as the upper deck is farthest from the neutral axis. While local loads are generally small on a tanker deck, equipment foundation loads, green water on deck and sloshing loads must be considered.

3.4 Structural defects, damages and deterioration

3.4.1 General

In the context of this manual, structural damages and deterioration imply deficiencies caused by:

- excessive corrosion
- design faults
- material defects or bad workmanship
- weld defects
- buckling
- fatigue
- navigation in extreme weather conditions
- loading and unloading operations, water ballast exchange at sea
- wear and tear
- contact (with quayside, ice, lightering service, touching underwater objects, etc.) but not as a direct consequence of accidents such as collisions, groundings and fire/explosions.

Deficiencies are normally recognized as:

- material wastage
- fractures
- deformations

The various types of deficiencies and where they may occur are discussed in more detail in subsequent sections.

3.4.2 Structural Defects

Structural defects include weld defects, buckling and fractures, see also **3.4.3** Fatigue. Fractures initiating at latent defects in welding more commonly appear at the beginning or end of a run, or rounding corners at the end of a stiffener or at an intersection. Special attention should be paid to welding at toes of brackets and cut-outs or intersections of welds. Fractures may also be initiated by undercutting in way of stress concentrations. Corrosion of welds may be rapid because of the influence of the deposited metal or the heat affected zone, and this may lead to stress concentrations.

Permanent buckling may arise as a result of overloading, overall reduction in thickness due to corrosion, or damage. Elastic buckling will not be directly obvious but may be detected by coating damage, stress lines or shedding of scale.

Some fractures may not be readily visible due to lack of cleanliness, difficulty of access, poor lighting or compression of the fracture surfaces at the time of survey. It is therefore important to identify and closely inspect potential problem areas. Fractures will normally initiate at notches, stress concentrations or weld defects. Where these initiation points are not apparent on one side, the structure on the other side of the plating should be examined.

The following areas where structural defects might occur should have special attention at the survey:

(a) Cargo Tanks
   i. Main deck deckhead: corrosion and fractures.
   ii. Buckling in web plate of the underdeck web frame and fractures at end of bracket toes.
   iii. Transverse bulkhead horizontal stringers: fractures in way of cut-outs and at end bracket toe connections to inner hull and longitudinal bulkhead.
   iv. Longitudinal bulkhead transverse web frames: fractures at end bracket toe connection to inner bottom.
   v. Necking effect of longitudinal web plating at longitudinal bulkhead plating.
   vi. For plane transverse bulkheads, transverse bulkhead vertical stiffeners connected to inner bottom: for vertically corrugated bulkheads, corrugation connection to lower shelf plate and bulkhead plating connection to inner bottom: fractures caused by misalignment and excessive fit-up gap.
   vii. Transverse bulkheads at the forward and after boundaries of the cargo space: fractures in way of inner bottom.
   viii. Pitting and grooving of inner bottom plating.

(b) Double Hull Ballast Spaces
   i. Main deck deckhead: corrosion and fractures.
   ii. Inner hull plate and stiffener: coating breakdown.
   iii. Buckling of the web plate in the upper and lower part of the web frame.
   iv. Fractures at the side shell longitudinal connection to web frames due to fatigue.
   v. Corrosion and fractures at knuckle joints in inner hull at forward and after parts of ship.
   vi. Corrosion and fractures at the juncture where the sloped inner hull is connected to the inner bottom.
   vii. Fractures at side and inner hull longitudinal connections to transverse bulkheads due to fatigue and/or high relative deflections.
   viii. Inner bottom deckhead corrosion at inner bottom.
   ix. Bottom corrosion wastage.
   x. Cracks at inner bottom longitudinal connection to double bottom floor web plating.
   xi. Fractures at inner bottom and bottom longitudinal; connection to transverse watertight floor due to high relative defections.

3.4.3 Fatigue

Fatigue is the most common cause of cracking in the structure of large tankers. The cracks generally develop at structural intersections of structural members or discontinuities where detailed design has led to a stress raiser such as a hot spot. Other reasons maybe related to material or welding defects, or some other type of notch.

Fatigue failures are caused by repeated cyclical stresses that individually would not be sufficient to cause failure but can initiate cracks, in particular in way of built in defects, which can grow to sufficient size to become significant structural failures. Typical cyclic loading mechanisms are:

- hull girder wave bending moments and shear forces;
- local pressure variation;
- cargo or ballast internal pressure variation.

If the crack remains undetected and unrepaired it can grow to a size where it can cause sudden fracture. However, it is unusual for a fatigue crack to lead directly to a catastrophic failure.

Fatigue failures can generally be considered to have three stages:

- Initiation
- Stable crack growth
- Unstable crack growth

In order to develop structural designs that will minimise the amount of fatigue cracking, and ensure that fatigue cracking does not cause a structural failure, it will be necessary to carry out greater investigation of fatigue strength than has traditionally been the case for large tankers.

Fatigue strength can be calculated using 2 methods:

- Compare calculated numbers of cyclic stress ranges with established fatigue criteria (S-N data).
- Calculate crack growth rates based on above stress range data and material properties.

(a) Typical Locations for High Sensitivity to Fatigue Failure

The following areas are considered to be prone to fatigue failure on double hull oil tankers:

- Side shell area below the load and ballast waterlines. These areas are subjected to the highest cycle loading through the ship's life due to the passage of waves along the side of the ship.
- Deck plating at connection to primary supporting members.
- Connection between transverse bulkheads to the upper and lower bulkhead stools.
- Connection between lower hopper sloping plating and inner bottom plating.

Where dynamic stresses are prevalent, the use of symmetrical profiles, such as "T" - section, will substantially reduce fatigue damage caused by biaxial bending on asymmetrical profiles.

The fatigue fractures in side longitudinal connections of higher tensile construction in

certain single hull VLCCs has now been well documented, and design details in way of these connections to increase fatigue life are now incorporated by many Shipyards as standard in double hull designs.

These details include the incorporation of soft-toed panel stiffeners with either soft-toed backing brackets or reversed radii at the heel of the panel stiffener.

It is therefore important that due consideration be given to this detail and other areas of potential problems at the design stage to reduce the risk of fatigue cracking during service.

(b) The Effect of Higher Tensile Steel

The higher yield strength of HTS has enabled a structure to be designed with higher stresses resulting in lighter scantlings. This does, however, also lead to an increase in the dynamic stress range. The fatigue damage is proportional to the stress range cubed, and HTS materials in welded connections have similar fatigue properties as mild steel. Therefore, it follows that the risk of high-cycle fatigue damage may increase for welded HTS connections in tankers when the increased strength capabilities are utilised.

The use of lighter scantlings often leads to higher deflections, which are particularly important at the side shell connections. In some HTS designs it is possible, that the deflections of the side shell web frames may be larger than in Mild Steel designs, due to the ability of the HTS material to accept higher stress levels in combination with structural arrangement such as wider web frame spacing and lack of cross ties. Such deflections add to the stress levels in the longitudinals at the intersections between the longitudinals and the transverse bulkheads, the additions being proportional to the deflections.

The notch toughness properties of all HTS used in the ship are verified by testing whereas mild steel A-grade is not. The notch toughness is an important parameter in the evaluation of resistance to brittle fracture. However, this would not have significant effect on the risk of crack initiation or the stable crack growth, but would have significant effect on the final unstable crack propagation.

The above factors have to be considered when designs of HTS are made, and today it is normal practice to improve the detail design in order to reduce the stress concentrations in areas where calculations show that high dynamic stress levels are expected. The shipside is particularly prone to high-cycle fatigue damage.

The overall effect when the higher strength of HTS is utilized for such locations, can be to significantly increase the risk of fatigue damage. By improving the detail design, it will usually be possible to obtain a fatigue life comparable to that for ordinary mild steel designs.

For locations where cracking is due to low-cycle fatigue, the use of HTS in local details may be very beneficial for the fatigue strength. This is the case for areas, which are subject to large static stress variations due to loading and unloading, such as the connection between the hopper plating and the double bottom plating. For such locations, local details with HTS will experience less plastic strains, and the low cycle fatigue strength therefore be increased compared with mild steel details. Nevertheless it should be checked whether wave induced loads are marginal or not.

3.4.4 Typical Corrosion Patterns

In addition to being familiar with typical structural defects likely to be encountered during a survey, it is necessary to be aware of the various forms and possible locations of corrosion that may occur to the structural members on decks and in tanks.

The main types of corrosion patterns, which may be identified, include the following:

(a) General Corrosion

General corrosion appears as non-protective, friable rust, which can occur uniformly on tank internal surfaces that are uncoated. The rust scale continually breaks off, exposing fresh metal to corrosive attack. Thickness loss cannot usually be judged visually until excessive loss has occurred. Failure to remove mill scale during construction of the ship can accelerate corrosion experienced in service. Severe general corrosion in all types of ships, usually characterized by heavy scale accumulation, can lead to extensive steel renewals.

(b) Grooving Corrosion

Grooving corrosion is often found in or beside welds, especially in the heat affected zone. This corrosion is sometimes referred to as 'inline pitting attack' and can also occur on vertical members and flush sides of bulkheads in way of flexing. The corrosion is caused by the galvanic current generated from the difference of the metallographic structure between the heat affected zone and base metal. Coating of the welds is generally less effective compared to other areas due to roughness of the surface, which exacerbates the corrosion. Grooving corrosion may lead to stress concentrations and further accelerate the corrosion process. Grooving corrosion may be found in the base material where coating has been scratched or the metal itself has been mechanically damaged. An example of grooving corrosion is shown in Figure 8.

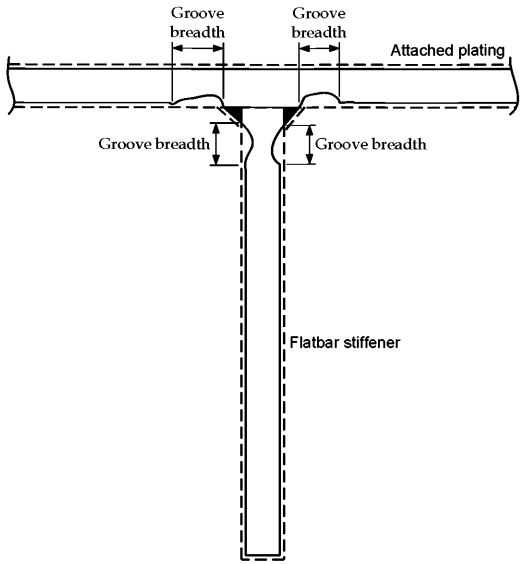

Figure 8 Grooving Corrosion

(c) Pitting Corrosion

Pitting corrosion is a localized corrosion often found in the inner bottom plating or on horizontal surfaces in cargo oil tanks and in the bottom plating of ballast tanks. Pitting corrosion is normally initiated due to local breakdown of coating. For coated surfaces the attack produces deep and relatively small diameter pits that can lead to hull penetration in isolated random places in the tank.

Pitting of uncoated tanks, as it progresses, forms shallow but very wide scabby patches (e.g. 300 mm diameter); the appearance resembles a condition of general corrosion. Severe pitting of uncoated tanks can affect the strength of the structure and lead to extensive steel renewals.

Once pitting corrosion starts, it is exacerbated by the galvanic current between the pit and other metal.

Erosion which is caused by the wearing effect of flowing liquid and abrasion which is caused by mechanical actions may also be responsible for material wastage.

(d) Edge Corrosion

Edge corrosion is defined as local corrosion at the free edges of plates, stiffeners, primary support members and around openings. An example of edge corrosion is shown in Figure 9.

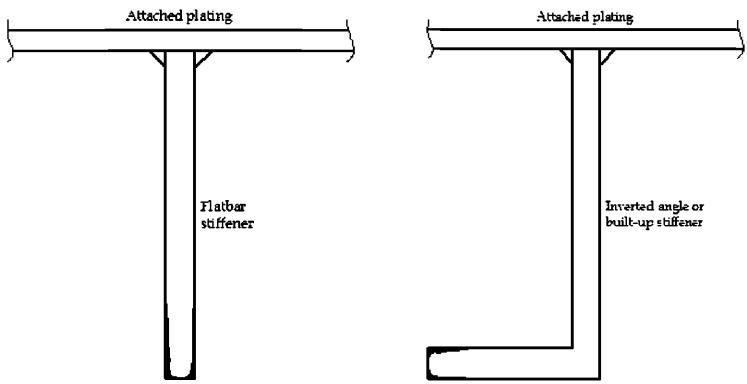

Figure 9 Edge Corrosion

3.4.5 Factors Influencing Corrosion

When corrosion problems occur it is important to have some understanding of the possible contributing factors to the corrosion so that remedial action taken will minimize the possibility of future repetition. The significance of each of these factors will vary depending upon the tank service. Similarly, for ballast tanks the effectiveness of the protection system and high humidity could be major factors. For cargo only tanks the method and frequency of tank washing and the sulphur content of the cargo could be factors of particular significance.

The following is a list of possible factors, which might be relevant in evaluating corrosion patterns being experienced:

(a) Frequency of Tank Washings

Increased frequency of tank washings can increase the corrosion rate of tanks. For uncoated tanks, it is often possible to see lines of corrosion in way of the direct impingement paths of the crude oil washing machines.

(b) Composition and Properties of Cargo

- Carriage of crude oil can result in the tank surfaces in contact with the cargo being coated with a "waxy" or "oily" film, which is retained after cargo discharge. This film can reduce corrosion. Less viscous cargoes such as gasoline do not leave behind a similar film.
- Carriage of crude oil that has high sulphur content can lead to high rates for general corrosion and tank bottom pitting corrosion. By reacting with water many sulphur compounds can form acids, which are very corrosive. This will often mean that water bottom dropping out of the cargo will be acidic and corrosive.
- Carriage of cargoes with high water content can increase corrosion rates.
- Carriage of cargoes with high oxygen content (e.g. gasoline) can lead to high

corrosion rates.

- Carriage of cargoes with low pH values (acidic) can lead to high corrosion rates.

(c) Time in Ballast

- For ballast tanks where the coating has started to fail, corrosion increases with the time in ballast.

(d) Microbial Induced Corrosion

- Microbial influenced corrosion is the combination of the normal galvanic corrosion processes and the microbial metabolism. The presence of microbial metabolites generates corrosive environments, which promote the normal galvanic corrosion.
- For tanks that remain filled with contaminated ballast water for a long time, the potential for microbial induced corrosion, in the form of grooving or pitting, is increased. The microbes could penetrate pinholes and accelerate the coating breakdown and corrosion in the infected areas. Proper procedures, such as flushing with clean (open sea) salt water, will help reduce the potential for this type of corrosion.
- Cargo oil often contains residual water, which may contain microbes leading to microbial induced corrosion attacks in the tank bottom or other locations where the water may collect.
- Biocide shock treatment to exterminate the microbes is a method that could be used in cargo and ballast tanks. In addition clean water flushing at regular intervals will help reduce the potential of microbial induced corrosion. Proper maintenance of coating integrity, or blasting and coating the uncoated surfaces, would be an effective method to deal with microbial induced corrosion.

(e) Humidity of Empty Tank

Empty tanks, e.g. segregated ballast tanks during laden voyages, can have high humidity and are thus susceptible to general atmospheric corrosion, especially if corrosion control is by anodes which are ineffective during these periods.

During prolonged periods, when the tanks are left empty, such as lay-ups, maintenance of low humidity atmosphere in the tanks should be considered to minimise corrosion.

(f) Temperature of Cargo in Adjacent Bunker or Cargo Tanks

Carriage of heated cargoes may lead to increased general corrosion rates at the ballast tank side of a heated cargo tank/unladen ballast tank bulkhead. This may also apply for tanks adjacent to heated bunker tanks.

(g) Coating Breakdown

Intact coatings prevent corrosion of the steel surface.

However:

- A local absence of coating (due to coating depletion, deterioration, damage, etc.) can result in corrosion rates similar or greater than those of unprotected steel.
- Holidays or localized breakdown in coating can lead to pitting corrosion rates higher than for unprotected steel.

Periodic surveys at appropriate intervals and repair of coating as required are effective in minimising corrosion damage.

(h) Locations and Density of Anodes

- Anodes immersed in bottom water can afford protection against bottom corrosion.
- Anodes are not effective in reducing underdeck corrosion rates.
- Properly designed systems with high current densities may afford greater protection against corrosion.
- Electrical isolation or coatings, oily films, etc., on anodes can make anodes inoperative; abnormally low wastage rates of anodes may indicate this condition.

(i) Structural Design of Tank

- High velocity drainage effects can lead to increased erosion in the vicinity of cut-outs and some other structural details for uncoated surfaces.
- Horizontal internals and some details can trap water and lead to higher corrosion rates for uncoated surfaces.
- Less rigid designs, such as decreased scantlings and increased stiffener spacing, may lead to increased corrosion due to flexure effects, causing shedding of scale or loss of coating.
- Sloping tank bottoms (e.g. as with double bottom tanks) to facilitate drainage may reduce bottom corrosion by permitting full stripping of bottom waters.

(j) Gas Inerting

- Decreased oxygen content of ullage due to gas inerting may reduce corrosion of overhead surfaces.
- Sulphur oxides from flue gas inerting can lead to accelerated corrosion due to formation of corrosive sulphuric acid.

(k) Navigational Route

- Solar heating of one side of a ship due to the navigational route can lead to increased corrosion of affected wing tanks.
- Anodes used to protect ballast tanks on voyages of short duration may not be effective due to insufficient anode polarisation period when high corrosion may occur.

(l) Accelerated structural corrosion in water ballast and cargo tanks

A limited but significant number of double hull tankers have been found to be suffering from accelerated corrosion in areas of their cargo and ballast tanks. It is now generally agreed that the "thermos bottle effect", in which heated cargoes retain their loading temperatures for much longer periods, promotes an environment within the cargo and ballast tanks that is more aggressive from the viewpoint of corrosion (as temperatures rise, corrosion activity increases - warm humid salt laden atmospheres in ballast tanks, acidic humid conditions in upper cargo tank vapour spaces and warm water and steel eating microbes on cargo tank bottom areas - all factors which promote corrosion).

If corrosion remains undetected during surveys, loss of tank integrity and oil leakage into the double hull spaces may occur (increased pollution and explosion risk). In the worst cases, corrosion can lead to a major structural failure of the hull.

3.4.6 Items for Special Attention of the Surveyor

Taking into account all the possible factors, which might be relevant to a particular tank, the Surveyor should pay special attention to the following areas when looking for signs of serious corrosion:

- Horizontal surfaces such as bottom plating, face plates and stringers, particularly towards the after end of the structural element. The wastage may take the form of general corrosion or pitting. Accelerated local corrosion often occurs at the after bays and particularly in way of suctions.
- Deck heads and ullage spaces in uncoated ballast or cargo/ballast tanks (where anodes may not be effective) or non-inerted cargo tanks.
- Structure in way of lightening holes or cut-outs where accelerated corrosion may be experienced due to erosion caused by local drainage and flow patterns. Grooving may also take place on both horizontal and vertical surfaces.
- Areas in way of stress concentrations such as at toes of brackets, ends of stiffeners and around openings.
- Surfaces close to high pressure washing units where localised wastage may occur due to direct jet impingement.
- Bulkhead surfaces in ballast tanks adjacent to heated cargo or bunkers.
- Areas in way of local coating breakdown.
- One of the most effective means for preventing corrosion is to protect the hull structure with an efficient coating system. In double hulled tankers, the spaces most at risk from the effects of corrosion are the seawater ballast tanks and the underdeck structure and bottom areas within the cargo oil tanks.

3.4.7 Corrosion Trends in Tank Spaces

Depending on the tank function and location in the tank, some structural components are more susceptible to corrosion than others.

The following are some phenomena of corrosion observed in each type of tank space:

(a) Water Ballast Tank

- Necking occurs at the junction of the longitudinal bulkhead plating and longitudinals. The deflection of the bulkhead plating and longitudinals due to reverse, cyclic loading from cargo oil and water ballast plus the accumulated mixtures of water, mud and scale at their junctures accelerates the corrosion rate. As the steel thins and weakens, the flexing consequently increases and hence corrosion accelerates (see Figure 10). The similar necking effect could also occur in the transverse bulkhead plating and stiffeners, or in the inner bottom plating and longitudinals inside the double bottom space. In the coated water ballast tanks, the plating is the principally affected area due to local corrosion in way of coating failure.
- Corrosion reduces not only the strength capability but also the stiffness (to resist the deflection) of the structural components as corrosion progresses during tanker ageing. The deflection tends to crack the hard scale formation on the steel surface and to expose the fresh steel to the water. Since the loading on corroded structural components remains unchanged, as the structure becomes weaker, the deflection becomes larger and the corrosion rate accelerates.
- For partially filled ballast tanks, the water level is constantly surging in the splash zone due to the ship motions. This accelerates coating breakdown in coated ballast tanks.
- If the intake ballast water is contaminated, the lower part of the ballast tank and bottom plating in particular, might be subjected to microbial influenced corrosion, particularly in the stagnant zone due to poor drainage and mud accumulation. The by-products released by the growing sulphate reducing bacteria can be acidic, which may penetrate and destroy coating, leading to accelerated corrosion in the infected areas.

(b) Cargo Oil Tanks

Residual water settling out from cargo oil can cause the pitting and grooving corrosion in the upper surface of horizontal structural components particularly on the inner bottom plating at the aft end of tanks where water accumulates due to the ship's normal trimming by the stern. In cases where the inner bottom plating has been protected with a hard coating, local breakdown of this barrier coating can lead to accelerated pitting corrosion where residual water has been lying.

Pitting corrosion to the inner bottom plating within cargo tanks can lead to cargo leakage into the double bottom spaces (giving increased risk of explosion and pollution during ballasting operations) whilst corrosion to the under deck structure within the cargo tank area can lead to a reduction in longitudinal strength which gives rise to the possibility of a more serious structural failure occurring.

One of the best methods of preventing corrosion within these spaces is that protective coatings be applied to the underdeck and inner bottom plating areas. In addition to

protecting the steel structure in these areas, this measure would also enable easier and more effective surveys and surveys to be carried out 'in service'.

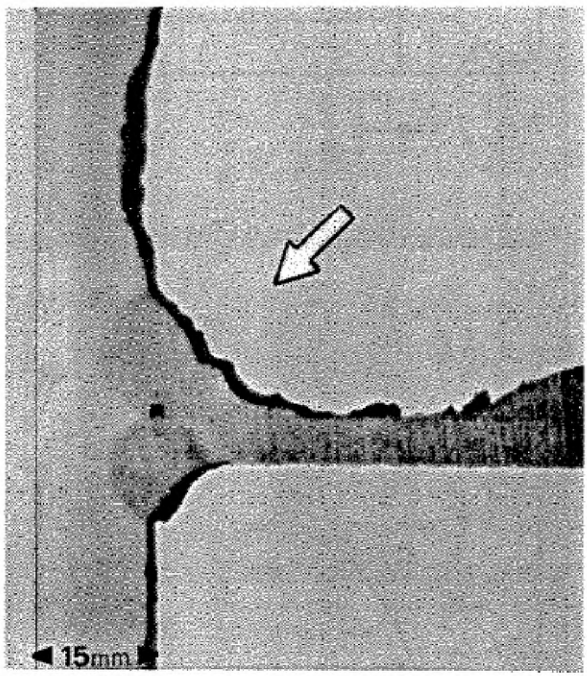

Figure 10 Detail of Necking Effect

3.4.8 In-Service Corrosion Rates

Since each tanker has a different corrosion control system, and is engaged in different trades, it usually has its own unique corrosion characteristics and its own corrosion rates.

3.4.9 Corrosion Prevention Systems

An understanding of the various options which are available to help prevent corrosion and also the limitations of each different system will assist the Surveyor in anticipating possible areas where corrosion problems may occur and thereby help to determine what remedial action may be taken to reduce the effects on structural deterioration.

If serious corrosion has already occurred, steel renewals may not be the only option available to maintain structural integrity. Installation or upgrading of a corrosion prevention system may be more attractive if the steel is within allowable loss limits.

For all types of tanker structures, the main areas, which are usually prone to severe corrosion, will be those in direct contact with seawater, such as water ballast tanks,

external hull and main deck areas. In the case of cargo oil tanks, the corrosion prevention requirements are different for crude oil or white oil products, where the latter usually requires full protection of the internal surfaces with a coating system that will be compatible with the cargo being carried and whose main function is to prevent contamination between different grades.

In general, the most common form of corrosion prevention system used in tanker structures will be the application of paint (hard) coatings to either internal or external steel works in various forms to suit the type and extent of prevention required. The basic function of a hard coating, such as paint, is to block access of water and oxygen to the steel structure itself. It follows therefore that its contact with the steel should be as good as practically achievable, i.e. it must be firmly adherent, otherwise there will always be a possibility that rust - hydrated iron oxide - will form beneath the paint and eventually rupture the paint film.

Maintaining this corrosion prevention system throughout the lifespan of the vessel is therefore an important feature in the initial choice of materials and will also be a measure of the continuing structural integrity of the vessel itself.

Potential corrosion of the internal structure in water ballast tanks is by far the most serious aspect of tanker maintenance and the prevention systems normally associated with these spaces can generally be grouped under three categories, i.e.

- Hard coatings (epoxy, vinyl, zinc silicate, bitumastic, etc.);
- Soft Coatings;
- Cathodic protection (zinc/aluminium anodes) (Note: Not subject to Classification Surveys).

The following text gives a brief description of each type of system but is not intended as an exhaustive evaluation.

(a) Hard Coatings

The very nature of this form of corrosion prevention system is to form a protective barrier on the steel surface, which will provide a semi-permeable membrane to protect against the elements of corrosion. Any subsequent breakdown of this 'barrier' will, however, allow the normal corrosion process to take place, and usually at a much more accelerated rate due to the limited surface area being exposed.

This problem is, therefore, very similar to that of local pitting corrosion, where, if early action is not taken, the overall integrity of the structure will be put at risk.

Further increases in the extent of breakdown of this 'barrier' will, however, reach a stage where the system is no longer considered effective and general corrosion of the structure is taking place.

If properly applied on blast-cleaned surfaces, recognised coating types, such as those on an epoxy basis, should obtain a durability of at least 10 years service life.

Sacrificial type coatings such as inorganic zinc provide 'metal' that is anodic to the steel surface and will protect the steel cathodically.

(b) Soft Coatings

The effectiveness of these types of protective coatings is usually much more difficult to judge, especially those relying on chemical reactions with the steel surface.

By their very nature, the effective life of some of the protection systems is usually restricted to about one to three years only, before further maintenance and touch-up is required. Visual assessment of their existing condition can also be very difficult and somewhat misleading, especially if these have been used to cover-up already severely corroded areas of the structure.

Other typical problems that have been found with the use of soft coatings for ballast tank protection have been in respect to:

- Their 'greasy' nature, which makes physical survey very difficult, and may adversely impact safety.
- Their 'oily' base, which can contaminate the discharge of ballast water.
- Potential sagging of thick coatings attached to hot surfaces.
- Some vegetable based coatings are incompatible with sacrificial anodes.
- When exposed to mineral oil, some lanolin-based coatings go into an emulsion state requiring removal for hot-work or pollution risk.
- Soft coatings on horizontal surfaces will be damaged whenever any mucking out of sediment is carried out in the ballast tank.
- In the event of hot-work/welding on the outside or inside of coated plates, careful removal of the soft coating is necessary to prevent the risk of fires or explosions due to the potential build-up of gas when the coating is heated.

Much of the success with these soft coatings has usually been in connection with void spaces or water ballast tanks where there is a long retention time of the ballast (as in semi-submersibles). However, regular changes of ballast water, as in tanker operations, has the effect of depleting the amount of soft protection on the internal surfaces. For this reason, these protection systems should really be regarded as temporary and should be subjected to more regular and comprehensive thickness gauging and close-up surveys than that considered for hard coatings.

(c) Cathodic Protection (Sacrificial Anodes)

The principle of cathodic protection is to sacrifice the anodes in preference to the surrounding steel structures, and, therefore, relies entirely on these areas being

immersed in seawater before this action can take place.

Anode material is generally zinc. Other types of materials, for example aluminium, are limited because of the danger of sparks when dropped or struck, although these materials do offer better current output for the same weight. The use of anodes of aluminium have an installation height restriction in cargo tanks equivalent to a potential energy of 275 Joules which effectively limits their use to bottom structure and requires that falling objects do not strike them.

The consumption rates and replacement of depleted anodes will not always be a true indication of the effectiveness of the corrosion protection system. Only regular and comprehensive visual and gauging surveys of the structure will give a correct assessment of effectiveness. Sacrificial anodes used as backup protection to a hard coating system do, however, have the benefit of controlling the accelerated rates of corrosion in way of any breakdown, but, again will only be effective when immersed in seawater. Recoating of any breakdown areas may still be required, but probably at a later date than without these back-up anodes.

(d) Selection of Corrosion Prevention System

The choice of Corrosion Prevention systems for water ballast tanks has, in the past, been determined by either the Shipowner or Shipbuilder. IACS UR Z8 requires coating in ballast tanks on new vessels. The continued effectiveness of these corrosion prevention systems must be monitored throughout the service life of the ship by regular assessment of the condition of the steel structure, which is being protected.

For hard coating prevention systems applied at new building, this thickness determination need only be monitored in way of any localised breakdown where accelerated corrosion of the exposed steel structure may be anticipated.

With soft coatings, semi-hard coatings or sacrificial anodes, more frequent and extensive gauging surveys will be needed to assess the overall wastage rates in these tanks, and will generally be more difficult to survey in the later stages of the ship's service life.

In view of the importance of preserving this structural integrity, effective maintenance programs should be set up from commencement of service to repair and replace the corrosion prevention system as it deteriorates.

3.4.10 Fractures

In most cases fractures are found at locations where stress concentration occurs. Weld defects, flaws, and where lifting fittings used during ship construction are not properly removed are often areas where fractures are found. If fractures occur under repeated stresses, which are below the yielding stress, the fractures are called fatigue fractures. In addition to the cyclic stresses induced by wave forces, fatigue fractures can also result from vibration forces introduced by main engine(s) or propeller(s), especially in the aft

part of the hull.

Some fractures may not be readily visible due to lack of cleanliness, difficulty of access, poor lighting or compression of the fracture surfaces at the time of survey. It is therefore important to identify and closely inspect potential problem areas. Fractures will normally initiate at notches, stress concentrations or welds especially those with defects. Where these initiation points are not apparent on one side, the structure on the other side of the plating should be surveyed.

Fracture initiating at latent defects in welds more commonly appears at the beginning or end of a run of welds, or rounding corners at the end of a stiffener, or at an intersection. Special attention should be paid to welds at toes of brackets, at cut-outs, and at intersections of welds. Fractures may also be initiated by undercutting the weld in way of stress concentrations.

It should be noted that fractures, particularly fatigue fractures due to repeated stresses, may lead to serious damages, e.g. a fatigue fracture in a side shell longitudinal may propagate into shell plating and affect the watertight integrity of the hull.

3.4.11 Deformations

Deformation of structure is caused by in-plane load, out-of-plane load or combined loads. Such deformation is often identified as local deformation, i.e. deformation of panel or stiffener, or global deformation, i.e. deformation of beam, frame, girder or floor, including associated plating.

If in the process of the deformation large deformation is caused due to small increase of the load, the process is called buckling.

Deformations are often caused by impact loads/contact and inadvertent overloading. Damages due to bottom slamming and wave impact forces are, in general, found in the forward part of the hull, although stern seas (pooping) have resulted in damages in way of the aft part of the hull.

In the case of damages due to contact with other objects, special attention should be drawn to the fact that although damages to the shell plating may look small from the outboard side, in many cases the internal members are heavily damaged and the coating effectiveness compromised.

Permanent buckling may arise as a result of overloading, overall reduction in thickness due to corrosion, or contact damage. Elastic buckling will not normally be directly obvious but may be detected by evidence of coating damage, stress lines or shedding of scale. Buckling damages are often found in webs of web frames or floors. In many cases, this may be attributed to corrosion of webs/floors, wide stiffener spacing or wrongly positioned lightening holes, man-holes or slots in webs/floors.

3.5 Structural detail failures and repairs

3.5.1 For examples of structural defects, which have occurred in service, attention is

drawn to Chapter **5** of these guidelines. It is suggested that Surveyors should be familiar with the contents of Chapter **5** before undertaking a survey.

3.5.2 For Classification requirements related to prompt and thorough repairs refer to **2.6.1**.

3.5.3 In general, where part of the structure has deteriorated to the permissible minimum thickness, then the affected area is to be cropped and renewed. Generally doubler plates should not be used for the compensation of wasted plate. Repair work in tanks requires careful planning in terms of accessibility. Refer to Part B of IACS Recommendation 47, Shipbuilding and Repair Quality Standard.

3.5.4 If replacement of defective parts must be postponed, temporary measures may be acceptable at the Surveyor's discretion and a suitable condition of class will be imposed.

4 Survey programme, preparation and execution

4.1 General

4.1.1 The owner should be aware of the scope of the coming survey and instruct those who are responsible, such as the master or the superintendent, to prepare necessary arrangements. If there is any doubt, the Classification Society concerned should be consulted.

4.1.2 Survey execution will naturally be heavily influenced by the type of survey to be carried out. The scope of survey will have to be determined prior to the execution.

4.1.3 The Surveyor should study the ship's structural arrangements and review the ship's operation and survey history and those of sister ships where possible, to identify any known potential problem areas particular to the type of ships. Sketches of typical structural elements should be prepared in advance so that any defects and/or ultrasonic thickness measurements can be recorded rapidly and accurately.

4.2 Survey Programme

4.2.1 The Owner in co-operation with the Classification Society is to work out a specific Survey Programme prior to commencement of any part of:

- the Special Survey;
- the Intermediate Survey for oil tankers over 10 years of age.

4.2.2 The Survey Programme is to be in a written format. The Survey programme at Intermediate Survey may consist of the Survey Programme at the previous Special Survey supplemented by the Executive Hull Summary of that Special Survey and later relevant survey reports.

The Survey Program is to be worked out taking into account any amendments to the survey requirements implemented after the last Special Survey carried out.

4.2.3 The Survey Programme should account for and comply with the requirements for close-up examinations, thickness measurements and tank testing, and take into consideration the conditions for survey, access to structures, cleanliness and illumination of tanks, and equipment for survey, respectively, and is to include relevant information including at least:

- basic ship information and particulars;
- main structural plans (scantling drawings), including information regarding the use of high tensile steels (HTS);
- plan of tanks;
- list of tanks with information on use, corrosion prevention and condition of coating;

- conditions for survey (e.g., information regarding tank cleaning, gas freeing, ventilation, lighting, etc.);
- provisions and methods for access to structures;
- equipment for surveys;
- nomination of tanks and areas for close-up survey;
- nominations of sections for thickness measurement;
- nomination of tanks for tank testing;
- damage experience related to the ship in question.

4.2.4 In developing the Survey Programme, the following documentation is to be collected and consulted with a view to selecting tanks, areas, and structural elements to be examined:

- survey status and basic ship information;
- documentation on-board, as described in 4.10;
- main structural plans (scantlings drawings), including information regarding the use of high tensile steels (HTS);
- relevant previous survey and inspection reports from both Classification Society and the Owner;
- information regarding the use of the ship's tanks, typical cargoes and other relevant data;
- information regarding corrosion prevention level on the new-building;
- information regarding the relevant maintenance level during operation.

4.2.5 In developing the Survey Programme, the Classification Society will advise the Owner of the maximum acceptable structural corrosion diminution levels applicable to the vessel.

4.2.6 Minimum requirements regarding close-up surveys and thickness measurements are stipulated in IACS Unified Requirement Z10.4.

4.3 Survey Planning Meeting

4.3.1 Prior to the commencement of any part of the Special Survey and Intermediate Survey a survey planning meeting is to be held between the attending Surveyor(s), the Owner's Representative in attendance and the TM company representative, where involved.

4.4 Conditions for survey

4.4.1 The owner is to provide the necessary facilities for a safe execution of the survey.

4.4.2 Tanks and spaces are to be safe for access, i.e. gas freed, ventilated and illuminated.

4.4.3 In preparation for survey and thickness measurements and to allow for a thorough examination, all spaces are to be cleaned including removal from surfaces of all loose accumulated corrosion scale. Spaces are to be sufficiently clean and free from water, scale, dirt, oil residues, etc. to reveal corrosion, deformation, fractures, damages, or other structural deterioration. However, those areas of structure whose renewal has already been decided by the owner need only be cleaned and descaled to the extent necessary to determine the extent of the areas to be renewed.

4.4.4 Sufficient illumination is to be provided to reveal significant corrosion, deformation, fractures, damages or other structural deterioration.

4.5 Access Arrangements and Safety

4.5.1 In accordance with the intended survey, measures are to be provided to enable the hull structure to be surveyed and thickness measurement carried out in a safe and practical way.

4.5.2 For close-up surveys in a cargo tank and ballast tanks, one or more of the following means for access, acceptable to the Surveyor, are to be discussed in the planning stage and provided:

a) permanent staging and passages through structures;
b) temporary staging, e.g. ladders and passages through structures;
c) lifts and movable platforms;
d) boats or rafts; and
e) other equivalent means.

4.5.3 In addition, particular attention should be given to the following guidance:

(a) Prior to entering tanks and other closed spaces, e.g. chain lockers, void spaces, it is necessary to ensure that the oxygen content has been tested and confirmed as safe. A responsible member of the crew should remain at the entrance to the space and if possible communication links should be established with both the bridge and engine room. Adequate lighting should be provided in addition to a hand held torch (flashlight).

(b) In tanks where the structure has been coated and recently de-ballasted, a thin slippery film may often remain on the surfaces. Care should be taken when inspecting such spaces.

(c) The removal of scale may be extremely difficult. The removal of scale by hammering may cause sheet scale to fall, and in cargo tanks this may result in residues of cargo falling from above. When using a chipping or scaling hammer care should be taken to protect eyes, and where possible safety glasses should be worn. If the structure is heavily scaled then it may be necessary to request de-scaling before conducting a satisfactory visual examination.

(d) When entering a cargo or ballast tank the access ladders and permanent access if fitted should be examined prior to being used to ensure that they are in good condition and rungs/platforms are not missing or loose. One person at a time should descend or ascend the ladder.

(e) If a portable ladder is used for survey purposes, the ladder should be in good

condition and fitted with adjustable feet, to prevent it from slipping. Refer to IACS Recommendation 78, Safe Use of Portable Ladders for Close-Up Surveys.

(f) Staging is the most common means of access provided especially where repairs or renewals are being carried out. It should always be correctly supported and fitted with handrails. Planks should be free from splits and lashed down. Staging erected hastily by inexperienced personnel should be avoided.

(g) In double bottom tanks there will often be a build up of mud on the bottom of the tank and this should be removed, in particular in way of tank boundaries, suction and sounding pipes, to enable a clear assessment of the structural condition.

(h) For ships built in compliance with SOLAS 74 (as amended) Regulation II-1/3-6, the approved ship structure access manual should be consulted before the survey.

4.5.6 Ventilation and Inerting Requirements for Double Hull Spaces

Due to the cellular construction of the double hull tanker, proper means of ventilation should be provided to avoid the accumulation of noxious or flammable gases, and to ensure a continuous safe environment for inspection and maintenance. It is also necessary to provide means of inerting and purging ballast tanks in the event of oil leak or hydrocarbon gas presence.

The most common method to provide a safe condition for personnel entry into double hull water ballast tanks is by ballasting and subsequently emptying the tank, thus allowing fresh air to fill all cellular compartments. However, this method may not be feasible during cargo laden voyages due to loadline, longitudinal strength and local strength limitations.

Conventional Tank Ventilation Method

Conventional means of tank ventilation and gas freeing by blowing fresh air through deck openings is effective for vertical side tanks and "U" shaped ballast tanks, but it is inadequate for "L" or "J" shaped ballast tanks

Ventilation by Ballast Pipe

One method of ballast tank venting and gas freeing is to supply fresh air through the ballast piping system. The inert gas fan can be used for the gas freeing operation. However, a separate ventilation fan should be provided to supply the fresh air for tank entry. This method has a significant drawback during cargo loading and discharging operations, since the ballast piping will be needed for ballast transfer, and will not be available for venting and gas freeing.

Ventilation by Purge Pipe

Another method of ballast tank venting and gas freeing is the use of portable gas freeing fans mounted on top of purge pipes to remove air from double bottom spaces. The fresh air is pulled down into the tank through open tank hatches on deck. Each purge pipe should extend from the upper deck to the double bottom space, and be lead inboard to the ship's centreline. This method is most effective for "L" or "J" shaped ballast tanks to allow fresh air to reach every corner in the double bottom space.

Inerting by Deck Inert Gas Lines

A method of inerting ballast tanks is to supply the inert gas by portable flexible ducts from the inert gas main lines on deck through access hatches and/or tank cleaning hatches. Alternatively, fixed gas deck branch lines may be installed. The tank atmosphere changing methods will be identical as for venting and gas freeing. Purge pipes will be needed for "L" and "J" shaped ballast tanks.

4.6 Use of Boats or Rafts

4.6.1 A communication system is to be arranged between the survey party in the tank and the responsible officer on deck. This system must also include the personnel in charge of ballast pump handling.

4.6.2 Explosimeter, oxygen-meter, breathing apparatus, lifeline and whistles are to be at hand during the survey. When boats or rafts are used, appropriate life jackets are to be available for all participants. Boats or rafts are to have satisfactory residual buoyancy and stability even if one chamber is ruptured. A safety checklist is to be provided.

4.6.3 Surveys of tanks by means of boats or rafts may only be undertaken at the sole discretion of the Surveyor, who is to take into account the safety arrangements provided, including weather forecasting and ship response under foreseeable conditions and provided the expected rise of water within the tank does not exceed 0.25 metres.

4.6.4 Rafts or boats alone may be allowed for survey of the under deck areas for tanks or spaces, if the depth of the webs is 1.5 m or less.

If the depth of the webs is more than 1.5 m, rafts or boats alone may be allowed only:

.1 when the coating of the under deck structure is in GOOD condition and there is no evidence of wastage; or

.2 if a permanent means of access is provided in each bay to allow safe entry and exit. This means:

- .1 access direct from the deck via a vertical ladder and a small platform fitted approximately 2 m below the deck in each bay; or
- .2 access to deck from a longitudinal permanent platform having ladders to deck in each end of the tank. The platform shall, for the full length of the tank, be arranged in level with, or above, the maximum water level needed for rafting of under deck structure. For this purpose, the ullage corresponding to the maximum water level is to be assumed not more than 3m from the deck plate measured at the midspan of deck transverses and in the middle length of the tank. See Figure 11.

If neither of the above conditions are met, then staging or an "other equivalent means" is

to be provided for the survey of the under deck areas.

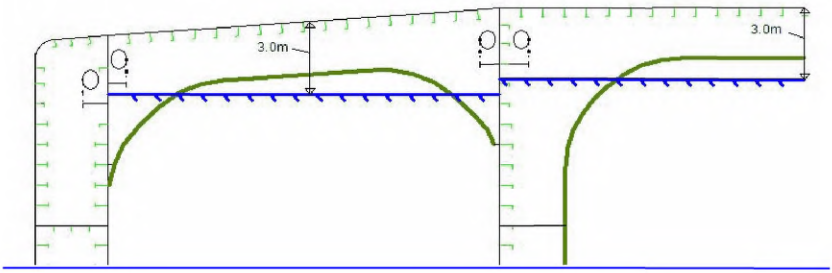

Figure 11

The use of rafts or boats alone does not preclude the use of boats or rafts to move about within a tank during a survey.

Reference is made to IACS Recommendation 39 - Guidelines for the Safe Use of Rafts or Boats for Close-up surveys.

4.7 Personal equipment

4.7.1 The following protective clothing and equipment to be worn as applicable during the surveys:

(a) Working clothes: Working clothes should be of a low flammability type and be easily visible.

(b) Head protection: Hard hat (metal hats are not allowed) shall always be worn outside office buildings/unit accommodations.

(c) Hand and arm protection: Various types of gloves are available for use, and these should be used during all types of surveys. Rubber/plastic gloves may be necessary when working in cargo tanks.

(d) Foot protection: Safety shoes or boots with steel toe caps and non slip soles shall always be worn outside office buildings/unit accommodations. Special footwear may be necessary on slippery surfaces or in areas with chemical residues.

(e) Ear protection: Ear muffs or ear plugs are available and should be used when working in noisy areas. As a general rule, you need ear protection if you have to shout to make yourself understood by someone standing close to you.

(f) Eye protection: Goggles should always be used when there is danger of getting solid particles or dust into the eyes. Protection against welding arc flashes and ultraviolet light should also be considered.

(g) Breathing protection: Dust masks shall be used for protection against the breathing of harmful dusts, paint spraying and sand blasting. Gas masks and filters should be used by personnel working for short periods in an atmosphere polluted by gases or vapour.
(Self-contained breathing apparatus: Surveyors shall not enter spaces where such equipment is necessary due to unsafe atmosphere. Only those who are specially

trained and familiar with such equipment should use it and only in case of emergency).

(h) Lifejacket: Recommended to be used when embarking/disembarking ships offshore from/to pilot boat.

4.7.2 The following survey equipment is to be used as applicable during the surveys:

(a) Torches: Torches (Flashlights) approved by a competent authority for use in a flammable atmosphere shall be used in gas dangerous areas. High intensity beam type is recommended for in-tank surveys. Torches are recommended to be fitted with suitable straps so that both hands may be free.

(b) Hammer: In addition to its normal purposes the hammer is recommended for use during surveys inside tanks etc. as it may be most useful for the purpose of giving distress signal in case of emergency.

(c) Oxygen analyser/Multigas detector: For verification of acceptable atmosphere prior to tank entry, pocket size instruments which give audible alarm when unacceptable limits are reached are recommended. Such equipment shall have been approved by national authorities.

(d) Safety belts and lines: Safety belts and lines should be worn where high risk of falling down from more than 3 metres is present.

4.8 Thickness measurement and fracture detection

4.8.1 Thickness measurement is to comply with the requirements of the Classification Society concerned. Thickness measurement should be carried out at points that adequately represent the nature and extent of any corrosion or wastage of the respective structure (plate, web, etc.). Thickness measurements of structures in areas where close-up surveys are required shall be carried out simultaneously with the close-up surveys.

4.8.2 Thickness measurement is normally carried out by means of ultrasonic test equipment. The accuracy of the equipment is to be proven as required.

4.8.3 Thickness measurements required, if not carried out by the Society itself are to be witnessed by a Surveyor on board to the extent necessary to control the process.

4.8.4 A thickness measurement report is to be prepared. The report is to give the location of measurements, the thickness measured as well as corresponding original thickness. Furthermore, the report is to give the date when the measurements were carried out, type of measurement equipment, names of personnel and their qualifications and has to be signed by the operator. Upon completion of the thickness measurements onboard, the Surveyor should verify and keep a copy of the preliminary thickness measurement report signed by the operator until such time as the final report is received. The Surveyor is to review the final thickness measurement report and countersign the cover sheet.

4.8.5 The thickness measurement company should be part of the survey planning meeting to be held prior to the survey.

4.8.6 One or more of the following fracture detection procedures may be required if deemed necessary and should be operated by experienced qualified technicians:

(a) radiographic equipment
(b) ultrasonic equipment
(c) magnetic particle equipment
(d) dye penetrant

4.9 Survey at sea or at anchorage

4.9.1 Voyage surveys may be accepted provided the survey party is given the necessary assistance from the shipboard personnel. The necessary precautions and procedures for carrying out the survey are to be in accordance with **4.1** to **4.8** inclusive. Ballast, cargo and inert gas piping systems must be secured at all times during tank surveys.

4.9.2 A communication system is to be arranged between the survey party in the spaces under examination and the responsible officer on deck.

4.10 Documentation on board

4.10.1 The following documentation is to be placed on board and maintained and updated by the owner for the life of ship in order to be readily available for the survey party.

4.10.2 Survey Report File: This file includes Reports of Structural Surveys, Executive Hull Summary and Thickness Measurement Reports.

4.10.3 Supporting Documents: The following additional documentation is to be placed on board, including any other information that will assist in identifying Suspect Areas requiring examination:

- Survey Programme as required by **4.2** until such time as the Special Survey or Intermediate Survey, as applicable, has been completed;
- main structural plans of cargo and ballast tanks;
- previous repair history;
- cargo and ballast history;
- extent of use of inert gas plant and tank cleaning procedures;
- surveys by ship's personnel;
- structural deterioration in general;
- leakage in bulkheads and piping;
- condition of coating or corrosion prevention system, if any;
- any other information that will help identify Suspect Areas requiring survey.

4.10.4 Prior to survey, the completeness of the documentation onboard, and its contents as a basis for the survey should be examined.

4.11 Reporting and Evaluation of Survey

4.11.1 The data and information on the structural condition of the vessel collected during the survey is to be evaluated for acceptability and continued structural integrity of the vessel.

4.11.2 In case of oil tankers of 130 m in length and upwards (as defined in the International Convention on Load Lines in force), the ship's longitudinal strength is to be evaluated by using the thickness of structural members measured, renewed and reinforced, as appropriate, during the special survey carried out after the ship reached 10 years of age in accordance with the criteria for longitudinal strength of the ship's hull girder for oil tankers.

4.11.3 The final result of evaluation of the ship's longitudinal strength required in 4.11.2, after renewal or reinforcement work of structural members, if carried out as a result of initial evaluation, is to be reported as a part of the Executive Hull Summary.

4.11.4 As a principle, for oil tankers subject to ESP, the Classification Society Surveyor is to include the following content in his report for survey of hull structure and piping systems, as relevant for the survey.

.1 General

1.1 A survey report is to be generated in the following cases:

- In connection with commencement, continuation and / or completion of periodical hull surveys, i.e. annual, intermediate and special surveys, as relevant.
- When structural damages / defects have been found.
- When repairs, renewals or modifications have been carried out.
- When condition of class (recommendation) has been imposed or deleted.

1.2 The purpose of reporting is to provide:

- Evidence that prescribed surveys have been carried out in accordance with applicable classification rules.
- Documentation of surveys carried out with findings, repairs carried out and condition of class (recommendation) imposed or deleted.
- Survey records, including actions taken, which shall form an auditable documentary trail. Survey reports are to be kept in the survey report file required to be on board.
- Information for planning of future surveys.
- Information which may be used as input for maintenance of classification rules and instructions.

.2 Extent of Survey

The extent of the survey in the report is to include the following:

- Identification of compartments where an overall survey has been carried out.
- Identification of locations, in each tank, where a close-up survey has been carried out, together with information of the means of access used.
- Identification of locations, in each tank, where thickness measurement has been carried out.
- For areas in tanks where protective coating is found to be in GOOD condition and the extent of close-up survey and / or thickness measurement has been specially considered, structures subject to special consideration are to be identified.
- Identification of tanks subject to tank testing.
- Identification of cargo piping on deck, including crude oil washing (COW) piping, and cargo and ballast piping within cargo and ballast tanks, pump rooms, pipe tunnels and void spaces, examined and where operational test to working pressure has been carried out.

.3 Result of the survey

Type, extent and condition of protective coating in each tank, as relevant (rated GOOD, FAIR or POOR).

Structural condition of each compartment with information on the following, as relevant:

Identification of findings, such as:

- Corrosion with description of location, type and extent;
- Areas with substantial corrosion;
- Cracks / fractures with description of location and extent;
- Buckling with description of location and extent;
- Indents with description of location and extent;
- Identification of compartments where no structural damages/defects are found.

The report may be supplemented by sketches/photos.

Evaluation result of longitudinal strength of the hull girder of oil tankers of 130 m in length and upwards and over 10 years of age. The following data is to be included, as relevant:

- Measured and as-built transverse sectional areas of deck and bottom flanges;
- Diminution of transverse sectional areas of deck and bottom flanges;
- Calculation of the transverse section modulus of hull girder, as relevant;
- Details of renewals or reinforcements carried out, as relevant (as per 4.2).

.4 Actions taken with respect to findings

Whenever the attending Surveyor is of the opinion that repairs are required, each item to be repaired is to be identified in a numbered list. Whenever repairs are

carried out, details of the repairs effected are to be reported by making specific reference to relevant items in the numbered list.

Repairs carried out are to be reported with identification of:

- Compartment
- Structural member
- Repair method (i.e. renewal or modification)
- Repair extent
- NDT / Tests

For repairs not completed at the time of survey, condition of class (recommendation) is to be imposed with a specific time limit for the repairs. In order to provide correct and proper information to the Surveyor attending for survey of the repairs, condition of class (recommendation) is to be sufficiently detailed with identification of each item to be repaired.

For identification of extensive repairs, reference may be given to the survey report.

4.11.5 An Executive Hull Summary of the survey and results is to be issued to the Owner and placed on board the vessel for reference at future surveys. The Executive Hull Summary is to be endorsed by the Classification Society's head office or regional managerial office.

5 Structural detail failures and repairs

5.1 General

5.1.1 The catalogue of structural detail failures and repairs contained in this section of the Guidelines collates data supplied by the IACS Member Societies and is intended to provide guidance when considering similar cases of damage and failure. The proposed repairs reflect the experience of the Surveyors of the Member Societies, but it is realized that other satisfactory alternative methods of repair may be available. However, in each case the repairs are to be completed to the satisfaction of the Classification Society Surveyor concerned. Identified reoccurring failures after repairs may require further investigation.

5.2 Actions to be taken by the Classification Society when Fatigue Failures have been Identified

5.2.1 Whenever a fatigue failure has been identified on a ship a detailed structural survey with close-up examination of similar locations on that ship should be carried out.

5.2.2 Assessment of fatigue failures should be carried out by the Classification Society when fatigue failures are identified in the cargo area in the following cases:

a. Ships 5 years of age and less.
b. Ships 10 years of age and less when the fatigue failure occurs in the structural details, which are present in a large number onboard the ship or when the fatigue failure may have serious consequences.
c. When similar fatigue failures have been identified on sister ships 10 years of age and less.

In ships more than 10 years of age fatigue failure assessment may be waived at the discretion of the Classification Society.

5.2.3 Assessment of fatigue failure implies structural analysis to be carried out with a scope of:

a. The possible cause of failure;
b. The need for proactive repairs, reinforcements and/or modifications;
c. The most effective and practical repair;
d. The need for detailed structural surveys on sister/similar ships as defined in IACS Procedural Requirement No. 2.

The structural analysis may be carried out by means of simple beam or finite element analysis.

5.2.4 The proactive measures identified in the structural assessment are to be carried out to the satisfaction of the Classification Society.

5.2.5 If applicable the requirements of IACS Procedural Requirement PR 2, "Procedure for Failure Incident Reporting and Early Warning of Serious Failure Incidents – IACS Early Warning Scheme- EWS" are to be applied.

5.3 Catalogue of structural detail failures and repairs

5.3.1 The catalogue has been sub-divided into groups to be given particular attention during the surveys:

Group No.	Description of Structural Group
1	Bilge Hopper
2	Wing Ballast Tank
3	Bottom Ballast Tank
4	Web Frames in Cargo Tanks
5	Transverse Bulkheads in Cargo Tank
6	Deck Structure
7	Fore and Aft End Regions
8	Machinery and Accommodation Spaces

Group 1 Bilge Hopper

Contents

1 General

2 What to look for – Bilge Hopper Plating survey
2.1 Material wastage
2.2 Deformations
2.3 Fractures

3 What to look for - Hopper Tank survey
3.1 Material wastage
3.2 Deformations
3.3 Fractures

4 What to look for - External bottom survey
4.1 Material wastage
4.2 Deformations
4.3 Fractures

5 General comments on repair
5.1 Material wastage
5.2 Deformations
5.3 Fractures

Examples of structural detail failures and repairs – Group 1

Example No.	Title
1	Fracture on the inner bottom plating at the connection of hopper plate to inner bottom
2	Fracture at connection of bilge hopper plate and inner bottom
3	Fracture at connection of bilge hopper plate and inner bottom
4	Fracture at connection of bilge hopper plate and inner bottom
5	Fractured floor and inner bottom plate in way of juncture of inner bottom to hopper plate
6	Fracture at connection of bilge hopper plate and web frame
7	Rounded hopper plate deformation in way of the floor
8	Fracture at the connection of hopper plate to outside longitudinal bulkhead
9	Fracture in gusset plate in line with inner bottom
10	Fracture in way of cut-out in hopper plate

1 General

1.1 The bilge hopper together with the double bottom and double side tanks and spaces, protect the cargo tanks or spaces, and are not to be used for the carriage of oil cargoes.

1.2 In addition to general corrosion, the welds and connections of the tank top/hopper sloping plating may be prone to fatigue.

1.3 The bilge hopper contributes to the longitudinal hull girder strength and supports the double bottom and double side construction.

1.4 Weld defects and/or misalignment between hopper plate, inner bottom and longitudinal girder may lead to problems in view of the stress concentrations at this juncture. This may also be the case at the upper end of the hopper plate connection with the inner hull longitudinal bulkhead and horizontal girder.

2 What to look for – Bilge Hopper Plating survey

2.1 Material wastage

2.1.1 The general corrosion condition of the bilge hopper structure may be observed by visual survey. The level of wastage of bilge hopper plating may have to be established by means of thickness measurement.

2.2 Deformations

2.2.1 Buckling of the bilge hopper plating may occur between longitudinals in areas subject to in-plane transverse compressive stresses or between floors in areas subject to in-plane longitudinal compressive stresses.

2.2.2 Whenever deformations are observed on the bilge hopper, further survey in the double bottom tanks is imperative in order to determine the extent of the damage. The deformation may cause the breakdown of coating within the double bottom, which in turn may lead to accelerated corrosion rate in these unprotected areas.

2.3 Fractures

2.3.1 Fractures will normally be found by close-up survey. Fractures that extend through the thickness of the plating or through the welds may be observed during pressure testing of the double bottom tanks.

3 What to look for - Hopper Tank survey

3.1 Material wastage

3.1.1 The level of wastage of hopper side internal structure (longitudinals, transverses, floors, girders, etc.) may have to be established by means of thickness measurements.

Rate and extent of corrosion depends on the corrosive environment, and protective measures employed, such as coatings and sacrificial anodes. The following structures are generally susceptible to corrosion (also see **3.1.2** - **3.1.3**).

(a) Structure in corrosive environment:
- Transverse bulkhead and girder adjacent to heated fuel oil or cargo oil tanks.

(b) Structure subject to high stress:
- Face plates and web plates of transverse at corners;
- Connection of longitudinal to transverse.

(c) Areas susceptible to coating breakdown
- Back side of face plate of longitudinal;
- Welded joint;
- Edge of access opening.

(c) Areas subject to poor drainage:
- Web of side longitudinals.

3.1.2 If the protective coating is not properly maintained, structure in the ballast tank may suffer severe localised corrosion. Transverse webs in the hopper tanks may suffer severe corrosion at their corners where high shearing stresses occur, especially where collar plate is not fitted to the slot of the longitudinal.

3.1.3 The high temperature due to heated cargo oil tanks may accelerate corrosion of ballast tank structure near heated cargo oil tanks. The rate of corrosion depends on several factors such as:

- Temperature and heat input to the ballast tank.
- Condition of original coating and its maintenance.
- Ballasting frequency and operations.
- Age of ship and associated stress levels as corrosion reduces the thickness of the structural elements and can result in fracturing and buckling.

3.2 Deformations

3.2.1 Where deformations are identified during bilge hopper plating survey (See **2.2**) and external bottom survey (See **4.2**), the deformed areas should be subjected to in tank survey to determine the extent of the damage to the coating and internal structure.

Deformations in the structure not only reduce the structural strength but may also cause breakdown of the coating, leading to accelerated corrosion.

3.3 Fractures

3.3.1 Fractures will normally be found by close-up survey.

3.3.2 Fractures may occur in way of the welded or radiused knuckle between the inner bottom and hopper sloping plating if the side girder in the double bottom is not in line with the knuckle and also when the floors below have a large spacing, or when corner scallops are created for ease of fabrication. The local stress variations due to the loading and subsequent deflection may lead to the development of fatigue fractures which can be categorised as follows:

(a) Parallel to the knuckle weld for those knuckles which are welded and not radiused.

(b) In the inner bottom and hopper plating and initiated at the centre of a radiused knuckle.

(c) Extending in the hopper web plating and floor weld connections starting at the corners of scallops, where such exist, in the underlying hopper web and floor.

(d) Extending in the web plate as in (c) above but initiated at the edge of a scallop.

3.3.3 The fractures in way of connection of inner bottom plating/hopper sloping plating to stool may be caused by the cyclic deflection of the inner bottom induced by repeated loading from the sea or due to poor "through-thickness" properties of the inner bottom plating. Scallops in the underlying girders can create stress concentrations which further increase the risk of fractures. These can be categorised as follows: (See also **Examples of Structure Detail Failures of this Group**).

(a) In way of the intersection between inner bottom and stool. These fractures often generate along the edge of the welded joint above the centre line girder, side girders, and sometimes along the duct keel sides.

(b) Fractures in the inner bottom longitudinals and the bottom longitudinals in way of the intersection with the watertight floors below the transverse bulkhead stools.

(c) Fractures at the connection between the longitudinals and the vertical stiffeners or brackets on the floors.

(d) Lamellar tearing of the inner bottom plate below the weld connection with a lower stool caused by high bending stresses. The size of stool and lack of full penetration welds could also be a contributory factor, as well as poor "through-thickness" properties of the tank top plating.

3.3.4 Transition region

In general, the termination of the following structural members at the collision bulkhead and engine room forward bulkhead is prone to fractures:

- Hopper tank sloping plating
- Panting stringer in fore peak tank
- Inner bottom plating in engine room

In order to avoid stress concentration due to discontinuity appropriate stiffeners are to be provided in the opposite space. If such stiffeners are not provided, or are deficient due to corrosion or misalignment, fractures may occur at the terminations.

4 What to look for - External bottom survey

4.1 Material wastage

4.1.1 Hull structure below the water line can usually be inspected only when the ship is dry-docked. The opportunity should be taken to inspect the external plating thoroughly. The level of wastage of the bottom plating may have to be established by means of thickness measurements.

4.1.2 Severe grooving along welding of bottom plating is often found (See **Photographs 1** and **2**). This grooving can be accelerated by poor maintenance of the protective coating and/or sacrificial anodes fitted to the bottom plating.

4.1.3 Bottom or "docking" plugs should be carefully examined for excessive corrosion along the edge of the weld connecting the plug to the bottom plating

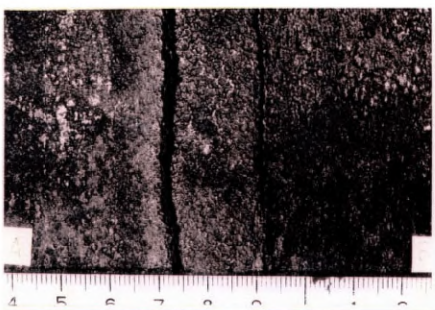

Photograph 1
Grooving corrosion of welding of bottom plating

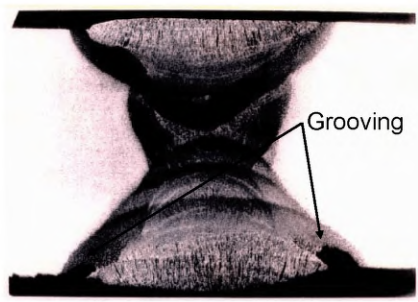

Photograph 2
Section of the grooving shown in Photograph 1

4.2 Deformations

4.2.1 Buckling of the bottom shell plating may occur between longitudinals or floors in areas subject to in-plane compressive stresses (either longitudinally or transversely). Deformations of bottom plating may also be attributed to dynamic force caused by wave slamming action at the forward part of the vessel, or contact with underwater objects. When deformation of the shell plating is found, the affected area should be inspected internally. Even if the deformation is small, the internal structure may have suffered serious damage.

4.3 Fractures

4.3.1 The bottom shell plating should be inspected when the hull has dried since fractures in shell plating can easily be detected by observing leakage of water from the cracks in clear contrast to the dry shell plating.

4.3.2 Fractures in butt welds and fillet welds, particularly at the wrap around at scallops and ends of bilge keel, are sometimes observed and may propagate into the bottom plating. The cause of fractures in butt welds is usually related to weld defect or grooving. If the bilge keels are divided at the block joints of hull, all ends of the bilge keels should be inspected.

5 General comments on repair

5.1 Material Wastage

5.1.1 Repair work in bilge hopper will require careful planning in terms of accessibility and gas freeing is required for repair work in cargo oil and fuel oil tanks.

5.1.2 Plating below suction heads and sounding pipes is to be replaced if the average thickness is below the acceptable limit. When scattered deep pitting is found, it may be repaired by welding.

5.2 Deformations

Extensively deformed bilge hopper and bottom plating should be replaced together with the deformed portion of girders, floors or transverse web frames. If there is no evidence that the deformation was caused by grounding or other excessive local loading, or that it is associated with excessive wastage, additional internal stiffening may need to be provided. In this regard, the Classification Society concerned should be contacted.

5.3 Fractures

5.3.1 Repair should be carried out in consideration of nature and extent of the fractures.

(a) Fractures of a minor nature may be veed-out and rewelded. Where cracking is more extensive, the structure is to be cropped and renewed.

(b) For fractures caused by the cyclic deflection of the double bottom, reinforcement of the structure may be required in addition to cropping and renewal of the fractured part.

(c) For fractures due to poor through thickness properties of the plating, cropping and renewal with steel having adequate through thickness properties is an acceptable solution.

5.3.2 The fractures in the knuckle connection between inner bottom plating and hopper sloping plating should be repaired as follows.

(a) Where the fracture is confined to the weld, the weld is to be veed-out and renewed using full penetration welding, with low hydrogen electrodes or equivalent.

(b) Where the fracture has extended into the plating of any tank boundary, then the fractured plating is to be cropped, and part renewed.

(c) Where the fracture is in the vicinity of the knuckle, the corner scallops in floors and transverses are to be omitted, or closed by welded collars. The sequence of welding is important, in this respect every effort should be made to avoid the creation of locked in stresses due to the welding process.

(d) Where the floor spacing is 2.0m or greater, brackets are to be arranged either in the vicinity of, or mid-length between, floors in way of the intersection. The brackets are to be attached to the adjacent inner bottom and hopper longitudinals. The thickness of the bracket is to be in accordance with the Rules of the Classification Society concerned.

5.3.3 Fractures in the connection between inner bottom plating/hopper sloping plating and stool should be repaired as follows.

(a) Fractures in way of section of the inner bottom and bulkhead stool in way of the double bottom girders can be veed out and welded. However, reinforcement of the structure may be required, e.g. by fitting additional double bottom girders on both sides affected girder or equivalent reinforcement. Scallops in the floors should be closed and air holes in the non-watertight girders re-positioned.

If the fractures are as a result of differences in the thickness of adjacent stool plate and the floor below the inner bottom, then it is advisable to crop and part renew the upper part of the floor with plating having the same thickness and mechanical properties as the adjacent stool plating.

If the fractures are as a result of misalignment between the stool plating and the double bottom floors, the structure should be released to rectifying the misalignment.

(b) Fractures in the inner bottom longitudinals and the bottom longitudinals in way of the intersection with watertight floors are to be cropped and partly renewed. In addition, brackets with soft toes are to be fitted in order to reduce the stress concentrations at the floors or stiffener.

(c) Fractures at the connection between the longitudinals and the vertical stiffeners or brackets are to be cropped and longitudinal part renewed if the fractures extend to over one third of the depth of the longitudinal. If fractures are not extensive these can be veed out and welded. In addition, reinforcement should be provided in the form of modification to existing bracket toes or the fitting of additional brackets with soft toes in order to reduce the stress concentration.

(d) Fractures at the corners of the transverse diaphragm/stiffeners are to be cropped and renewed. In addition, scallops are to be closed by overlap collar plates. To reduce the probability of such fractures recurring, consideration is to be given to one of the following reinforcements or modifications.
- The fitting of short intercostal girders in order to reduce the deflection at the problem area.

(e) Lamellar tearing may be eliminated through improving the type and quality of the weld, i.e. full penetration using low hydrogen electrodes and incorporating a suitable weld throat.

Alternatively the inner bottom plating adjacent to and in contact with the lower stool plating is substituted with plating of "Z" quality steel, which has good "through-thickness" properties.

5.3.4 Bilge keel should be repaired as follows:

(a) Fractures or distortion in bilge keels must be promptly repaired. Fractured butt welds should be repaired using full penetration welds and proper welding procedures. The bilge keel is subjected to the same level of longitudinal hull girder stress as the bilge plating, fractures in the bilge keel can propagate into the shell plating.

(b) Termination of bilge keel requires proper support by internal structure. This aspect should be taken into account when cropping and renewing damaged parts of a bilge keel.

Group 1 Bilge Hopper

OIL Tankers	Guidelines for Surveys, Assessment and Repair of Hull Structure	
Group 1	Cargo area	Example No.
	Hopper and double bottom ballast tank	1
Detail of damage	Fracture on the inner bottom plating at the connection of hopper plate to inner bottom	

Sketch of damage

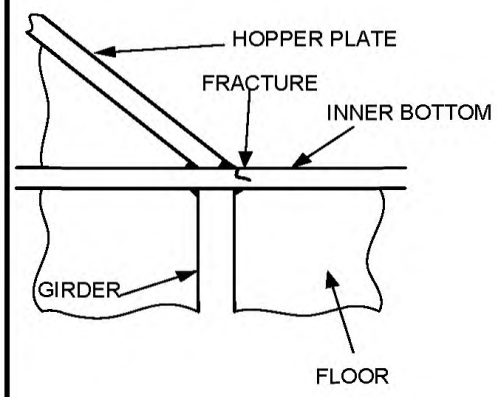

Sketch of repair

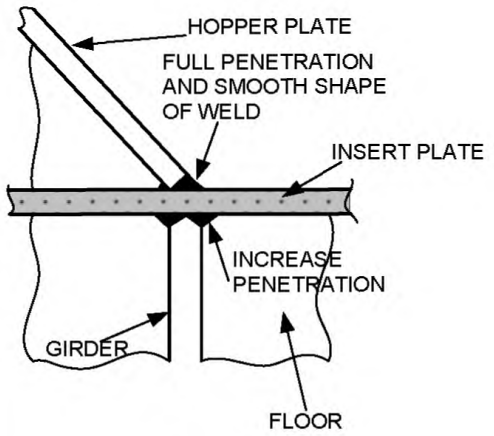

NEW CONSTRUCTION

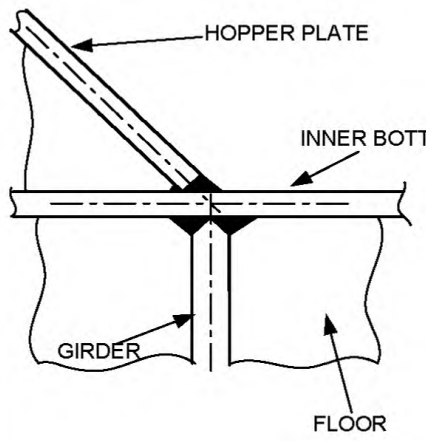

Notes: Plate midlines intersect

Factors which may have caused damage

1. Stress concentration at juncture of hopper plate to inner bottom.
2. Insufficient welding connection.
3. Misalignment between hopper plate, inner bottom and girder.

Notes on repairs

See Sketch.

OIL Tankers	Guidelines for Surveys, Assessment and Repair of Hull Structure	
Group 1	Cargo area	Example No.
	Hopper and double bottom ballast tank	2
Detail of damage	Fracture at connection of bilge hopper plate and inner bottom	

Sketch of damage

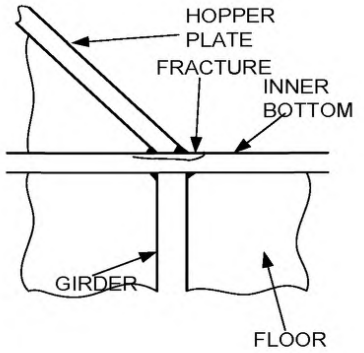

Sketch of repair

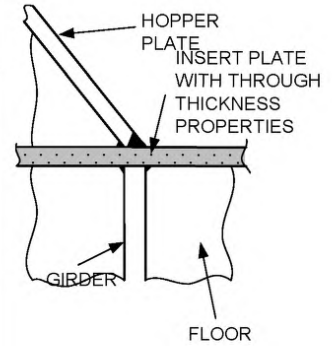

Notes: Plate midlines intersect

Factors which may have caused damage

1. Stress concentration at the knuckle.

Notes on repairs

See Sketch.

OIL Tankers	Guidelines for Surveys, Assessment and Repair of Hull Structure	
Group 1	Cargo area	Example No.
	Hopper and double bottom ballast tank	3
Detail of damage	Fracture at connection of bilge hopper plate and inner bottom	

Sketch of damage

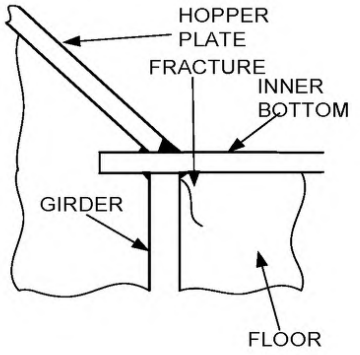

Sketch of repair

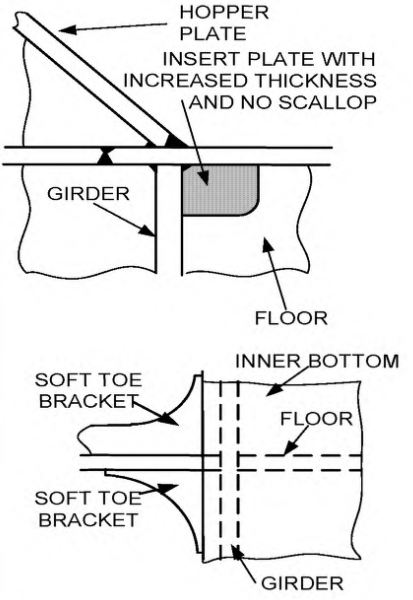

Notes: Plate midlines intersect

Factors which may have caused damage	Notes on repairs
1. Stress concentration at the knuckle.	See Sketch.

OIL Tankers	Guidelines for Surveys, Assessment and Repair of Hull Structure	
Group 1	Cargo area	Example No.
	Hopper and double bottom ballast tank	4
Detail of damage	Fracture at connection of bilge hopper plate and inner bottom	

Sketch of damage

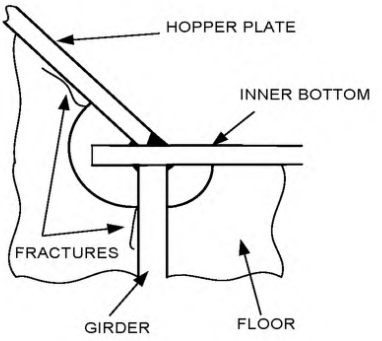

Sketch of repair

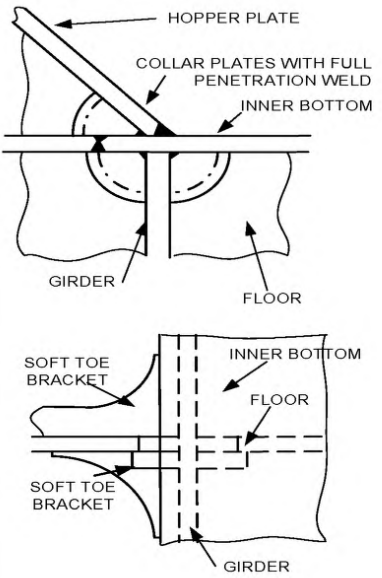

Notes: Plate midlines intersect

Factors which may have caused damage	**Notes on repairs**
1. Stress concentration at the knuckle.	See Sketch.

OIL Tankers	Guidelines for Surveys, Assessment and Repair of Hull Structure	
Group 1	Cargo area	Example No.
	Hopper and double bottom ballast tank	5
Detail of damage	Fractured floor and inner bottom plate in way of juncture of inner bottom to hopper plate	

Sketch of damage

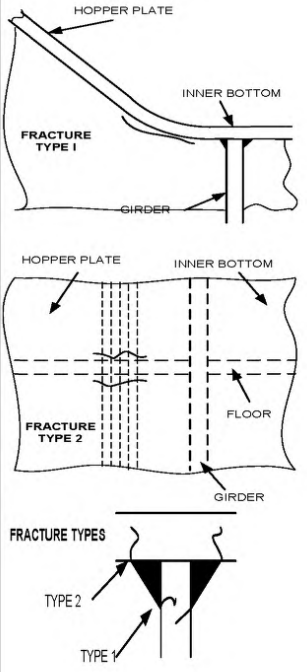

Sketch of repair

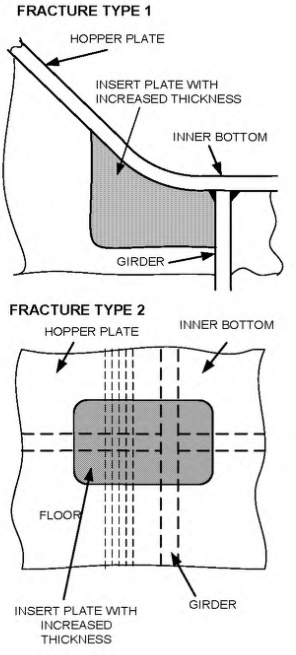

Factors which may have caused damage

1. Misalignment. The three mid-lines do not cross at the same joint. This misalignment produces an out-of-plane deformation of inner bottom plate in way of knuckle line.
2. Stress concentration at connection between floor and inner bottom plate.
3. Static and dynamic load of ballast water.

Notes on repairs

See Sketch.

OIL Tankers	Guidelines for Surveys, Assessment and Repair of Hull Structure	
Group 1	Cargo area	Example No.
	Hopper and double bottom ballast tank	6
Detail of damage	Fracture at connection of bilge hopper plate and web frame	

Sketch of damage

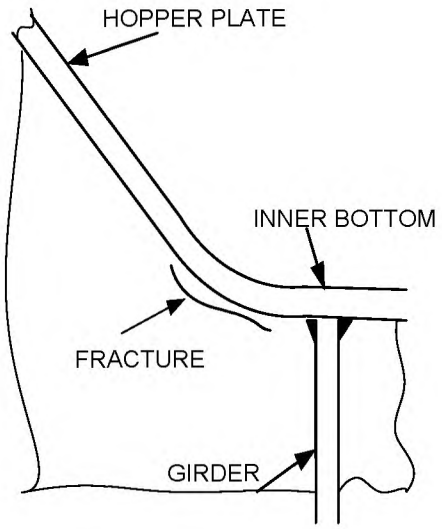

Sketch of repair

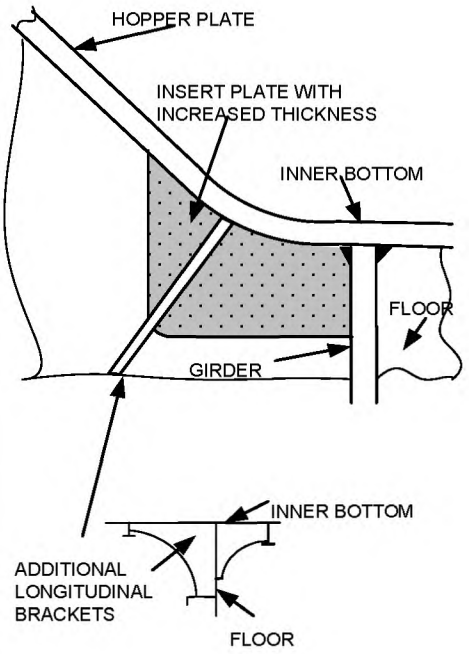

Factors which may have caused damage

1. Stress concentration due to reduction of effective flange area at curved plate.

Notes on repairs

See Sketch.

OIL Tankers	Guidelines for Surveys, Assessment and Repair of Hull Structure	
Group 1	Cargo area	Example No.
	Hopper and double bottom ballast tank	7
Detail of damage	Rounded hopper plate deformation in way of the floor	

Sketch of damage

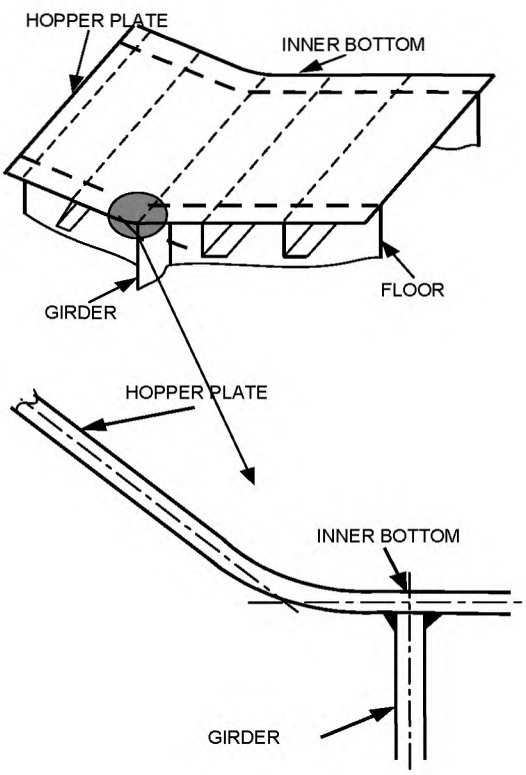

Sketch of repair

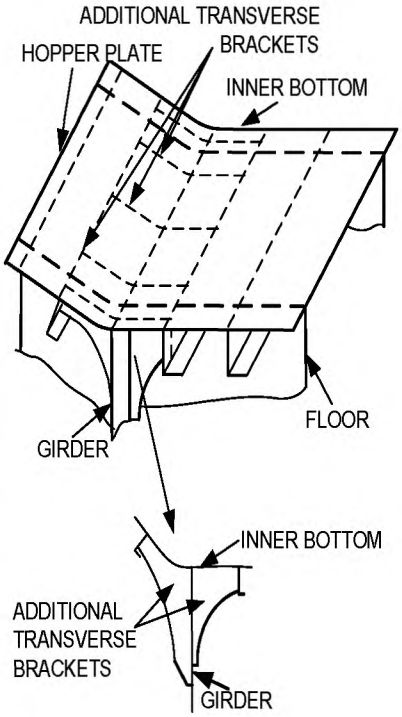

Factors which may have caused damage

1. Misalignment. The three midlines do not cross at the same joint. This misalignment produces an out-of-plane deformation in knuckled plate in the vicinity of floor.
2. Insufficient stiffening between floors.

Notes on repairs

See Sketch.

OIL Tankers	Guidelines for Surveys, Assessment and Repair of Hull Structure	
Group 1	Cargo area	Example No.
	Wing cargo tank	8
Detail of damage	Fracture at the connection of hopper plate to outside longitudinal bulkhead.	

Sketch of damage

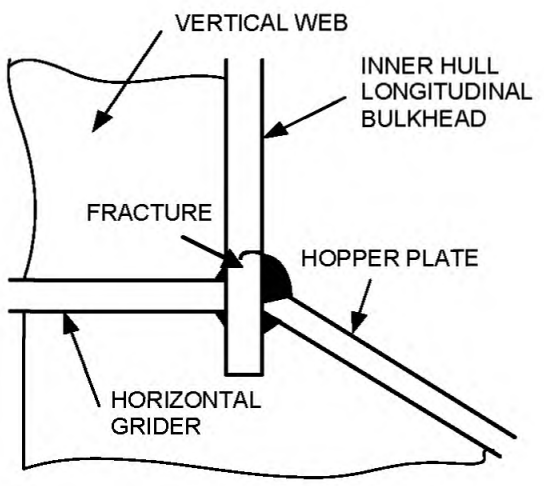

Sketch of repair

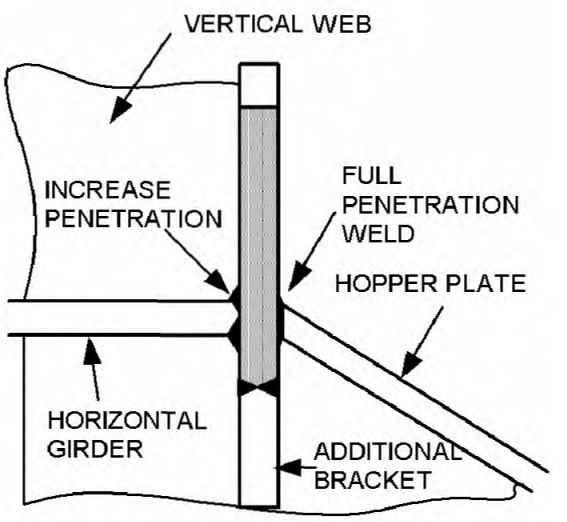

Factors which may have caused damage

1. Stress concentration at junction of hopper plate to outside longitudinal bulkhead.
2. Insufficient welding connection and/or incorrect shape of the weld toe.
3. Misalignment between hopper plate, outside longitudinal bulkhead and side stringer.

Notes on repairs

See Sketch.

OIL Tankers	Guidelines for Surveys, Assessment and Repair of Hull Structure	
Group 1	Cargo area	Example No.
	Hopper and double bottom ballast tank	9
Detail of damage	Fracture in gusset plate in line with inner bottom	

Sketch of damage

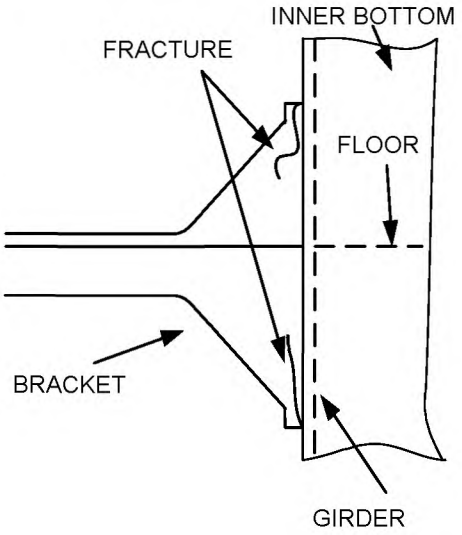

Sketch of repair

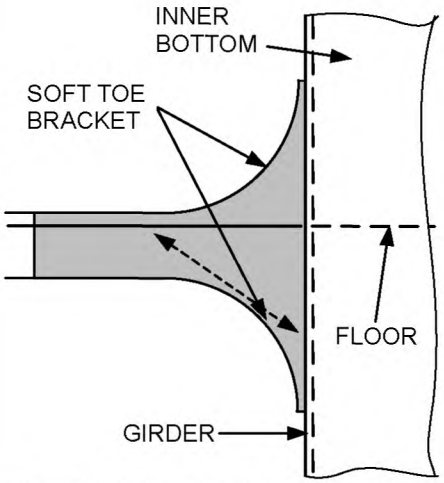

Notes: Bracket radii as large as practicable.
Bracket same thickness as inner bottom stiffener.
Toe height should be small as possible while still allowing return weld (wrapped weld).

Factors which may have caused damage

1. Stress concentration due to small radius and abrupt toe.
2. Insufficient welding.
3. Insufficient sectional area (thickness x breadth) of the connecting bracket.

Notes on repairs

See Sketch.

OIL Tankers	Guidelines for Surveys, Assessment and Repair of Hull Structure	
Group 1	Cargo area	Example No.
	Hopper ballast tank	10
Detail of damage	Fracture in way of cut-out in hopper plate	

Sketch of damage

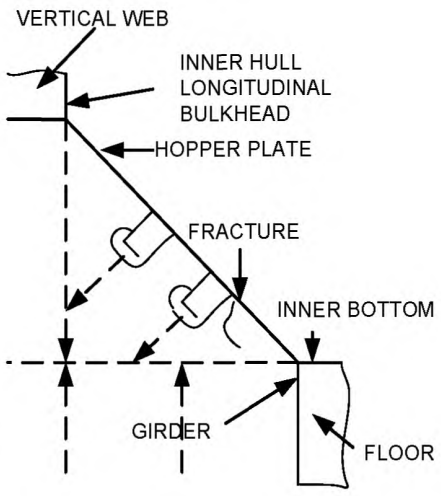

Sketch of repair

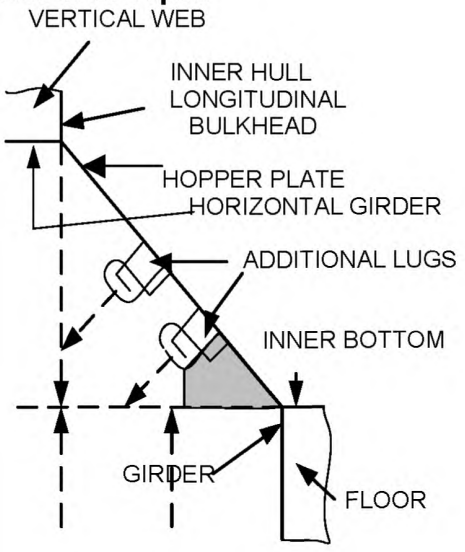

Factors which may have caused damage

1. Stress concentration due to no collar plate.

Notes on repairs

See Sketch.

Group 2 Wing Ballast Tank

Contents

1 General

2 What to look for
- 2.1 Material wastage
- 2.2 Deformations
- 2.3 Fractures

3 General comments on repair
- 3.1 Material wastage
- 3.2 Deformations
- 3.3 Fractures

Examples of structural detail failures and repairs – Group 2

Example No.	Title
1	Crack in way of connection of longitudinals to transverse bulkhead
2	Crack in way of connection of longitudinals to transverse webs
3	Fracture in way of web and flat bar stiffener at cut outs for longitudinal stiffener connections
4	Fracture in way of web and flat bar stiffener at cut outs for longitudinal stiffener connections as Example 3 but with faceplate attached to underside of web. Flat bar lap welded.
5	Buckling in way of side web panels above hopper horizontal girder
6	Panels of side horizontal girders in way of transverse bulkhead
7	Fracture at connection of horizontal stringers to transverse web frames and horizontal girders

1 General

1.1 Wing Ballast tanks are highly susceptible to corrosion and wastage of the internal structure. This is a potential problem for all double hull tankers, particularly for ageing ships and others where the coatings have broken down. Coatings, if applied and properly maintained, serve as an indication as to whether the structure remains in satisfactory condition and highlights any structural defects.

In some ships wing ballast tanks are protected by sacrificial anodes in addition to coatings. This system is not effective for the upper parts of the tanks since the system requires the structure to be fully immersed in seawater, and the tanks may not be completely filled during ballast voyages.

1.2 Termination of longitudinals in the fore and aft regions of the ship, in particular at the collision and engine room bulkheads, is prone to fracture due to high stress concentration if the termination detail is not properly designed.

2 What to look for

2.1 Material wastage

2.1.1 The combined effect of the marine environment, high humidity atmosphere as well as adjacent heated cargo tanks within wing ballast tank will give rise to a high corrosion rate.

2.1.2 Rate and extent of corrosion depends on the environmental conditions, and protective measures employed, such as coatings and sacrificial anodes. The following structures are generally susceptible to corrosion.

(a) Structure in corrosive environment:
- Deck plating and deck longitudinal
- Transverse bulkhead adjacent to heated fuel oil tank

(b) Structure subject to high stress:
- Connection of side longitudinal to transverse

(c) Areas susceptible to coating breakdown:
- Back side of faceplate of longitudinal
- Welded joint
- Edge of access opening

(d) Areas subjected to poor drainage:
- Web plating of side and sloping longitudinals

2.2 Deformations

2.2.1 Deformation of structure may be caused by contact (with quay side, ice, touching underwater objects, lightering service, etc.), collision, and high stress. Attention should be paid to the following areas during survey:

(a) Structure subjected to high stress
(b) Structure in way of tug/pier/fender contact

2.3 Fractures

2.3.1 Attention should be paid to the following areas during survey for fracture damage:

(a) Areas subjected to stress concentration
- Welded joints of faceplate of transverse at corners
- Connection of the lowest longitudinal to transverse web frame, especially with reduced scantlings.
- Termination of longitudinal in fore and aft wing tanks

(b) Areas subjected to dynamic wave loading
- Connection of side longitudinal to watertight bulkhead
- Connection of side longitudinal to transverse web frame



Photograph 1 Side shell fracture in way of horizontal stringer weld

2.3.2 The termination of the following structural members at the collision bulkhead prone to fracture damage due to discontinuity of the structure:
- Fore peak tank top plating (Boatswain's store deck plating)

In order to avoid stress concentration due to discontinuity appropriate stiffeners are to be provided in the opposite space. If such stiffeners are not provided, or are deficient due to corrosion or misalignment, fractures may occur at the terminations.

3 General comments on repair

3.1 Material wastage

3.1.1 If the corrosion is caused by high stress concentration, renewal with original thickness is not sufficient to avoid reoccurrence. Renewal with increased thickness and/or appropriate reinforcement should be considered in conjunction with appropriate corrosion protective measures.

3.2 Deformations

3.2.1 Any damage affecting classification should be reported to the classification society. If the deformation is considered to be related to inadequate structural strength, appropriate reinforcement should be carried out. Where the deformation is related to corrosion, appropriate corrosion prevention measures should be considered. Where the deformation is related to mechanical damages the structure is to be repaired as original.

3.3 Fractures

3.3.1 If the cause of the fracture is fatigue under the action of cyclic wave loading, consideration should be given to the improvement of structural detail design, such as provision of soft toe bracket, to reduce stress concentration. If the fatigue fracture is vibration related, the damage is usually associated with moderate stress levels at high cycle rate, improvement of structural detail may not be effective. In this case, avoidance of resonance, such as providing additional stiffening, may be considered.

Where fracture occurs due to material under excessive stress, indicating inadequate structural strength, renewal with thicker plate and/or providing appropriate reinforcement should be considered.

Group 2 Wing Ballast Tank

OIL Tankers	Guidelines for Surveys, Assessment and Repair of Hull Structure	
Group 2	Cargo area	Example No.
	Wing ballast tank	1
Detail of damage	Crack in way of connection of longitudinals to transverse bulkhead	

Sketch of damage

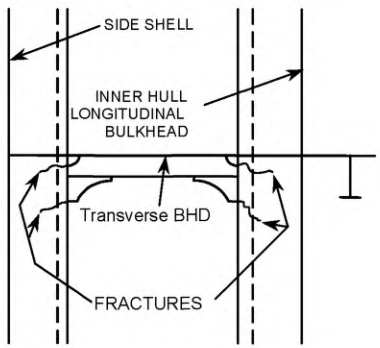

Sketch of repair

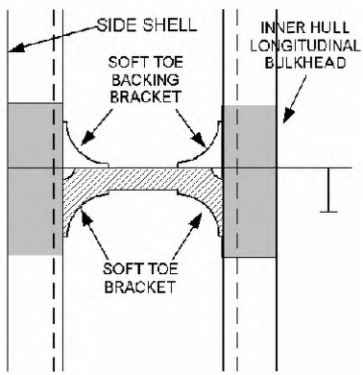

Factors which may have caused damage

1. Asymmetrical connection of bracket without backing bracket.
2. Relative deflection of adjoining transverse web against transverse bulkhead.
3. Additional biaxial bending stresses due to asymmetry of the angle bar longitudinal instead of symmetric T section.
4. Dynamic load in the vicinity of the water line.
5. Large upstand at bracket toe.

Notes on repairs

See Sketch.

OIL Tankers	Guidelines for Surveys, Assessment and Repair of Hull Structure	
Group 2	Cargo area	Example No.
	Wing ballast tank	2
Detail of damage	Crack in way of connection of longitudinals to transverse webs	

Sketch of damage

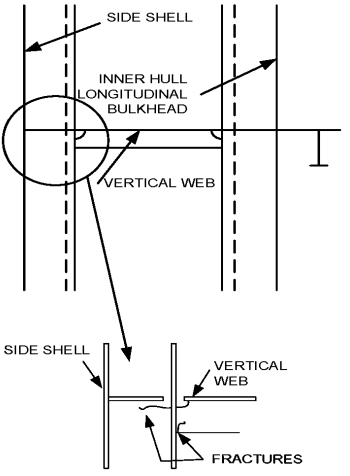

Sketch of repair

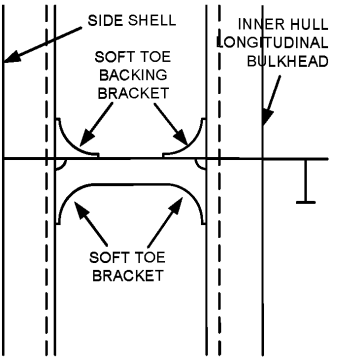

Factors which may have caused damage

1. Asymmetrical connection of flat bar stiffener resulting in high peak stresses at the heel of the stiffener.
2. Insufficient area of connection of longitudinal to web.
3. High bending stresses in the longitudinal.
4. Additional biaxial bending stresses due to asymmetry of the longitudinal (angle bar instead of symmetric T bar).
5. Stress concentration at the square angles at heel and toe of the connections.
6. High shear stress in the transverse web.

Notes on repairs

See Sketch.

OIL Tankers	Guidelines for Surveys, Assessment and Repair of Hull Structure	
Group 2	Cargo area	Example No.
	Wing ballast tank	3
Detail of damage	Fracture in way of web and flat bar stiffener at cut outs for longitudinal stiffener connections.	

Sketch of damage

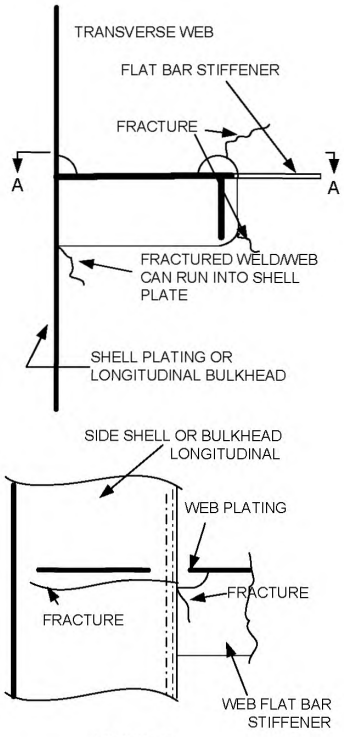

VIEW A-A

Sketch of repair

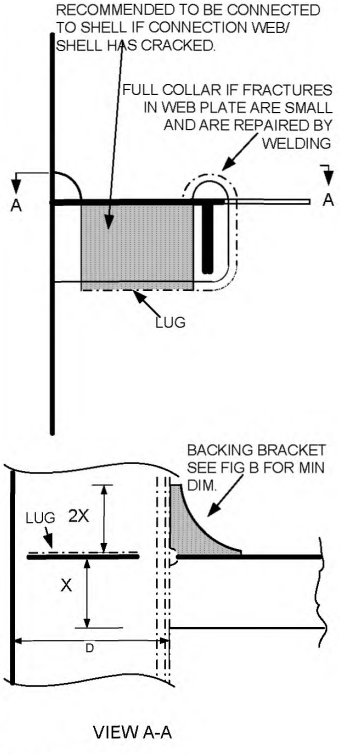

VIEW A-A

Insert longitudinal.

Factors which may have caused damage

1. Asymmetrical connection of flat bar stiffener resulting in high peak stress at heel of the stiffener under fatigue loading.
2. Insufficient area of connection of longitudinal to web plate.
3. Defective weld at return around the plate thickness.
4. High localized corrosion at areas of stress concentrations such as flat bar stiffener connections, corners of cut out for longitudinal and connection of web to shell at cut outs.
5. High shear stress in web of the transverse.
6. Dynamic seaway loads/motions.

Notes on repairs

See Sketch.

May also fit a double bracket to avoid fracture from toe.

OIL Tankers	Guidelines for Surveys, Assessment and Repair of Hull Structure	
Group 2	Cargo area	Example No.
	Wing ballast tank	4
Detail of damage	Fracture in way of web and flat bar stiffener at cut outs for longitudinal stiffener connections as Example 3 but with faceplate attached to underside of web. Flat bar lap welded.	

Sketch of damage

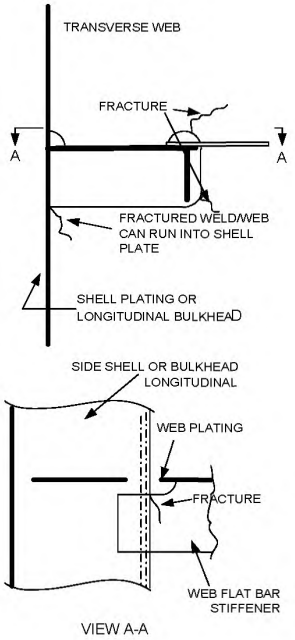

VIEW A-A

Sketch of repair

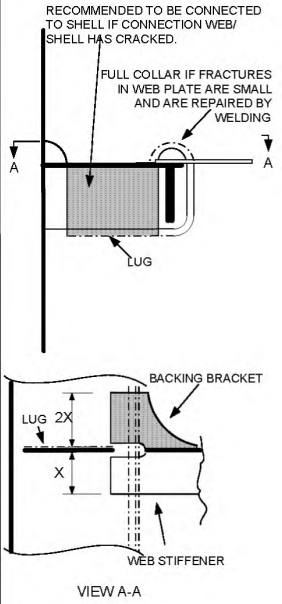

VIEW A-A

Insert web plate.

Factors which may have caused damage

1. Asymmetrical connection of flat bar stiffener resulting in high peak stress at heel of the stiffener under fatigue loading.
2. Fabricated longitudinal with welding onto exposed edge of the web resulting in poor fatigue strength of the connection of the longitudinal to the flat bar.
3. Insufficient area of connection of longitudinal to web plate.
4. Defective weld at return around the plate thickness.
5. High localized corrosion at areas of stress concentrations such as flat bar stiffener connections, corners of cut out for longitudinal and connection of lug to shell at cut outs.
6. High shear stress in web of the transverse.
7. Dynamic seaway loads/motions.

Notes on repairs

See Sketch.

1. May also fit a double bracket to avoid fracture from toe.

OIL Tankers	Guidelines for Surveys, Assessment and Repair of Hull Structure	
Group 2	Cargo area	Example No.
	Wing ballast tank	5
Detail of damage	Buckling in way of side web panels above hopper horizontal girder	

Sketch of damage

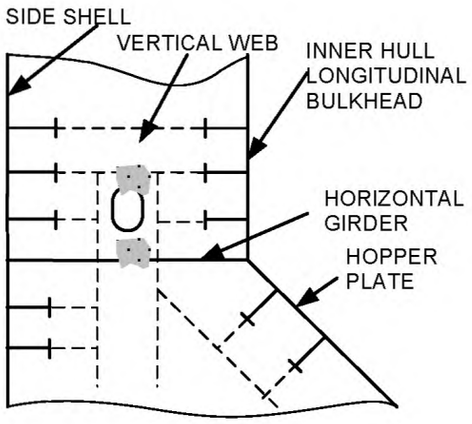

Sketch of repair

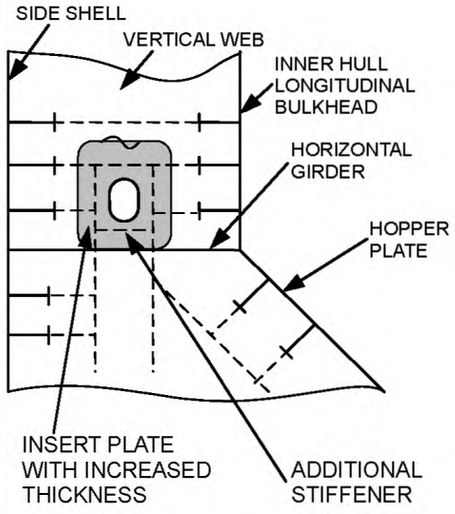

Factors which may have caused damage

1. High shear stress in the transverse web.
2. Insufficient buckling strength.

Notes on repairs

See Sketch.

OIL Tankers	Guidelines for Surveys, Assessment and Repair of Hull Structure	
Group 2	Cargo area	Example No.
	Wing ballast tank	6
Detail of damage	Panels of side horizontal girders in way of transverse bulkhead	

Sketch of damage

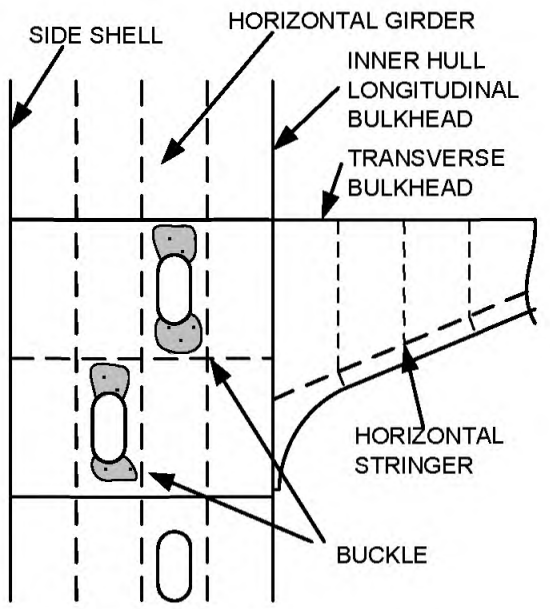

Sketch of repair

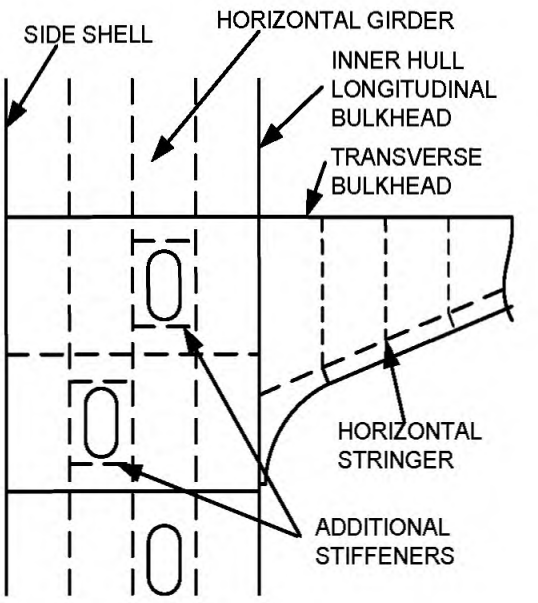

Factors which may have caused damage

1. High shear or compressive stress in the stringer.
2. Insufficient buckling strength.

Notes on repairs

See Sketch.

OIL Tankers	Guidelines for Surveys, Assessment and Repair of Hull Structure	
Group 2	Cargo area	Example No.
	Wing ballast tank	7
Detail of damage	Fracture at connection of horizontal stringers to transverse web frames and horizontal girders	

Sketch of damage

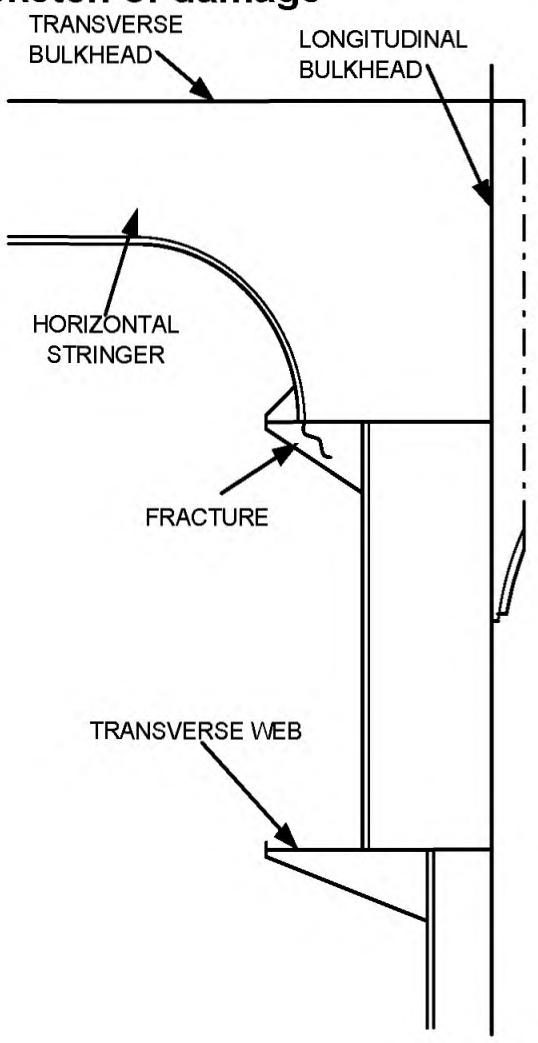

Sketch of repair

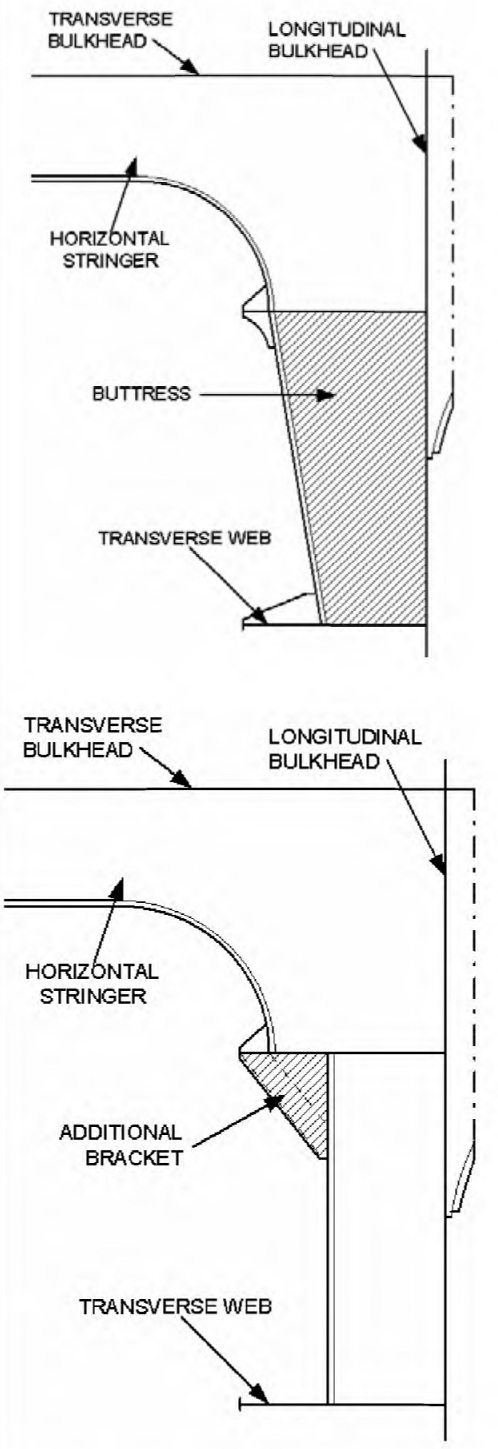

Factors which may have caused damage

1. Stress concentration due to discontinuous structure.
2. High shear stress in the horizontal stringer.

Notes on repairs

See Sketch.

Group 3 Bottom Ballast Tank

Contents

1 General

2 What to look for - Tank Top survey
2.1 Material wastage
2.2 Deformations
2.3 Fractures

3 What to look for - Double Bottom survey
3.1 Material wastage
3.2 Deformations
3.3 Fractures

4 What to look for - External Bottom survey
4.1 Material wastage
4.2 Deformations
4.3 Fractures

5 General comments on repair
5.1 Material wastage
5.2 Deformations
5.3 Fractures

Examples of structural detail failures and repairs – Group 3

Example No.	Title
1	Cracks in way of longitudinals connected to watertight floors
2	Fracture in way of stiffeners at connection of inner bottom and bottom shell to transverse bulkhead and floors
3	Connection of longitudinals to ordinary floors
4	Connection of longitudinals to ordinary floors
5	Panels of bottom girders in way of openings
6	Cut-outs on floors
7	Fractured stiffener connection to bottom and inner bottom longitudinals

1 General

1.1 In addition to contributing to the longitudinal bending strength of the hull girder, the double bottom structure provides support for the cargo in the tanks. The bottom shell at the forward part of the ship may sustain increased dynamic forces caused by slamming in heavy weather.

2 What to look for - Tank Top survey

2.1 Material wastage

2.1.1 The general corrosion condition of the tank top structure may be observed by visual survey. The level of wastage of tank top plating may have to be established by means of thickness measurement. Special attention should be paid to areas where pipes, e.g. cargo piping, heating coils, etc are fitted close to the tank top plating, making proper maintenance of the protective coating difficult to carry out.

2.1.2 Grooving corrosion is often found in or beside welds, especially in the heat affected zone. The corrosion is caused by the galvanic current generated from the difference of the metallographic structure between the heat affected zone and base metal. Coating of the welds is generally less effective compared to other areas due to roughness of the surface, which exacerbates the corrosion. Grooving corrosion may lead to stress concentrations and further accelerate the corrosion process. Grooving corrosion may be found in the base material where coating has been scratched or the metal itself has been mechanically damaged.

2.1.3 On uncoated areas or where the coating has broken down, pitting corrosion may occur in the tank top plating within cargo tanks. If not properly maintained, this may lead to cargo leakage into the double bottom ballast spaces.

2.2 Deformations

2.2.1 Buckling of the tank top plating may occur between longitudinals in areas subject to in-plane transverse compressive stresses or between floors in areas subject to in-plane longitudinal compressive stresses.

2.2.2 Whenever deformations are observed on the tank top, further survey in the double bottom tanks is imperative in order to determine the extent of the damage. The deformation may cause the breakdown of coating within the double bottom, which in turn may lead to accelerated corrosion rate in these unprotected areas.

2.3 Fractures

2.3.1 Fractures will normally be found by close-up survey. Fractures that extend through the thickness of the plating or through the welds may be observed during pressure testing of the double bottom tanks.

3 What to look for - Double Bottom survey

3.1 Material wastage

3.1.1 The level of wastage of double bottom internal structure (longitudinals, transverses, floors, girders, etc.) may have to be established by means of thickness measurements. Rate and extent of corrosion depends on the corrosive environment, and protective measures employed, such as coatings and sacrificial anodes. The following structures are generally susceptible to corrosion (also see **3.1.2** - **3.1.4**).

(a) Structure in corrosive environment:
- Transverse bulkhead and girder adjacent to heated fuel oil tank.
- Under side of inner bottom plating and attached longitudinals if the cargo tank above is heated.

(b) Structure subject to high stress
- Face plates and web plates of transverse at corners

c) Areas susceptible to coating breakdown
- Back side of faceplate of longitudinal
- Welded joint
- Edge of access opening

3.1.2 If the protective coating is not properly maintained, structure in the ballast tank may suffer severe localised corrosion. In general, structure at the upper part of the double bottom tank usually has more severe corrosion than that at the lower part.

3.1.3 The high temperature due to heated cargoes may accelerate corrosion of ballast tank structure near these heated tanks. The rate of corrosion depends on several factors such as:
- Temperature and heat input to the ballast tank.
- Condition of original coating and its maintenance.
- Ballasting frequency and operations.
- Age of ship and associated stress levels as corrosion reduces the thickness of the structural elements and can result in fracturing and buckling.

3.1.4 Shell plating below suction head often suffers localized wear caused by erosion and cavitation of the fluid flowing through the suction head. In addition, the suction head will be positioned in the lowest part of the tank and water/mud will cover the area even when the tank is empty. The condition of the shell plating may be established by feeling by hand beneath the suction head. When in doubt, the lower part of the suction head should be removed and thickness measurements taken. If the vessel is docked, the thickness can be measured from below. If the distance between the suction head and the underlying shell plating is too small to permit access, the suction head should be dismantled. The shell plating below the sounding pipe should also be carefully examined. When a striking plate has not been fitted or is worn out, heavy corrosion can be caused by the striking of the weight of the sounding tape.

3.2 Deformations

3.2.1 Where deformations are identified during tank top survey (See **2.2**) and external bottom survey (See **4.2**), the deformed areas should be subjected to internal survey to determine the extent of the damage to the coating and internal structure.

Deformations in the structure not only reduce the structural strength but may also cause breakdown of the coating, leading to accelerated corrosion.

3.3 Fractures

3.3.1 Fractures will normally be found by close-up survey.

(a) Fractures in the inner bottom longitudinals and the bottom longitudinals in way of the intersection with the watertight floors below the transverse bulkhead stools.

(b) Lamellar tearing of the inner bottom plate below the weld connection with the stool in the cargo oil tank caused by large bending stresses in the connection when in heavy ballast condition. The size of stool and lack of full penetration welds could also be a contributory factor, as well as poor "through-thickness" properties of the tank top plating.

3.3.2 Transition region

In general, the termination of the following structural members at the collision bulkhead and engine room forward bulkhead may be prone to fractures:

- Hopper tank sloping plating
- Panting stringer in fore peak tank
- Inner bottom plating in engine room

In order to avoid stress concentration due to discontinuity appropriate stiffeners are to be provided in the opposite space. If such stiffeners are not provided, or are deficient due to corrosion or misalignment, fractures may occur at the terminations.

4 What to look for - External Bottom survey

4.1 Material wastage

4.1.1 Hull structure below the water line can usually be surveyed only when the ship is dry-docked. The opportunity should be taken to inspect the external plating thoroughly. The level of wastage of the bottom plating may have to be established by means of thickness measurements.

4.1.2 Severe grooving along welding of bottom plating is often found (See also **Photographs 1** and **2 in Group 1**). This grooving can be accelerated by poor maintenance of the protective coating and/or sacrificial anodes fitted to the bottom plating.

4.1.3 Bottom or "docking" plugs should be carefully examined for excessive corrosion along the edge of the weld connecting the plug to the bottom plating.

4.2 Deformations

4.2.1 Buckling of the bottom shell plating may occur between longitudinals or floors in areas subject to in-plane compressive stresses (either longitudinally or transversely). Deformations of bottom plating may also be attributed to dynamic force caused by wave slamming action at the forward part of the vessel, or contact with underwater objects. When deformation of the shell plating is found, the affected area should be surveyed internally. Even if the deformation is small, the internal structure may have suffered serious damage.

4.3 Fractures

4.3.1 The bottom shell plating should be surveyed when the hull has dried since fractures in shell plating can easily be detected by observing leakage of water from the cracks in clear contrast to the dry shell plating.

4.3.2 Fractures in butt welds and fillet welds, particularly at the wrap around at scallops and ends of bilge keel, are sometimes observed and may propagate into the bottom plating. The cause of fractures in butt welds is usually related to weld defect or grooving. If the bilge keels are divided at the block joints of hull, all ends of the bilge keels should be surveyed.

5 General comments on repair

5.1 Material wastage

5.1.1 Repair work in double bottom will require careful planning in terms of accessibility and gas freeing is required for repair work in cargo oil tanks.

5.1.2 Plating below suction heads and sounding pipes is to be replaced if the average thickness is below the acceptable limit. When scattered deep pitting is found, it may be repaired by welding.

5.2 Deformations

Extensively deformed tank top and bottom plating should be replaced together with the deformed portion of girders, floors or transverse web frames. If there is no evidence that the deformation was caused by grounding or other excessive local loading, or that it is associated with excessive wastage, additional internal stiffening may need to be provided. In this regard, the Classification Society concerned should be contacted.

5.3 Fractures

5.3.1 Repair should be carried out in consideration of nature and extent of the fractures.

(a) Fractures of a minor nature may be veed-out and rewelded. Where cracking is more extensive, the structure is to be cropped and renewed.

(b) For fractures caused by the cyclic deflection of the double bottom, reinforcement of the structure may be required in addition to cropping and renewal of the fractured part.

(c) For fractures due to poor through thickness properties of the plating, cropping and renewal with steel having adequate through thickness properties is an acceptable solution.

Group 3 Bottom Ballast Tank

OIL Tankers	Guidelines for Surveys, Assessment and Repair of Hull Structure	
Group 3	Cargo area	Example No.
	Bottom ballast tank	1
Detail of damage	Cracks in way of longitudinals connected to watertight floors	

Sketch of damage

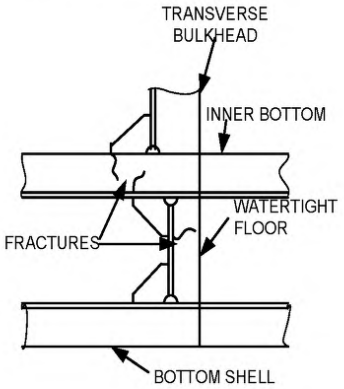

Sketch of repair

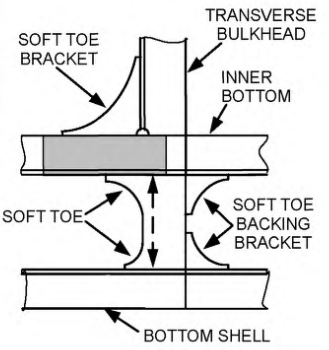

Factors which may have caused damage

1. Asymmetrical connection of bracket in association with a backing bracket, which is too small.
2. Relative deflection between adjacent floor and transverse bulkhead.
3. Inadequate shape of the brackets.
4. High stresses in the inner bottom longitudinal and the floor stiffener.

Notes on repairs

See Sketch.

OIL Tankers	Guidelines for Surveys, Assessment and Repair of Hull Structure	
Group 3	Cargo area	Example No.
	Bottom ballast tank	2
Detail of damage	Fracture in way of stiffeners at connection of inner bottom and bottom shell to transverse bulkhead and floors.	

Sketch of damage

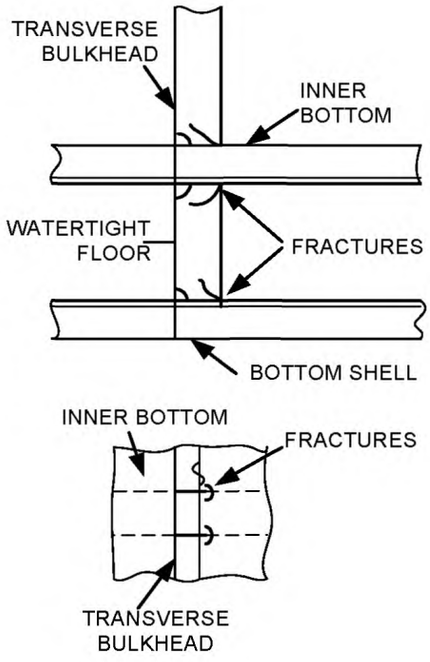

Sketch of repair

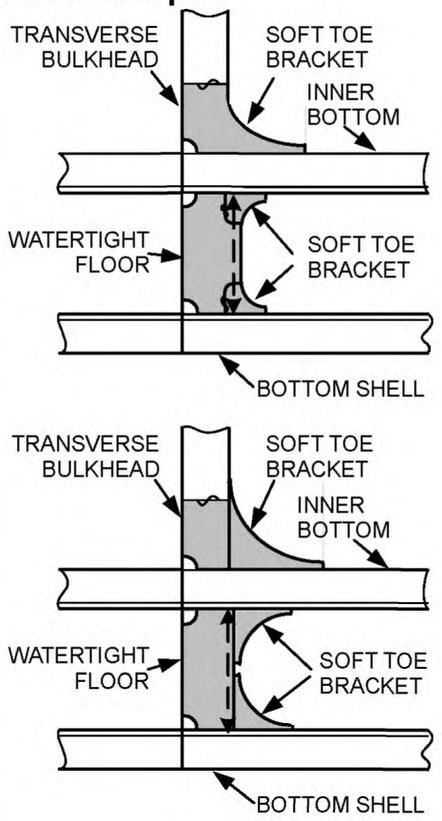

Factors which may have caused damage

1. Misalignment between bulkhead stiffener and inner bottom longitudinal.
2. High stress concentration.

Notes on repairs

See Sketch.

1. If tank top plating is fractured, part crop and insert.
2. Proper alignment between bulkhead stiffener and inner bottom longitudinal is critical for successful repair.
3. Soft backing brackets may also be added.

OIL Tankers	Guidelines for Surveys, Assessment and Repair of Hull Structure	
Group 3	Cargo area	Example No.
	Bottom ballast tank	3
Detail of damage	Connection of longitudinals to ordinary floors.	

Sketch of damage

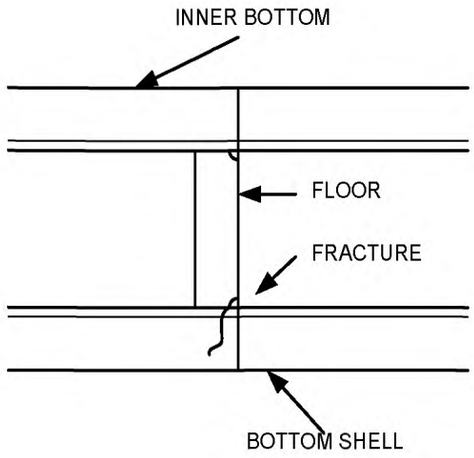

Sketch of repair

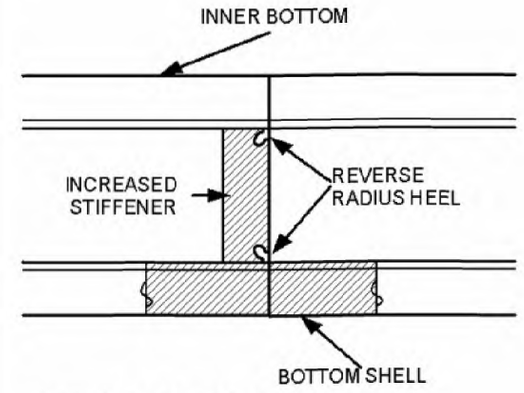

DETAIL OF REVERSE RADIUS HEEL

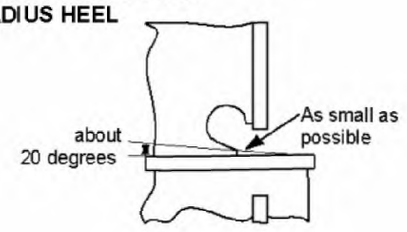

or

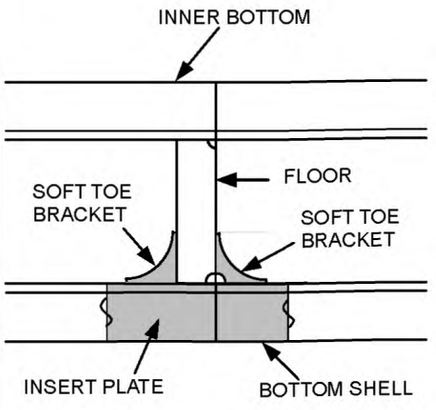

Factors which may have caused damage

1. Asymmetrical connection.
2. Relative deflection of adjacent floor to transverse bulkhead.

Notes on repairs

See Sketch.

OIL Tankers	Guidelines for Surveys, Assessment and Repair of Hull Structure	
Group 3	Cargo area	Example No.
	Bottom ballast tank	4
Detail of damage	Connection of longitudinals to ordinary floors	

Sketch of damage

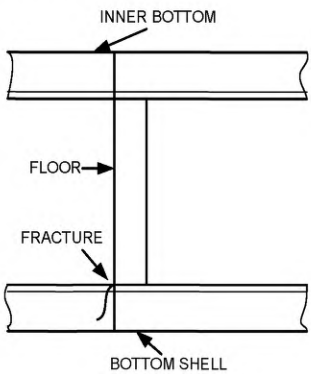

Sketch of repair

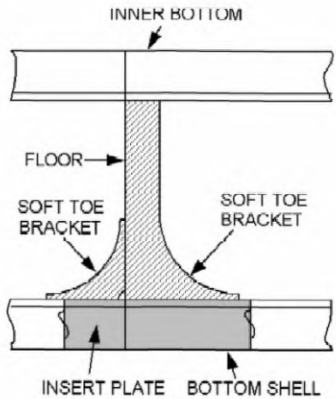

Factors which may have caused damage

1. Stress concentration at the connection of bottom longitudinal and stiffener on floor.

Notes on repairs

See Sketch.

1. Butt welds in bottom longitudinal should be kept clear of the soft toe bracket toes.
2. If possible soft toe bracket and vertical stiffener should be integral.

OIL Tankers	Guidelines for Surveys, Assessment and Repair of Hull Structure	
Group 3	Cargo area	Example No.
	Bottom ballast tank	5
Detail of damage	Panels of bottom girders in way of openings.	

Sketch of damage

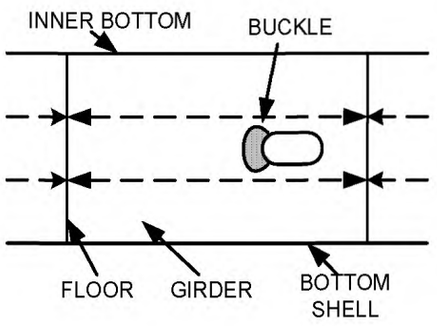

Sketch of repair

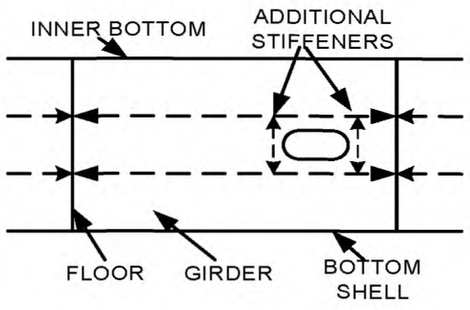

Factors which may have caused damage

1. High shear or compressive stress in the side girder.
2. Insufficient buckling strength.

Notes on repairs

See Sketch.

OIL Tankers	Guidelines for Surveys, Assessment and Repair of Hull Structure	
Group 3	Cargo area	Example No.
	Bottom ballast tank	6
Detail of damage	Cut-outs on floors	

Sketch of damage

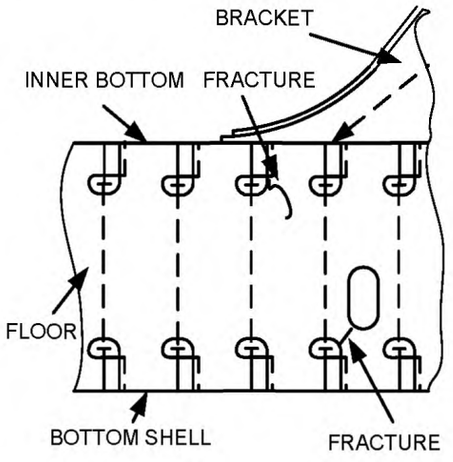

Sketch of repair

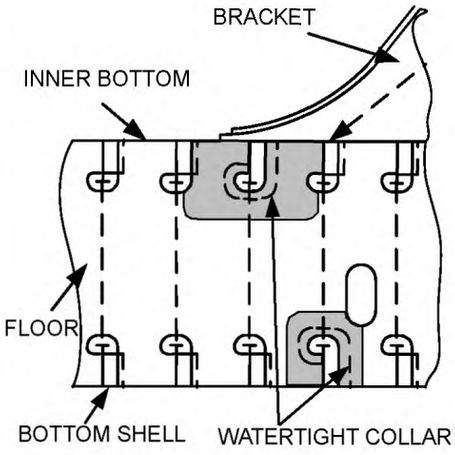

Above for relatively small fractures.

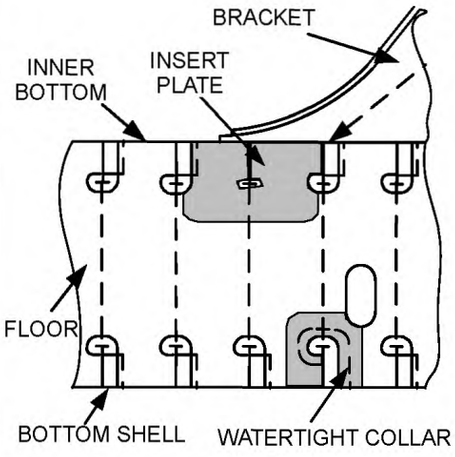

Above method for larger fractures.

Factors which may have caused damage

1. High stress in the vicinity of the transverse web frame bracket toe.
2. Lack of material between manhole and cut-out for bottom longitudinals.

Notes on repairs

1. Top sketch: Gouge and reweld fractures then fit WT collars.
2. Bottom sketch: As an alternative to rewelding and fitting collar, crop and insert.

OIL Tankers	Guidelines for Surveys, Assessment and Repair of Hull Structure	
Group 3	Cargo area	Example No.
	Bottom ballast tank	7
Detail of damage	Fractured stiffener connection to bottom and inner bottom longitudinals.	

Sketch of damage

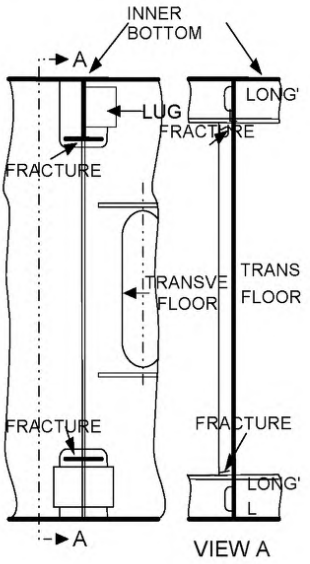

Sketch of repair

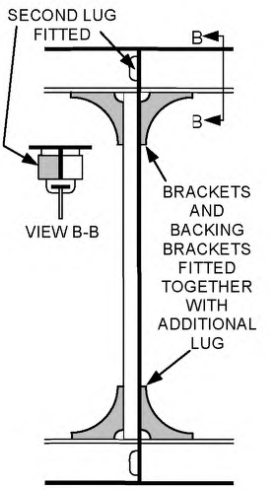

Factors which may have caused damage

1. Asymmetric connection leading to high local stresses at the connection of vertical stiffeners of the transverse floors to the inner and outer bottom longitudinals.
2. Wide slot for longitudinal leads to inefficient lug connection.
3. Sharp corners or flame-cut edges producing a notch effect.
4. Incomplete/defective weld at stiffener connection to the longitudinals.
5. Dynamic sea way loads/ship motions.

Notes on repairs

See Sketch.

Group 4 Web Frames in Cargo Tanks

Contents

1 General

2 What to look for – Web Frame survey
2.1 Material wastage
2.2 Deformations
2.3 Fractures

3 General comments on repair
3.1 Material wastage
3.2 Deformations
3.3 Fractures

Examples of structural detail failures and repairs – Group 4

Example No.	Title
1	Fracture at toe of web frame bracket connection to inner bottom
2	Cross ties and their end connections
3	Buckled transverse web plates in way of cross tie
4	Cut-outs around transverse bracket end
5	Fracture in way of connection of transverse web tripping brackets to longitudinal
6	Tripping brackets modification of the bracket toe

1 General

1.1 The web frame is the support for the transfer of the loads from the longitudinals. This structure has critical points at the intersections of the longitudinals, openings for access through the web frames and critical intersections such as found at the hopper knuckles as well as any bracket terminations. See also Figures 3 and 4 in **Chapter 1 Introduction**.

1.2 Depending upon the design or size of tanker web frames include deck transverse, vertical webs on longitudinal bulkheads and cross ties.

2 What to look for - Web Frame survey

2.1 Material wastage

2.1.1 The general condition with regard to wastage of the web frames may be observed by visual survey during the overall and close up surveys.

Attention is drawn to the fact that web frames may be significantly weakened by loss of thickness although diminution and deformations may not be apparent. Survey should be made after the removal of any scale, oil or rust deposit. Where the corrosion is smooth and uniform the diminution may not be apparent and thickness measurements would be necessary, to determine the condition of the structure.

2.1.2 Pitting corrosion may be found under coating blisters, which need to be removed before inspection. Pitting may also occur on horizontal structures, in way of sediments and in way of impingement from tank cleaning machines.

2.2 Deformations

2.2.1 Deformations may occur in web frames in way of excessive corrosion especially in way of openings in the structure. However, where deformation resulting from bending or shear buckling has occurred with a small diminution in thickness, this could be due to overloading and this aspect should be investigated before proceeding with repairs.

2.3 Fractures

2.3.1 Fractures may occur in way of discontinuities in the faceplates and at bracket terminations as well as in way of openings in structure. Fractures may also occur in way of cut outs for longitudinals.

3 General comments on repair

3.1 Material wastage

3.1.1 When the reduction in thickness of plating and stiffeners has reached the diminution levels permitted by the Classification Society involved, the wasted plating and stiffeners are to be cropped and renewed.

3.2 Deformations

3.2.1 Depending on the extent of the deformation, the structure should be restored to its original shape and position either by fairing in place and if necessary fitting additional panel stiffeners and/or by cropping and renewing the affected structure.

3.3 Fractures

3.3.1 Because of the interdependence of structural components it is important that all fractures and other significant damage to the frames and their brackets, however localised, are repaired.

3.3.2 Repair of fractures at the boundary of a cargo tanks to ballast tanks should be carefully considered, taking into account necessary structural modification, enhanced scantlings and material, to prevent recurrence of the fractures.

Group 4 Web Frames in Cargo Tanks

OIL Tankers	Guidelines for Surveys, Assessment and Repair of Hull Structure	
Group 4	Cargo area	Example No.
	Web Frame in cargo tank	1
Detail of damage	Fracture at toe of web frame bracket connection to inner bottom.	

Sketch of damage

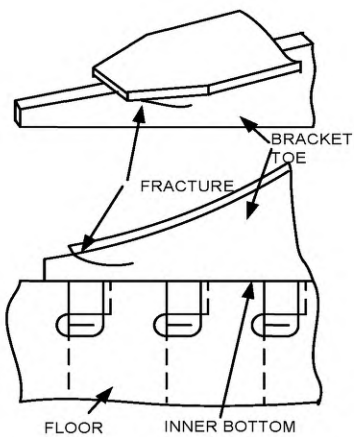

Sketch of repair

Modify Face Taper

1. Breadth taper 20 degrees.
2. Breadth at toe as small as practical.
3. Thickness taper 1 in 3 to 10mm.

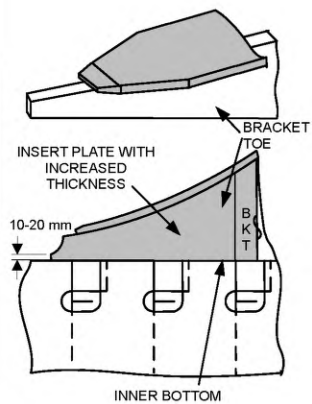

Factors which may have caused damage

1. Inadequate tapering the toe end.
2. Insufficient tapering of flange.
3. Lateral flexing of the bracket.

Notes on repairs

See Sketch.

OIL Tankers	Guidelines for Surveys, Assessment and Repair of Hull Structure	
Group 4	Cargo area	Example No.
	Web Frame in cargo tank	2
Detail of damage	Cross ties and their end connections	

Sketch of damage

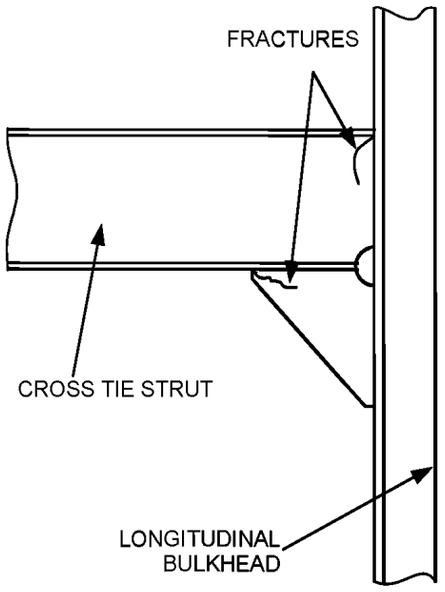

Sketch of repair

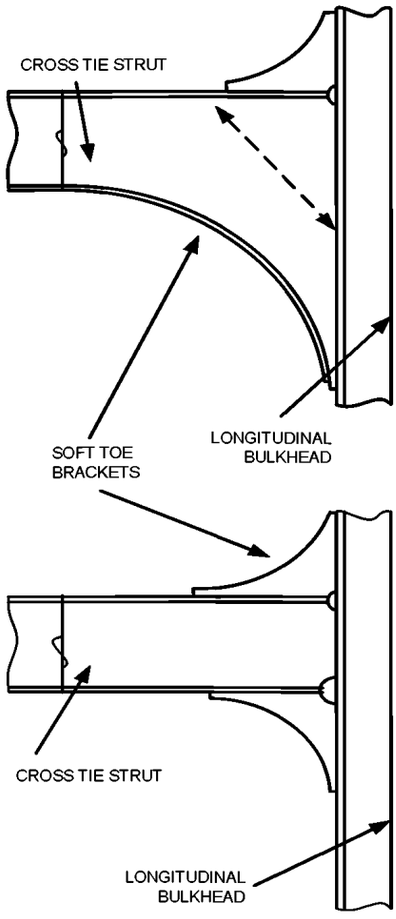

Factors which may have caused damage

1. Stress concentration due to unsuitable bracket shape at juncture of cross tie to longitudinal.
2. Inadequate panel stiffening of web plate of cross-tie.

Notes on repairs

See Sketch.

OIL Tankers	Guidelines for Surveys, Assessment and Repair of Hull Structure	
Group 4	Cargo area	Example No.
	Web Frame in cargo tank	3
Detail of damage	Buckled transverse web plates in way of cross tie.	

Sketch of damage

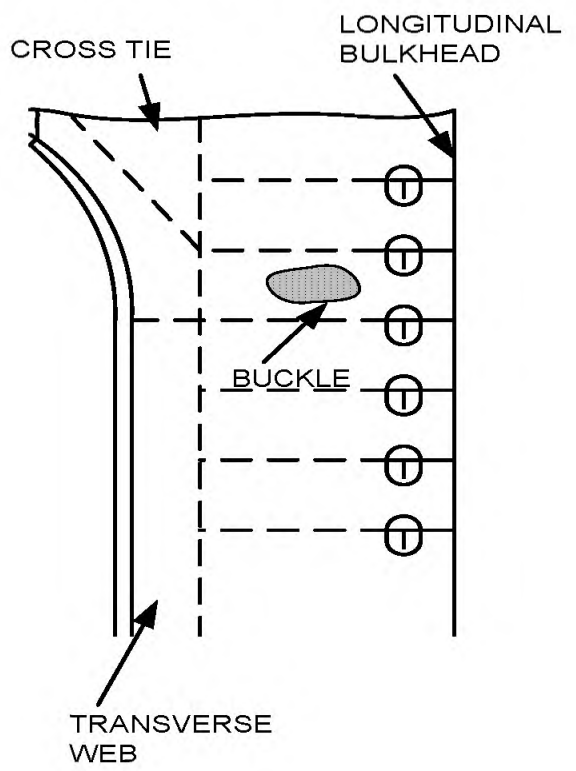

Sketch of repair

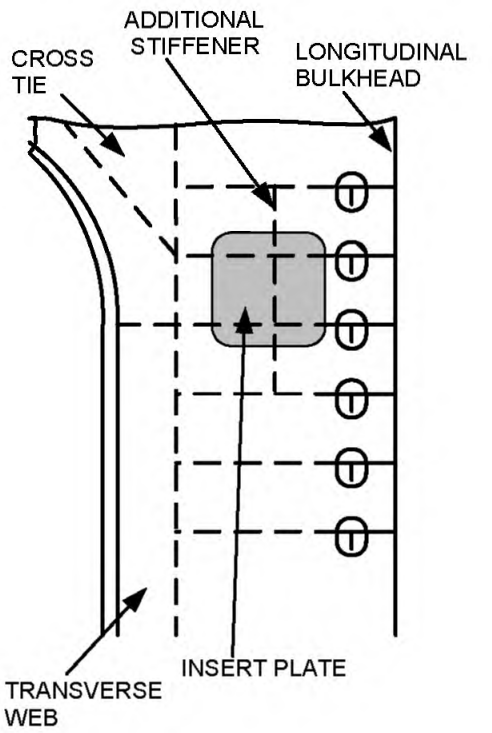

Factors which may have caused damage

1. Insufficient panel stiffening on transverse web.

Notes on repairs

See Sketch.

1. Depending upon size of deformation, additional stiffeners may be sufficient.

OIL Tankers	Guidelines for Surveys, Assessment and Repair of Hull Structure	
Group 4	Cargo area	Example No.
	Web Frame in cargo tank	4
Detail of damage	Cut-outs around transverse bracket end.	

Sketch of damage

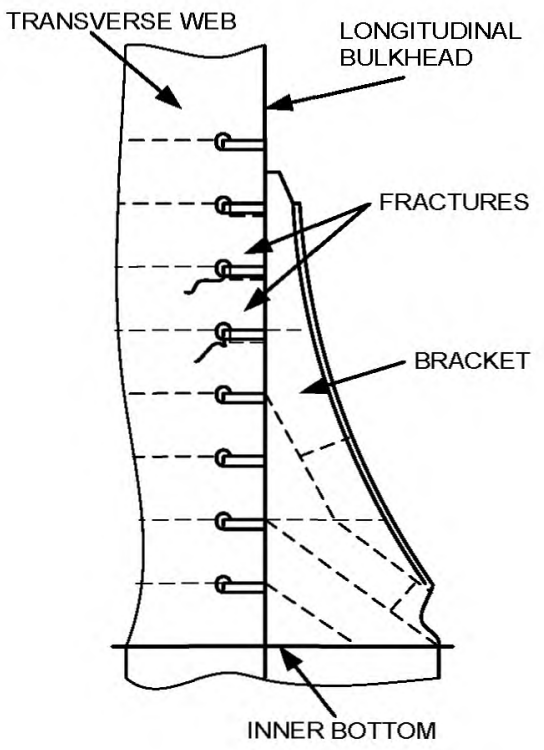

Sketch of repair

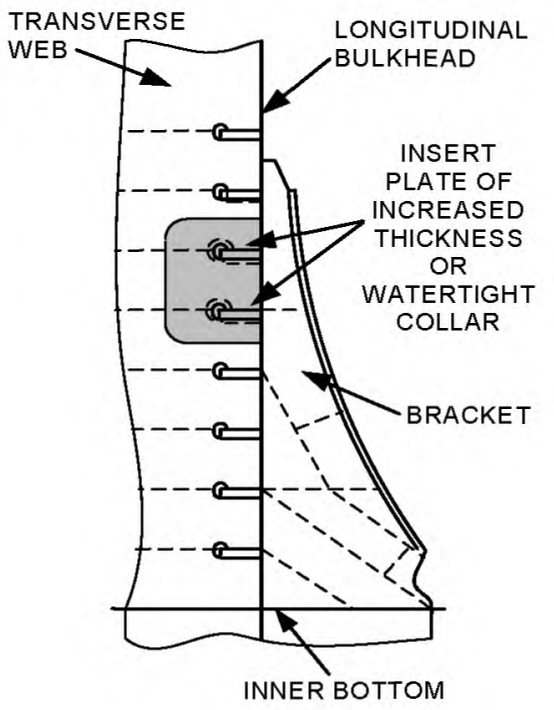

Factors which may have caused damage

1. High stresses at toe of bottom transverse end bracket.
2. Sharp corner at cut-out.

Notes on repairs

See Sketch.

OIL Tankers	Guidelines for Surveys, Assessment and Repair of Hull Structure	
Group 4	Cargo area	Example No.
	Web Frame in cargo tank	5
Detail of damage	Fracture in way of connection of transverse web tripping brackets to longitudinal	

Sketch of damage

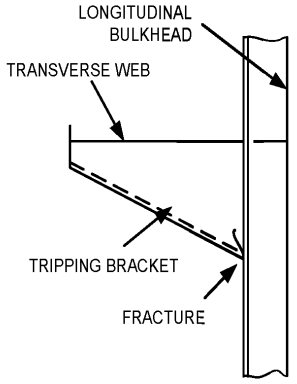

Sketch of repair

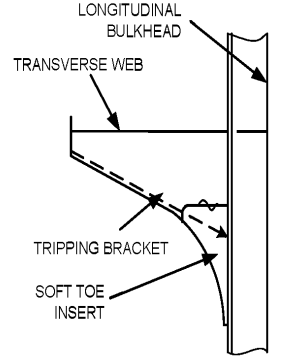

Factors which may have caused damage

1. Hard spot at the toe of bracket.
2. Vibration.

Notes on repairs

See Sketch.

1. Soft bracket may be added on upper side of web, to avoid fracture at the heel.

OIL Tankers	Guidelines for Surveys, Assessment and Repair of Hull Structure	
Group 4	Cargo area	Example No.
	Web Frame in cargo tank	6
Detail of damage	Tripping brackets modification of the bracket toe.	

Sketch of damage

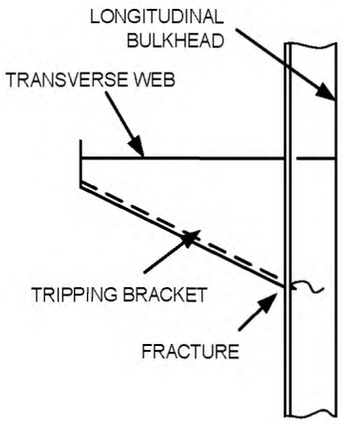

Sketch of repair

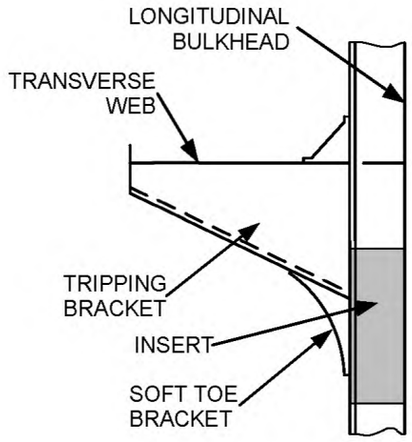

Factors which may have caused damage

1. Stress concentrations at toe of bracket.
2. High stress in longitudinal.

Notes on repairs

See Sketch.

1. Soft bracket may be added on upper side of web, to avoid fracture at the heel.

Group 5 Transverse Bulkheads in Cargo Tanks

Contents

1 General

2 What to look for - Bulkhead survey
- 2.1 Material wastage
- 2.2 Deformations
- 2.3 Fractures

3 What to look for - Stool survey
- 3.1 Material wastage
- 3.2 Deformations
- 3.3 Fractures

4 General comments on repair
- 4.1 Material wastage
- 4.2 Deformations
- 4.3 Fractures

Examples of structural detail failures and repairs – Group 5

Example No.	Title
1	Fracture in way of connection of transverse bulkhead stringer to transverse web frames and longitudinal bulkhead stringer
2	Horizontal stringer in way of longitudinal BHD cracked
3	Connection of longitudinals to horizontal stringers
4	Fractured inner bottom plate at the connection to access trunk wall
5	Bulkhead vertical web to deck and inner bottom
6	Vertically corrugated bulkhead without stool, connection to deck and inner bottom
7	Fracture at connection of vertically corrugated transverse bulkhead with stool to shelf plate and lower stool plate
8	Fracture at connection of lower stool plate to inner bottom tank. Lower stool plate connected to vertically corrugated transverse bulkhead
9	Fracture at connection of transverse bulkhead to knuckle inner bottom/girder

1 General

1.1 The transverse bulkheads at the ends of cargo tanks are oiltight bulkheads serving two main functions:
(a) As main transverse strength elements in the structural design of the ship.
(b) They are essentially deep tank bulkheads, which, in addition to the functions given in (a) above, are designed to withstand the head pressure of the full tank.

1.2 The bulkheads may be constructed as vertically corrugated with a lower stool, and with or without an upper stool. Alternatively plane bulkhead plating with one sided vertical stiffeners and horizontal stringers.

1.3 Heavy corrosion may lead to collapse of the structure under extreme load, if it is not rectified properly.

1.4 It is emphasised that appropriate access arrangement as indicated in **Chapter 4 Survey Programme, Preparation and Execution** of the guidelines should be provided to enable a proper close-up survey and thickness measurement as necessary.

2 What to look for – Bulkhead survey

2.1 Material wastage

2.1.1 Excessive corrosion may be found in the following locations:
(a) Bulkhead plating adjacent to the longitudinal bulkhead plating.
(b) Bulkhead plating and weld connections to the lower/upper stool shelf plates and inner bottom.

2.1.2 If coatings have broken down and there is evidence of corrosion, it is recommended that random thickness measurements be taken to establish the level of diminution.

2.1.3 When the periodical survey requires thickness measurements, or when the Surveyor deems necessary, it is important that the extent of the gauging be sufficient to determine the general condition of the structure.

2.2 Deformations

2.2.1 When the bulkhead has sustained serious uniform corrosion, the bulkhead may suffer shear buckling. Evidence of buckling may be indicated by the peeling of paint or rust. However, where deformation resulting from bending or shear buckling has occurred

on a bulkhead with a small diminution in thickness, this could be due to overloading and this aspect should be investigated before proceeding with repairs.

2.3 Fractures

2.3.1 Fractures usually occur at the boundaries of corrugations and bulkhead stools particularly in way of shelf plates, deck, inner bottom, etc.

3 What to look for – Stool survey

3.1 Material wastage

3.1.1 Excessive corrosion may be found on diaphragms, particularly at their upper and lower weld connections.

3.2 Fractures

3.2.1 Fractures observed at the connection between lower stool and corrugated bulkhead during stool survey may have initiated at the weld connection of the inside diaphragms (See **Example 7**).

3.2.2 Misalignment between bulkhead corrugation flange and sloping stool plating may also cause fractures at the weld connection of the inside diaphragms.

4 General comments on repair

4.1 Material wastage

4.1.1 When the reduction in thickness of plating and stiffeners has reached the diminution levels permitted by the Classification Society involved, the wasted plating and stiffeners are to be cropped and renewed.

4.2 Deformations

4.2.1 If the deformation is local and of a limited extent, it could generally be faired out. Deformed plating in association with a generalized reduction in thickness should be partly or completely renewed.

4.3 Fractures

4.3.1 Fractures that occur at the boundary weld connections as a result of latent weld defects should be veed-out, appropriately prepared and re-welded preferably using low hydrogen electrodes or equivalent.

4.3.2 For fractures other than those described in **4.3.1**, re-welding may not be a permanent solution and an attempt should be made to improve the design and construction in order to avoid a recurrence. Typical examples of such cases are as follows:

(a) Fractures in the weld connections of the stool plating to the shelf plate in way of the scallops in the stool's internal structure. The scallops should be closed by fitting lapped collar plates and the stool weld connections repaired as indicated in **4.3.1**. The lapped collar plates should have a full penetration weld connection to the stool and shelf plate and should be completed using low hydrogen electrodes prior to welding the collar to the stool diaphragm/bracket.

(b) Fractures in the weld connections of the corrugations and/or stool plate to the shelf plate resulting from misalignment of the stool plate and the flange of the corrugation (Similarly misalignment of the stool plate with the double bottom floor).

It is recommended that the structure be cut free, the misalignment rectified, and the stool, floor and corrugation weld connection appropriately repaired as indicated in **4.3.1**. Other remedies to such damages include fitting of brackets in the stool in line with the webs of the corrugations. In such cases both the webs of the corrugations and the brackets underneath are to have full penetration welds and the brackets are to be arranged without scallops. However, in many cases this may prove difficult to attain.

(c) Fractures in the weld connections of the corrugations to the hopper tank.

It is recommended that the weld connection be repaired as indicated in **4.3.1** and, where possible, additional stiffening be fitted inside the tanks to align with the flanges of the corrugations.

Group 5 Transverse Bulkheads in Cargo Tanks

OIL Tankers	Guidelines for Surveys, Assessment and Repair of Hull Structure	
Group 5	Cargo area	Example No.
	Transverse Bulkhead in cargo tank	1
Detail of damage	Fracture in way of connection of transverse bulkhead stringer to transverse web frames and longitudinal bulkhead stringer	

Sketch of damage

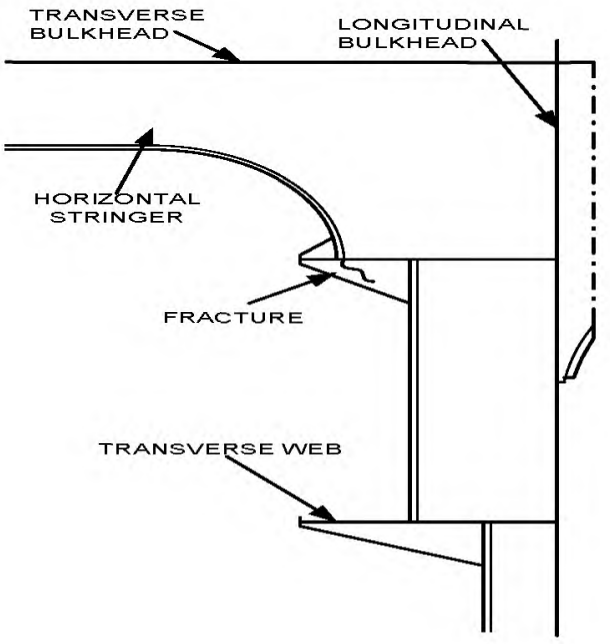

Sketch of repair

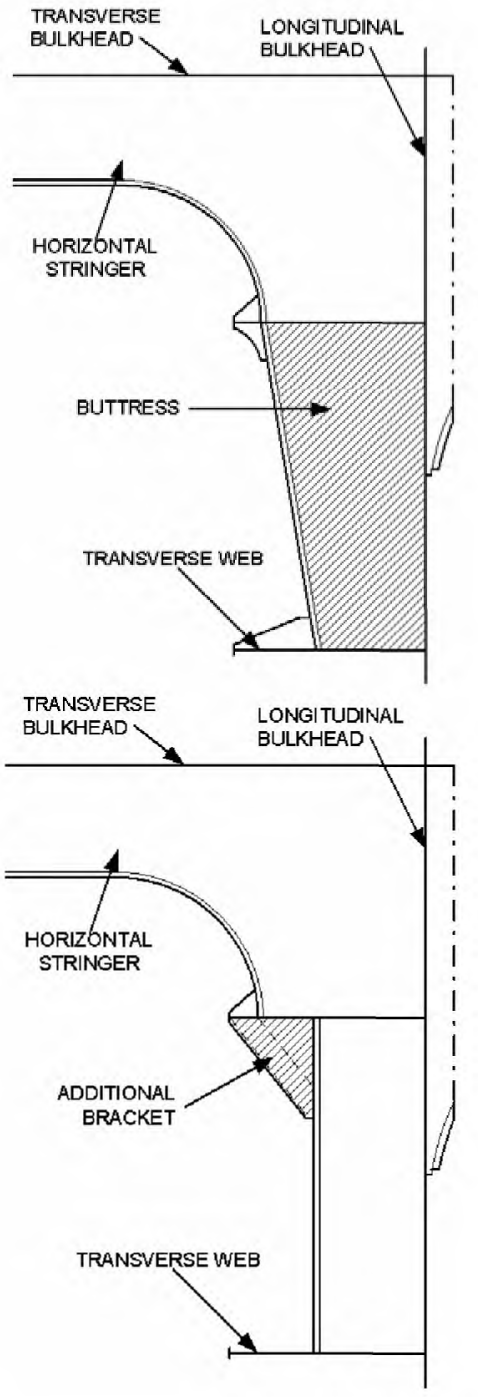

Factors which may have caused damage

1. Stress concentration due to discontinuous structure.
2. High shear stress in the horizontal stringer.

Notes on repairs

See Sketch.

OIL Tankers	Guidelines for Surveys, Assessment and Repair of Hull Structure	
Group 5	Cargo area	Example No.
	Transverse Bulkhead in cargo tank	2
Detail of damage	Horizontal stringer in way of longitudinal BHD cracked	

Sketch of damage

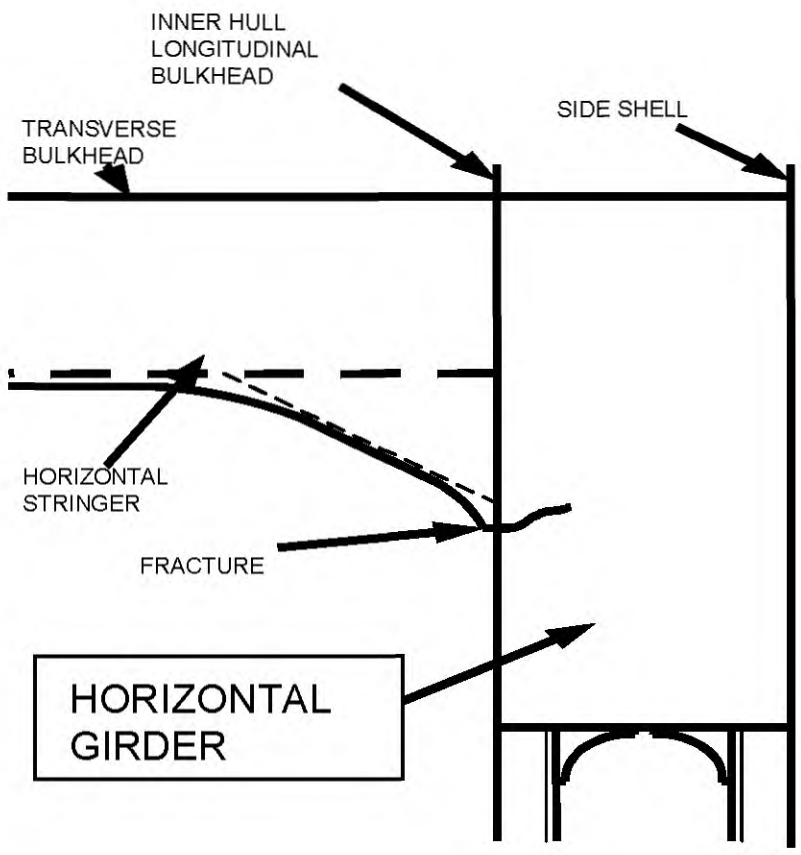

Sketch of repair

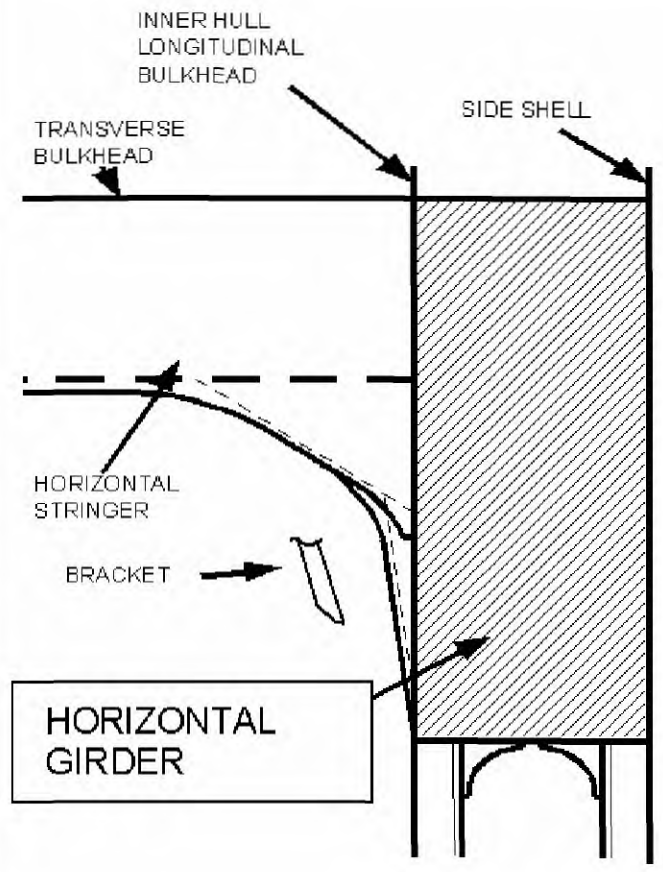

Factors which may have caused damage	Notes on repairs
1. Misalignment between bracket end and side girder in wing tank.	See Sketch.

OIL Tankers	Guidelines for Surveys, Assessment and Repair of Hull Structure	
Group 5	Cargo area	Example No.
	Transverse Bulkhead in cargo tank	3
Detail of damage	Connection of longitudinals to horizontal stringers.	

Sketch of damage

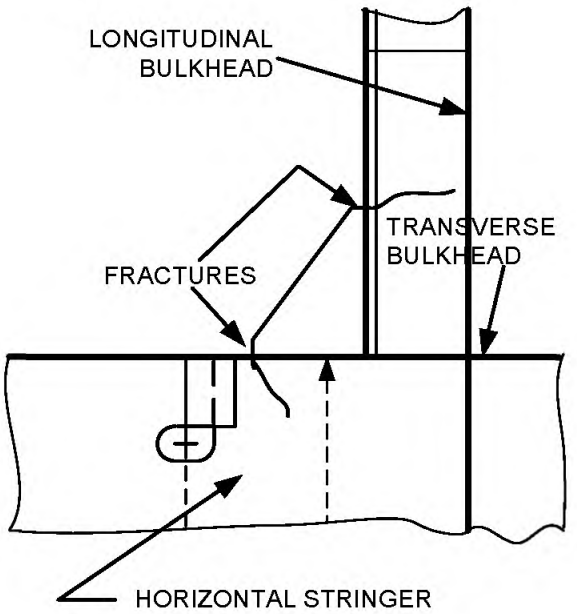

Sketch of repair

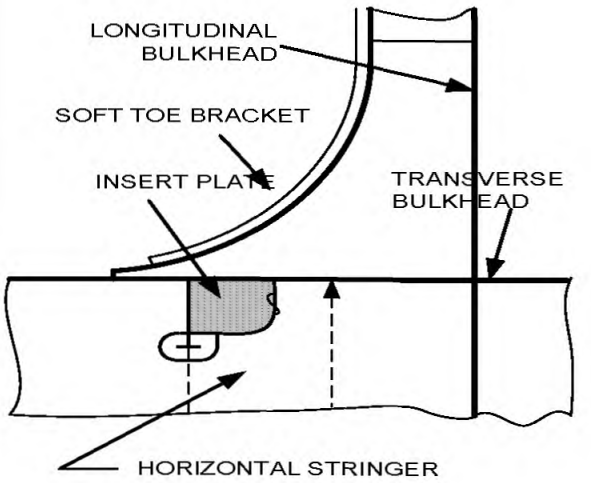

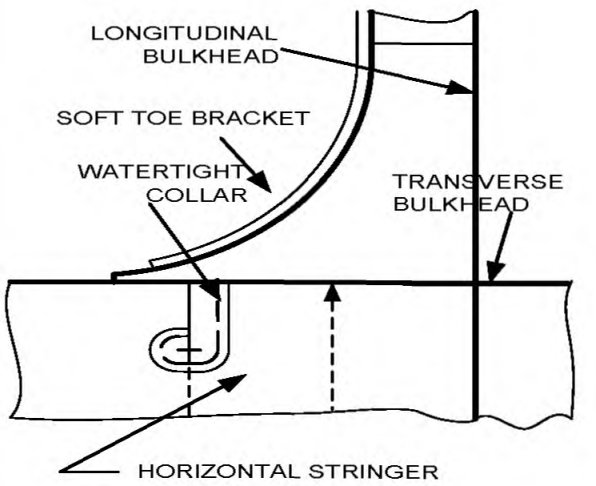

Factors which may have caused damage

1. Stress concentration due to inadequate shape of the bracket.
2. Relative deflection of adjoining transverse web against transverse bulkhead.

Notes on repairs

See Sketch

OIL Tankers	Guidelines for Surveys, Assessment and Repair of Hull Structure	
Group 5	Cargo area	Example No.
	Transverse Bulkhead in cargo tank	4
Detail of damage	Fractured inner bottom plate at the connection to access trunk wall	

Sketch of damage

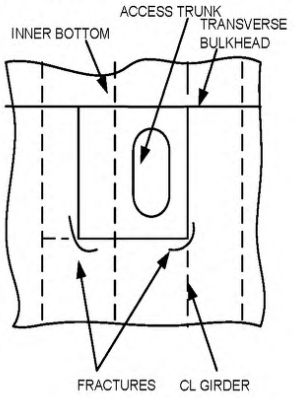

Sketch of repair

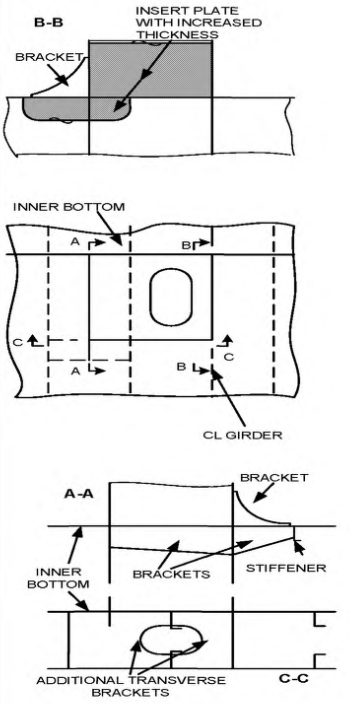

Factors which may have caused damage

1. Stress concentration at the connection of trunk wall to inner bottom plate.
2. Relative deformation between horizontal stringer fitted on transverse bulkhead and inner bottom plate.
3. Static and dynamic load of cargo liquid.

Notes on repairs

See Sketch.

OIL Tankers	Guidelines for Surveys, Assessment and Repair of Hull Structure	
Group 5	Cargo area	Example No.
	Transverse Bulkhead in cargo tank	5
Detail of damage	Bulkhead vertical web to deck and inner bottom	

Sketch of damage

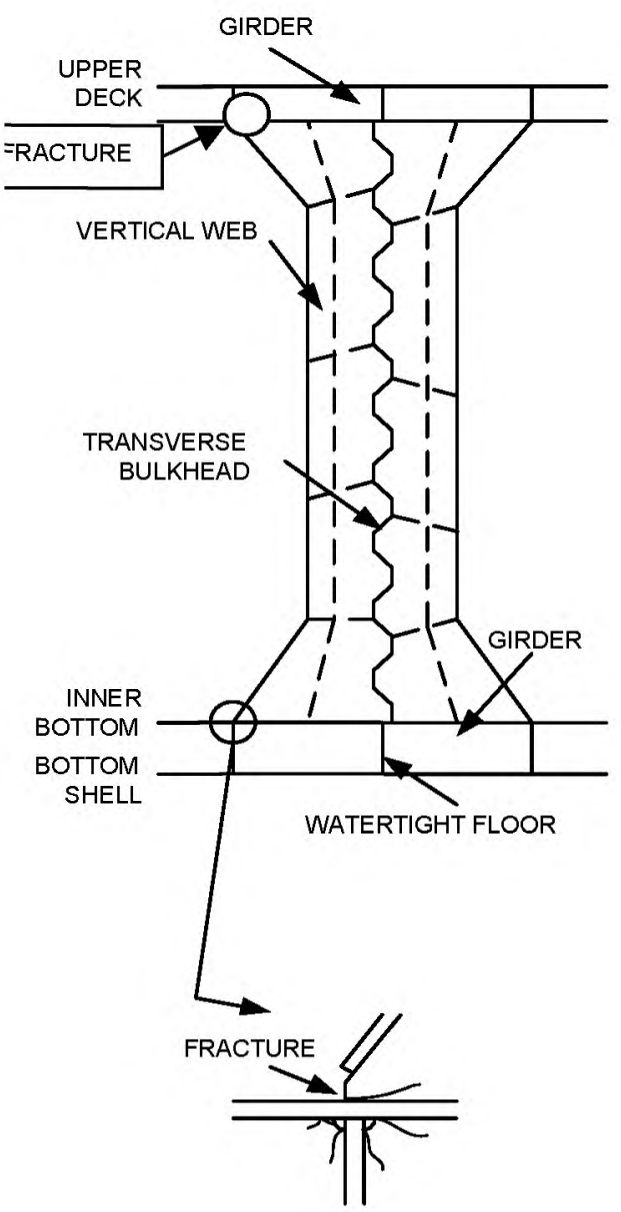

Sketch of repair

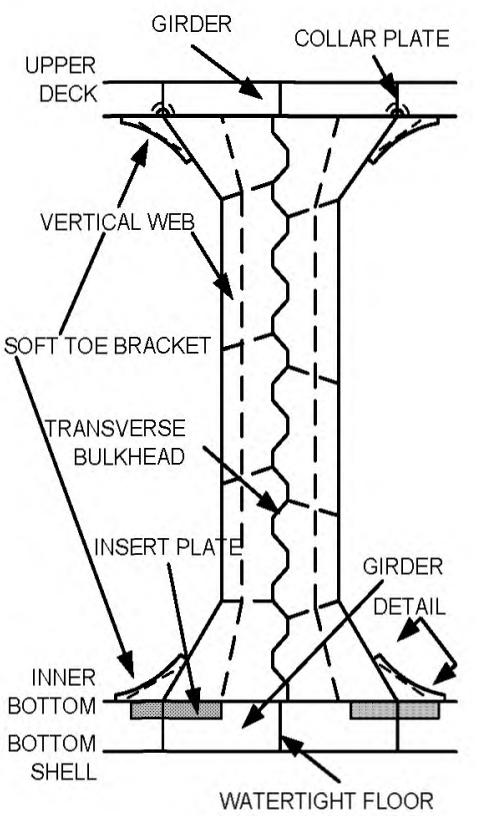

Factors which may have caused damage

1. Stress concentration at toe of bracket due to sniped face plate and scallop in way.

Notes on repairs

See Sketch.

OIL Tankers	Guidelines for Surveys, Assessment and Repair of Hull Structure	
Group 5	Cargo area	Example No.
	Transverse Bulkhead in cargo tank	6
Detail of damage	Vertically corrugated bulkhead without stool, connection to deck and inner bottom	

Sketch of damage

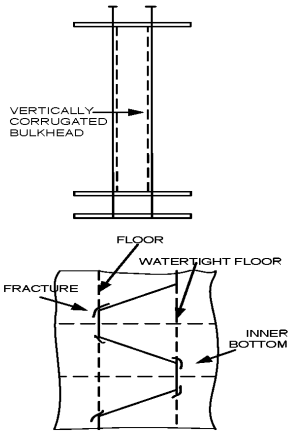

Sketch of repair

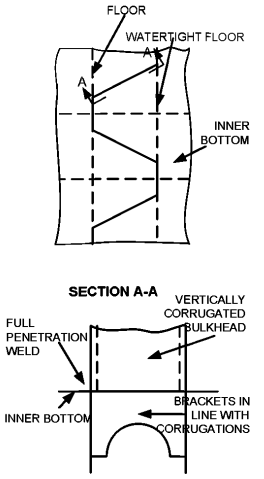

Factors which may have caused damage

1. Stress concentration due to unsupported corrugation web.
2. High through thickness stress, lamellar tearing.
3. Weld details and dimensions.
4. Misalignment between face of corrugation and floor underneath.
5. Cut-outs and scallops or air holes increasing the stress in the floor.
6. Insufficient through thickness properties of inner bottom plate.

Notes on repairs

See Sketch.

OIL Tankers	Guidelines for Surveys, Assessment and Repair of Hull Structure	
Group 5	Cargo area	Example No.
	Transverse Bulkhead in cargo tank	7
Detail of damage	Fracture at connection of vertically corrugated transverse bulkhead with stool to shelf plate and lower stool plate.	

Sketch of damage

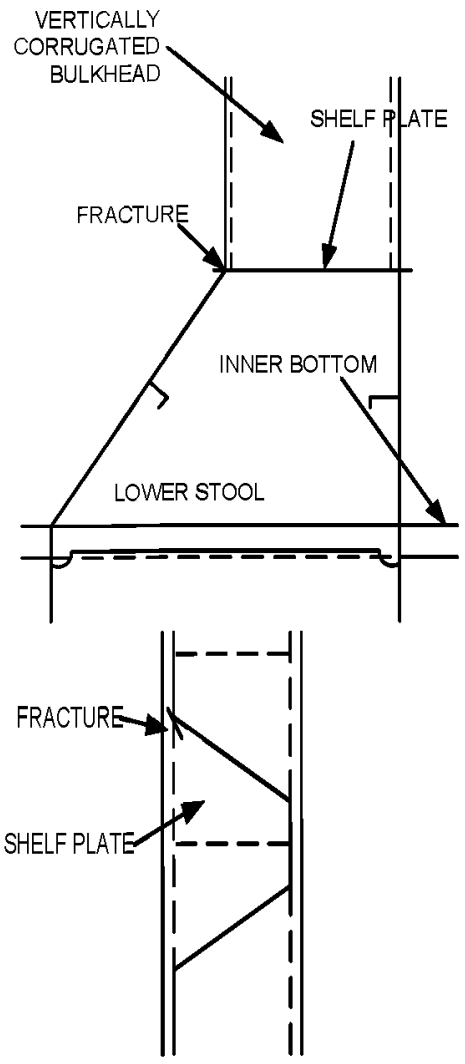

Sketch of repair

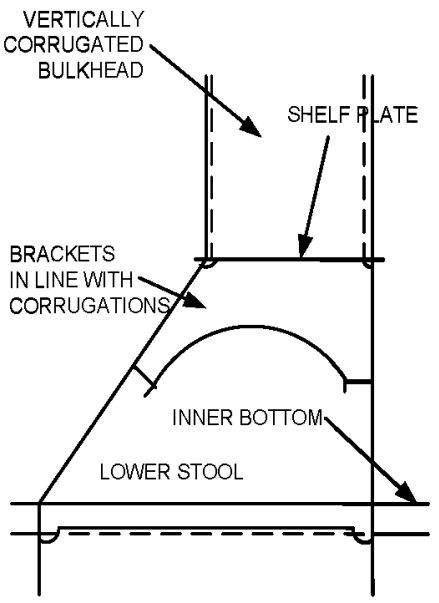

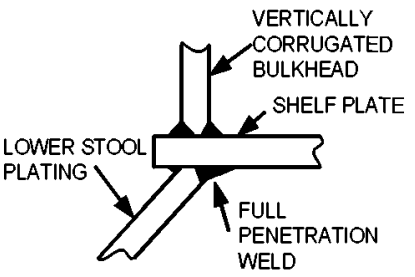

Factors which may have caused damage

1. Stress concentration due to unsupported corrugation web.
2. High through thickness stress, lamellar tearing.
3. Weld details and dimensions.
4. Misalignment.
5. Insufficient thickness of stool side plating in relation to corrugation flange thickness.

Notes on repairs

See Sketch.

OIL Tankers	Guidelines for Surveys, Assessment and Repair of Hull Structure	
Group 5	Cargo area	Example No.
	Transverse Bulkhead in cargo tank	8
Detail of damage	Fracture at connection of lower stool plate to inner bottom tank. Lower stool plate connected to vertically corrugated transverse bulkhead.	

Sketch of damage

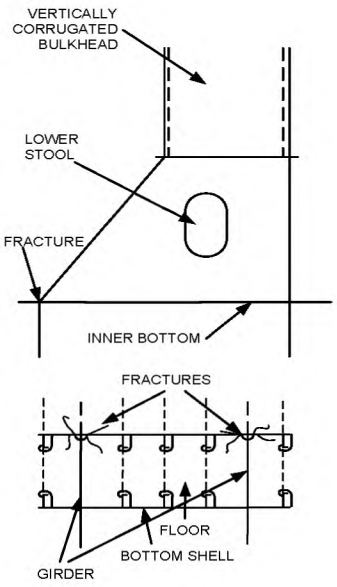

Sketch of repair

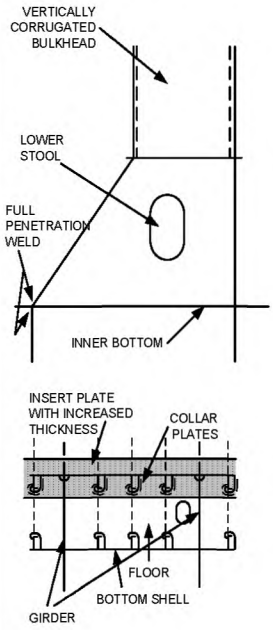

Factors which may have caused damage

1. Misalignment between stool side plating and floor and/or stool webs and girders of double bottom.
2. Insufficient thickness of floor compared to stool thickness.
3. Scallops, cut-outs, air hole reducing the connecting area too much.
4. Weld details and dimensions.
5. Lamellar tearing of inner bottom plating.

Notes on repairs

See Sketch.

OIL Tankers	Guidelines for Surveys, Assessment and Repair of Hull Structure	
Group 5	Cargo area	Example No.
	Transverse Bulkhead in cargo tank	9
Detail of damage	Fracture at connection of transverse bulkhead to knuckle inner bottom/girder	

Sketch of damage

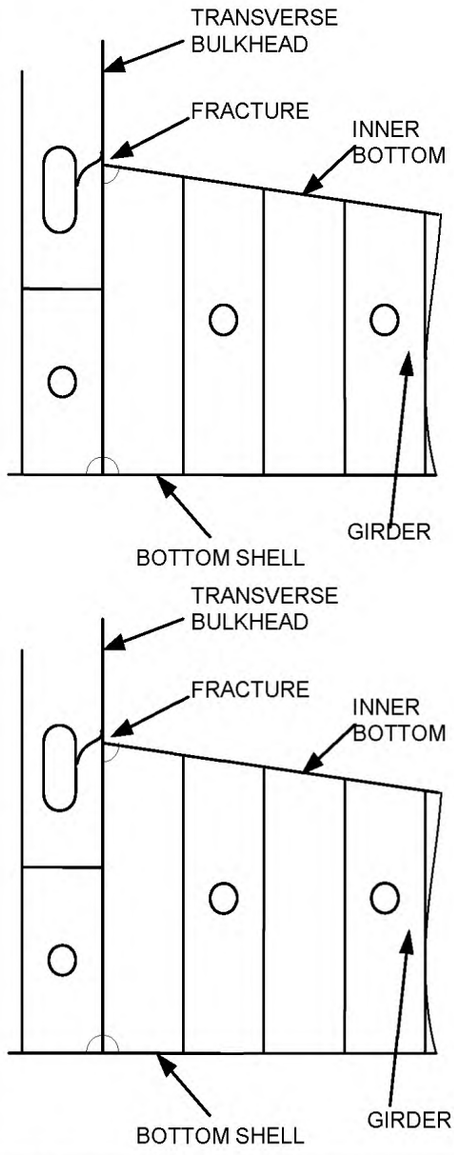

Sketch of repair

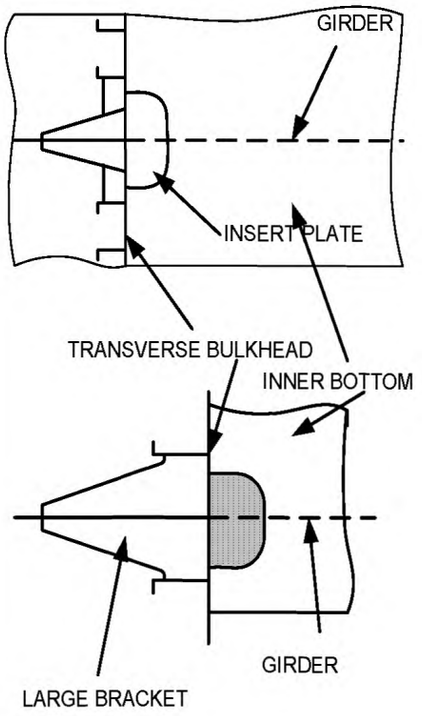

Factors which may have caused damage

1. High stress concentration.
2. Discontinuity of structural members at knuckle joint.

Notes on repairs

See Sketch.

Group 6 Deck Structure

Contents

1 General

2 What to look for on deck
2.1 Material wastage
2.2 Deformations
2.3 Fractures

3 What to look for underdeck
3.1 Material wastage
3.2 Deformations
3.3 Fractures

4 General comments on repair
4.1 Material wastage
4.2 Deformations
4.3 Fractures
4.4 Miscellaneous

Examples of structural detail failures and repairs – Group 6

Example No.	Title
1	Deformed and fractured deck plating around tug bitt
2	Fracture at ends of deck transverse
3	Fractured deck longitudinal tripping bracket at intercostals deck girders
4	Fractured deck plating in crane pedestal support (midships)
5	Fractured deck plating in way of deck pipe support stanchions (midships)

1 General

1.1 Deck structure is subjected to longitudinal hull girder bending, caused by cargo distribution and wave actions. Moreover deck structure may be subjected to severe load due to green sea on deck. Certain areas of the deck may also be subjected to additional compressive stresses caused by slamming or bow flare effect at the fore ship in heavy weather.

1.2 The marine environment, the humid atmosphere due to the water vapour from the cargo in cargo tanks, sulphur contained in the cargo and the high temperature on deck plating due to heating from the sun may result in accelerated corrosion of plating and stiffeners making the structure more vulnerable to the exposures described above.

2 What to look for on deck

2.1 Material wastage

2.1.1 General corrosion of the deck structure may be observed by visual inspection. Special attention should be paid to areas where pipes, e.g. cargo piping, COW piping, fire main pipes, hydraulic pipes, etc are fitted close to the plating, making proper maintenance of the protective coating difficult to carry out.

2.1.2 Grooving corrosion is often found in or beside welds, especially in the heat affected zone. This corrosion is sometimes referred to as 'inline pitting attack' and can also occur on vertical members and flush sides of bulkheads in way of flexing. The corrosion is caused by the galvanic current generated from the difference of the metallographic structure between the heat affected zone and base metal. Coating of the welds is generally less effective compared to other areas due to roughness of the surface, which exacerbates the corrosion. Grooving corrosion may lead to stress concentrations and further accelerate the corrosion process. Grooving corrosion may be found in the base material where coating has been scratched or the metal itself has been mechanically damaged.

2.1.3 Pitting corrosion may occur throughout the deck plating. The combination of accumulated water with scattered residue of certain cargoes may create a corrosive reaction.

2.2 Deformations

2.2.1 Plate buckling (between stiffeners) may occur in areas subjected to in-plane compressive stresses, in particular if corrosion is in evidence. Special attention should be

paid to areas where the compressive stresses are perpendicular to the direction of the stiffening system.

2.2.2 Deformed structure may be observed in areas of the deck plating. In exposed deck area, in particular deck forward, deformation of structure may result from shipping green water.

2.3 Fractures

2.3.1 Fractures in areas of structural discontinuity and stress concentration will normally be detected by close-up survey. Special attention should be given to the structures at cargo hatches in general and to corners of deck openings in particular.

2.3.2 Fractures initiated in the deck plating may propagate across the deck resulting in serious damage to hull structural integrity.

2.3.3 Main deck areas subject to high concentration of stress especially in way of bracket toe and heel connections of the loading/discharge manifold supports to main deck are to be close up examined for possible fractures. Similarly the main deck in way of the areas of the stanchion supports to main deck of the hose saddles should be close up examined for possible fractures due to the restraints caused by the long rigid hose saddle structure.

3 What to look for underdeck

3.1 Material wastage

3.1.1 The level of wastage of under-deck stiffeners may have to be established by means of thickness measurements. The combined effect of the marine environment and the high humidity atmosphere within wing ballast tanks and cargo tanks will give rise to a high corrosion rate.

3.2 Deformations

3.2.1 Buckling should be looked for in the primary supporting structure. Such buckling may be caused by:

(a) Loading deviated from loading manual.
(b) Excessive sea water pressure in heavy weather.
(c) Sea water on deck in heavy weather.
(d) Combination of these causes.

3.2.2 Improper ventilation during ballasting/de-ballasting of ballast tanks or venting of cargo tanks may cause deformation in deck structure. If such deformation is observed, internal survey of the affected tanks should be carried out in order to confirm the nature and the extent of damage.

3.3 Fractures

3.3.1 Fractures may occur at the connection between the deck plating, transverse bulkhead and girders/stiffeners. This is often associated with a reduction in area of the connection due to corrosion.

3.3.2 Fatigue fractures may also occur in way of the underdeck longitudinals bracket toes directly beneath deck handling cranes, if fitted. Fractures may initiate at the deck longitudinal flange at the termination of the bracket toe and propagated through the deck longitudinal web plate. The crack may also penetrate the deck plating if allowed to propagate.

4 General comments on repair

4.1 Material wastage

4.1.1 In the case of grooving corrosion at the transition between two plate thicknesses consideration should be given to renewal of part of, or the entire deck plate.

4.1.2 In the case of pitting corrosion on the deck plating, consideration should be given to renewal of part of or the entire affected deck plate.

4.1.3 When heavy wastage is found on under-deck structure, the whole or part of the structure may be cropped and renewed depending on the permissible diminution levels allowed by the Classification Society concerned.

4.2 Deformations

4.2.1 When buckling of the deck plating has occurred, appropriate reinforcement is necessary in addition to cropping and renewal regardless of the corrosion condition of the plating.

4.3 Fractures

4.3.1 Fractured areas in the main deck plating should be cropped and inserted using good marine practice. The cause of the fracture should be determined because other measures in addition to cropping and inserting may be needed to prevent re-occurrence.

4.4 Miscellaneous

4.4.1 Main deck plating in way of miscellaneous equipment such as cleats, chocks, rollers, hose rails, mooring winches, etc. should be examined for possible defects.

Group 6 Deck Structure

OIL Tankers	Guidelines for Surveys, Assessment and Repair of Hull Structure	
Group 6	Deck Structure	Example No. 1
Detail of damage	Deformed and fractured deck plating around tug bitt	

Sketch of damage

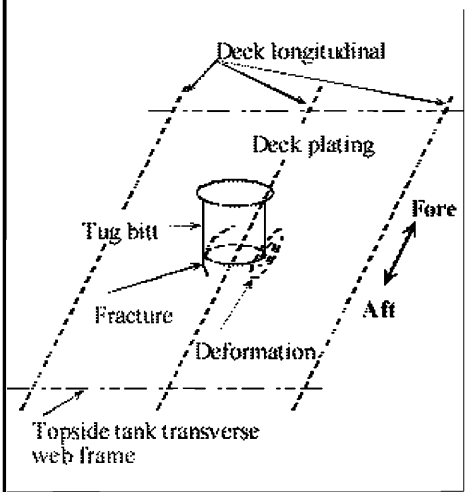

Sketch of repair

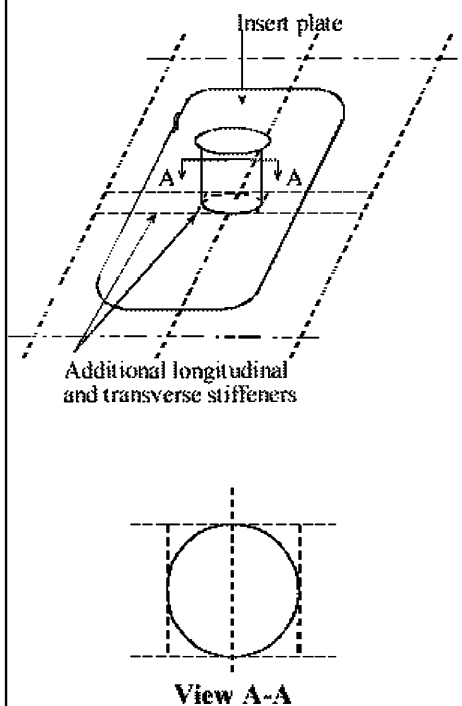

Factors which may have caused damage

1. Insufficient strength

Notes on repairs

1. Fractured/deformed deck plating should be cropped and part renewed.
2. Reinforcement by stiffeners should be considered.

OIL Tankers	Guidelines for Surveys, Assessment and Repair of Hull Structure	
Group 6	Deck Structure	Example No. 2
Detail of damage	Fracture at ends of deck transverse	

Sketch of damage

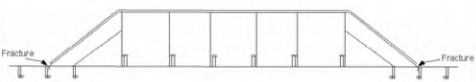

Sketch of repair

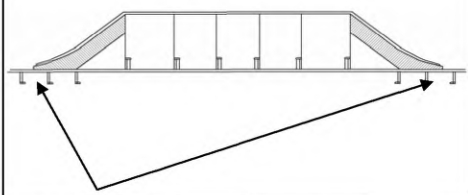

Under deck transverse is to be described as mentioned in the following "Note on repairs".
"Increase bracket length to end between under deck longitudinals and align end to under deck transverse."

Factors which may have caused damage

1. High stress due to toes bracket ending at cut out for longitudinal.

Notes on repairs

See Sketch.

1. Increase bracket length to end between underdeck longitudinals and align end to underdeck transverse.
2. Install fitted collar rather than lapped collar.
3. Insert deck plating if fracture extends into deck.

OIL Tankers	Guidelines for Surveys, Assessment and Repair of Hull Structure	
Group 6	Deck Structure	Example No.
		3
Detail of damage	Fractured deck longitudinal tripping bracket at intercostals deck girders	

Sketch of damage



Sketch of repair

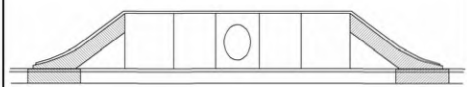

Factors which may have caused damage

1. Fractures due to inadequate end bracket to deck plate resulting in high nominal stress.

Notes on repairs

See Sketch.

1. Taper face plate

OIL Tankers	Guidelines for Surveys, Assessment and Repair of Hull Structure	
Group 6	Deck Structure	Example No. 4
Detail of damage	Fractured deck plating in crane pedestal support (midships)	

Sketch of damage

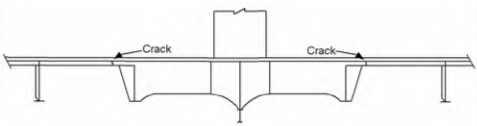

Sketch of repair

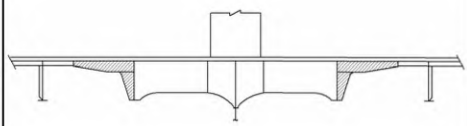

Factors which may have caused damage

1. High stress concentrations at the bracket toes.

Notes on repairs

1. Deck plate insert to be thicker than original.
2. Soft brackets may also be used.

OIL Tankers	Guidelines for Surveys, Assessment and Repair of Hull Structure	
Group 6	Deck Structure	Example No.
		5
Detail of damage	Fractured deck plating in way of deck pipe support stanchions (midships)	

Sketch of damage

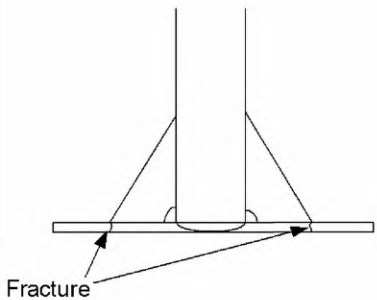

Sketch of repair

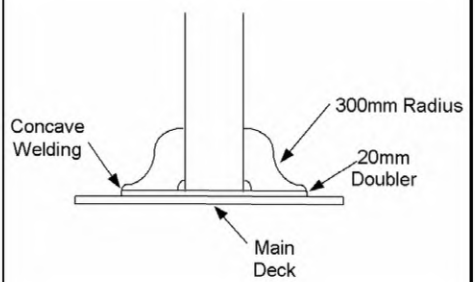

Factors which may have caused damage

1. Stanchions experience more severe relative displacements from hull girder bending.

Notes on repairs

See Sketch.

Group 7 Fore and Aft End Regions

- Area 1 Fore End Structure
- Area 2 Aft End Structure

Area 1 Fore End Structure

Contents

1 General

2 What to look for
2.1 Material wastage
2.2 Deformations
2.3 Fractures

3 General comments on repair
3.1 Material wastage
3.2 Deformations
3.3 Fractures

Examples of structural detail failures and repairs – Group 7

Example No.	Title
1	Fracture in forecastle deck plating at bulwark
2	Fractures in side shell plating in way of chain locker
3	Fractures and deformation of bow transverse web in way of cut-outs for side longitudinals
4	Fractured vertical web at the longitudinal stiffener ending in way of the parabolic bow structure.
5	Fractured stringer end connection in way of the parabolic bow structure
6	Fracture at end of longitudinal at bow structure.
7	Fracture and buckle of bow transverse web frame in way of longitudinal cut-outs
8	Buckled and tripped breasthooks

1 General

1.1 Due to the high humidity salt water environment, wastage of the internal structure in the forepeak ballast tank can be a major problem for many, and in particular ageing ships. Corrosion of structure may be accelerated where the tank is not coated or where the protective coating has not been properly maintained, and can lead to fractures of the internal structure and the tank boundaries.

1.2 Deformation can be caused by contact, which can result in damage to the internal structure leading to fractures in the shell plating.

1.3 Fractures of internal structure in the fore peak tank and spaces can also result from wave impact load due to slamming and panting.

1.4 Forecastle structure is exposed to green water and can suffer damage such as deformation of deck structure, deformation and fracture of bulwarks and collapse of mast, etc.

1.5 Shell plating around anchor and hawse pipe may suffer corrosion, deformation and possible fracture due to movement of improperly stowed anchor.

2 What to look for

2.1 Material wastage

2.1.1 Wastage (and possible subsequent fractures) is more likely to be initiated at the locations as indicated in **Figure 1** and particular attention should be given to these areas. A close-up survey should be carried out with selection of representative thickness measurements to determine the extent of corrosion.

2.1.2 Structure in chain locker is liable to have heavy corrosion due to mechanical damage to the protective coating caused by the action of anchor chains. In some ships, especially smaller ships, the side shell plating may form boundaries of the chain locker and heavy corrosion may consequently result in holes in the side shell plating.

2.2 Deformations

2.2.1 Contact with quay sides and other objects can result in large deformations and fractures of the internal structure. This may affect the watertight integrity of the tank boundaries and collision bulkhead. A close-up survey of the damaged area should be carried out to determine the extent of the damage.

2.3 Fractures

2.3.1 Fractures in the fore peak tank are normally found by close-up survey of the internal structure.

2.3.2 Fractures are often found in transition region and reference should be made to examples provided in the other Groups.

2.3.3 Fractures that extend through the thickness of the plating or through the boundary welds may be observed during pressure testing of tanks.

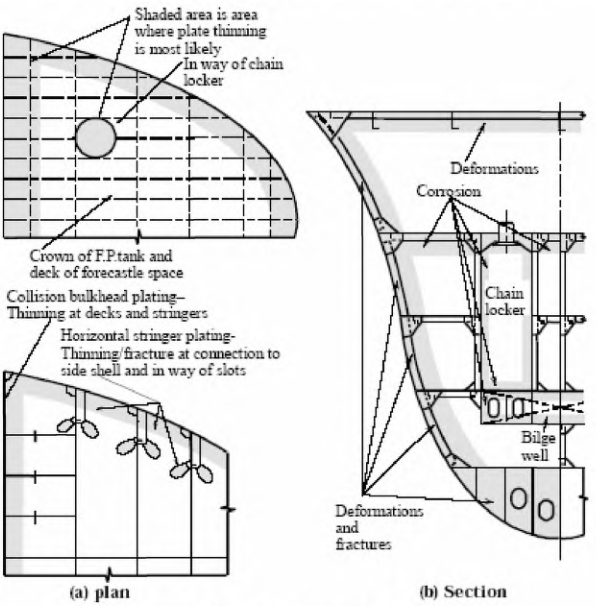

Fig 1 Fore end structure - Potential problem areas

3 General comments on repair

3.1 Material wastage

3.1.1 The extent of steel renewal required can be established based on representative thickness measurements. Where part of the structure has deteriorated to the permissible minimum thickness, then the affected area is to be cropped and renewed. Repair work in tanks requires careful planning in terms of accessibility.

3.2 Deformations

3.2.1 Deformed structure caused by contact should be cropped and part renewed or faired in place depending on the nature and extent of damage.

3.3 Fractures

3.3.1 Fractures of a minor nature may be veed-out and rewelded. Where cracking is more extensive, the structure is to be cropped and renewed. In the case of fractures caused by sea loads, increased thickness of plating and/or design modification to reduce stress concentrations should be considered (See Examples 1 and 5).

Group 7 Area 1 Fore End Structure

OIL Tankers	Guidelines for Surveys, Assessment and Repair of Hull Structure	
Group 7	Fore region	Example No.
Area 1	Forecastle	1
Detail of damage	Fracture in forecastle deck plating at bulwark	

Sketch of damage

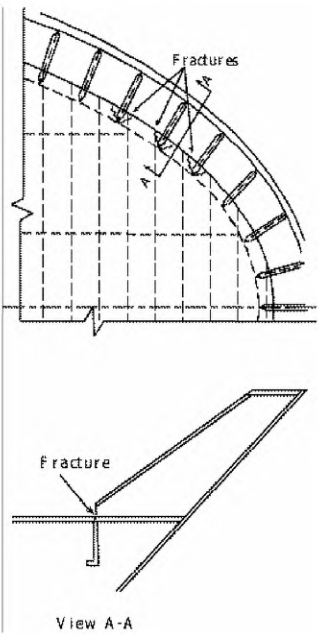

Sketch of repair

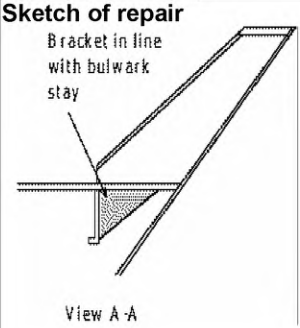

Factors which may have caused damage

1. Bow Flare effect in heavy weather.
2. Stress concentration due to poor design.

Notes on repairs

1. Fractured deck plating should be cropped and renewed.
2. Bracket in line with the bulwark stay to be fitted to reduce stress concentration.

OIL Tankers	Guidelines for Surveys, Assessment and Repair of Hull Structure	
Group 7	Fore region	Example No.
Area 1	Chain locker	2
Detail of damage	Fractures in side shell plating in way of chain locker	

Sketch of damage

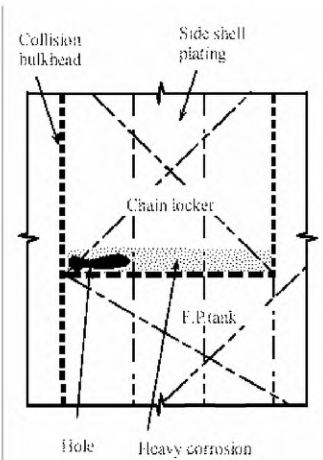

Sketch of repair

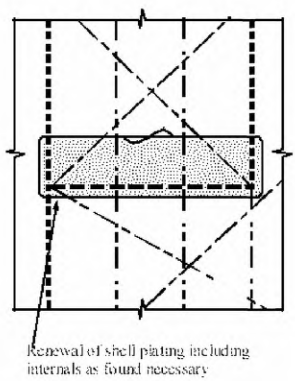

Factors which may have caused damage

1. Heavy corrosion in region where mud is accumulated.

Notes on repairs

1. Corroded plating should be cropped and renewed.
2. Protective coating should be applied.

OIL Tankers	Guidelines for Surveys, Assessment and Repair of Hull Structure	
Group 7	Fore region	Example No.
Area 1	Forepeak ballast tank	3
Detail of damage	Fractures and deformation of bow transverse webs in way of cut-outs for side longitudinals	

Sketch of damage

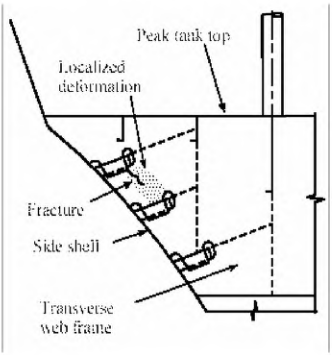

Sketch of repair

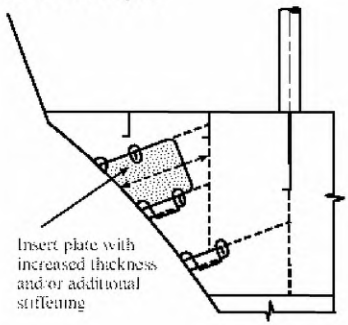

Factors which may have caused damage

1. Localized material wastage in way of coating failure at cut-outs and sharp edges due to working of the structure.
2. Dynamic seaway loading in way of bow flare.

Notes on repairs

1. Sufficient panel strength to be provided to absorb the dynamic loads enhanced by bow flare shape.

OIL Tankers	Guidelines for Surveys, Assessment and Repair of Hull Structure	
Group 7	Fore region	Example No.
Area 1	Forepeak ballast tank	4
Detail of damage	Fractured vertical web at the longitudinal stiffener ending in way of the parabolic bow structure.	

Sketch of damage

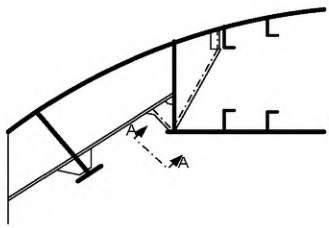

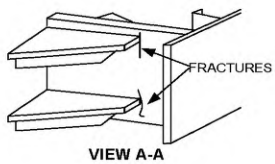

VIEW A-A

Sketch of repair

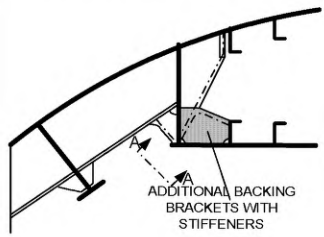

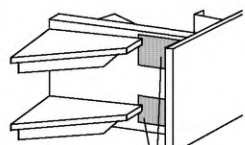

VIEW A-A

Factors which may have caused damage

1. Stress concentrations at bracket ending due to inadequate support at bracket toes in way of connection to web frame members.
2. Localised thinning in way of coating failure at bracket endings due to flexing of the structure.
3. Dynamic seaway loadings at bow causing flexing at bracket endings.

Notes on repairs

See Sketch.

OIL Tankers	Guidelines for Surveys, Assessment and Repair of Hull Structure	
Group 7	Fore region	Example No.
Area 1	Forepeak ballast tank	5
Detail of damage	Fractured stringer end connection in way of the parabolic bow structure	

Sketch of damage

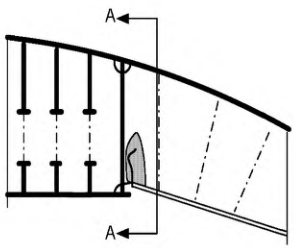

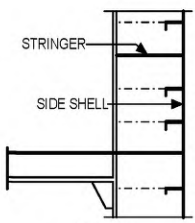

VIEW A-A

Sketch of repair

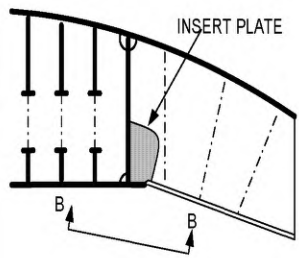

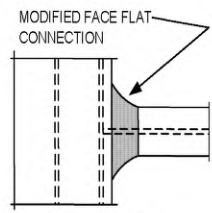

VIEW B-B

Factors which may have caused damage

1. High stress concentration of stringer to stiff girder/deep web intersection due to discontinuity of faceplate.
2. Localised thinning in way of coating failure at stringer connection due to flexing of the structure.
3. Dynamic seaway loadings at bow causing flexing in way of detail.

Notes on repairs

See Sketch.

OIL Tankers	Guidelines for Surveys, Assessment and Repair of Hull Structure	
Group 7	Fore region	Example No.
Area 1	Forepeak ballast tank	6
Detail of damage	Fracture at end of longitudinal at bow structure.	

Sketch of damage

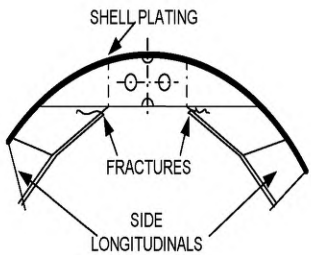

Sketch of repair

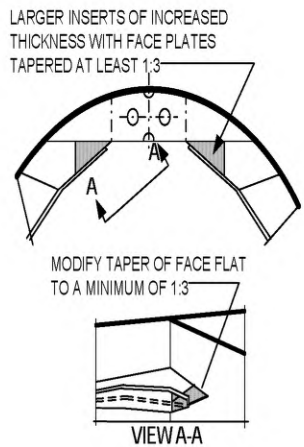

Factors which may have caused damage

1. Inadequate brackets forming the longitudinal endings at bow structure.
2. Localised thinning in way of coating failure at longitudinal endings due to flexing of the structure.
3. Dynamic seaway loadings at bow causing flexing at longitudinal endings.

Notes on repairs

See Sketch.

OIL Tankers	Guidelines for Surveys, Assessment and Repair of Hull Structure	
Group 7	**Fore region**	**Example No.**
Area 1	**Forepeak ballast tank**	**7**
Detail of damage	Fracture and buckle of bow transverse web frame in way of longitudinal cut-outs.	

Sketch of damage

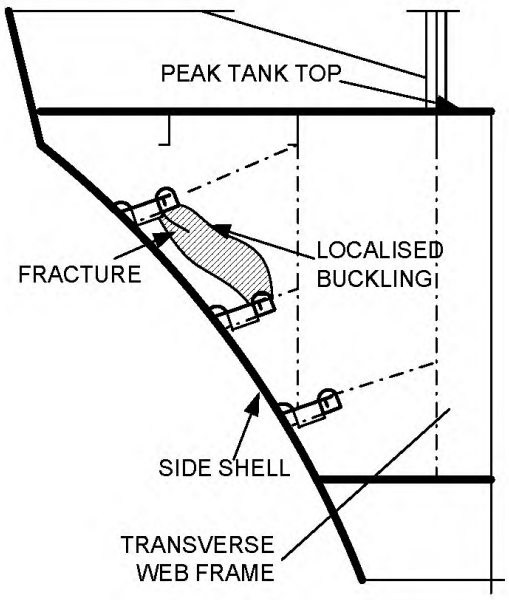

Sketch of repair

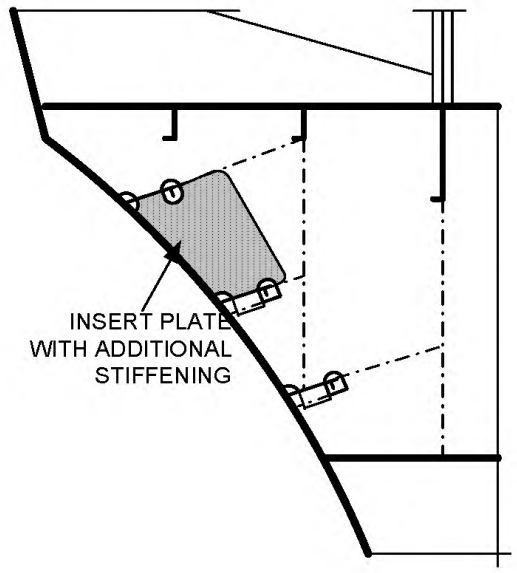

Factors which may have caused damage

1. Localised thinning in way of coating failure at cut-outs and sharp edges due to working of the structure.
2. Dynamic seaway loadings in way of bow flare.

Notes on repairs

See Sketch.

OIL Tankers	Guidelines for Surveys, Assessment and Repair of Hull Structure	
Group 7	Fore region	Example No.
Area 1	Fore peak ballast tank	8
Detail of damage	Buckled and tripped breasthooks	

Sketch of damage

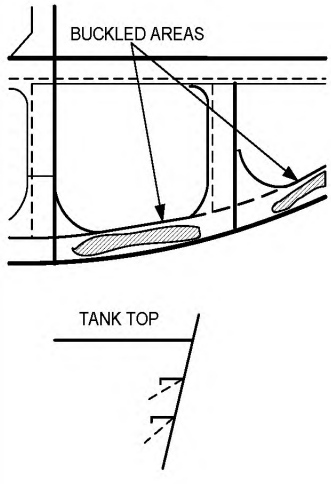

Sketch of repair

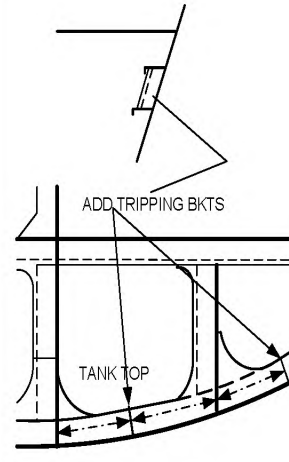

Factors which may have caused damage

1. Bow impact load.
2. Low buckling resistance.

Notes on repairs

See Sketch.

Area 2 Aft End Structure

Contents

1 General

2 What to look for
- 2.1 Material wastage
- 2.2 Deformations
- 2.3 Fractures

3 General comments on repair
- 3.1 Material wastage
- 3.2 Deformations
- 3.3 Fractures

Examples of structural detail failures and repairs – Group 7

Example No.	Title
9	Fractures in bulkhead in way of rudder trunk
10	Fractures at the connection of floors and girders/side brackets
11	Machinery space outside engine room
12	Machinery space outside engine room

1 General

1.1 Due to the high humidity salt water environment, wastage of the internal structure in the aft peak ballast tank can be a major problem for many, and in particular ageing, ships. Corrosion of structure may be accelerated where the tank is not coated or where the protective coating has not been properly maintained, and can lead to fractures of the internal structure and the tank boundaries.

1.2 Deformation can be caused by contact or wave impact action from astern (which can result in damage to the internal structure leading to fractures in the shell plating).

1.3 Fractures to the internal structure in the aft peak tank and spaces can also result from main engine and propeller excited vibration.

2 What to look for

2.1 Material wastage

2.1.1 Wastage (and possible subsequent fractures) is more likely to be initiated at in the locations as indicated in **Figure 1**. A close-up survey should be carried out with selection of representative thickness measurements to determine the extent of corrosion. Particular attention should be given to bunker tank boundaries and spaces adjacent to heated engine room.

2.2 Deformations

2.2.1 Contact with quay sides and other objects can result in large deformations and fractures of the internal structure. This may affect the watertight integrity of the tank boundaries and bulkheads. A close-up examination of the deformed area should be carried out to determine the extent of the damage.

2.3 Fractures

2.3.1 Fractures in weld at floor connections and other locations in the aft peak tank and rudder trunk space can normally only be found by close-up survey.

2.3.2 The structure supporting the rudder carrier may fracture and/or deform due to excessive load on the rudder. Bolts connecting the rudder carrier to the steering gear flat may also suffer damage under such load.

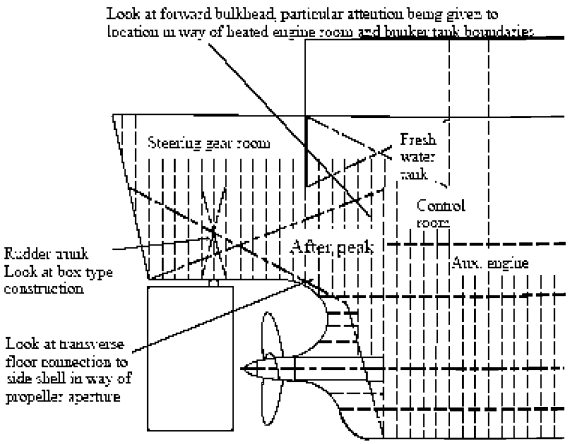

Figure 1 Aft end structure - Potential problem areas

3 General comments on repair

3.1 Material wastage

3.1.1 The extent of steel renewal required can be established based on representative thickness measurements. Where part of the structure has deteriorated to the permissible minimum thickness, then the affected area is to be cropped and renewed. Repair work in tanks requires careful planning in terms of accessibility.

3.2 Deformations

3.2.1 Deformed structure caused by contact should be cropped and part renewed or faired in place depending on the extent of damage.

3.3 Fractures

3.3.1 Fractures of a minor nature may be veed-out and rewelded. Where cracking is more extensive, the structure is to be cropped and renewed.

3.3.2 In order to prevent recurrence of damages suspected to be caused by main engine or propeller excited vibration, the cause of the vibration should be ascertained and additional reinforcements provided as found necessary (See Examples 9 and 10).

3.3.3 In the case of fractures caused by sea loads, increased thickness of plating and/or design modifications to reduce stress concentrations should be considered.

3.3.4 Fractured structure which supports rudder carrier is to be cropped, and renewed, and may have to be reinforced (See Examples 11 and 12).

Area 2 Aft End Structure

OIL Tankers	Guidelines for Surveys, Assessment and Repair of Hull Structure	
Group 7	**Aft region**	**Example No.**
Area 2	**Aft peak ballast tank**	**9**
Detail of damage	Fractures in bulkhead in way of rudder trunk	

Sketch of damage

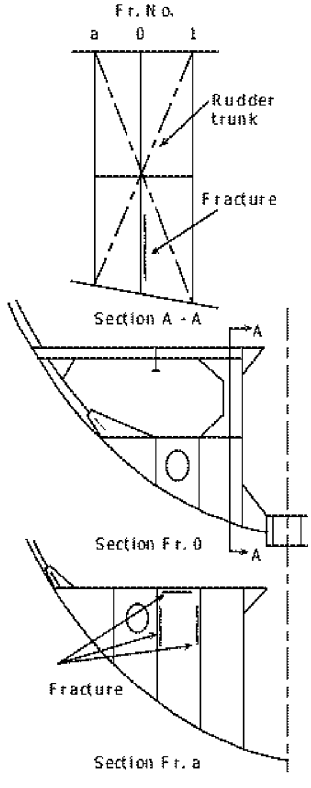

Sketch of repair

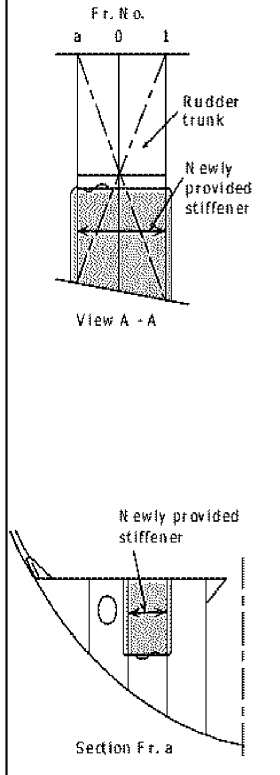

Factors which may have caused damage

1. Vibration.

Notes on repairs

1. The fractured plating should be cropped and renewed.
2. Natural frequency of the plate between stiffeners should be changed, e.g. reinforcement by additional stiffeners.

OIL Tankers	Guidelines for Surveys, Assessment and Repair of Hull Structure	
Group 7	Aft region	Example No.
Area 2	Aft peak ballast tank	10
Detail of damage	Fractures at the connection of floors and girders/side brackets	

Sketch of damage

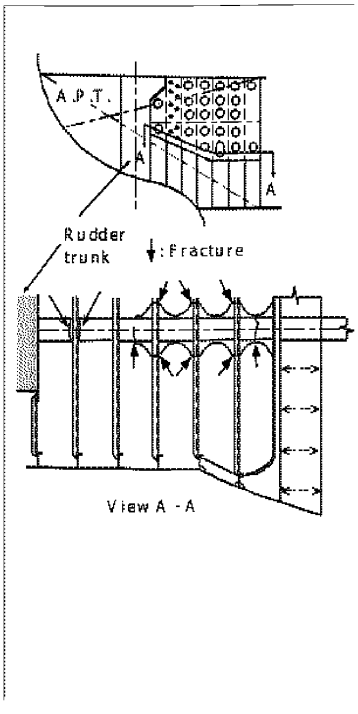

Sketch of repair

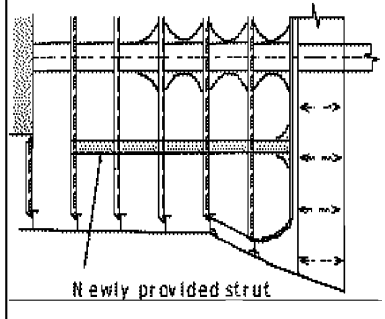

Factors which may have caused damage

1. Vibration.

Notes on repairs

1. The fractured plating should be cropped and renewed.
2. Natural frequency of the panel should be changed, e.g. reinforcement by additional strut.

OIL Tankers	Guidelines for Surveys, Assessment and Repair of Hull Structure	
Group 7	Aft region	Example No.
Area 2	Machinery space outside Engine room	11
Detail of damage	Fractures in flat where rudder carrier is installed in steering gear room	

Sketch of damage

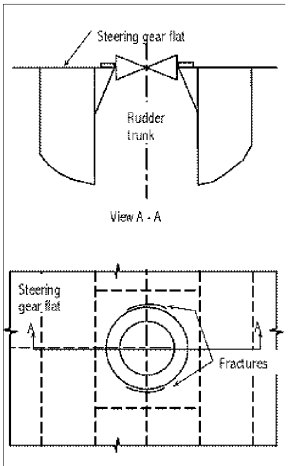

Sketch of repair

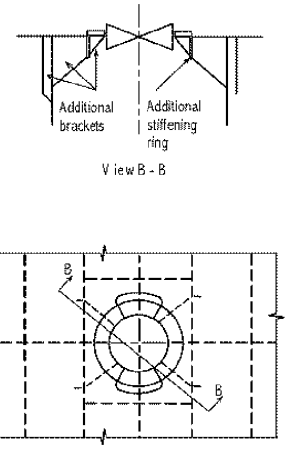

Factors which may have caused damage

1. Inadequate design.

Notes on repairs

1. Fractured plating should be cropped and renewed.
2. Additional brackets and stiffening ring should be fitted for reinforcement.

OIL Tankers	Guidelines for Surveys, Assessment and Repair of Hull Structure	
Group 7	Aft region	Example No.
Area 2	Machinery space outside engine room	12
Detail of damage	Fractures in steering gear foundation brackets and deformed deck plate	

Sketch of damage

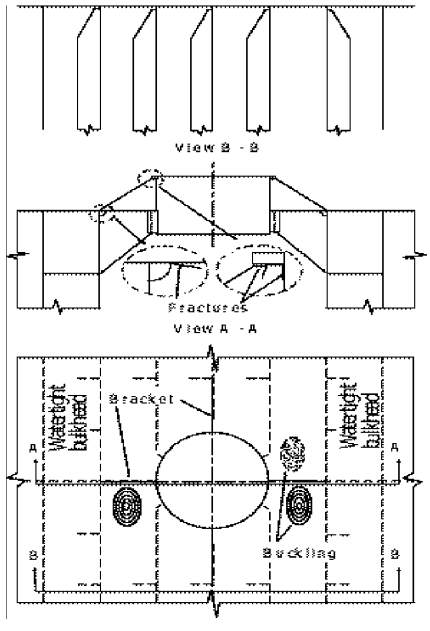

Sketch of repair

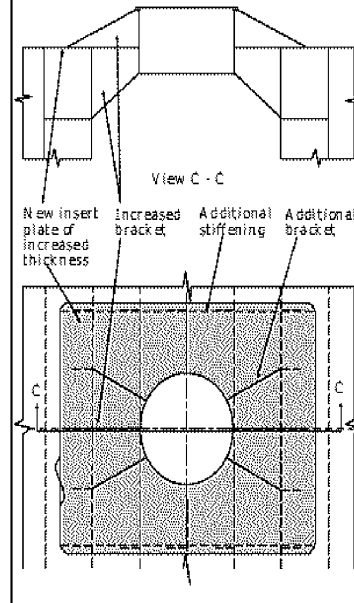

Factors which may have caused damage

1. Insufficient deck strengthening (missing base plate).
2. Insufficient strengthening of steering gear foundation.
3. Bolts of steering gear were not sufficiently pre-loaded.

Notes on repairs

1. New insert base plate of increased plate thickness.
2. Additional longitudinal stiffening at base plate edges.
3. Additional foundation brackets above and under deck (star configuration).

Group 8 Machinery and Accommodation Spaces

- Area 1 Engine Room Structure
- Area 2 Accommodation Structure

Area 1 Engine Room Structure

Contents

1 General

2 What to look for - Engine room survey
2.1 Material wastage
2.2 Fractures

3 What to look for - Tank survey
3.1 Material wastage
3.2 Fractures

4 General comments on repair
4.1 Material wastage
4.2 Fractures

Examples of structural detail failures and repairs – Group 8

Example No.	Title
1	Fractures in brackets at main engine foundation
2	Corrosion in bottom plating under sounding pipe in way of bilge storage tank in engine room
3	Corrosion in bottom plating under inlet/suction/pipe in way of bilge tank in engine room

1 General

The engine room structure is categorized as follows:

- Boundary structure, which consists of upper deck, bulkhead, inner bottom plating, funnel, etc.
- Deep tank structure
- Double bottom tank structure

The boundary structure can generally be inspected routinely and therefore any damages found can usually be easily rectified. Deep tank and double bottom structures, owing to access difficulties, generally cannot be inspected routinely. Damage of these structures is usually only found during dry docking or when a leakage is in evidence.

2 What to look for - Engine room survey

2.1 Material wastage

2.1.1 Tank top plating, shell plating and bulkhead plating adjacent to the tank top plating may suffer severe corrosion caused by leakage or lack of maintenance of sea water lines.

2.1.2 Bilge well should be cleaned and inspected carefully for heavy pitting corrosion caused by sea water leakage at gland packing or maintenance operation of machinery.

2.1.3 Parts of the funnel forming the boundary structure often suffer severe corrosion, which may impair fire fighting in engine room and weathertightness.

3 What to look for - Tank survey

3.1 Material wastage

3.1.1 The environment in bilge tanks, where mixture of oily residue and seawater is accumulated, is more corrosive when compared to other double bottom tanks. Severe corrosion may result in holes in the bottom plating, especially under sounding pipe. Pitting corrosion caused by seawater entered through air pipe is seldom found in cofferdam spaces.

3.2 Fractures

3.2.1 In general, deep tanks for fresh water or fuel oil are located in engine room. The structure in these tanks often sustains fractures due to vibration. Fracture of double bottom structure in engine room is seldom found due to its high structural rigidity.

4 General comments on repair

4.1 Material wastage

4.1.1 Where part of the structure has deteriorated to the permissible minimum thickness, then the affected area is to be cropped and renewed. Repair work in double bottom will require careful planning in terms of accessibility and gas freeing is required for repair work in fuel oil tanks.

4.2 Fractures

4.2.1 For fatigue fractures caused by vibration, in addition to the normal repair of the fractures, consideration should be given to modification of the natural frequency of the structure to avoid resonance. This may be achieved by providing additional structural reinforcement, however, in many cases, a number of tentative tests may be required to reach the desired solution.

Group 8 Area 1 Engine Room Structure

OIL Tankers	Guidelines for Surveys, Assessment and Repair of Hull Structure	
Group 8	Machinery and accommodation spaces	Example No.
Area 1	Engine room	1
Detail of damage	Fractures in brackets at main engine foundation	

Sketch of damage

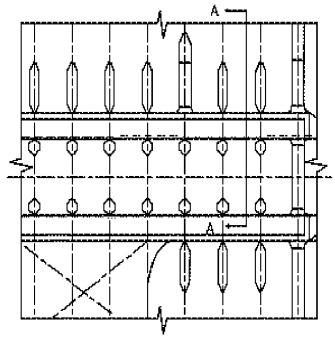

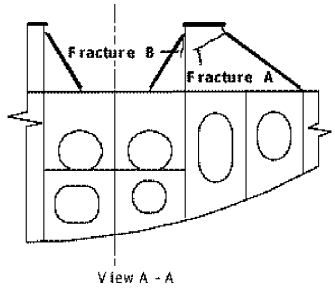

Sketch of repair

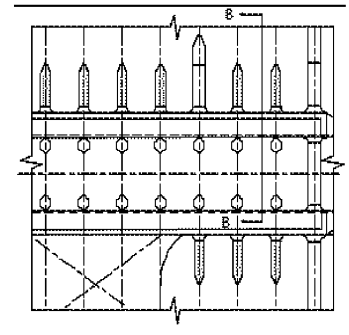

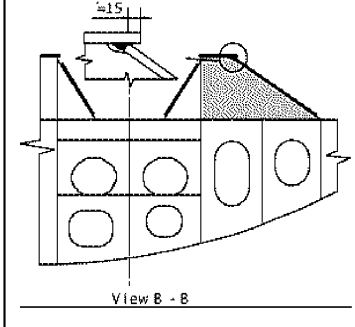

Factors which may have caused damage

1. Vibration of main engine.
2. Insufficient strength of brackets at main engine foundation.
3. Insufficient pre-load of the bolts.

Notes on repairs

1. Fractures may be veed-out and rewelded.
2. New modified brackets at main engine foundation.
3. Or insert pieces and additional flanges to increase section modulus of the brackets.

OIL Tankers	Guidelines for Surveys, Assessment and Repair of Hull Structure	
Group 8	Machinery and accommodation spaces	Example No.
Area 1	Engine room	2
Detail of damage	Corrosion in bottom plating under sounding pipe in way of bilge storage tank in engine room	

Sketch of damage

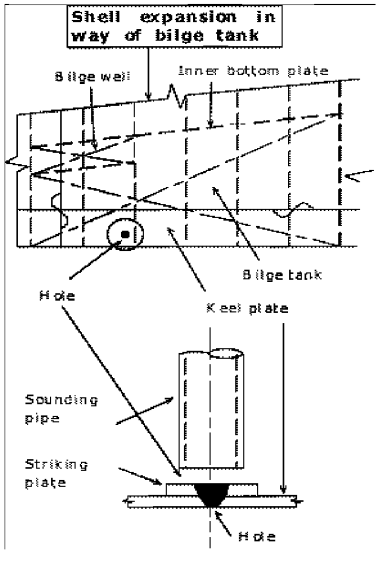

Sketch of repair

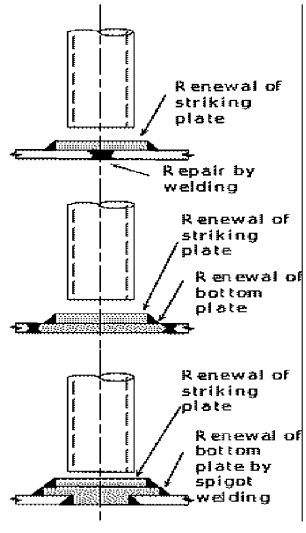

Factors which may have caused damage

1. Heavy corrosion of bottom plating under sounding pipe.

Notes on repairs

1. Corroded striking plating should be renewed.
2. Bottom plate should be repaired depending on the condition of corrosion.

(Note):
Repair by spigot welding can be applied to the structure only when the stress level is considerably low. Generally this procedure cannot be applied to the repair of bottom plating of ballast tanks in cargo tank region.

OIL Tankers	Guidelines for Surveys, Assessment and Repair of Hull Structure	
Group 8	Machinery and accommodation spaces	Example No.
Area 1	Engine room	3
Detail of damage	Corrosion in bottom plating under inlet/suction/pipe in way of bilge tank in engine room	

Sketch of damage

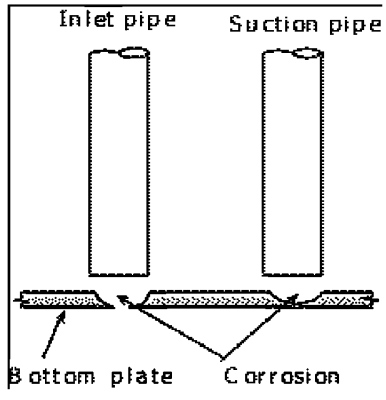

Sketch of repair

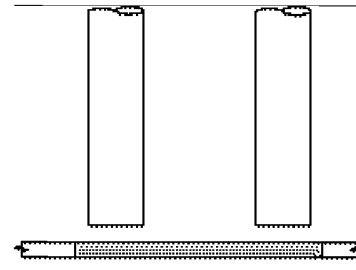

Factors which may have caused damage

1. Heavy corrosion of bottom plating under the inlet/suction pipe.

Notes on repairs

1. Corroded bottom plate is to be cropped and part renewed. Thicker plate is preferable.
2. Replacement of pipe end by enlarged conical opening (similar to suction head in ballast tank) is preferable.

Area 2 Accommodation Structure

Contents

1 General

Group 8 Figures and/or Photographs – Area 2

Example No.	Title
Photo 1	Corroded accommodation house side structure

1 General

Corrosion is the main concern in accommodation structure and deckhouses of aging ships. Owing to the lesser thickness of the structure plating, corrosion can propagate through the thickness of the plating resulting in holes in the structure.

Severe corrosion may be found in exposed deck plating and deck house side structure adjacent to the deck plating where water is liable to accumulate (See **Photograph 1**). Corrosion may also be found in accommodation bulkheads around cut-out for fittings, such as doors, side scuttles, ventilators, etc., where proper maintenance of the area is relatively difficult. Deterioration of the bulkheads including fittings may impair the integrity of weathertightness.

Fatigue fractures caused by vibration may be found, in the structure itself and in various stays of the structures, mast, antenna, etc.. For such fractures, consideration should be given to modify the natural frequency of the structure by providing additional reinforcement during repair.



Photograph 1 Corroded accommodation house side structure

No. 132 (Dec 2013) Human Element Recommendations for structural design of lighting, ventilation, vibration, noise, access and egress arrangements

Table of Contents

Section 1 - Introduction

1.1 Scope and objectives

1.2 Application

1.3 Definitions

1.4 Recommendation overview

Section 2 - The Human Element

2.1 Regulatory expectations

2.2 Human Element Considerations

Section 3 - Rationale for considering the Human Element in the design of lighting, ventilation, vibration, noise, access and egress arrangements

3.1 General

3.2 Lighting
3.2.1 Task requirements
3.2.2 Ergonomic design principles
3.2.3 Conditions
3.2.4 Implications for structures

3.3 Ventilation
3.3.1 Task requirements
3.3.2 Ergonomic design principles
3.3.3 Conditions
3.3.4 Implications for structures

3.4 Vibration
3.4.1 Task requirements
3.4.2 Ergonomic design principles
3.4.3 Conditions
3.4.4 Implications for structures

3.5 Noise
3.5.1 Task requirements
3.5.2 Ergonomic design principles
3.5.3 Conditions
3.5.4 Implications for structures

No. 132 (cont)

3.6 Access and Egress
3.6.1 Task requirements
3.6.2 Ergonomic design principles
3.6.3 Conditions
3.6.4 Implications for structures

Section 4 - Ergonomic Structural Arrangement Recommendations

4.1 General

4.2 Lighting Design
4.2.1 Aims
4.2.2 Application
4.2.3 Locations
4.2.4 Structural Arrangements

4.3 Ventilation Design
4.3.1 Aims
4.3.2 Application
4.3.3 Locations
4.3.4 Structural Arrangements

4.4 Vibration Design
4.4.1 Aims
4.4.2 Application
4.4.3 Locations
4.4.4 Structural Arrangements

4.5 Noise Design
4.5.1 Aims
4.5.2 Application
4.5.3 Locations
4.5.4 Structural Arrangements

4.6 Access and Egress Design
4.6.1 Aims
4.6.2 Application
4.6.3 Locations
4.6.4 Structural Arrangements

Annex A - Recommended Measurement Values
1.1 General
1.2 Lighting
1.3 Ventilation
1.4 Vibration
1.5 Access

Annex B - Relevant Standards, Guidelines and Practices
2.1 Lighting
2.2 Ventilation
2.3 Vibration
2.4 Noise
2.5 Access

No. 132 (cont)

Section 1 - Introduction

1.1 Scope and objectives

The objectives of this recommendation are to summarise information for human element and ergonomics during the structural design and arrangement of ships, including:

a) Stairs, vertical ladders, ramps, walkways and work platforms used for permanent means of access and/or for inspection and maintenance operations according to 9.2.1.1 and 9.3.1 of IMO Resolution MSC.296(87).

b) Structural arrangements to facilitate the provision of adequate lighting, ventilation, and to reduce noise and vibration in manned spaces according to 9.2.1.2, 9.3.2, and 9.3.3 of IMO Resolution MSC.296(87).

c) Structural arrangements to facilitate the provision of adequate lighting and ventilation in tanks or closed spaces for the purpose of inspection, survey and maintenance according to 9.2.1.3 and 9.3.4 of IMO Resolution MSC.296(87).

d) Structural arrangements to facilitate emergency egress of inspection personnel or ships' crew from tanks, holds, voids according to 9.2.1.4 and 9.3.5 of IMO Resolution MSC.296(87).

1.2 Application

This document is an IACS non mandatory recommendation on human element considerations during the structural design and arrangement of ships under the scope and objectives specified in 1.1 above. In addition, this document also provides information for industry best practices regarding human element considerations for design of lighting, ventilation, vibration, noise, access & egress.

1.3 Definitions

Ergonomics: 'Ergonomics is the scientific discipline concerned with the understanding of interactions among humans and other elements of a system, and the profession that applies theory, principles, data, and methods to design in order to optimize human well-being and overall system performance.' (Source: International Ergonomics Association, 2013)

Human element: 'A complex multi-dimensional issue that affects maritime safety, security and marine environmental protection. It involves the entire spectrum of human activities performed by ships' crews, shore-based management, regulatory bodies, recognised organizations, shipyards, legislators, and other relevant parties, all of whom need to co-operate to address human element issues effectively.' (Source: IMO Resolution A.947(23))

1.4 Recommendation overview

This document is laid out in a number of sections and annexes with the purpose of presenting clear guidance on applying good ergonomic practice for design for lighting, ventilation, vibration, noise, access & egress.

- **Section 2** – The purpose of this section is to explain why the human element is increasingly seen as an important topic and how the regulations that govern shipping are increasingly putting more emphasis on the human element.

No. 132 (cont)

- **Section 3** – The purpose of this section is to present a rationale for why the human element should be considered for the recommendation criteria – lighting, ventilation, vibration, noise, access and egress arrangements – and how this will have an implication for structures.
- **Section 4** – The purpose of this section is to present more detailed structural arrangement recommendations for each of the criteria – lighting, ventilation, vibration, noise, access and egress arrangements.
- **Annex A** – The Annex provides designers with measurement values for some of the criteria that can aid designers when applying design recommendations. They provide the designer with additional information that can assist in making design judgements.
- **Annex B** – The Annex presents a list of relevant standards that bear some relation to good ergonomic practice.

No. 132 (cont)

Section 2 - The Human Element

2.1 Regulatory expectations

The regulations that govern the marine industry are gradually putting more emphasis on the human element. In general, the interest in the 'people aspects' of regulations is increasing due to the many rapid changes in the marine environment.

IMO Resolution A.947(23): Human Element Vision, Principles and Goals for the Organization

The IMO (according to Resolution A.947(23)) refers to the human element as:

"A complex multi-dimensional issue that affects maritime safety, security and marine environmental protection. It involves the entire spectrum of human activities performed by ships' crews, shore-based management, regulatory bodies, recognized organizations, shipyards, legislators, and other relevant parties, all of whom need to co-operate to address human element issues effectively."

In other words, anything that influences the interaction between a human and any other human, system or machine onboard ship, while accounting for the capabilities and limitations of the human, the system, and the environment.

IMO Resolution A.947(23) further states *"the need for increased focus on human-related activities in the safe operation of ships, and the need to achieve and maintain high standards of safety, security and environmental protection for the purpose of significantly reducing maritime casualties";* and that *"human element issues have been assigned high priority in the work program of the Organization because of the prominent role of the human element in the prevention of maritime casualties."*

ILO Maritime Labour Convention

The ILO's Maritime Labour Convention (MLC), 2006, provides comprehensive rights and protection at work for the world's seafarer population. It sets out new requirements specifically relating to the working and living conditions on board ships.

Aimed at seafarer health, personal safety and welfare in particular, the new MLC has specific requirements in Regulation 3.1 and Standard A3.1 for accommodation design and construction, especially in relation to living accommodation, sanitary facilities, lighting, noise, vibration, heating and ventilation.

2.2 Human Element Considerations

The human element in a maritime sense can be thought of as including the following;

a) Design and Layout Considerations

Design and layout considers the integration of personnel with equipment, systems and interfaces. Examples of interfaces include: controls, displays, alarms, video-display units, computer workstations, labels, ladders, stairs, and overall workspace arrangement.

It is important for designers and engineers to consider personnel's social, psychological, and physiological capabilities, limitations and needs that may impact work performance. Hardware and software design, arrangement, and orientation should be compatible with personnel

No. 132 (cont)

capabilities, limitations, and needs. Workplace design includes the physical design and arrangement of the workplace and its effect on safety and performance of personnel.

In addition, designers and engineers should be aware of the cultural and regional influences on personnel's behavioural patterns and expectations. This includes, for example, understanding that different cultural meanings with regard to colour exist, or that bulky clothing is needed when using equipment in cold weather. Awareness of potential physical differences (e.g., male/female, tall/short, North American versus South-East Asian) is needed so that the design, arrangement, and orientation of the work environment reflects the full range of personnel.

If these factors are not considered, the workplace design may increase the likelihood of human error. Additional training, operations, and maintenance manuals, and more detailed written procedures cannot adequately compensate for human errors induced by poor design.

b) Ambient Environmental Considerations

This addresses the habitability and occupational health characteristics related to human whole-body vibration, noise, indoor climate and lighting. Substandard physical working conditions undermine effective performance of duties, causing stress and fatigue. Examples of poor working conditions include poor voice communications due to high noise workplaces or physical exhaustion induced by high temperatures. Ambient environmental considerations also include appropriate design of living spaces that assist in avoidance of, and recovery from, fatigue.

c) Considerations Related to Human Capabilities and Limitations

Personnel readiness and fitness-for-duty are essential for vessel safety. This is particularly so as tasks and equipment increase in complexity, requiring ever-greater vigilance, skills, competency and experience. The following factors should be considered when selecting personnel for a task:

- Knowledge, skills, and abilities that stem from an individual's basic knowledge, general training, and experience
- Maritime-specific or craft-specific training and abilities (certifications and licenses) and vessel specific skills and abilities
- Bodily dimensions and characteristics of personnel such as stature, shoulder breadth, eye height, functional reach, overhead reach, weight, and strength
- Physical stamina; capabilities, and limitations, such as resistance to and freedom from fatigue; visual acuity; physical fitness and endurance; acute or chronic illness; and substance dependency
- Psychological characteristics, such as individual tendencies for risk taking, risk tolerance, and resistance to psychological stress.

d) Management and Organizational Considerations

This factor considers management and organizational considerations that impact safety throughout a system lifecycle. The effective implementation of a well-designed safety policy, that includes ergonomics, creates an environment that minimizes risks. Commitment of top management is essential if a safety policy is to succeed. Management's commitment can be demonstrated by:

No. 132 (cont)

- Uniformly enforced management rules for employee conduct
- Easy-to-read and clear management policies
- Allocation of sufficient funds in the owner/operator's budget for operations and for safety programs, including ergonomics, to be properly integrated and implemented
- Work schedules arranged to minimize employee fatigue
- Creation of a high-level management safety position which includes the authority to enforce a safety policy that includes ergonomics
- Positive reinforcement of employees who follow company safety regulations
- Company commitment to vessel installation maintenance.

No. 132 (cont)

Section 3 - Rationale for considering the Human Element in the design of lighting, ventilation, vibration, noise, access and egress arrangements

3.1 General

3.1.1 The design of the on board working environment for the ship's crew should consider environmental factors such as lighting, ventilation, vibration and noise. Insufficient attention paid to the physical working conditions can have an effect on task performance, health and safety and well-being.

3.1.2 The design of stairs, vertical ladders, ramps, walkways and work platforms used for permanent means of access should facilitate safe movement within or among working or habitability areas. Insufficient attention paid to access arrangements can have an effect on task performance and safety. Insufficient attention paid to egress arrangements can have an effect on safe evacuation during an emergency.

3.1.3 The following headings are applied to each of the criteria addressed in this recommendation to give the rationale for what needs to be considered from a human element perspective;

- Task requirements
- Ergonomic design principles
- Conditions
- Implications for structures

3.2 Lighting

3.2.1 Task requirements

- The lighting of crew spaces should facilitate visual task performance as well as the movement of crew members within or between working or habitability areas. It should also aid in the creation of an appropriate aesthetic visual environment. Lighting design involves integrating these aspects to provide adequate illumination for the safety and well-being of crew as well as affording suitable task performance.

- In order to facilitate operation, inspection, and maintenance tasks in normally occupied spaces and inspection, survey and maintenance tasks in closed spaces, the design of lighting should promote;

- task performance, by providing adequate illumination for the performance of the range of tasks associated with the space
- safety, by allowing people enough light to detect hazards or potential hazards
- visual comfort and freedom from eye strain.

3.2.2 Ergonomic design principles

- In order to facilitate the task requirements identified above, the following design principles are identified as needing to be achieved for lighting design. These design principles are based on good ergonomic practice and will form the basis for the development of the structural arrangement recommendations.

- The design of lighting should;

- provide adequate illumination for the performance of the range of tasks associated with the space

No. 132 (cont)

- be suitable for normal conditions and any additional emergency conditions
- provide uniform illumination as far as practicable
- avoid glare and reflections
- avoid bright spots and shadows
- be free of perceived flicker
- be easily maintained and operated
- be durable under the expected area of deployment

3.2.3 Conditions

- The provision of adequate lighting is dependent on several factors which need to be taken into account. These include;

- Time of day and external light characteristics
- Differing proximity to deadlights, windows, doors

3.2.4 Implications for structures

- In order to address the design principles outlined above, there are several implications for the structural arrangements. These implications with regard to structures will address;

- Positioning of luminaires
- Overhead arrangements (stringers, pipes and ductwork, cable trays)
- Positioning of switches and controls
- Provision and position of windows providing natural light
- Control of natural and artificial sources of glare
- Supply of power
- Constrained space lighting (permanent or intrinsically safe portable lighting)

3.3 Ventilation

3.3.1 Task requirements

- In order to facilitate operation, inspection and maintenance tasks in manned spaces, the ventilation system is to be suitable to maintain operator vigilance, comfort, provide thermal protection (from heat and cold) and to aid safe and efficient operations.

- In order to facilitate periodic inspections, survey and maintenance in tanks or closed spaces the means of ventilation is to ensure the safety of personnel in enclosed spaces from poor or dangerous air quality.

3.3.2 Ergonomic design principles

- In order to facilitate the task requirements identified above, the following design principles are identified as needing to be achieved for ventilation / indoor climate design. These design principles are based on accepted ergonomic practice and will form the basis for the development of the structural arrangement recommendations.

- Indoor climate should be designed to;

- provide adequate heating and/or cooling for onboard personnel
- provide uniform temperatures (gradients)
- maintain comfortable zones of relative humidity
- provide fresh air (air exchange) as part of heated or cooled return air

No. 132 (cont)

- provide clean filtered air, free of fumes, particles or airborne pathogens
- monitor gas concentration (CO, CO_2, O_2 etc.)
- be easily adjustable by onboard personnel
- minimise contribution of ventilation noise to living and work spaces
- provide sufficient velocity to maintain exchange rates whilst not being noisy or annoying
- provide means to use natural ventilation
- provide/assess safe air quality while working in enclosed spaces

• Additionally, the design of the ventilation system should give consideration to keep the structural integrity for purposes of fire insulation

3.3.3 Conditions

• Ventilation provisions should accommodate and take into account the following factors;

- extremes of external environmental conditions (highs and lows of temperature and humidity)
- expected human occupancy of work and living spaces
- operating components that contribute heat to a living or working space
- entry into confined spaces for the purpose of inspection

3.3.4 Implications for structures

• In order to address the design principles outlined above, there are several implications for the structural arrangements. These implications with regard to structures will include;

- exterior ambient conditions (sizing the HVAC system)
- indoor air quality (particulate, smoke, O_2, CO_2, other gases)
- Ventilation capacity and air flow
- Water stagnation
- Bio-organisms and toxins
- Pipe and ductwork condensate
- Inspection access, maintenance access
- Noise and vibration control
- Energy efficiency

3.4 Vibration

3.4.1 Task requirements

• In order to facilitate operation, inspection and maintenance tasks in manned spaces, the level of vibration is to be such that it does not introduce injury or health risks to shipboard personnel.

• Additionally, consideration will be made for the impact of vessel motion on human comfort.

• These considerations extend to living and work tasks occurring in habitability and work spaces as well as infrequently occupied spaces such as tanks and small holds entered for the purpose of maintenance or inspection.

3.4.2 Ergonomic design principles

No. 132 (cont)

- In order to facilitate the task requirements identified above, the following design principles were identified as needing to be considered in vibration control. Vessel design should;

- protect onboard personnel from harmful levels of vibration
- protect onboard personnel from levels of vibration impairing job performance
- protect onboard personnel from levels of vibration that interferes with sleep or comfort
- provide protection from both continuous exposure and shock (high peak values)

3.4.3 Conditions

- Vibration control provisions should accommodate and take into account the following factors;

- Continuous service output of prime mover(s)
- Equipment operation (such as thrusters, air compressors and auxiliary generators)
- Course, speed and water depth
- Rudder conditions
- Sea conditions
- Loading conditions

3.4.4 Implications for structures

- In order to meet the design principles outlined above, there are several implications for the structural arrangements to reduce vibration. The implications with regard to structures will address;

- Machinery excitation (main mover)
- Rotating components (turbines)
- Pumps
- Refrigeration
- Air compressors
- Shafting excitation
- Propeller blade tip/hull separation
- Cavitation
- Thrusters and azipods
- Hull and structure response to vibration.
- Resonance of structures
- Location of safety rails, hand holds, seating devices, means to secure loose stock or rolling stock in relation to ship motion

3.5 Noise

3.5.1 Task requirements

- Depending on the level and other considerations, noise can contribute to hearing loss, interfere with speech communications, mask audio signals, interfere with thought processes, disrupt sleep, distract from productive task performance, and induce or increase human fatigue.

- In order to facilitate operation, inspection and maintenance tasks in manned spaces, the level of noise should to be such that it;

- does not impair hearing either permanently or temporarily,
- is not at levels which interfere with verbal communication

No. 132 (cont)

- is not at levels which interfere with the hearing of alarms and signals
- is not at levels that will cause stress, distract from task performance or increase the risk of errors
- does not interfere with the ability to sleep
- does not increase or induce fatigue
- does not reduce habitability or sense of comfort

3.5.2 Ergonomic design principles

- Noise control provisions should accommodate and take into account the following conditions. Vessel design should;

- ensure that onboard personnel are protected from harmful levels of noise (health hazards, hearing loss, cochlear damage)
- ensure that onboard personnel are protected from levels of noise impairing job performance
- ensure that onboard personnel are protected from levels of noise impairing verbal communication and the hearing of signals (such as alarms, bells, whistles, etc.)
- ensure that onboard personnel are protected from levels of noise that interfere with sleep or comfort

3.5.3 Conditions

- The development of provisions to reduce noise is dependent on several factors which need to be taken into account. These include;

- Equipment Operation
- Sea Conditions
- Loading Conditions and cargo operations
- Performance of maintenance or inspection tasks, including infrequently accessed areas.

3.5.4 Implications for structures

- In order to meet the design principles outlined above, there are implications for the structural arrangements to reduce noise, these include;

- Machinery excitation (main mover)
- Hull protrusions
- Rotating components (turbines)
- Pumps
- Refrigeration
- Air compressors, fans, ventilation ductwork, exhaust systems
- Shafting excitation
- Propeller blade tip/hull separation
- Cavitation
- Thrusters and azipods
- Noise abatement / shielding

3.6 Access & Egress

3.6.1 Task requirements

- The design of accesses and access structures of crew spaces should facilitate the safe movement of crew members within or among working or habitability areas. These

No. 132 (cont)

include access structures such as passageways, ladders, ramps, stairs, work platforms, hatches, and doors. Also included are handrails, guard rails, and fall protection devices.

- In order to facilitate operation, inspection, and maintenance tasks in normally occupied spaces and inspection, survey and maintenance tasks in closed spaces, the design of accesses and access structures should promote;

- task performance, by providing adequate configurations and dimensions facilitating human access.
- safety, by providing barriers to falls or other types of injury.

3.6.2 Ergonomic design principles

- In order to facilitate the task requirements identified above, the following design principles are identified as needing to be achieved for access design. These design principles are based on good ergonomic practice and will form the basis for the development of the structural arrangement recommendations.

- The design of access and egress arrangements should;

- provide adequate access for the performance of the range of tasks associated (general access, accommodations access, maintenance and other work access) with the space
- be suitable for normal and emergency conditions
- be sized according to the access (or related) task required
- be sized according to the expected user population
- be easily maintained and operated
- be durable under the expected area of deployment
- accommodate ship motions

3.6.3 Conditions

- The identification of access requirements is dependent on several factors which need to be taken into account when developing recommendations. These include;

- Expected extent of vessel motion and potential interference with walking, standing, or climbing due to instability
- Exposure to external areas that may experience rain, snow, ice, spray, wind or other environmental conditions that may influence the usability and safety of accesses or access aids
- Potential for slips, trips, or falls and provision and design of accesses and access aids preventing their occurrence.

3.6.4 Implications for structures

- In order to address the design principles outlined above, there are several implications for the structural arrangements. These implications with regard to structures will address;

- Provision and size of access structures (based on frequency of use and numbers of crew)
- Locations of accesses
- Exposure to the external elements
- Safety in access to, and use of, access structures

No. 132 (cont)

Section 4 - Ergonomic Structural Arrangement Recommendations

4.1 General

4.1.1 The guidance presented in this section provides detailed structural arrangement recommendations for each of the criteria – lighting, ventilation, vibration, noise, access and egress arrangements.

4.2 Lighting Design

4.2.1 Aims

- Following a review of IMO Resolution MSC.296(87), the structural arrangements to facilitate the provision of adequate lighting in spaces normally occupied or manned by shipboard personnel should be considered.

- A space may be considered as being 'normally occupied' or 'manned' when it is routinely occupied for a period of 20 minutes or more.

- Following a review of IMO Resolution MSC.296(87), the structural arrangements to facilitate the provision of adequate lighting in areas infrequently manned such tanks or closed spaces for periodic inspections, survey and maintenance should be considered.

4.2.2 Application

- The recommendations presented in this section are applicable to vessels covered in SOLAS Regulation II-1/3-10.

4.2.3 Locations

- Locations for lighting in manned spaces should be provided permanently and include the following;

- Living quarters (accommodation, recreation, offices, dining)
- Work Areas (control rooms, bridge, machinery spaces, workshops, offices, and spaces entered on a daily basis)
- Access Areas (corridors, stairways, ramps and the like)

- Lighting in infrequently manned spaces may be temporary and include the following;

- Tanks, small holds, infrequently occupied closed spaces

4.2.4 Structural Arrangements

Allowance should be made for the following ergonomic recommendations during structural design and construction as appropriate.

A) Positioning of Lighting

- Natural lighting through the use of windows and doors should be provided as far as practicable.

- Lights should be positioned, as far as practicable, in the same horizontal plane and arranged symmetrically to produce a uniform level of illumination.

No. 132 (cont)

- Lights should be positioned taking account of air conditioning vents or fans, fire detectors, water sprinklers etc. so the lighting is not blocked by these items.
- Lights should be positioned so as to reduce as far as possible bright spots and shadows.
- Fluorescent tubes should be positioned at right angles to an operator's line of sight while the operator is located at their typical duty station as far as practicable.
- Any physical hazards that provide a risk to operator safety should be appropriately illuminated.
- Lights should be positioned to consider the transfer of heat to adjacent surfaces.
- Lights should not to be positioned in locations which would result in a significant reduction in illumination.
- Lights should not to be positioned in locations that are difficult to reach for bulb replacement or maintenance.

B) Illuminance distribution

- Illumination of the operator task area should be adequate for the type of task, i.e. it should consider the variation in the working plane.
- Sharp contrasts in illumination across an operator task area or working plane should be reduced, as far as possible.
- Sharp contrasts in illumination between an operator task area and the immediate surround and general background should be reduced, as far as possible.
- Where necessary for operational tasks, local illumination should be provided in addition to general lighting.
- Lights should not flicker or produce stroboscopic effects.

C) Obstruction and glare

- Lights should be positioned so as to reduce as far as possible glare or high brightness reflections from working and display surfaces.
- Where necessary, suitable blinds and shading devices may be used to prevent glare.
- Lighting should not to be obstructed by structures such as beams and columns.
- The placement of controls, displays and indicators should consider the position of the lights relative to the operator in their normal working position, with respect to reflections and evenness of lighting.
- Surfaces should have a non-reflective or matt finish in order to reduce the likelihood of indirect glare.

D) Location and installation of lighting controls

- Light switches should be fitted in convenient and safe positions for operators.

No. 132 (cont)

- The mounting height of switches should be such that personnel can reach switches with ease.

E) Location and installation of electrical outlets

- Outlets should be installed where local lighting is provided, for e.g. in accommodation areas, work spaces and internal and external walkways.

- Provision is to be made for temporary lighting where necessary for inspection, survey and maintenance.

4.3 Ventilation Design

4.3.1 Aims

- Following a review of IMO Resolution MSC.296(87), the structural arrangements to facilitate the provision of adequate ventilation in spaces normally occupied or manned by shipboard personnel should be considered.

- A space may be considered as being 'normally occupied' or 'manned' when it is routinely occupied for a period of 20 minutes or more.

- Following a review of IMO Resolution MSC.296(87), the structural arrangements to facilitate the provision of adequate ventilation in areas infrequently manned such tanks or closed spaces for periodic inspections, survey and maintenance should be considered.

4.3.2 Application

- The recommendations presented in this section are applicable to vessels covered in SOLAS Regulation II-1/3-10.

4.3.3 Locations

- Locations for ventilation in manned spaces should be provided permanently and include the following;

- Living quarters (accommodation, recreation, offices, dining)
- Work Areas (control rooms, bridge, machinery spaces, offices, spaces and voids entered)

- Locations for ventilation in infrequently manned spaces should be temporary and include the following;

- Tanks, small holds, infrequently occupied closed/enclosed spaces

4.3.4 Structural Arrangements

Allowance should be made for the following ergonomic recommendations during structural design and construction as appropriate.

A) Ship ventilation design

No. 132 (cont)

- Natural ventilation design should be established by consideration of compartment layouts and specifications. Typical natural ventilation devices include mushroom ventilators, gooseneck ventilators, ventilators with weather proof covers etc.
- In general, HVAC (heating, ventilation and air conditioning) systems should be provided in spaces normally occupied during operation.
- For areas infrequently occupied (such as tanks or holds) means of air quality sampling (such as portable CO_2 densitometer) should be provided.
- Means to ventilate prior to entry of infrequently visited places should be provided.
- Adequate ventilation should be provided for inspection, survey, maintenance and repair within the voids of double-bottom and double-sided hulls.

B) Location and installation of ventilation

- The design of air ducts should facilitate reduced wind resistance and noise. Ductwork (particularly elbows and vents) should not contribute excess noise to a work or living space.
- Ductwork should not to interfere with the use of means of access such as stairs, ladders, walkways or platforms.
- Ductwork and vents should not be positioned to discharge directly on people occupying the room in their nominal working or living locations, for example, directed at a berth, work console, or work bench.
- Manholes and other accesses should be provided for accessibility and ventilation to points within.
- Fire dampers should be applied to contain the spread of fire, per statutory requirements.
- Ventilation penetrations through watertight subdivision bulkheads are not recommended unless accepted per statutory requirements. Ventilation dampers are to be visible (via inspection ports or other means).
- Ventilation fans for cargo spaces should have feeders separate from those for accommodations and machinery spaces.
- It is recommended that air Intakes for ventilation systems are located to minimise the introduction of contaminated air from sources such as for example, exhaust pipes and incinerators.
- Extractor grilles should be located to avoid short-circuits between inlets and outlets and to support even distribution of air throughout a work space.

4.4 Vibration Design

4.4.1 Aims

- Following a review of IMO Resolution MSC.296(87), the structural arrangements to minimize vibration in spaces normally occupied or manned by shipboard personnel should be considered.

No. 132 (cont)

- A space may be considered as being 'normally occupied' or 'manned' when it is routinely occupied for a period of 20 minutes or more.

4.4.2 Application

- The recommendations presented in this section are applicable to vessels covered in SOLAS Regulation II-1/3-10.

4.4.3 Locations

- Locations in which vibration should be minimized include the following;

- Living quarters (accommodation, recreation, offices, dining)
- Work Areas (such as control rooms, bridge, machinery spaces, offices, spaces and voids entered)

4.4.4 Structural Arrangements

Allowance should be made for the following ergonomic recommendations during structural design and construction as appropriate.

A) General

- Vibration levels should be at or below the acceptable ergonomic standards for spaces normally occupied by the crew. In general, ISO 6954:2000 may be used as a guideline to evaluate the vibration performance in the spaces normally occupied by the crew.

- Generally, many alternative measures are applicable to reduce vibration, including but not limited to:

  1 Resonance avoidance with a combination of appropriate selection of main engine and its revolution, number of propeller blades and structural natural frequencies;

  2 To avoid resonance, addition of mass or reduction in scantlings to achieve lower structural natural frequencies. Or conversely, reduction of mass or structural reinforcement to increase natural frequencies;

  3 Reduction of exciting force by for e.g. application of various kinds of dampers, compensators and balancers; and

  4 Structural reinforcement to increase rigidity and reduce structural response, or conversely, where structural rigidity is reduced specifically to reduce structural responses.

- Due to the variety of effective measures that can be taken and the complex nature of vibration phenomena, it is not possible to apply simple prescriptive formulae for scantling calculation.

- Structural measures are mainly prescribed in the following sections, but other measures as stated in 1-4 above may be considered as effective alternatives.

B) Vibration reduction design

- Vibration level in the spaces normally occupied during operation should be estimated by an appropriate method, such as estimation based on empirical statistics and/or

No. 132 (cont)

application of analytical tools. When a vibration level exceeding the acceptable ergonomic standards is envisaged, suitable countermeasures should be taken.

- In general, natural frequencies should be calculated using theoretical formulae in way of local panels and stiffeners in the spaces close to the main exciting sources, i.e. propeller and main engine. These local scantlings should be decided so that the estimated natural frequencies are apart from the exciting frequencies adequately to avoid resonance.

- For heavy equipment or machinery in the spaces close to the main exciting sources, suitable measures should be taken at the deck structure underneath the equipment or machinery to reduce vibration.

C) Anti-vibration design in structural arrangements

- Vibration should be controlled at the source as far as possible.

- To prevent hull girder vibration, the following measures are recommended for consideration;

    - selection of hull forms, girders and other ship structures with consideration to vibration control;
    - selection of main machinery with inertia force and moment balanced;
    - adjusting natural frequency (the natural frequency of hull girder increases as the number of bulkheads increases).

- To prevent vibration of the local structure, the following measures are recommended for consideration;

    - line (mainly the ship tail shape) and propeller design modification;
    - adjustment of general arrangements, such as cabin arrangement, weight distribution, location of main machinery;
    - adjustment and modification of local structures, such as superstructure, aft structures, bottom frame structure in engine room;
    - other damping measures, such as vibration isolators, nozzle propeller.

D) Anti-vibration design of engine room, engine, propeller and thrusters

- Consideration should be paid to the vibration response of main machinery base and shafting.

- Consideration of control of vibration from the engine room should include installing bracings at the top and front of diesel engines and increasing the stiffness and natural frequency of the machine base to reduce the vibration of the base.

- Bow thruster induced vibration should be minimized by following good acoustic design practices relative to the design of the propeller and the location and placement of the thruster itself. Supply of resilient supported tunnels (tunnel within a tunnel), bubbly air injectors, and tunnels coated with a decoupling material can be considered.

- Propeller induced vibration should be minimized by following good acoustic design practices relative to the design of the propeller and the location and placement in relation to the hull.

No. 132 (cont)

Stern shape should be optimized and considered through theoretical calculation and model testing so as to improve the wake. The gap between the shell and the propeller should be appropriate to reduce the exciting force. Damping treatments can be applied to shell plates with severe vibration.

E) Anti-vibration design of superstructure

- Preventing vibration along the longitudinal area of the superstructure should be considered by increasing the shear and strut stiffness of the superstructure. To achieve this, the following measures are recommended;
    - Superstructure side wall can be vertically aligned,
    - The internal longitudinal bulkhead can be set up with more than four (4) tiers of superstructure,
    - Strong girders or other strong elements can be provided under the main deck,
    - The transverse bulkhead and the front bulkhead of superstructure can be vertically aligned as much as possible, otherwise large connection brackets should be provided,
    - The superstructure aft bulkhead of each superstructure deck can be aligned vertically with the main hull transverse bulkheads as far as possible, otherwise strong beams under the main deck should be provided.
    - To control vibration of outfitting, dimensions and the means of fixing and strengthening at the point of mounting can be considered.
    - To prevent vibration of high web girder, the following should be considered;
        - Increase dimension of longitudinals and face plate,
        - Increase the stiffness of face plate stiffeners,
        - Add horizontal stiffener.

F) Anti-vibration installation design

- Sources of vibration (engines, fans, rotating equipment), to the extent possible, should be isolated from work and living spaces (use of isolation mounts or other means can be considered).

- Hull borne vibration in living and work areas can be attenuated by the provision of vibration absorbing deck coverings or by other means.

4.5 Noise Design

4.5.1 Aims

- Following a review of IMO Res. MSC.337(91) Code on Noise Levels On Board Ships, the structural arrangements to minimize noise in spaces normally occupied or manned by shipboard personnel should be considered.

- A space may be considered as being 'normally occupied' or 'manned' when it is routinely occupied for a period of 20 minutes or more.

4.5.2 Application

- The recommendations presented in this section are applicable to vessels covered by SOLAS Regulation II-1/3-10.

No. 132 (cont)

4.5.3 Locations

- Locations in which noise should be minimized include the following;

- Living quarters (accommodation, recreation, offices, dining)
- Work Areas (such as control rooms, bridge, machinery spaces, living quarters and offices)

4.5.4 Structural Arrangements

Allowance should be made for the following ergonomic recommendations during structural design and construction as appropriate.

A) General

- Sources of noise (engines, fans, rotating equipment), to the extent possible, should be isolated and located away from work and living spaces (through use of isolation mounts or other means).

- If necessary hull borne noise transmitted through the steel structure may be attenuated by the provision of noise absorbing deck coverings.

- Noise for typical underway conditions should be specified for the following areas:

    - In living quarters
    - In open engineering and mechanical spaces
    - In offices, the bridge, engineering offices

- Noise on the hull from the propeller tips, athwart thrusters, or azipods should be designed to minimize structure borne noise to accommodations and work areas.

- Specific noise levels are to be obtained from the revised IMO Code on Noise Aboard ships (Resolution MSC.337(91)).

- To reduce noise transmitted to accommodation cabins, the crew accommodations areas are usually arranged in the middle or rear of the superstructure or on the poop deck and above.

B) Noise sources and propagation

- Ship noise can be divided into airborne noise and structure borne noise according to the nature of the sound source. It consists of main machinery noise, auxiliary machinery noise, propeller noise, hull vibration noise and ventilation system noise.

- There are three main routes of transmission of ship noise;

    - airborne noise radiated directly to the air by main or auxiliary machinery system;
    - structure borne noise spread along the hull structure through mechanical vibration and radiated outward;
    - fan noise and air-flow noise transmitted through the pipeline of the ventilation system.

C) Mechanical vibration induced noise control

No. 132 (cont)

- Mechanical vibrations are the largest source of noise. Methods relating to anti-vibration design in the structural arrangements are also useful for vibration induced noise control, including the following;

- Reducing the noise level of the various noise sources;
- Using vibration isolator for main and auxiliary machinery to reduce the noise;
- Improving the machine's static and dynamic balance;
- Installing soundproof cover with sound-absorbing lining for machines.

D) Noise control of ventilation system

- Fans with relative low pressure may be used to reduce noise when the flow resistance of ventilation ducts is low. Low flow resistance can be achieved by rational division of the ventilation system, reasonable determination of ability of ventilation and the ducts layout, adoption of reasonable duct type and provision of suitable materials.

- Fans and central air conditioners may be installed in a separate acoustic room or the damper elastomeric gasket or silencer box.

- Ventilation ducts can be encased in damping material if necessary. Penetration of compartments with a low-noise requirement by main air tubes may be avoided.

- Ventilation inlet, outlet, and diffuser elements can be provided that are designed for noise abatement to reduce ventilation terminal noise.

- If needed, an appropriate muffler can be used based on the estimated frequency range of the noise.

E) Noise Prevention/Mitigation

- The statements that follow should be considered in the context of the prevention and mitigation of human whole body vibration, which also have a noise reducing effect.

- Different treatments may be needed to reduce airborne sources, structureborne sources, airborne paths, structureborne paths, HVAC induced noise, etc. Each treatment type depends on an understanding of the prevailing airborne or structureborne noise components (e.g., low frequency or high frequency). A thorough understanding of the source, amount of noise, the noise's components, and the noise's path(s) is essential for cost effective noise abatement/treatment. Listed below, are summarized some of the more common noise control treatment methods,

    - Selection of equipment that by its design or quality are lower noise and/or vibration.
    - Reduction of vibration by mechanically isolating machinery from supporting structure.
    - Use of two layers of vibration isolation mounts under machinery with seismic based mounts between the machinery and the ship's structure.
    - Reduce vibration energy in structures. Pumpable material used as ballast can also be used as damping in voids and tanks.
    - An air bubble curtain can be considered to shield the vessel's hull from water borne noise.
    - A decoupling material can be applied to the exterior (wet side) plating in order to reduce the radiation efficiency of the structure.

No. 132 (cont)

- The airborne source level and airborne path are the most critical factors affecting noise within a machinery space itself and in the compartments directly adjacent to the machinery space. Structureborne sources and the structureborne path carry acoustical energy everywhere else on the vessel.

- Depending on the level of treatment, secondary structureborne noise (a combination of the airborne source level and the response of the structure inside the machinery space itself) may also be important in spaces remote from the machinery itself.

F) Noise modelling

- A technique becoming more common among designers is noise or acoustical modelling. In these models, it is essential that the factors related to the source-path receiver be very well understood.

- Noise/acoustical models should include the following components:

  - Source, acoustic path, and receiver space description
  - Sources - machinery source descriptions (e.g., noise and vibration levels, size and mass, location, and foundation parameters)
  - Sources - propulsor source description (e.g., number of propellers (impellers), number of blades, RPM, clearance between hull and tips of propeller, vessel design speed)
  - Sources – HVAC source description (e.g., fan parameters (flow rate, power, and pressure), duct parameter, louver geometry, and receiver room sound absorption quality)
  - Path - Essential parameters for sound path description include hull structure sizes and materials, (damping) loss factors, insulation and joiner panel parameters.
  - Receiver - Receiver space modelling is characterized by the hull structure forming the compartment of interest, insulation/coatings, and joiner panels.

4.6 Access & Egress Design

4.6.1 Aims

- Following a review of IMO Resolution MSC.296(87), the design of stairs, vertical ladders, ramps, walkways and work platforms used for permanent means of access and/or for inspection and maintenance operations should be considered.

- Following a review of IMO Resolution MSC.296(87), the structural arrangements to facilitate emergency egress of inspection personnel or ships' crew from tanks, holds, voids etc. is to be considered.

4.6.2 Application

- The recommendations presented in this section are applicable to vessels covered in SOLAS Regulation II-1/3-10.

4.6.3 Locations

- Locations for provision of access aids in manned spaces should be provided permanently and include the following;

- Living quarters (accommodation, recreation, offices, dining)

No. 132 (cont)

- Work Areas (control rooms, bridge, machinery spaces, offices, spaces and voids entered)
- Access to deck areas, muster stations, work platforms associated to periodic inspection, operation, or maintenance
- Locations for access in infrequently manned spaces may be temporary and include the following;
  - Tanks, small holds, infrequently occupied closed spaces

4.6.4 Structural Arrangements

A) Stairs

General Principles

The following are general recommendations to consider for stairs design:

- Stairs are appropriate means for changing from one walking surface to another when the change in vertical elevation is greater than 600 mm (23.5 in.).
- Stairs should be provided in lieu of ladders or ramps in accommodations spaces, office spaces, or to the navigation bridge.
- The angle of inclination should be sufficient to provide the riser height and tread depth that follows, a minimum angle of 38 degrees and maximum angle of 45 degrees is recommended.
- Stairs exposed to the elements should have additional slip resistance due to potential exposure to water and ice.
- Stairs should be used in living quarters instead of inclined ladders.
- No impediments or tripping hazards should intrude into the climbing spaces of stairs (for example, electrical boxes, valves, actuators, or piping).
- No impediments or tripping hazards should impede access to stair landings (for example, piping runs over the landing or coamings/retention barriers).
- Stairs running fore and aft in a ship are preferable but athwartship stairs are allowed.

Stair Landings

The following are recommendations to consider during the design of stair landings:

- A clear landing at least as wide as the tread width and a minimum of 915 mm (36 in.) long should be provided at the top and bottom of each stairway.
- An intermediate landing should be provided at each deck level serviced by a stair, or a maximum of every 3500 mm (140 in.) of vertical travel for stairs with a vertical rise of 6100 mm (240 in.).
- Any change of direction in a stairway should be accomplished by means of an intermediate landing at least as wide as the tread width and a minimum of 915 mm (36 in.) long.
- Stairways should have a maximum angle of inclination from the horizontal of 45 degrees.
- Where stairs change directions, intermediate landings along paths for evacuating personnel on stretchers should be 1525 mm (60 in.) or greater in length to accommodate rotating the stretcher.

Stair Risers and Treads

The following are recommendations to consider during the design of stair risers and treads:

No. 132 (cont)

- A riser height should be no more than 230 mm (9 in.) and a tread depth of 280 mm (11 in.), including a 25 mm (1 in.) tread nosing (step overhang).
- For stairs the depth of the tread and the height of riser should be consistent
- Minimum tread width on one-way (where there is expected to be only one person transiting, ascending *or* descending stairway) stairs should be at least 700 mm (27.5 in.)
- Minimum tread width on two-way (where there may be two persons, ascending *and* descending, or passing in opposite directions) stairs should be at least 900 mm (35.5 in.)
- Once a minimum tread width has been established at any deck in that stair run, it should not decrease in the direction of egress
- Nosings should have a non-slip/skid surface that should have a coefficient of friction (COF) of 0.6 or greater measured when wet.

Headroom

- Clear headroom (free height) maintained in all stairs is recommended to be at least 2130 mm (84 in.).

Design Load

- It is recommended that stairways should be built to carry five times the normal anticipated live load, but less than a 544-kg (1000-lb) moving concentrated load.

Stair Handrails

The following are recommendations to consider during the design of stair risers and treads:

- Stairs with three or more steps should be provided with handrails.
- A single-tier handrail to maintain balance while going up or down the stairs should be installed on the bulkhead side(s) of stairs.
- A two-tier handrail to maintain balance and prevent falls from stairs should be installed on non-enclosed sides of stairs.
- Handrails should be constructed with a circular cross section with a diameter of 40 mm (1.5 in.) to 50 mm (2.0 in.).
- Square or rectangular handrails should not be fitted to stairs.
- The height of single tier handrails should be 915 mm (36 in.) to 1000 mm (39 in.) from the top of the top rail to the surface of the tread.
- Two-tier handrails should be two equally-spaced courses of rail with the vertical height of the top of the top rail 915 mm (36 in.) to 1000 mm (39 in.) above the tread at its nosing.
- A minimum clearance of 75 mm (3 in.) should be provided between the handrail and bulkhead or other obstruction.

B) Walkways and Ramps

General Principles

The following are general recommendations to consider for walkways and ramps:

- Guard rails should be provided at the exposed side of any walking or standing surface that is 600 mm (23.5 in.) or higher above the adjacent surface and where a person could fall from the upper to the lower surface.
- Ramps should be used with changes in vertical elevations of less than 600 mm (23.5 in.).

No. 132 (cont)

- Ramps should be provided with a non-skid surface that should have a coefficient of friction (COF) of 0.6 or greater measured when wet.
- Headroom in all walkways should be ≥ 2130 mm (84 in.).
- Toeboards should be provided on elevated walkways, platforms, and ramps. No impediments or tripping hazards should intrude into the transit space (for example, electrical boxes, valves, actuators, or piping).
- No impediments or tripping hazards should impede use of a walkway or ramp (for example, piping runs, hatch covers, deck impediments (e.g., through bolts) or combings/retention barriers).
- The maximum opening in a walkway grating under which the presence of persons is expected should be less than 22 mm (0.9 in.).
- The maximum opening in a walkway grating under which the presence of persons is not expected should be less than 35 mm (1.7 in.).
- Toeboards should have a height of 100 mm (4.0 in.) and have no more than a 6 mm (0.25 in.) clearance between the bottom edge of the toeboard and the walking surface.

C) Vertical Ladders

General Principles

The following are general recommendations to consider for the design of vertical ladders:

- Vertical ladders should be provided whenever operators or maintainers must change elevation abruptly by more than 300 mm (12.0 in.).
- Vertical ladders should not be located within 1.83 m (6 ft.) of other nearby potential fall points (including the deck edge, cargo holds and lower decks) without additional fall protection, such as guardrails.
- Vertical ladders should be provided with skid/slip resistant on the rungs that should have a coefficient of friction (COF) of 0.6 or greater measured when wet.
- The angle of inclination for vertical ladders should be 80 to 90 degrees.
- Permanent vertical ladders should be attached to a permanent structure.
- The maximum distance from the ladder's centreline to any object that must be reached by personnel from the ladder should not exceed 965 mm (38.0 in.).
- Vertical ladders should be located so as not to interfere with the opening and closing of hatches, doors, gratings, or other types of access.
- No impediments should intrude into the climbing space (for examples, electrical boxes, valves, actuators, or piping).
- Overhead clearance above vertical ladder platforms should be a minimum of 2130 mm (84.0 in.)
- There should be at least 750 mm (29.5 in.) clearance in front of the ladder (climbing space).
- There should be between 175 mm (7.0 in.) to 200 mm (8.0 in.) clearance behind the ladder (toe space).
- A means of access to a cellular cargo space should be provided using staggered lengths of ladder. No single length is to exceed 6.0 m (91.5 ft) in length.

Rung Design

- Rungs should be equally spaced along the entire height of the ladder.
- If square bar is used for the rung, it should be fitted to form a horizontal step with the edges pointing upward.
- Rungs should also be carried through the side stringers and attached by double continuous welding.
- Ladder rungs should be arranged so a rung is aligned with any platform or deck that an operator or maintainer will be stepping to or from.

No. 132 (cont)

- Ladder rungs should be slip resistant or of grid/mesh construction.

Provision of Platforms

- When the height of a vertical ladder exceeds 6.0 m (19.5 ft), an intermediate or linking platform should be used.
- If a work task requires the use of two hands, working from a vertical ladder is not appropriate. The work area should be provided with a work platform that provides a flat, stable standing surface.

Vertical ladders as Means of Access

- Where vertical ladders lead to manholes or passageways, horizontal or vertical handles or grab bars should be provided. Handrails or grab bars should extend at least 1070 mm (42.0 in.) above the landing platform or access/egress level served by the ladder.

Safety Cages

- Safety cages should be used on vertical ladders over 4.5 m (15.0 ft) in height.
- Climber safety rails or cables should be used on vertical ladders in excess of 6.1 m (20.0 ft).

D) Work Platforms

General Principles

- Work platforms should be provided at locations where personnel must perform tasks that cannot be easily accomplished by reaching from an existing standing surface.
- Work platforms exposed to the elements should have additional slip resistance due to potential exposure to water and ice.
- Work platforms more than 600 mm (23.5 in.) above the surrounding surface should be provided with guard rails and hand rails.
    - Work platforms should be of sufficient size to accommodate the task and allow for placement of any required tools, spare parts or equipment.

E) Egress

- Doors, hatches, or scuttles used as a means of escape should be capable of being operated by one person, from either side, in both light and dark conditions. Doors should be designed to prevent opening and closing due to vessel motion and should be operable with one hand.
- Doors (other than emergency exit) used solely by crew members should have a clear opening width of at least 710 mm (28 in.) The distance from the deck to the top of the door should be at least 1980 mm (78 in.).
- The method of opening a means of escape should not require the use of keys or tools. Doors in accommodation spaces (with the exception of staterooms), stairways, stair towers, passageways, or control spaces, should open in the direction of escape or exit.
- The means of escape should be marked from both the inside and outside.
- Deck scuttles that serve as a means of escape should be fitted with a release mechanism that does not require use of a key or a tool, and should have a holdback device to hold the scuttle in an open position.
  Deck scuttles that serve as a means of escape should have the following dimensions:
  i) Round – 670 mm (26.5 in.) or greater in diameter
  ii) Rectangular – 670 mm (26.5 in.) by 330 mm (13 in.) or greater

No. 132 (cont)

Annex A - Recommended Measurement Values

1.1 General

The recommendations in the following section outline measurement values for lighting, ventilation, vibration and access from a best practice ergonomics perspective. The information provided can assist designers when applying structural arrangement guidance.

See the IMO Code on Noise Aboard ships (IMO Resolution MSC.337(91)) for recommended shipboard noise levels guidance.

1.2 Lighting

The following tables give details of recommended illuminance levels in Lux which support task performance, safety and visual comfort for the operator. Emergency lighting is covered in SOLAS and IMO Resolutions and has not been considered in the below table. Lighting measurements should be made with the probe approximately 800 mm (32 inches).

No. 132 (cont)

Table 1 - Lighting for Crew Accommodations Spaces

Space	*Illuminance Level in Lux*	*Space*	*Illuminance Level in Lux*
Entrances and Passageways			
Interior Walkways, Passageways, Stairways and Access Ways	100	Exterior Walkways, Passageways, Stairways and Access Ways (night)	100
Corridors in Living quarters and work areas	100	Stairs, escalators	150
		Muster Area	200
Cabins, Staterooms, Berthing and Sanitary Spaces*			
General Lighting	150	Bath/Showers (General Lighting)	200
Reading and Writing (Desk or Bunk Light)	500	All other Areas within Sanitary Space (e.g., Toilets)	200
Mirrors (Personal Grooming)	500	Light during sleep periods	<30
Dining Spaces			
Mess Room and Cafeteria	300	Snack or Coffee Area	150
Recreation Spaces			
Lounges	200	Gymnasiums	300
Library	500	Bulletin Boards/Display Areas	150
Multimedia Resource Centre	300	All other Recreation Spaces (e.g., Game Rooms)	200
TV Room	150	Training/Transit Room Office/Meeting rooms	500
Medical, Dental and First Aid Centre			
Dispensary Hospital/ward	500	Wards - General Lighting - Critical Examination - Reading Hospital/ward	 150 500 300 500
Medical and Dental Treatment/ Examination Room Hospital/ward	500		
Medical Waiting Areas	200		
Laboratories	500	Other Medical & Dental Spaces	300
*Note: If there is any opportunity for light to enter cabins or staterooms at the times of day or night when people sleep (e.g., portlights, transoms, etc.), the maximum lighting levels should be 30 Lux.			

No. 132 (cont)

Table 2 - Lighting for Navigation and Control Spaces

Space	*Illuminance Level in Lux*	*Space*	*Illuminance Level in Lux*
Wheelhouse, Pilothouse, Bridge	300	Offices - General Lighting - Computer Work - Service Counters	 300 300 300
Chart Room - General Lighting - On Chart Table	 150 500		
Other Control Rooms (e.g., Cargo Transfer etc.) - General Lighting - Computer Work Central Control Room	 300 300 500	Control Stations - General Lighting - Control Consoles and Boards, Panels, Instruments - Switchboards - Log Desk Local Instrument room	 300 300 500 500 400
Radar Room	200		
Radio Room	300	Gyro Room	200

Table 3 - Lighting for Service Spaces

Space	*Illuminance Level in Lux*	*Space*	*Illuminance Level in Lux*
Food Preparation - General Lighting - Galley - Pantry - Butcher Shop - Thaw Room - Working Surfaces, Food Preparation Counter and Range Tops - Food Serving Lines - Scullery (Dishwashing) - Extract Hood Store rooms Package handling/cutting	 500 500 300 500 300 750 300 300 500 100 300	Laundries - General Lighting - Machine, Pressing, Finishing and Sorting	 300 300
		Chemical Storage	300
		Storerooms - Large Parts - Small Parts - Issue Counters	 200 300 300
		Elevators	150
		Food Storage - Non-refrigerated - Refrigerated	 200 100
Mail Sorting	500		

No. 132 (cont)

Table 4 - Lighting for Operating and Maintenance Spaces/Areas

Space	*Illuminance Level in Lux*	*Space*	*Illuminance Level in Lux*
Machinery Spaces (General) Unmanned Machinery spaces	200 200		
Engine Room	300	Cargo Holds (Portable Lighting) - General Lighting - During Cargo Handling - Passageways and Trunks	 30 300 80
Generator and Switchboard Room Switchboard, transformer room Main generator room/switch gear	300 500 200		
Fan Room HVAC room	200 200	Inspection and Repair Tasks - Rough - Medium - Fine - Extra Fine	 300 500 750 1000
Motor Room	300		
Motor-Generator Room (Cargo Handling)	150		
Pump Room, Fire pump room Steering Gear Room Windlass Rooms Battery Room Emergency Generator Room Boiler Rooms	200 200 200 200 200 100	Workshops Paint Shop Workshop office Mechanical workshop Inst/Electrical Workshop	300 750 500 500 500
Bilge/Void Spaces	75		
Muster/Embarkation Area	200	Unmanned Machinery Room	200
		Shaft Alley	100
Cargo Handling (Weather Decks) Lay Down Area General Process and Utility area Loading ramps/bays	200 200 200 200	Escape Trunks	50
		Crane Cabin	400
Cargo Storage and Manoeuvring areas	350	Hand signalling areas between crane shack and ship deck	300

No. 132 (cont)

Table 5 - Lighting for Red or Low-level White Illuminance

Area	*Illuminance Level in Lux*
Where seeing is essential for charts and instruments	1 to 20
Interiors or Spaces	5 to 20
Bridge Areas (including chart tables, obstacles and adjacent corridors and spaces)	0 to 20 (Continuously Variable)
Stairways	5 to 20
Corridors	5 to 20
Repair Work (with smaller to larger size detail)	5 to 55

Brightness (Adopted from DOT/FAA/CT-96/1 - Human Factors Design Guide).

The following table recommends the brightness ratio between the lightest and darkest areas or between a task area and its surroundings.

Table 6 - Recommended Maximum Brightness Ratios

	Environmental Classification		
Comparison	A	B	C
Between lighter surfaces and darker surfaces within the task	5 to 1	5 to 1	5 to 1
Between tasks and adjacent darker surroundings	3 to 1	3 to 1	5 to 1
Between tasks and adjacent lighter surroundings	1 to 3	1 to 3	1 to 5
Between tasks and more remote darker surfaces	10 to 1	20 to 1	b
Between tasks and more remote lighter surfaces	1 to 10	1 to 20	b
Between luminaries and adjacent surfaces	20 to 1	b	b
Between the immediate work area and the rest of the environment	40 to 1	b	b

Environmental Classification Notes:

A Interior areas where reflectances of entire space can be controlled for optimum visual conditions.

B Areas where reflectances of nearby work can be controlled, but there is only limited control over remote surroundings.

C Areas (indoor and outdoor) where it is completely impractical to control reflectances and difficult to alter environmental conditions.

b Brightness ratio control is not practical.

No. 132 (cont)

1.3 Ventilation

- Thermal comfort varies among individuals as it is determined by individual differences. Individually, perception of thermal comfort is largely determined by the interaction of thermal environmental factors such as air temperature, air velocity, relative humidity, and factors related to activity and clothing.

- The Heating, Ventilation and Air-Conditioning (HVAC) systems onboard a vessel should be designed to effectively control the indoor thermal environmental factors to facilitate the comfort of the crew.

- The following are a set of ergonomic recommendations that aim to achieve operator satisfaction from a thermal comfort perspective.

A) Recommended Air temperature

- A Heating, Ventilation, and Air Conditioning (HVAC) system should be adjustable, and temperatures should be maintained by a temperature controller. The preferred means would be for each manned space to have its own individual thermostat for temperature regulation and dehumidification purpose.

- International Standards recommend different bands for a HVAC system, but there is little difference in the minimum and maximum values they stipulate. A band width between 18°C (64°F) and 27°C (80°F) accommodates the optimum temperature range for indoor thermal comfort.

B) Recommended Relative humidity

- A HVAC system should be capable of providing and maintaining a relative humidity within a range from 30% minimum to 70% maximum with 40 to 45% preferred.

C) Enclosed space vertical gradient recommendation

- The difference in temperature at 100 mm (4 in.) above the deck and 1700 mm (67 in.) above the deck should be maintained with 3°C (6°F).

D) Recommended Air velocity

- Air velocities should not exceed 30 metres-per-minute or 100 feet-per-minute (0.5 m/s or 1.7 ft/s) at the measurement position in the space.

E) Berthing Horizontal Temperature Gradient

- In berthing areas, the difference between the inside bulkhead surface temperature adjacent to the berthing and the average air temperature within the space should be less than 10°C (18°F).

F) Air exchange rate

- The rate of air exchange for enclosed spaces should be at least six (6) complete changes-per-hour.

No. 132 (cont)

Summary of Indoor Climate Recommendations

Item	*Recommendation or Criterion*
Air Temperature	18 to 27°C (68 to 77°F)
Relative Humidity	The HVAC system should be capable of providing and maintaining a relative humidity within a range from 30% minimum to 70% maximum
Vertical Gradient	The acceptable range is 0 – 3°C (0 – 6°F)
Air Velocity	Not exceed 30 meters-per-minute or 100 feet-per-minute
Horizontal Gradient (Berthing areas)	The horizontal temperature gradient in berthing areas should be <10°C (18°F)
Air Exchange Rate	The rate of air change for enclosed spaces should be at least six (6) complete changes-per-hour

1.4 Vibration

- Vibration comfort varies among individuals as it is determined by individual differences. Individually, perception of vibration comfort is determined by the magnitudes and frequencies of those vibrations.

- The following are recommendations aiming to control levels of whole body vibration exposure that are generally not considered to be uncomfortable, and these are based on the recommendations of ISO 6954 (2000).

- The following levels of whole body vibrations should not be exceeded when measured in three axes (x, y, and z) using the w weighting scale (whole body, as discussed in ISO 6954:2000) with a band limitation in all axes limited from 1 to 80 hz.

Maximum RMS vibration levels	
Accommodations Areas	Workspaces
180 mm/second^2 (5 mm/s)	215 mm/second^2 (6 mm/s)

1.5 Access

- The following provide further ergonomic guidance on access arrangements to support the recommendations given in Section 4.6 Access & Egress Design, with a view to covering wider scope than those covered by the mandatory requirements such as SOLAS Regulation II-1/3-6 and IACS UI SC191.

- The measurements hereunder are based on one of recognised practices for ergonomic design with a view to providing general guidance to cover not only means of access for inspections but also means of access for operation. Therefore, they are not necessarily identical to those specified in the mandatory requirements.

No. 132 (cont)

Stair Handrail

In addition to the recommendations for Stair Handrails presented in Section 4.6 Access & Egress Design, the following recommended dimensions relating to the design of Stair Handrails are presented in the following table. Stairs with three or more steps should be provided with handrails.

Stair Handrail Arrangements

Arrangement	*Handrail Recommendation*
1120 mm (44 in.) or wider stair with bulkhead on both sides	Single tier handrail on both sides
Less than 1120 mm (44 in.) stair width with bulkhead on both sides	Single tier handrail on one side, preferably on the right side descending
1120 mm (44 in.) or wider stair, one side exposed, one with bulkhead	Two tier handrail on exposed side, single tier on bulkhead side
Less than 1120 mm (44 in.) stair width, one side exposed, one with bulkhead	Two tier handrail on exposed side
All widths, both sides of stairs exposed	Two tier handrail on both sides

No. 132 (cont)

Walkway and Ramp Design

In addition to the recommendations for Walkway Design presented in Section 4.6 Access & Egress Design, the following recommended dimensions relating to the design of walkways and ramps are presented in Figure 1 'Walkway and Ramp Design'.

Figure 1 Walkway and Ramp Design

Dimension		*Recommendations*
A	Walkway width – one person[2]	≥ 710 mm (28 in.)
	Walkway width – two-way passage, or means of access or egress to an entrance	≥ 915 mm (36 in.)
	Walkway width – emergency egress, unobstructed width	≥ 1120 mm (44 in.)
B	Distance behind handrail and any obstruction	≥ 75 mm (3.0 in.)
C	Gaps between two handrail sections or other structural members	≤ 50 mm (2.0 in.)
D	Span between two handrail stanchions	≤ 2.4 m (8 ft)
E	Outside diameter of handrail	≥ 40 mm (1.5 in.) ≤ 50 mm (2.0 in.)
F	Height of handrail	1070 mm (42.0 in.)
G	Height of intermediate rail	500 mm (19.5 in.)
H	Maximum distance between the adjacent stanchions across handrail gaps	≤ 350 mm (14.0 in.)
I	Distance below any covered overhead structure or obstruction	≥ 2130 mm (84 in.)
Θ	Ramp angle of inclination – unaided materials handling	≤ 5 degrees
	Ramp angle of inclination – personnel walkway	≤ 15 degrees

Notes:
1 Toeboard omitted for clarity
2 The walkway width may be diminished to ≥ 500 mm around a walkway structure web frames

■

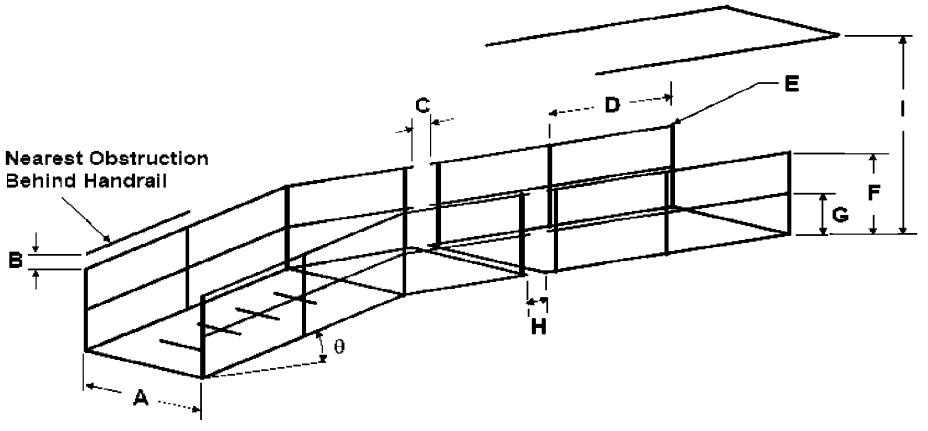

No. 132 (cont)

Vertical Ladder Design and Dimensions

In addition to the recommendations for Vertical Ladders presented in Section 4.6 Access & Egress Design, the following recommended dimensions relating to the design of Ladders are presented in Figure 2 to Figure 5.

- Figure 2 – Vertical Ladders (General Criteria)
- Figure 3 – Staggered Vertical Ladders
- Figure 4 – Vertical Ladders to Landings (Side Mount)
- Figure 5 – Vertical Ladders to Landings (Ladder through Platform)

Figure 2 Vertical Ladders (General Criteria)

Dimension		*Recommendation*
A	Overhead Clearance	2130 mm (84.0 in.)
B	Ladder distance (gap accommodating toe space) from surface (at 90 degrees)	≥ 175 mm (7.0 in.) ≤ 200 mm (8.0 in.)
C	Horizontal Clearance (from ladder face and obstacles)	≥ 750 mm (29.5 in.) or ≥ 600 mm (23.5 in.) (in way of openings)
D	Distance between ladder attachments / securing devices	≤ 2.5 m (8.0 ft)
E	Ladder angle of inclination from the horizontal	80 to 90 degrees
F	Rung Design – (Can be round or square bar; where square bar is fitted, orientation should be edge up)	Square bar 25 mm (1.0 in.) x 25 mm (1.0 in.) Round bar 25 mm (1.0 in.) diameter
G	Distance between ladder rungs (rungs evenly spaced throughout the full run of the ladder)	≥ 275 mm (11.0 in.) ≤ 300 mm (12.0 in.)
H	Skew angle	≤ 2 degrees
I	Stringer separation	400 to 450 mm (16.0 to 18.0 in.)
J	Ladder height: Ladders over 6 m (19.7 ft) require intermediate/linking platforms)	≤ 6.0 m (19.5 ft)

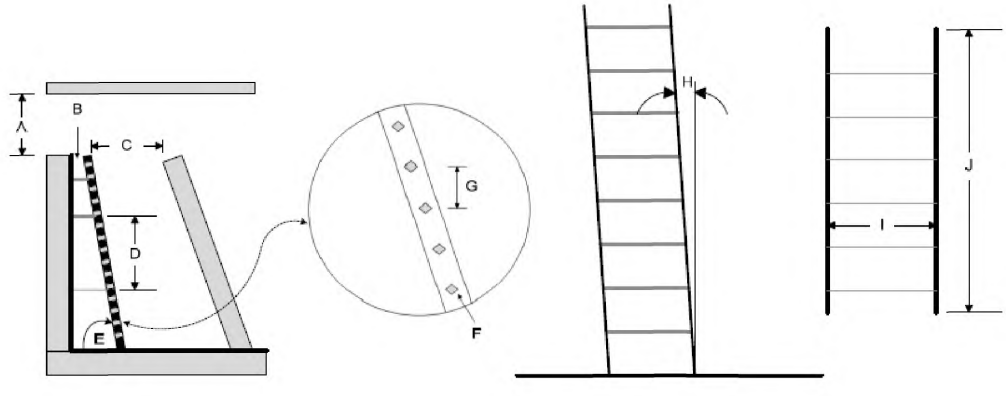

No. 132 (cont)

Figure 3 Staggered Vertical Ladders

Dimension		*Recommendation*
A	Stringer separation	400 to 450 mm (16.0 to 18.0 in.)
B	Horizontal separation between two vertical ladders, stringer to stringer	≥ 225 mm (9 in.) ≤ 450 mm (18 in.)
C	Distance between ladder rungs (rungs evenly spaced throughout the full run of the ladder)	≥ 275 mm (11.0 in.) ≤ 300 mm (12.0 in.)
D	Stringer height above landing or intermediate platform	≥ 1350 mm (53.0 in.)
E	Rung design – (Can be round or square bar; where square bar is fitted, orientation should be edge up)	Square bar 22 mm (0.9 in.) x 22 mm (0.9 in.) Round bar 25 mm (1.0 in.) diameter
F	Horizontal separation between ladder and platform	≥ 150 mm (6.0 in.) ≤ 300 mm (12.0 in.)
G	Landing or intermediate platform width	≥ 925 mm (36.5 in.)
H	Platform ladder to Platform ledge	≥ 75 mm (3.0 in.) ≤ 150 mm (6.0 in.)

*Note: Left side guardrail of platform omitted for clarity.

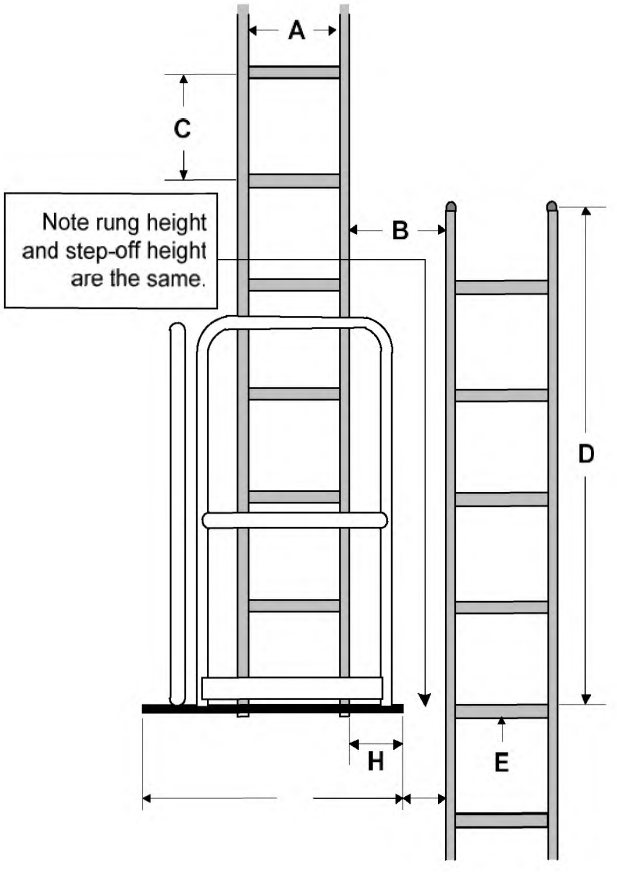

No. 132 (cont)

Figure 4 Vertical Ladders to Landings (Side Mount)*

Dimension		*Recommendation*
A	Platform depth	≥ 750 mm (29.5 in.)
B	Platform width	≥ 925 mm (36.5 in.)
C	Ladder distance from surface	≥ 175 mm (7.0 in.)
D	Horizontal separation between ladder and platform	≥ 150 mm (6.0 in.) and ≤ 300 mm (12.0 in.)

* Notes: Top view. Guardrails/Handrails not shown.

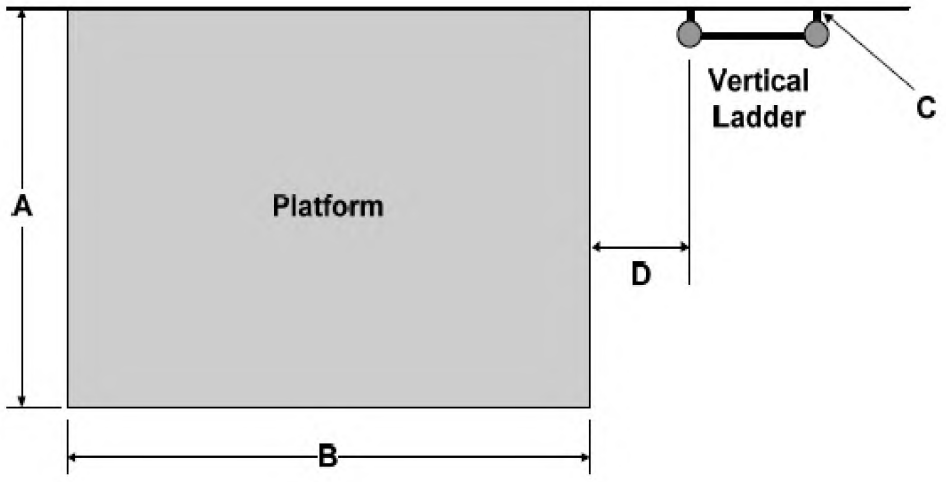

No. 132 (cont)

Figure 5 Vertical Ladders to Landings (Ladder through Platform)*

Dimension		*Recommendation*
A	Vertical ladder opening	≥ 750 mm (29.5 in.)
B	Distance from front of vertical ladder to back of platform opening	≥ 750 mm (29.5 in.)
C	Minimum clear standing area in front of ladder opening – Depth	≥ 750 mm (29.5 in.)
D	Minimum clear standing area in front of ladder opening – Width	≥ 925 mm (36.5 in.)
E	Additional platform width for intermediate landing (where present)	≥ 925 mm (36.5 in.)
F	Horizontal separation between ladder and platform	≥ 150 mm (6.0 in.) and ≤ 300 mm (12.0 in.)

*Notes: Top view. Guardrails/Handrails not shown.

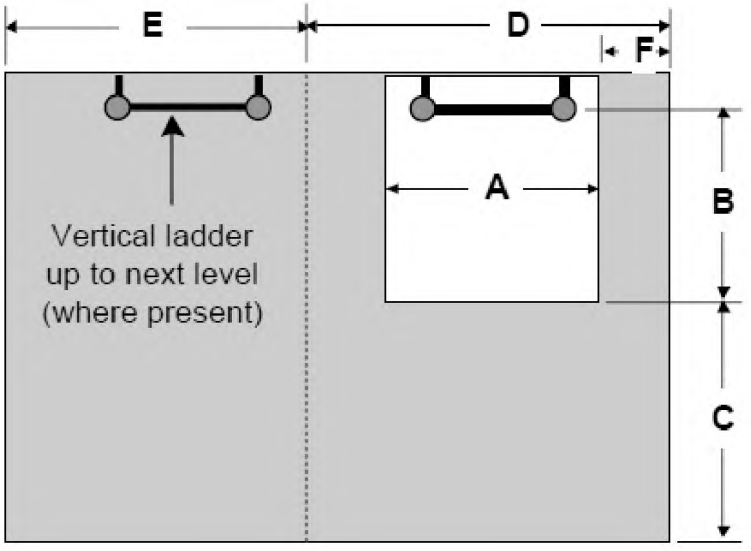

No. 132 (cont)

Work Platform

In addition to the recommendations for Work Platforms presented in Section 4.6 Access & Egress Design, the following recommended dimensions relating to the design of Work Platforms are presented in Figure 6 'Work Platform Dimensions'.

Figure 6 Work Platform Dimensions

Dimension		*Recommendation*
A	Work platform width	≥ 750 mm (29.5 in.)
	Work platform width (if used for standing only)	≥ 380 mm (15.0 in.)
B	Work platform length	≥ 925 mm (37.0 in.)
	Work platform length (if used for standing only)	≥ 450 mm (18.0 in.)

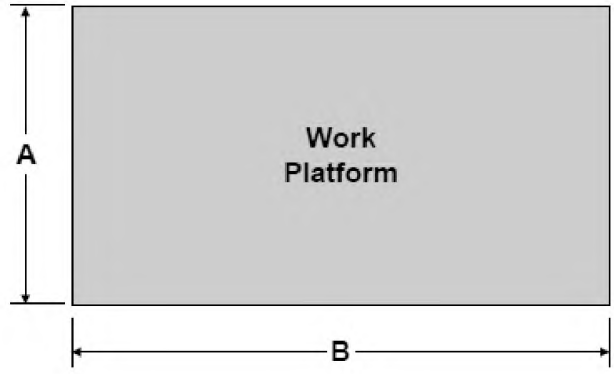

No. 132 (cont)

Annex B - Relevant Standards, Guidelines and Practices

This Annex presents a list of standards and guidance documents used by industry in relation to lighting, ventilation, vibration, noise and access in the context of their effects on human working onboard ships.

2.1 Lighting

- ASTM F1166 2007 Standard Practice for Human Engineering Design for Marine Systems, Equipment and Facilities
- IESNA RP-12-97, Recommended Practice for Marine Lighting
- ISO 8995:2000 (CIES 008/E), Lighting of indoor work places
- ILO Maritime Labour Convention
- JIS F 8041: Recommended Levels of illumination and Methods of illumination Measurement for Marine Use

2.2 Ventilation

- ANSI/ASHRAE (15) (2010). Practices for Measuring, Testing, Adjusting, and Balancing Shipboard HVAC&R Systems
- ANSI/ASHRAE 55a, (2010). Thermal environmental conditions for human occupancy
- ANSI/ASHRAE 62.1 (2010) Ventilation for Acceptable Indoor Air Quality
- ISO 7547:2008 Ships and marine technology – Air-conditioning and ventilation of accommodation spaces – Design conditions and basis of calculations
- ISO 7726 (E), (1998), Ergonomics of the thermal environment – Instruments for measuring physical quantities

2.3 Vibration

- ISO 2631-1:1997, Mechanical Vibration and Shock – Evaluation of Human Exposure to Whole Body Vibration – Part 1: General Requirements
- ISO 2631-2:2003, Mechanical Vibration and Shock – Evaluation of Human Exposure to Whole Body Vibration – Part 2: Vibration in Buildings.
- ISO 6954:2000, Mechanical Vibration and Shock – Guidelines for the Measurement, Reporting and Evaluation of Vibration with Regard to Habitability on Passenger and Merchant Ships.
- ISO 8041:2005, Human response to vibration – Measuring instrumentation.

2.4 Noise

- IMO Resolution MSC.337(91), Code on Noise Levels on Board Ships
- IMO Resolution A.468(XII), Code on Noise Levels on Board Ships

No. 132 (cont)

2.5 Access

- American Society for Testing and Materials (ASTM) F1166 2007 Standard Practice for Human Engineering Design for Marine Systems, Equipment and Facilities
- IACS (2002). Recommendation No. 78 – Safe Use of Portable Ladders for Close-up Surveys
- IACS (2005). Recommendation No. 90 – Ship Structure Access Manual
- IACS (1992). Recommendation No. 91 – Guidance for Approval/Acceptance of Alternative Means of Access
- IACS, Unified Interpretations (UI) SC191 for the application of amended SOLAS regulation II-1/3-6 (IMO Resolution MSC.151 (78)) and revised Technical provisions for means of access for inspections (IMO Resolution MSC.158 (78))
- IMO Maritime Safety Committee Resolution MSC.133 (76) Adoption of Amendments to the Technical Provisions for Means of Access for Inspections
- IMO Maritime Safety Committee Resolution MSC.134 (76) Adoption of Amendments to the International Convention for the Safety of Life At Sea
- IMO Maritime Safety Committee Resolution MSC.158 (78) (adopted 20 May 2004), Amendments to the Technical Provisions for Means of Access for Inspections

End of Document

gost.e-ecolog.ru